NACA RM E56E09a

NACA

CASE FILE
COPY

RESEARCH MEMORANDUM

AN ANALOG STUDY OF A SHOCK-POSITION DIFFUSER CONTROL ON A SUPERSONIC TURBOJET ENGINE

By David Novik

Lewis Flight Propulsion Laboratory
Cleveland, Ohio

NATIONAL ADVISORY COMMITTEE
FOR AERONAUTICS
WASHINGTON

August 17, 1956
Declassified May 16, 1958

NATIONAL ADVISORY COMMITTEE FOR AERONAUTICS

RESEARCH MEMORANDUM

AN ANALOG STUDY OF A SHOCK-POSITION DIFFUSER CONTROL ON A SUPERSONIC TURBOJET ENGINE

By David Novik

4084

SUMMARY

The effects of diffuser dynamics (for supercritical diffuser operation) and controlled engine dynamics on the diffuser control requirements of a supersonic turbojet engine were studied with the aid of an electronic analog. The investigation indicated that a pressure disturbance in the diffuser had only a small effect on engine speed, whereas a disturbance in engine speed had a large effect on diffuser pressure and could impose severe requirements on diffuser control response.

The controlled diffuser response was found to be a function only of the diffuser and diffuser control dynamics (independent of the engine response). When measured by its ability to attenuate a pressure disturbance resulting from a change in engine speed setting, the controlled diffuser response improved with faster servomotor response, smaller diffuser dead times, and smaller diffuser lags. The effect of diffuser dead time on diffuser response was greater than the effect of diffuser lag.

INTRODUCTION

When considered as an individual component, a supersonic inlet diffuser or a turbojet engine has independent air-flow characteristics. A combination of the engine and supersonic diffuser is therefore based on the matching of the air-flow characteristics, usually in such a manner that diffuser recovery is near maximum (and its drag near minimum) at or near the design flight Mach number. However, operation at other than design conditions requires a variable-geometry diffuser in order that efficient diffuser operation be maintained at the air-flow requirements set by the engine.

Variable diffuser geometry, such as obtainable by means of an adjustable spike or a variable bypass, requires some form of a diffuser control. It is the purpose of this report to indicate some of the response requirements imposed upon a diffuser control by virtue of diffuser

dynamics and controlled turbojet-engine dynamics. A shock-position control operating a variable diffuser bypass was selected for investigation. Data for this investigation were obtained by simulating a controlled supersonic turbojet engine (the combination of the supersonic diffuser and the turbojet engine) on an electronic analog and by subjecting the system to step disturbances in engine speed settings and in diffuser shock position (pressure) settings.

SYMBOLS

4084

A	area
A_b	bleed area (bypass door)
C	constant for choked flow $= \frac{w_b\sqrt{T}}{AP}$
f	function
G	gain
k,k_1	constants
l	slope $\frac{w_f}{\delta\sqrt{\theta}} \Big/ \frac{N}{\sqrt{\theta}}$
m	slope $\frac{w_e\sqrt{\theta}}{\delta} \Big/ \frac{N}{\sqrt{\theta}}$
N	engine speed
P	total pressure at diffuser exit
p	static pressure at diffuser exit
p_0	ambient static pressure
s	Laplace operator
T	total temperature at diffuser exit
t_D	dead time
w_b	air flow through diffuser bypass door
w_e	engine air flow

w_f engine fuel flow

γ ratio of specific heats

δ ratio of compressor-inlet (diffuser-exit) total pressure to NACA standard sea-level pressure

θ ratio of compressor-inlet (diffuser-exit) total temperature to NACA standard sea-level temperature

τ time constant

τ_{id} integrator time constant, diffuser control

τ_{ie} integrator time constant, engine control

ω_n servomotor natural frequency

Subscripts:

d diffuser

e engine

s servomotor

ANALOG SIMULATION OF SUPERSONIC TURBOJET

The supersonic turbojet engine considered in this analog investigation was assumed to consist of a representative turbojet engine with control of engine speed, cascaded with a supersonic diffuser in which the desired shock location was maintained by control action on a bypass door (fig. 1). It was assumed that diffuser operation was supercritical at all times.

Simulation of Turbojet Engine and Control

A block diagram of the analog simulation of the controlled turbojet engine is shown in figure 2. The turbojet engine was assumed to be analogous to a simple first-order lag with respect to the response of engine speed to a change in fuel flow. The engine control was assumed to be a speed - fuel-flow control in which any speed deviation from the speed setting would result in proportional-plus-integral action on the fuel flow. A loop gain of 5 to 8 was selected as being representative of optimum gain for a controlled turbojet engine (refs. 1 and 2). Loop

gain, as referred to in this report, is defined as the product of the frequency invariant parts of the gain terms within a given closed-loop system.

Simulation of Supersonic Diffuser and Diffuser Control

The supersonic diffuser was assumed to have a shock-position control in which the sharp rise in static pressure, as the shock moves across a preselected pressure tap, was used to provide an actuating signal for operation of a bypass door near the diffuser exit (ref. 3). The bypass door was assumed to be operated by a second-order servomotor, the input of which was determined from proportional-plus-integral action on the pressure error. The dynamics of the diffuser (response of control pressure to door position) were assumed to consist of a lag in series with a dead time. These dynamic characteristics are inferred from the dead time and lead-lag characteristics of a supercritically operated ram-jet engine (refs. 4 and 5) in which the lead term may be attributed to combustion, thereby leaving a cascaded dead time and lag as representative of the diffuser. The lag may be likened to the filling time of the diffuser, and the dead time is equivalent to the time required for a pressure wave to travel upstream from the point of disturbance to the control pressure tap.

In the analog simulation it was convenient, and not necessarily unrealistic, to set the dead time equal to the time constant of the lag. The analog hookup for the simulation of combined dead time and lag is shown in figure 3, and the response of this simulation to a step input is shown in figure 4.

The simulation of the controlled diffuser is shown in figure 5. The diffuser gain and bypass-door gain were lumped into the control gain, so that the control gain multiplied by the second-order servomotor gain (0.41) represents the loop gain of the controlled diffuser system.

Simulation of Complete Supersonic Turbojet Engine

In order to cascade the supersonic diffuser with the turbojet engine, it is necessary to know how changes in diffuser-exit pressure affect the engine speed and, in turn, how changes in engine speed affect the diffuser pressure. For evaluation of these effects, a flight condition of 50,000 feet altitude and a flight Mach number of 1.8 was assumed. At design conditions it was assumed that the bypass door would bleed off an amount of air equal to 5 percent of the engine air flow.

4084

Effect of diffuser-exit pressure on engine speed. - The engine speed is a function of two variables, diffuser-exit total pressure P and engine fuel flow w_f (for constant altitude and flight Mach number). It is desired to find the effect on engine speed of one of these variables (P) with the other variable maintained constant. The effect of diffuser-exit pressure P on engine speed N is represented by $\left.\frac{\partial N}{\partial P}\right|_{w_f}$. The partial derivative $\left.\frac{\partial N}{\partial P}\right|_{w_f}$ can be obtained from the slope of the relation of engine fuel-flow and speed for the desired conditions of operation, as indicated in sketch (a):

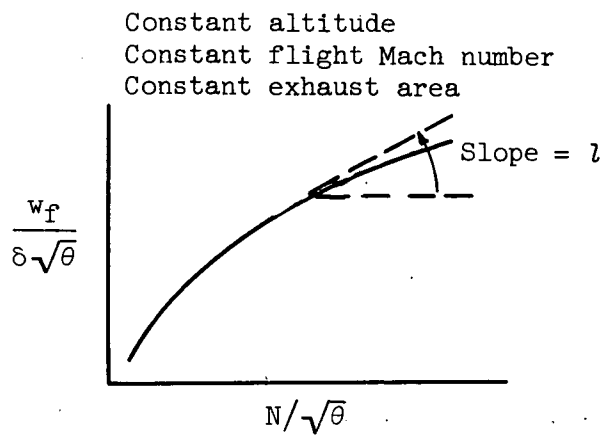

Sketch (a)

Thus,

$$\frac{w_f}{\delta\sqrt{\theta}} = f\left(\frac{N}{\sqrt{\theta}}\right)$$

and, at a given $N/\sqrt{\theta}$,

$$\frac{w_f}{\delta\sqrt{\theta}} = l\,\frac{N}{\sqrt{\theta}} + k$$

but $\delta = P/p_0$, so that

$$\frac{w_f p_0}{P\sqrt{\theta}} = l\,\frac{N}{\sqrt{\theta}} + k$$

and, at constant w_f,

$$\frac{-w_f p_0}{P^2}\,dP = l\,dN$$

Therefore,

$$\left.\frac{\partial N}{\partial P}\right|_{w_f} = \frac{-w_f p_0}{l P^2} \tag{1}$$

For the turbojet engine selected for this investigation at rated engine speed and design-point pressure recovery,

$$\left.\frac{\partial N}{\partial P}\right|_{w_f} = -0.85$$

and, in percentage,

$$\left.\frac{\frac{\partial N}{N}}{\frac{\partial P}{P}}\right|_{w_f} = -0.175 \tag{2}$$

Effect of engine speed on diffuser-exit pressure. - The gain term that relates the change in diffuser-exit pressure for a change in engine speed is taken as $\left.\frac{\partial P}{\partial N}\right|_{A_b}$, where a speed change is assumed to occur as the result of a change in fuel flow while the bleed area (bypass-door area) is maintained constant. The partial $\left.\frac{\partial P}{\partial N}\right|_{A_b}$ is obtained as follows at constant altitude and flight Mach number:

$$w_e = f(NP)$$

$$\Delta w_e = \left.\frac{\partial w_e}{\partial P}\right|_N \Delta P + \left.\frac{\partial w_e}{\partial N}\right|_P \Delta N$$

$$\frac{\Delta w_e}{\left.\frac{\partial w_e}{\partial N}\right|_N} = \Delta P + \frac{\left.\frac{\partial w_e}{\partial N}\right|_P}{\left.\frac{\partial w_e}{\partial P}\right|_N} \Delta N$$

$$\frac{-\Delta P}{\Delta N} = \frac{\left.\frac{\partial w_e}{\partial N}\right|_P}{\left.\frac{\partial w_e}{\partial P}\right|_N} - \frac{\frac{\Delta w_e}{\Delta N}}{\left.\frac{\partial w_e}{\partial P}\right|_N} \tag{3}$$

At a given flight Mach number and altitude, and assuming supercritical operation, a steady-state change in engine air flow is accompanied by an equal (and opposite) steady-state change in air flow through the diffuser bypass door. For an incremental change in engine air flow,

$$\frac{\Delta w_e}{\Delta N} = -\frac{\Delta w_b}{\Delta N}$$

Also, if it is assumed that the bypass door is choked,

$$w_b = C\frac{A_b P}{\sqrt{T}}$$

and

$$\Delta w_b = \frac{CA_b}{\sqrt{T}}\Delta P$$

so that

$$\frac{\Delta w_e}{\Delta N} = -\frac{\Delta w_b}{\Delta N} = -\frac{CA_b}{\sqrt{T}}\frac{\Delta P}{\Delta N}$$

Therefore, at constant A_b,

$$\left.\frac{-\partial P}{\partial N}\right|_{A_b} = \frac{\left.\frac{\partial w_e}{\partial N}\right|_P}{\left.\frac{\partial w_e}{\partial P}\right|_N} + \frac{\frac{CA_b}{\sqrt{T}}\frac{\Delta P}{\Delta N}}{\left.\frac{\partial w_e}{\partial P}\right|_N}$$

from which

$$\left.\frac{-\partial P}{\partial N}\right|_{A_b} = \frac{\left.\frac{\partial w_e}{\partial N}\right|_P}{\left.\frac{\partial w_e}{\partial P}\right|_N}\frac{\left.\frac{\partial w_e}{\partial P}\right|_N}{\left.\frac{\partial w_e}{\partial P}\right|_N + \frac{CA_b}{\sqrt{T}}} = \frac{\left.\frac{\partial w_e}{\partial N}\right|_P}{\left.\frac{\partial w_e}{\partial P}\right|_N + \frac{CA_b}{\sqrt{T}}} \tag{4}$$

The partials $\left.\frac{\partial w_e}{\partial N}\right|_P$ and $\left.\frac{\partial w_e}{\partial P}\right|_N$ may be taken from the steady-state engine air-flow curves as indicated in sketch (b):

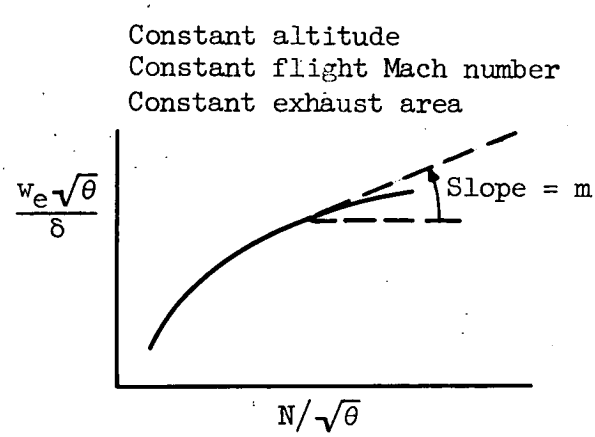

Sketch (b)

The slope

$$m = \frac{\Delta\left(\frac{w_e\sqrt{\theta}}{\delta}\right)}{\Delta\left(\frac{N}{\sqrt{\theta}}\right)} = \frac{\Delta w_e}{\Delta N}\,\frac{\theta}{\delta}$$

so that

$$\left.\frac{\partial w_e}{\partial N}\right|_P = m\,\frac{\delta}{\theta} \tag{5}$$

Also,

$$\frac{w_e\sqrt{\theta}}{\delta} = m\,\frac{N}{\sqrt{\theta}} + k_1$$

and $\delta = P/p_0$, so that

$$\frac{w_e\sqrt{\theta}}{P}\,p_0 = m\,\frac{N}{\sqrt{\theta}} + k_1$$

Inasmuch as p_0 and θ are constant (constant flight Mach number and altitude), then at constant N,

$$\frac{dw_e}{w_e} = \frac{dP}{P}$$

Therefore,

$$\left.\frac{\partial w_e}{\partial P}\right|_N = \frac{w_e}{P} \tag{6}$$

4084

From data for the engine selected, at 50,000 feet, a flight Mach number of 1.8, rated engine speed, and design-point recovery,

$$\left.\frac{\partial w_e}{\partial N}\right|_P = 0.03$$

$$\left.\frac{\partial w_e}{\partial P}\right|_N = 0.062$$

$$\frac{CA_b}{\sqrt{T}} = 0.003$$

CN-2

from which the solution to equation (4) is

$$-\left.\frac{\partial P}{\partial N}\right|_{A_b} = 0.462$$

and, in percentage,

$$-\left.\frac{\frac{\partial P}{P}}{\frac{\partial N}{N}}\right|_{A_b} = 2.24 \tag{7}$$

Calculation of $\frac{\partial N}{N}\Big/\frac{\partial P}{P}$ and $\frac{\partial P}{P}\Big/\frac{\partial N}{N}$ at different flight conditions indicates that there are only negligible changes in the interaction effects for a wide range of flight conditions.

Final form of simulated supersonic turbojet engine. - The final form of the simulated supersonic turbojet engine is shown in figure 6. This simulation consists of the turbojet engine and control of figure 2, cascaded with the diffuser and control of figure 5, and includes the

interaction effects of engine speed on diffuser pressure and of diffuser pressure on engine speed. As indicated previously, it was assumed that the response of control-tap pressure to a change in bypass-door position (or engine speed) was a lag, cascaded with the dead time required for the change in pressure at the diffuser exit to move upstream to the shock-position control tap. On the other hand, it was assumed that the front of the engine was sufficiently close to the diffuser bypass door to result in a negligible dead time and that the change in pressure felt by the engine for a change in bypass-door position was therefore a function only of the diffuser lag.

4084

RESULTS OF ANALOG STUDY

For step inputs at the pressure-setting and speed-setting control points, the effects of the natural frequency of the servomotor and bypass-door combination (response), of diffuser dead time and diffuser lag, and of engine time constant on the responses of the system were investigated.

Interaction Effects

Figure 7(a) shows the response of engine speed error and diffuser pressure error for a step disturbance in pressure setting. The error measurements were used because they were convenient to obtain, and they actually represent the negative values of the changes in engine speed and diffuser pressure immediately following the step. (The error is the difference between the set value and the actual value of the variable.)

Because the gain terms used in the analog simulation were set up in terms of percentages, equivalent percentage changes in the variables would be expected to reflect equal deviations of the variables shown in figure 7(a). However, it is to be noted that the pressure trace shown does not take into account the fact that the change in total pressure at the diffuser exit has not been transposed into a subsequent change in static pressure at the shock-position pressure tap. Inasmuch as this transposition (or gain of control-tap static pressure with respect to a change in diffuser-exit total pressure) could vary widely for different diffusers, no attempt was made to convert diffuser total pressure to a static pressure at the shock-position pressure tap. Therefore, the pressure error shown in figure 7(a) is an error in diffuser-exit total pressure. The error is significant in that it reflects the variable to which the engine speed responds and it is a figure of merit with respect to diffuser performance.

If the initial disturbance in diffuser-exit total pressure indicated in figure 7(a) is assumed as a 100-percent change in pressure, it can be seen that the resultant change in controlled engine speed is probably only on the order of about 2 percent. Therefore, figure 7(a) indicates that a pressure disturbance in the diffuser has a negligible effect on engine speed.

The settings used for the data of figure 7(a) were more or less arbitrary, except that they were such as to result in a reasonable response of the diffuser and engine separately, when these loops were isolated from interaction effects.

4084

The responses of engine speed error and diffuser-exit total-pressure error to a step disturbance in speed setting are shown in figure 7(b) for the same dynamic and gain settings as in figure 7(a). Figure 7(b) shows that a given percentage disturbance in engine speed for the control settings used results in an even larger percentage disturbance in diffuser-exit total pressure. Variation of the diffuser response with other settings is discussed in subsequent sections.

CN-2 back

Effect of Servomotor Response and Diffuser Dead Time on Controlled Diffuser Response Time

With an engine time constant of 3.7 seconds and an engine loop gain of 8, step disturbances in pressure settings were made for various servomotor time constants and diffuser dead times. The exceedingly long engine time constant was assumed in order to accentuate any effects the engine might have on the diffuser response. In each case the loop gain of the controlled diffuser was adjusted so that the pressure response was underdamped and the first overshoot was maintained constant at 5 percent of the original disturbance. A nondimensional plot of these data is shown in figure 8, where response time is the time required for the diffuser pressure to first arrive at the new desired pressure setting (before the overshoot). Figure 9 shows the same data in a form in which the effects of dead time and servomotor response on response time can be evaluated separately. Figures 8 and 9 indicate the extent to which controlled diffuser response time is increased for increased values of diffuser dead time (and diffuser lag) and for slower values of servomotor response.

Effect of Controlled Engine on Controlled Diffuser Response

With the controlled engine removed from the system, the procedure for the data of figure 8 was repeated. It was found that the diffuser response was essentially unchanged. In other words, the controlled

diffuser response characteristics were a function only of diffuser and diffuser control dynamics and were unaffected by the controlled engine. Figure 10 shows a typical response of the diffuser to a step disturbance in pressure setting with the controlled engine included in the system, and superimposed upon this response is the response to the same disturbance but without the engine. The superimposed responses are virtually identical.

The fact that the engine does not affect the diffuser response characteristics is attributable to three factors: (1) The gain term corresponding to the effect of diffuser-exit total pressure on engine speed is small; (2) a change in diffuser-exit total pressure represents a lagged input to the engine because of the diffuser lag; and (3) the engine, when controlled at a loop gain of 5 to 8, is fast enough to correct for the effect of diffuser pressure on engine speed before any appreciable changes in speed can occur.

4084

Effect of Engine Time Constant, Servomotor Response, and Diffuser Dead Time on Ability of Diffuser Control to Correct for Engine Speed Setting Disturbance

The effect of step disturbances in engine speed setting on the resulting initial pressure error in the diffuser was investigated for various settings of engine time constant, servomotor response, and diffuser dynamics. The loop gain of the engine was maintained constant at 8, and the loop gain (or control gain) of the diffuser was varied so as to result in the minimum possible initial pressure error in the diffuser. This phase of the investigation, therefore, is indicative of the ability of the diffuser control to correct for engine speed disturbances. It assumes importance because large initial pressure disturbances, which might result from engine speed disturbances, could result in regurgitation of the shock and inlet buzz for a decrease in engine speed (increased diffuser-exit pressure). On the other hand, an acceleration of the engine would lower the diffuser-exit pressure and thereby bring the engine compressor closer to its stall limit.

The response of the diffuser pressure to step disturbances in speed setting is illustrated in figure 11. The set of curves on the bottom represents the error without control and the minimum error attainable with control. The set of curves at the top is similar, but a lower diffuser control gain was used to result in a more damped response and, therefore, a more practical system for actual control.

Data giving the results of this investigation are shown nondimensionally in figure 12. The error-ratio ordinate represents the ratio of the initial pressure disturbance obtained with diffuser control, as compared with the pressure disturbance that would result without diffuser control. The bottom curve of figure 12 indicates that, for no diffuser dynamics, the pressure error can be reduced to less than 1 percent for a servomotor control with a natural frequency of 70 radians per second (τ_e = 1 sec). The second curve from the bottom shows the effect of diffuser lag alone, and the top group of curves shows the effect of diffuser dead time cascaded with diffuser lag (the dead time and lag time constant are equal to each other for each curve of this group).

As would be expected, the pressure error is less for faster servomotor response, increasing engine time constant, and decreasing diffuser dead time and lag. The effect of dead time on the ability of the diffuser control to reduce the error is greater than the effect of diffuser lag. (At $\omega_n\tau_e = 100$, the addition of a 0.03 lag to the zero diffuser dynamics curve increased the error by a 7-percent increment; whereas the further addition of a dead time of 0.03 further increased the error by a 23-percent increment.)

It should be noted that the effect of engine time constant on the controlled diffuser response, as indicated by figure 12, does not imply a contradiction to the conclusion that the controlled diffuser response characteristics are independent of the engine. The source of disturbance for the data of figure 12 was a step change in speed setting; the resultant speed change was a function of controlled engine dynamics, and this speed change represented the disturbance to which the diffuser responded. Therefore, changes in diffuser response for variations in engine time constant were actually the result of variations in input disturbances to the diffuser rather than the result of any change in diffuser response characteristics.

Although data of figure 12 were obtained for an engine loop gain of 8, correlation with other loop gains can be obtained by treating a change in loop gain as an equivalent change in engine time constant. This relation between loop gain and equivalent engine time constant is obtained from the closed-loop transfer function of the controlled engine:

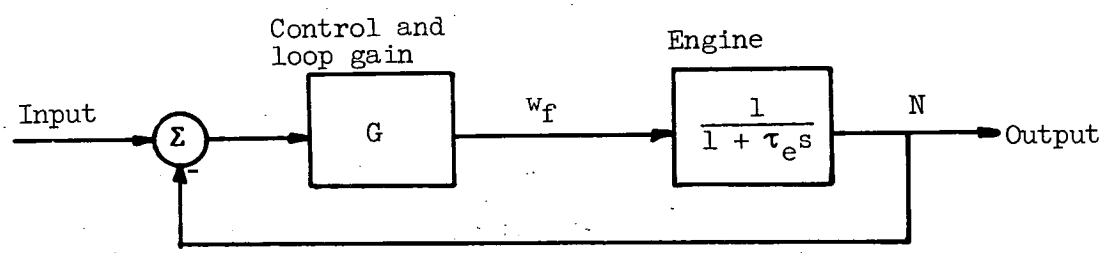

Sketch (c)

$$\frac{\text{Output}}{\text{Input}} = \frac{\dfrac{G}{1 + \tau_e s}}{1 + \dfrac{G}{1 + \tau_e s}} = \frac{G}{1 + G + \tau_e s} = \frac{\dfrac{G}{1 + G}}{1 + \dfrac{\tau_e}{1 + G} s}$$

Therefore, equivalent time constant $= \dfrac{\tau_e}{1 + G}$. The control is considered as only proportional, rather than proportional-plus-integral, because the integral does not contribute to the initial response with which figure 12 is concerned.

For a loop gain of 8 and an engine time constant of 1, the equivalent time constant is $\dfrac{1}{1 + 8} = 0.11$. Therefore, the abscissa scale $\omega_n \tau_e$ would be evaluated at $(\omega_n)(0.11)$, and the parameters t_D/τ_e and τ_d/τ_e would be evaluated at $t_D/0.11$ and $\tau_d/0.11$.

Loop Gains at Stability Limit

The data of figure 12 were obtained by setting the diffuser loop gains to the highest possible loop gains consistent with stable operation. These values of loop gain, therefore, represent the loop gains of the controlled diffuser at the stability limit. A plot of the controlled diffuser loop gains at instability, as a function of the product of the servomotor natural frequency and the diffuser dead time, is shown in figure 13. The curve of figure 13, and therefore the loop gains at diffuser instability, was unaffected by the engine response.

SUMMARY OF RESULTS

In order to investigate supersonic diffuser control response requirements, a supersonic turbojet engine with a shock-position control operating on a variable diffuser bypass and a speed - fuel-flow control on the engine was simulated on an electronic analog computer. Diffuser operation was assumed to be supercritical at all times. Interaction gain terms relating the diffuser and engine were derived from air-flow and fuel-flow characteristics of a selected turbojet engine.

The investigation indicated that a pressure disturbance in the diffuser had only a negligible effect on engine speed, whereas a disturbance in engine speed had a large effect on diffuser pressure and could therefore impose severe requirements on the diffuser control response. The controlled diffuser response to a pressure disturbance appeared to be essentially a function only of the diffuser control and diffuser dynamics because of the small effect of diffuser pressure on engine speed

and the fast response of the controlled engine (assuming controlled engine loop gains of 5 to 8).

The ability of the diffuser control to attenuate a pressure disturbance that would originate from a change in engine speed setting improved with faster servomotor response, lower diffuser dead time and lag, and slower engine response. The effect of diffuser dead time was found to be greater than the effect of diffuser lag on the controlled diffuser response.

Lewis Flight Propulsion Laboratory
National Advisory Committee for Aeronautics
Cleveland, Ohio, May 21, 1956

REFERENCES

1. Boksenbom, Aaron S., Novik, David, and Heppler, Herbert: Optimum Controllers for Linear Closed-Loop Systems. NACA TN 2939, 1953.

2. Dandois, Marcel, and Novik, David: Application of Linear Analysis to an Experimental Investigation of a Turbojet Engine with Proportional Speed Control. NACA TN 2642, 1952.

3. Wilcox, Fred A.: Investigation of a Continuous Normal-Shock Positioning Control on the Bypass of a Supersonic Inlet in Combination with the J34 Turbojet Engine. NACA RM E55J10, 1956.

4. Vasu, G., Wilcox, F. A., and Himmel, S. C.: Preliminary Report of Experimental Investigation of Ram-Jet Controls and Engine Dynamics. NACA RM E54H10, 1954.

5. Wilcox, Fred A., and Anderson, Arthur R.: An Analysis of Ram-Jet-Engine Time Delay Following a Fuel-Flow Disturbance. NACA RM E55D22, 1955.

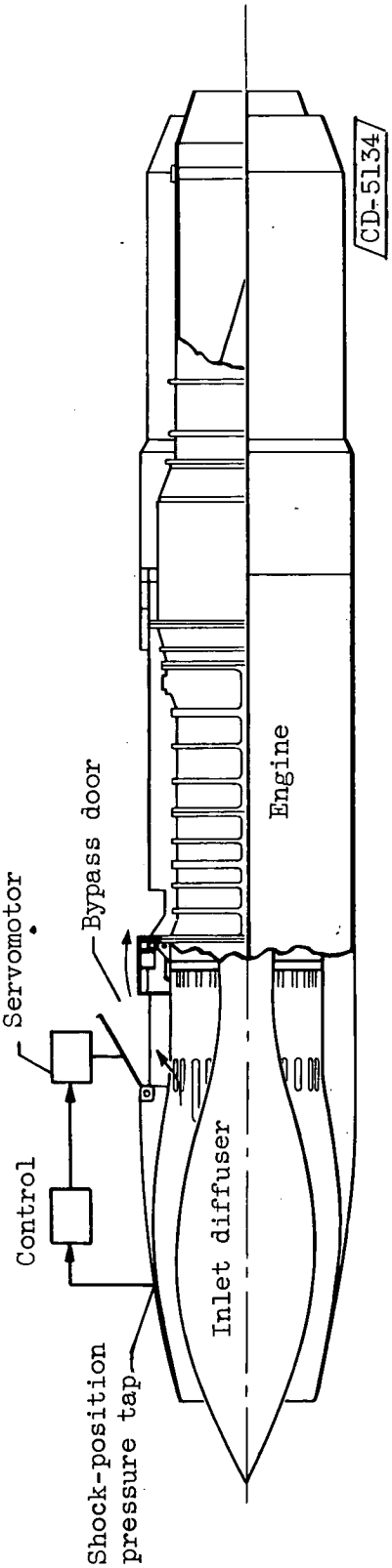

Figure 1. - Schematic diagram of supersonic turbojet engine with diffuser control.

CN-3 4084

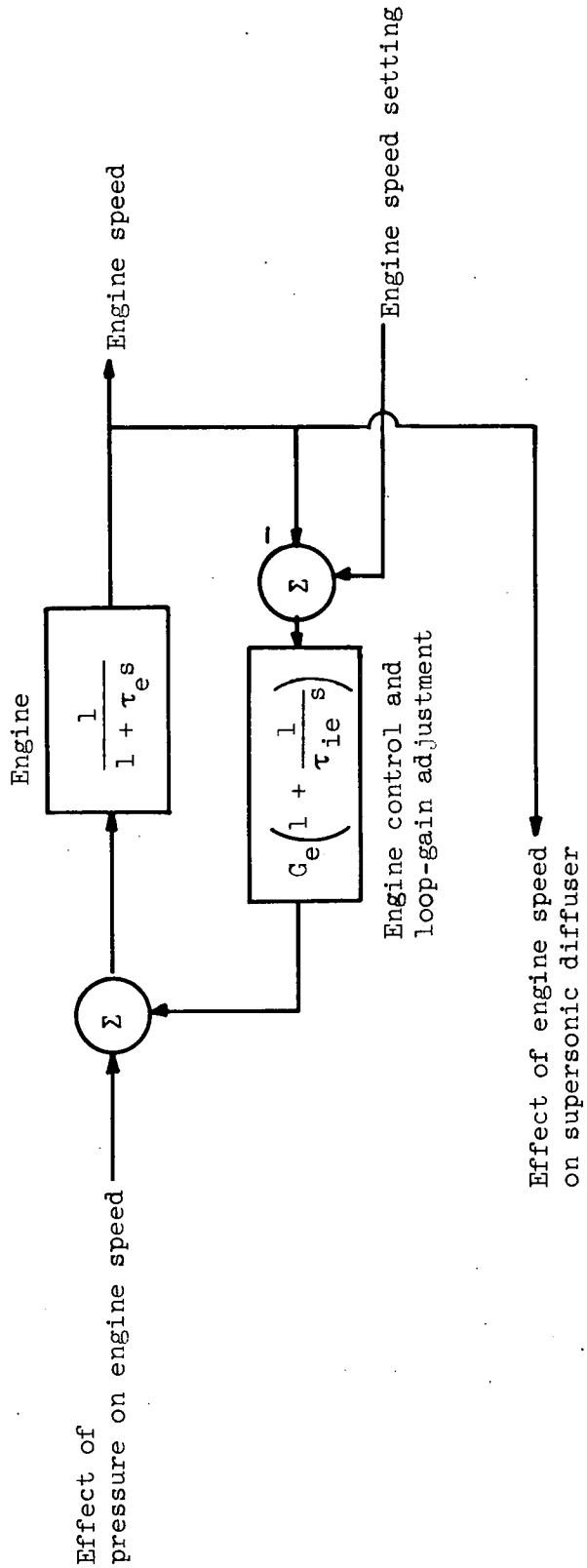

Figure 2. - Block diagram of simulation of turbojet engine and control.

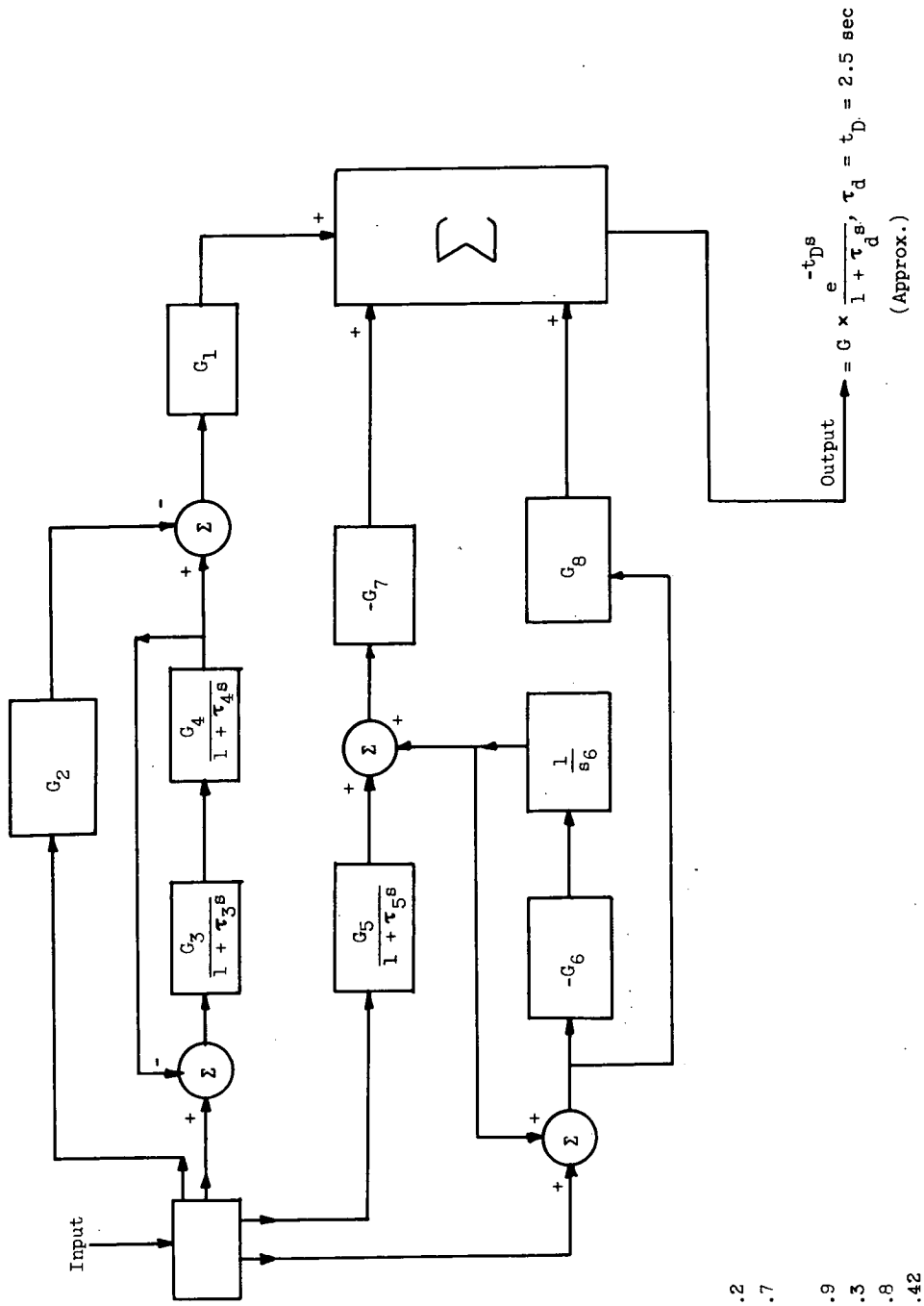

$G_1 = 2$
$G_2 = .2$
$G_3 = .7$
$G_4 = 1$
$G_5 = .9$
$G_6 = 2.3$
$G_7 = .8$
$G_8 = .42$
$\tau_3 = 2$
$\tau_4 = 2$
$\tau_5 = 1.4$

Figure 3. - Analog simulation of diffuser dead time in series with diffuser lag.

4084

CN-3 back 4084

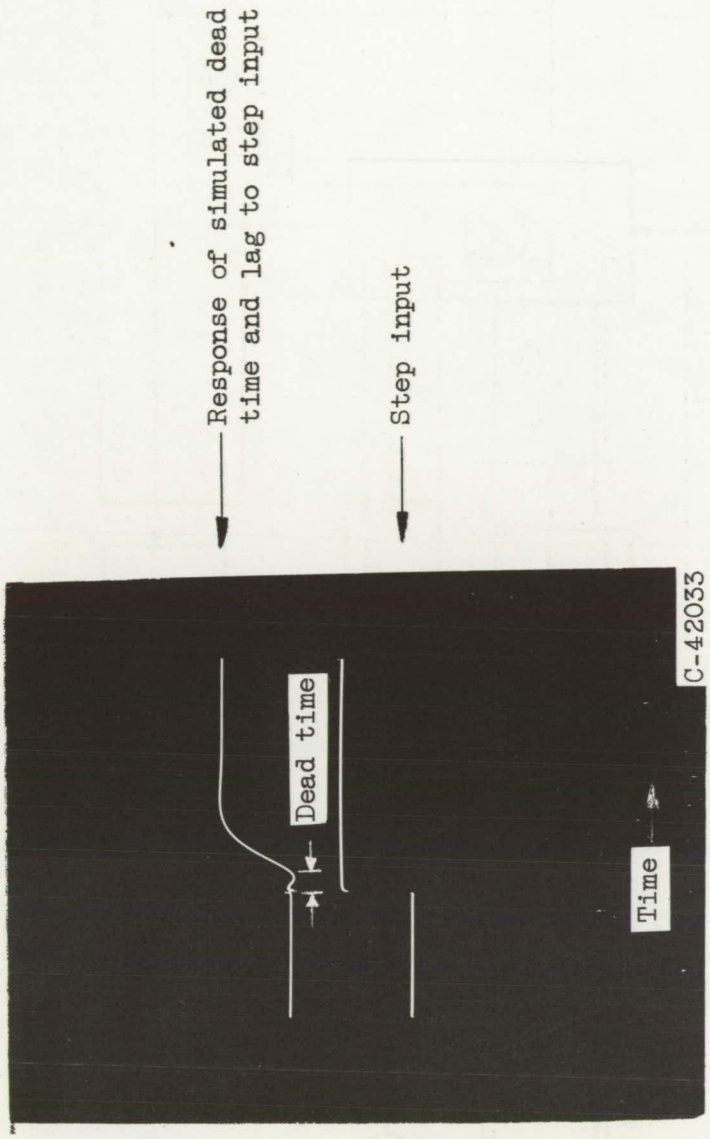

Figure 4. - Response of simulated diffuser dead time and lag to a step input.

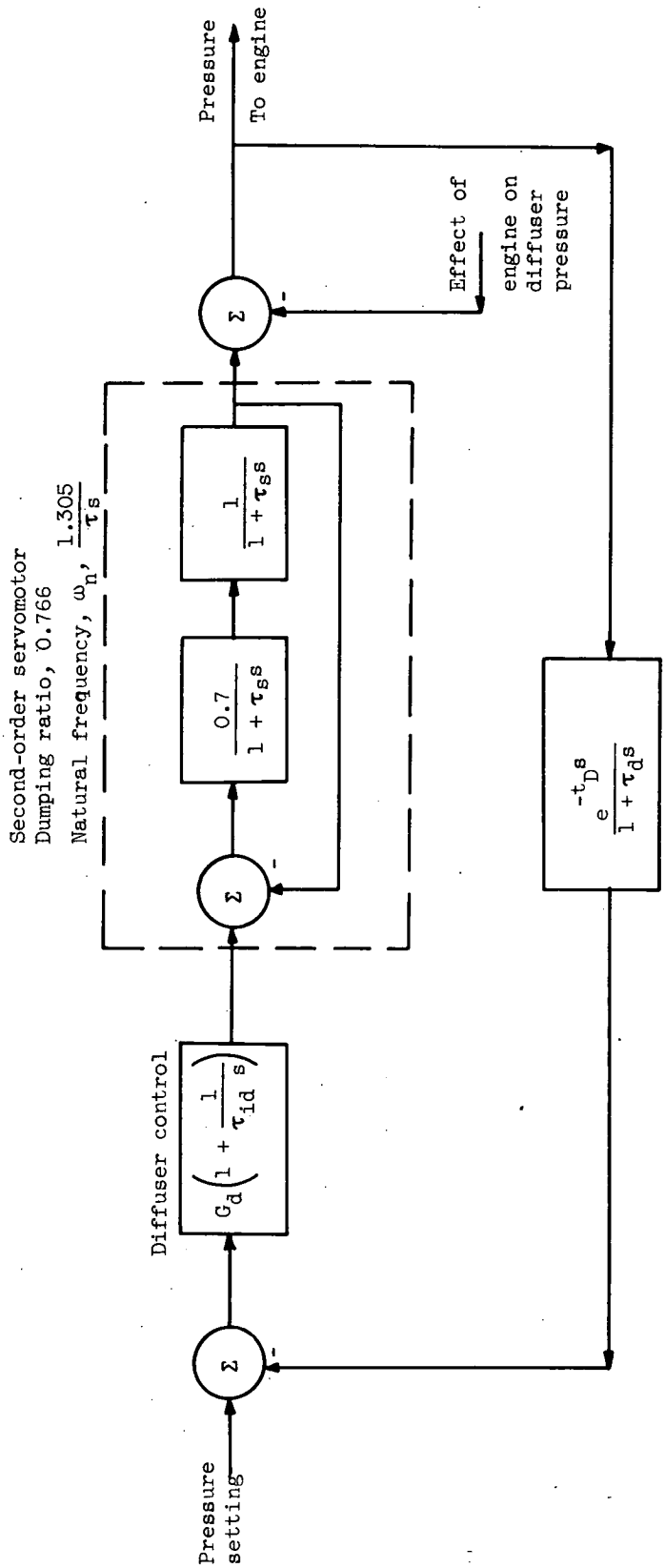

Figure 5. - Block diagram of simulation of controlled diffuser.

4084

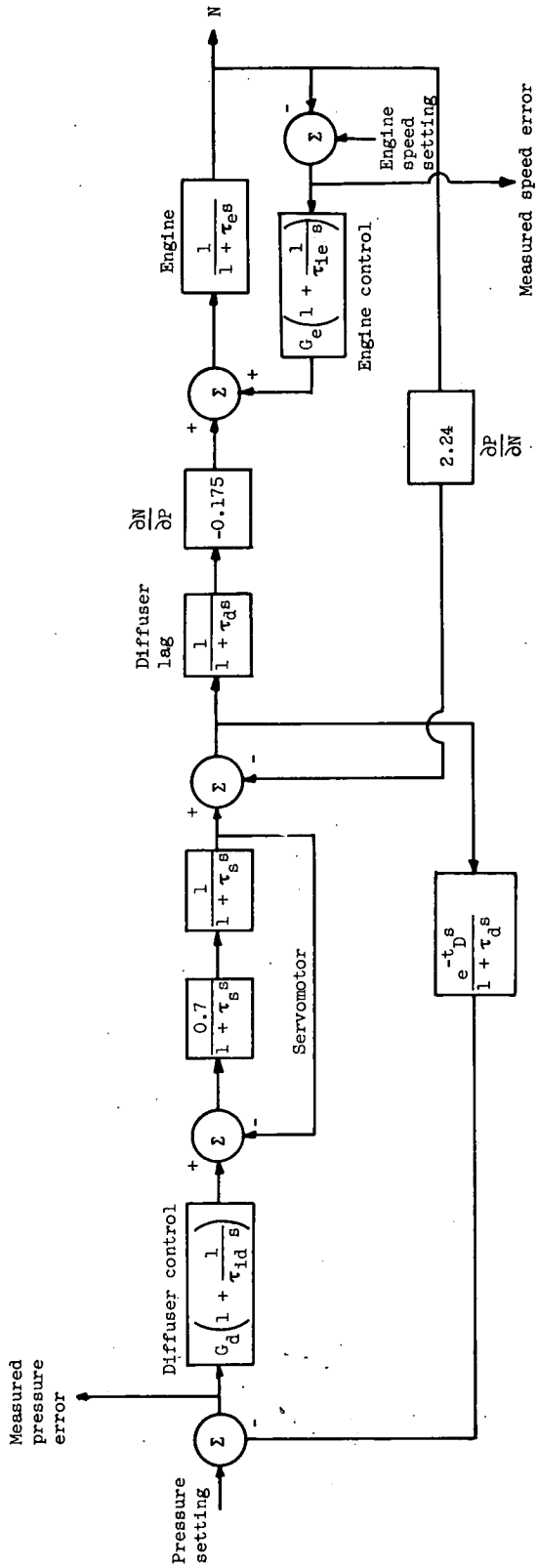

Figure 6. - Block diagram of simulation of controlled supersonic turbojet engine.

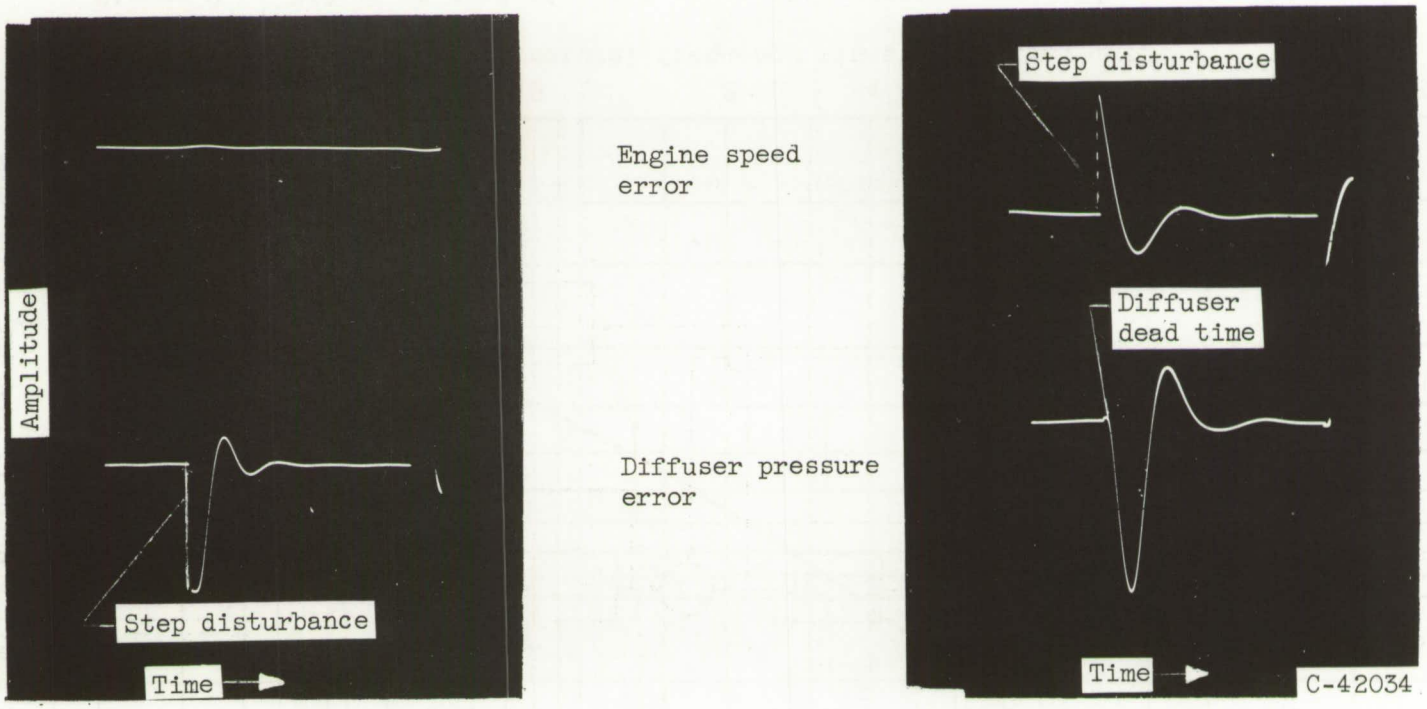

(a) Step disturbance in diffuser pressure setting.

(b) Step disturbance in engine speed setting.

Figure 7. - Response of engine speed and diffuser pressure to step disturbances. Servomotor time constants, 0.047 second; servomotor natural frequency, 28 radians per second; diffuser dead time, 0.03 second; diffuser lag, 0.03 second; diffuser loop gain, 0.41; diffuser control integrator time constant, 0.03; engine time constant, 1 second; engine loop gain, 5; engine control integrator time constant, 0.063.

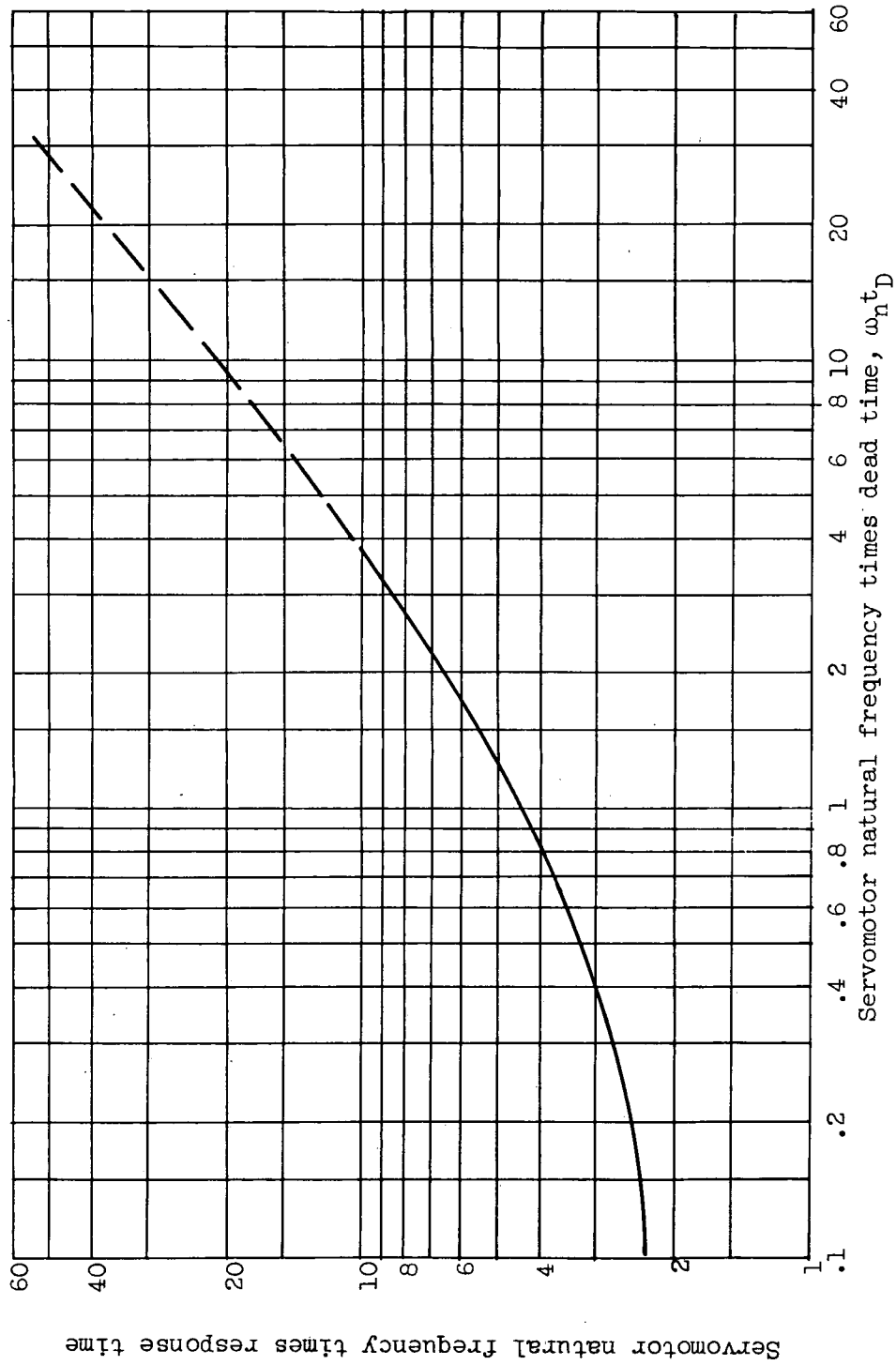

Figure 8. - Effect of dead time and servomotor response on diffuser rise time, shown nondimensionally. Diffuser lag time constant equal to dead time.

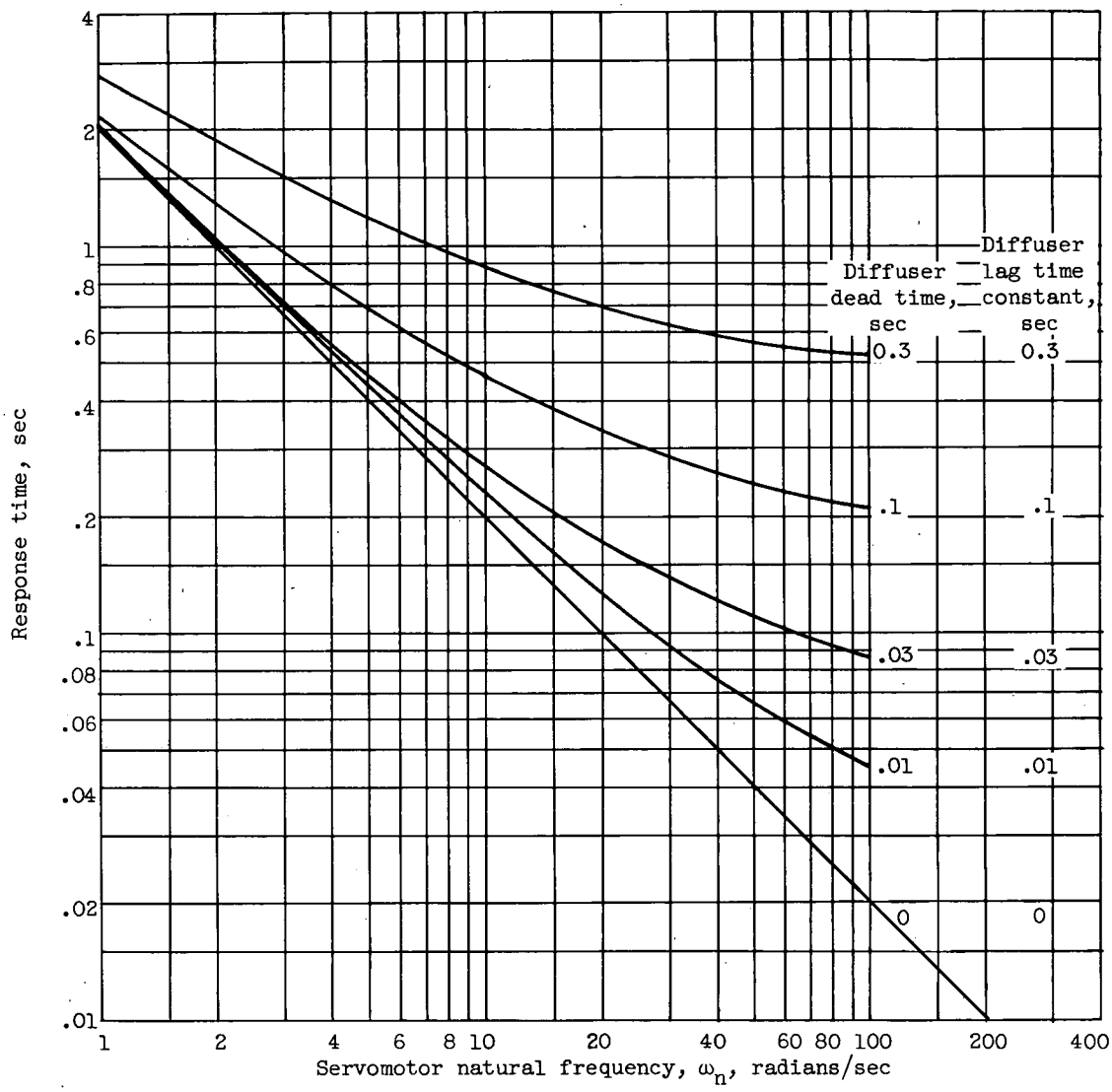

Figure 9. - Effect of diffuser dynamics and servomotor response on diffuser rise time.

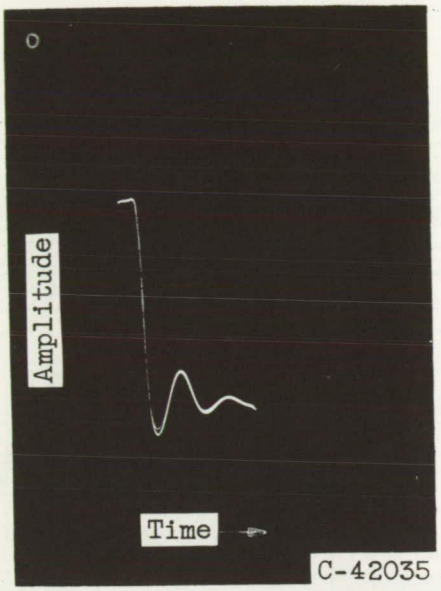

Figure 10. - Comparison of controlled diffuser response with and without engine.

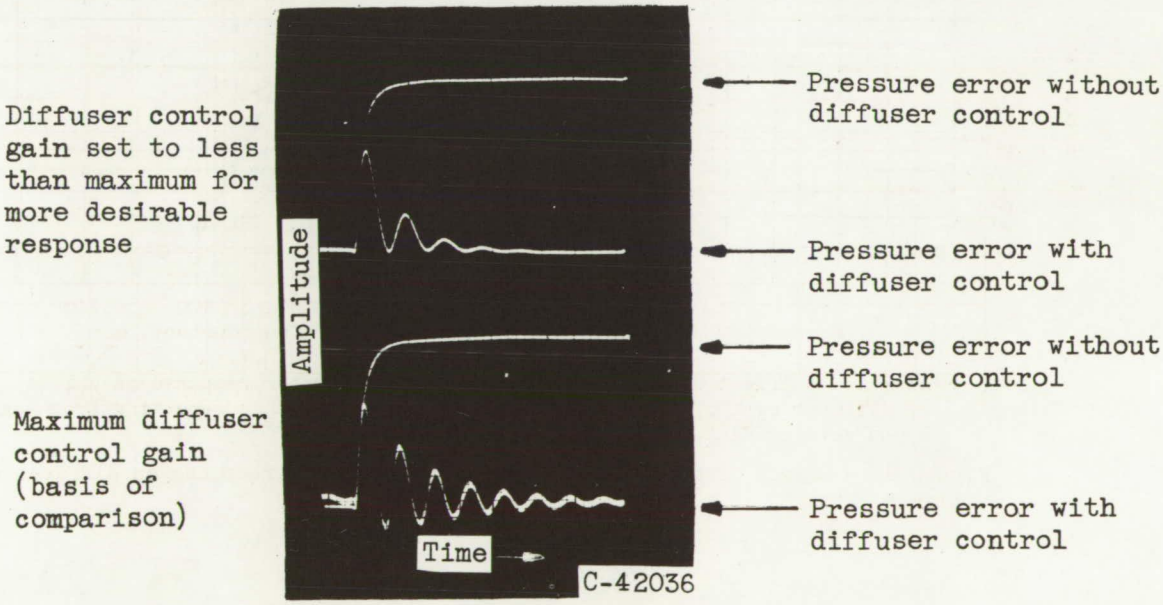

Figure 11. - Response of controlled diffuser for disturbance in engine speed setting.

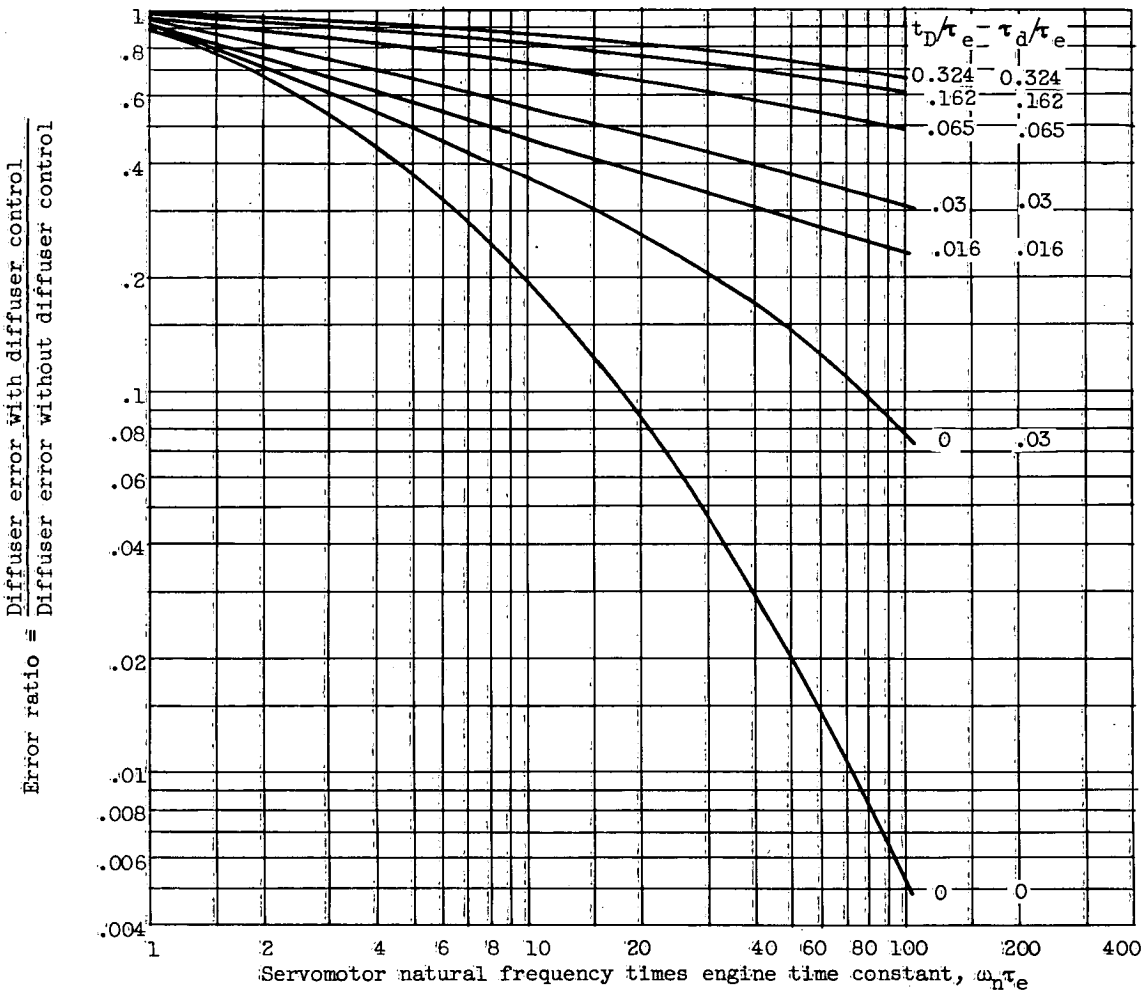

Figure 12. - Effect of diffuser dynamics and servomotor response on ability of diffuser control to correct for pressure disturbance resulting from engine speed setting disturbance.

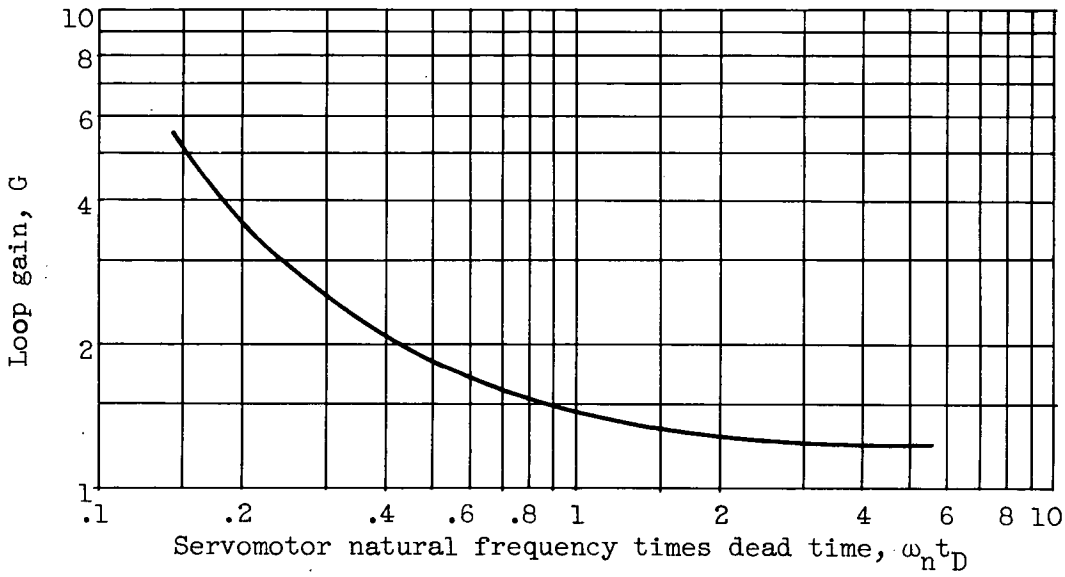

Figure 13. - Loop gain at instability as a function of servomotor natural frequency and diffuser dead time. Diffuser lag time constant equal to dead time.