X 67 64815

449

CONFIDENTIAL

Copy
RM E58E20a

NACA RM E58E20a

NACA

RESEARCH MEMORANDUM

EXPLORATORY PERFORMANCE INVESTIGATION OF COBURNER-TYPE COMBUSTORS

By Allen J. Metzler and Helmut F. Butze

Lewis Flight Propulsion Laboratory
Cleveland, Ohio

CLASSIFICATION CHANGED TO
DECLASSIFIED AUTHORITY
NASA LIST #1
9-14-62

CLASSIFIED DOCUMENT

This material contains information affecting the National Defense of the United States within the meaning of the espionage laws, Title 18, U.S.C., Secs. 793 and 794, the transmission or revelation of which in any manner to an unauthorized person is prohibited by law.

NATIONAL ADVISORY COMMITTEE
FOR AERONAUTICS

WASHINGTON
August 14, 1958

CONFIDENTIAL

DECLASSIFIED

NATIONAL ADVISORY COMMITTEE FOR AERONAUTICS

RESEARCH MEMORANDUM

EXPLORATORY PERFORMANCE INVESTIGATION OF COBURNER-TYPE COMBUSTORS*

By Allen J. Metzler and Helmut F. Butze

SUMMARY

An investigation was conducted to evaluate the performance of two combustor designs at simulated coburner flight conditions. Two flameholders, one consisting of V-gutters attached to a central pilot section and the other consisting only of a grid of sloping V-gutters, were designed for a rectangular test section approximating a sector of a coburner annulus. Combustion efficiency and stability tests were conducted at inlet conditions simulating a coburner start at a flight Mach number of 0.9 at an altitude of 50,000 feet and a Mach 2.5 target run at an altitude of 80,000 feet. The effect on performance of hydrogen addition, equal to 1 percent of the total fuel flow, was also investigated.

At the supersonic test condition both combustors attained maximum combustion efficiencies of about 89 percent. At the subsonic starting condition the piloted combustor attained a maximum combustion efficiency of about 81 percent, but the sloping V-gutter combustor could not be operated stably at this condition. However, at the high fuel-air ratios required for acceleration, the sloping V-gutter combustor, with 1 percent hydrogen addition, performed stably and as efficiently as the piloted combustor. In general, the hydrogen addition resulted primarily in improvements in combustor stability; the effects on combustion efficiency were not considered significant.

INTRODUCTION

Reheat turbofan engines in which the bypass air is burned within the bypass duct (ref. 1) (commonly called coburning) have been proposed for long-range, high-altitude flight missions. Analyses of typical aircraft flight plans indicate that inlet conditions to the coburner, though severe, approximate those to a ramjet except for a fairly short, but very critical, period during which the coburner must start at conditions of subsonic, high-altitude flight and be capable of rapidly accelerating the aircraft to supersonic flight. During this period, inlet

*Title, Unclassified.

conditions to the coburner are appreciably more severe than normal ramjet inlet conditions because of low inlet pressures and temperatures and the high-temperature-rise requirements imposed upon the combustor.

The problem of coburner design and performance has received very little experimental attention; however, it is reasonable to expect that current ramjet design concepts could also be successfully applied to the coburner problem since the inlet operating regimes are generally similar. For the more severe operating conditions, namely, start and acceleration, the use of small quantities of chemical additives such as hydrogen, as suggested in references 2 and 3, to improve the combustor performance may be applicable. The investigation reported herein was undertaken at the Lewis laboratory to provide experimental evidence pertinent to such presumptions by (1) determining the general performance levels of two different combustor designs at coburner-inlet conditions and (2) evaluating the effectiveness of hydrogen as a chemical additive to improve combustor performance.

Two basically different combustors were designed for this investigation. One combustor was representative of the piloted-ramjet-type combustor and consisted of a large pilot zone, which closely reproduced the pilot zone of a combustor reported in reference 4, and trailing, multiple V-gutter flameholders. The second combustor was representative of the basic V-gutter grid flameholder type. Each combustor was also provided with a manifold for hydrogen addition. Each combustor was operated over a range of fuel-air ratios at inlet conditions simulating (1) coburner starting at an altitude of 50,000 feet at a flight Mach number of 0.9 and (2) a target run at an altitude of 80,000 feet at a flight Mach number of 2.5. Liquid MIL-F-5624C, grade JP-4 fuel was used for most of the investigation. Gaseous propane, however, was used for some of the tests to determine combustor performance with a prevaporized fuel.

The performance of the combustors is discussed on the basis of combustion efficiency and pressure limits for stable burning. In addition, the effect of pilot strength on combustor performance was evaluated either through changes in the pilot fuel-air ratio or through the addition of hydrogen to the pilot zone. The results presented in this exploratory study were restricted solely to an evaluation of these two combustor designs. No effort was made to improve combustor performance through changes in geometry.

APPARATUS AND PROCEDURE

Equipment Installation

Test facility. - The test facility used for this investigation is shown schematically in figure 1. Combustion air was preheated electrically prior to metering by a variable-area-sector orifice. For those

DECLASSIFIED

test conditions where electrical preheat was insufficient, additional preheat was obtained by burning part of the air in a single-can combustor located in the bypass leg of the air inlet system. Therefore, for some of the data reported herein, combustion inlet air was vitiated, but the effect of such vitiation is considered minor because of the low fuel-air ratios required to complete preheat. A choke plate maintained preheat combustor pressure well above atmospheric, and preliminary tests indicated that preheat combustion was essentially complete in this unit. The rectangular test section was 6 feet long as measured from the inlet flange to the set of air-atomized water spray bars for combustion-quench. For the major portion of the work reported herein, a combustor cross section of 10 by 18 inches was used. For the remainder of the program, the test-section size was reduced to 10 by 12 inches in order to attain lower combustor-inlet pressures. The 18-inch dimension was reduced to 12 inches by means of a blanking table as shown in the figure.

Piloted combustor. - This combustor consisted essentially of a separate pilot zone and a V-gutter-type main flameholder (fig. 2). The pilot section was patterned after the pilot zone of an experimental high-altitude combustor previously developed and tested at this laboratory (ref. 4). Pilot-combustor construction detail and combustor and fuel-manifold positioning in the test section are indicated in the figure. Mainstream flameholders radiated outwardly at an angle of approximately 30° from the pilot zone and consisted of 16 V-gutters of 45° included gutter angle. Each gutter was $1\frac{1}{8}$ inches across the open face. These gutters did not extend to the side walls but only to air splitter plates located 1 inch from each outer wall of the combustor as shown. The splitter plates served a dual purpose. Primarily, they served as fuel control sleeves designed to maintain a near-stoichiometric mixture at the flameholder at the combustor design point. Secondly, they provided a cooling film along the walls in the high-temperature region.

Pilot fuel was injected into the front end of the pilot zone through six 10.5-gallon-per-hour hollow-cone spray nozzles. The mainstream fuel was injected in a downstream direction through eight hollow-cone spray nozzles located between the pilot-combustor walls and the splitter plates at a plane located approximately 2 inches downstream of the last pilot air admission holes. When used, hydrogen was injected in a downstream direction through six 1/4-inch-diameter tubes 1/2 inch long located adjacent to the pilot fuel injectors. An 0.0595-inch orifice in each tube inlet ensured even distribution to all injector tubes from the supply manifold.

Combustor length, as measured from the front of the pilot zone to the combustion-quench plane, approximated 5 feet. However, only $3\frac{1}{2}$ feet were available for the combustion of the mainstream fuel since approximately 18 inches of length were utilized for fuel injection, vaporization, and mixing.

Sloping V-gutter combustor. - A simple sloping V-gutter flameholder was also constructed for test at coburner-inlet conditions. This design incorporated some of the basic principles for good afterburner or ramjet flameholder design but was otherwise untested and undeveloped. This flameholder was selected and designed for test primarily because of its inherent simplicity and because of its ready adaptability to a more thorough investigation of the effect of hydrogen injection on flameholder performance. The flameholder consisted of a sloping V-type grid of seven gutters, four vertical and three horizontal (fig. 3). Each gutter measured $1\frac{3}{4}$ inches across the 60° included angle of the gutter. Total projected gutter area blockage approximated 55 percent of the combustor cross-sectional area; however, maximum planar area blockage approximated only 19 percent. Exclusive of the fuel mixing length, the combustor length was about 4 feet. All liquid fuel was injected from six manifolded hollow-cone spray nozzles located in a plane 13 inches upstream of the flameholder apex. Nozzle position in the inlet cross section is indicated in the figure.

An additive injector for the injection of gaseous hydrogen was integral with each gutter of the grid and was positioned within the gutter toward the apex of the V as shown in figure 3. Inconel tubing was drilled (number 56, 0.0465-in. diam.) at 1-inch intervals and welded to one side of the V with the holes facing the apex of the gutter in order to dissipate the jet velocity and to ensure distribution of the hydrogen along the entire gutter length. Thus, the hydrogen was injected into the gutter wake as a low-velocity stream issuing from a 1/16-inch slot formed by the injector tubing and one side of the V-gutter. Individual gutters or gutter groups could be selected for hydrogen injection. This configuration of pilot injector and flameholder was the only one investigated and is not necessarily optimum for this or other flameholder geometries.

The properties and analysis of the fuels used are tabulated in table I.

Instrumentation

The planes of test instrumentation used for this investigation are shown in figure 1. Combustor-inlet air temperature, after preheat, was measured at station 2 and was used as the inlet air temperature for all combustion-efficiency calculations. Combustor-inlet total pressure was measured with a single pressure probe at station 2, and wall static pressure was measured at stations 3 and 4. Bulk outlet gas temperature following water-quench was measured at station 6 by 16 Chromel-Alumel thermocouples positioned circumferentially on two radii at centers of equal areas of the 20-inch exhaust ducting.

DECLASSIFIED

Procedure

For this investigation, combustion performance was evaluated on the basis of (1) combustion efficiency at two fixed combustor-inlet conditions and (2) the low-pressure combustor stability limits as established at constant airflow rate. The test conditions selected for the combustion-efficiency evaluation are tabulated as follows:

Test condition	Reference velocity,[a] ft/sec	Airflow rate, lb/sec		Combustor-inlet total pressure, in. Hg abs	Inlet air temperature, °F	Inlet Mach number	Fuel-air ratio range
		10"×18" Section	10"×12" Section				
A	176	6.07	4.03	13	152	0.15	0.03-0.049
B	330	9.41	6.28	19	610	0.21	0.025-0.041

[a]Based on maximum combustor area and combustor-inlet temperature and static pressure.

Test condition A approximated a coburner starting condition at a flight Mach number of 0.9 at an altitude of 50,000 feet, and condition B approximated a target run at an 80,000-foot altitude at a flight Mach number of 2.5.

The test conditions for the combustor stability investigation reported herein were identical with those specified previously except that combustor-inlet pressure and, hence, reference velocity were varied incrementally. Therefore, the designation of the test conditions as A and B shall be retained throughout the entire report. Combustor-inlet total pressure was varied from about 24 inches of mercury absolute to blowout. Combustion efficiency was measured at each incremental pressure setting. The low-pressure stability limit was established either as the inlet pressure at blowout or as the inlet pressure at which combustor temperature rise dropped abruptly. The stability limits of the two combustors were determined both with and without hydrogen addition; but, because of exhaust facility limitations, stability limits of the piloted combustor could be determined at condition A only. Hydrogen addition in all cases ranged from 0.5 to 1 percent of the total liquid-fuel-flow rate.

Combustion efficiency was calculated as the ratio of the actual enthalpy rise across the combustor to the theoretical enthalpy rise based upon the heating value of the fuel. The actual enthalpy rise was determined by a heat-balance method based on the inlet air enthalpy, the heat absorption by the quench water, and the outlet gas enthalpy following water-quench. The heat rejection to the air jacket surrounding the

combustor and the convective heat loss from the uninsulated ducting were neglected. However, these errors are estimated to be about 2 percent. Bulk gas temperature following the combustion-quench was maintained constant at approximately 700° F to ensure complete vaporization of the quench water and to minimize errors due to the heat capacity of the exhaust ducting and its resulting temperature lag. Blowout limits were reproducible to about 0.5 inch of mercury and combustion efficiency to about 2 percent.

RESULTS AND DISCUSSION

The data obtained in the investigation of the performance of combustors operating at coburner inlet conditions are tabulated in table II. The results obtained are presented and discussed below on the basis of the combustion efficiency and combustion stability of the test units.

Piloted Combustor

Combustion efficiency. - The combustion efficiency of the piloted combustor at the two test conditions is shown in figure 4 for pilot fuel-flow rates equivalent to 15, 20, 25, 30, and 35 percent of the total fuel-flow rate. At test condition A, combustion efficiency peaked at a value of about 81 percent but was relatively insensitive to either pilot fuel-flow rate or over-all fuel-air ratio. A peak efficiency of 89 percent was obtained at test condition B at a fuel-air ratio of 0.032 when approximately one-third of the total fuel flow was injected into the pilot zone. Combustion efficiency was sensitive to both pilot strength and over-all fuel-air ratio over most of the fuel-air ratio range investigated. The effect of pilot strength at the design fuel-air ratio of 0.041, however, was so inconsequential that combustion efficiencies for pilot strengths ranging from 20 to 35 percent only varied from 81 to 84 percent.

The combustor fueled with propane was also sensitive to pilot fuel-flow rate as indicated by the data of figure 5, and the general trend of the JP-4 fuel data of figure 4 was repeated. With propane, combustion efficiencies at low fuel-air ratios were generally higher than those with JP-4 fuel; but, at higher fuel-air ratios, combustor overenrichment reversed the trend and resulted in lower combustion efficiency with the vapor fuel. This may be more clearly shown in the comparison of peak combustion efficiencies for JP-4 and propane fuels over a range of fuel-air ratios (fig. 6). It is apparent from the figure that gains in combustion efficiency of 6 to 8 percentage points may be obtained with vapor fuel only at lean fuel-air ratios at test condition A. Rich operation at

DECLASSIFIED

both test conditions favors operation with JP-4 fuel. Combustor redesign could certainly alter this trend and favor vapor-fuel operation but was not attempted in this investigation.

Combustor stability. - Stability and combustion-efficiency data of the piloted combustor with and without hydrogen addition are shown in figure 7. Hydrogen was injected into the pilot zone, as previously described, at a flow rate equal to 1 percent of the liquid-fuel flow. The data were obtained over a range of pressures from about 18 inches of mercury absolute to the lowest pressures obtainable in the test facility. Inlet airflow rates and temperatures corresponded to those specified for condition A.

Figure 7 indicates two pertinent facts: (1) no significant increase in combustion efficiency was realized with hydrogen injection except at very low fuel-air ratios, and (2) hydrogen injection improved the combustor low-pressure stability limits. With no hydrogen addition, combustor blowout occurred at inlet pressures ranging from 11 to 13 inches of mercury absolute over the fuel-air ratio range investigated. With hydrogen addition, no blowout was encountered within the the pressure limitations of the test facility except at a fuel-air ratio of 0.049. At this point, hydrogen addition extended the stable pressure limit less than 1 inch of mercury. The ultimate gains at the other fuel-air ratios are difficult to evaluate because facility limitations did not permit the attainment of actual blowouts. However, it was observed that, with hydrogen addition to the pilot zone, combustion was steady and smooth, even at low pressures. Burner ignition also was improved by hydrogen injection.

Sloping V-Gutter Combustor

Combustor stability. - This combustor was designed as a simple unit to extend and investigate more thoroughly the effect of hydrogen addition on combustor performance. For the additive data reported herein, hydrogen was injected into the wake of all gutters except that of the horizontal apex gutter since preliminary tests had indicated this to be the optimum injection pattern for this configuration. Hydrogen injection rates of 0.5 and 1 percent of the liquid JP-4 fuel-flow rate were employed.

In figure 8 the flameholder blowout limits are presented for a range of fuel-air ratios for test conditions A and B. For both test conditions, the pressure at blowout increased with increasing fuel-air ratio; however, the rate of increase was appreciably greater at condition A than at condition B. With no hydrogen addition, blowout limits at condition A varied from 14 to 19 inches of mercury absolute over the range of fuel-air

ratios investigated. It should be noted, therefore, that this flameholder would be inoperable at the combustor-inlet pressure (13 in. Hg abs) specified for the coburner start condition. With hydrogen injection to the flameholder wake equal to 1 percent of the total fuel flow, combustor stability increased markedly. At condition A, blowout pressure limits decreased approximately 5 inches of mercury at all fuel-air ratios and at condition B approximately 2 inches of mercury. The solid symbols of figure 8(a) at fuel-air ratios of approximately 0.03 and 0.04 indicate practical blowout limits; that is, these points indicate the pressures at which temperature rise across the combustor dropped abruptly although weak burning in the immediate wake of the flameholder continued.

Also indicated on the figure are the results obtained with 0.5-percent-hydrogen addition. The stability gains obtained were not as great as those obtained with 1-percent injection. It is apparent from the figure that the effectiveness of hydrogen addition is not in direct proportion to the rate of injection. Combustion smoothness and greater ease of ignition previously observed with hydrogen addition to the piloted combustor were also apparent with the sloping V-gutter combustor.

Combustion efficiency. - The combustion efficiencies of this combustor, as a function of pressure, both with and without hydrogen addition are presented in figure 9. As noted with the piloted combustor, the major gains to be realized from hydrogen injection are those of stability rather than combustion efficiency. At condition A the addition of hydrogen increased combustion efficiency at low fuel-air ratios, but, at a fuel-air ratio of 0.049 as well as at all fuel-air ratios at condition B, the addition of hydrogen had no significant effect on combustion efficiency.

Combustor Evaluation and Discussion

The combustors used in this investigation represent two general ramjet combustor types which appear suited to the coburner problems. The two types may be catalogued as (1) combustors having a large pilot zone which is stable over wide ranges of operation, and (2) V-gutter grid combustor types which are lighter, mechanically more simple, but also inherently less stable over wide ranges of operation. Although in this investigation no attempt was made to optimize either combustor configurations or fuel systems, the results obtained indicate general trends pertinent to the advantages, problems, and general performance level of each type with respect to coburner application.

Figure 10 shows a comparison of the combustion efficiency of the two test combustors at inlet conditions simulating the coburner start and the target-run periods of operation. At the simulated-target-run inlet condition (fig. 10(a)), the data indicate little difference in the performance

DECLASSIFIED

of the two combustor types. Although both combustors were equally stable over wide ranges of fuel-air ratio, the peak efficiency of the piloted combustor occurred at a fuel-air ratio less than the design fuel-air ratio (0.041) and resulted in combustion efficiencies as much as 6.5 percent greater than those of the V-gutter combustor at the lean fuel-air ratios of test condition B. However, slight alteration of the air entry pattern would shift the curve toward higher fuel-air ratios; and it is to be expected that efficiency data for the two combustors would be near coincidence. The data also indicated that the general level of combustor efficiency could not be appreciably improved by hydrogen addition. Ramjet combustors of several designs which have been tested at inlet conditions approximating those of this investigation have exhibited qualitatively the same level of combustor performance (ref. 5). Although differences in fuel-injector design and installation, combustor temperature rise requirements, and inlet Mach numbers preclude more than a cursory comparison, nevertheless, it is apparent that, without sacrificing the level of combustor performance during the target run, several coburner-combustor designs appear possible.

For the more severe conditions existing during coburner start and acceleration, combustor design becomes more critical. The data of this investigation indicated that coburner combustors having large stable pilot regions would be capable of stable, efficient burning at low pressures over the wide range of fuel-air ratio required for coburner start and aircraft acceleration. Conversely, inlet conditions existing during burner start were well outside the stability range for the simple V-gutter grid tested in this investigation, and it was therefore inoperable at this condition. However, the addition of hydrogen, in the amount of 1 percent of the total fuel flow, to the V-gutter wake stabilized combustion over the entire fuel-air ratio range of interest. Although the combustion efficiency of the V-gutter plus additive was generally lower than that of the piloted combustor, at the rich fuel-air ratios required for rapid acceleration the performance of the two combustor types was comparable (fig. 10(b)).

The effects of hydrogen addition to both combustor types were similar. Efficiency improvements were negligible. The major effect was to improve combustor stability limits and to eliminate combustion instability, as characterized by low-frequency rumble and partial blowout and relight, at pressures near the operating limit. However, the stabilizing effect of hydrogen was appreciably more pronounced in the absence of a separate, strong pilot zone and would therefore be most applicable to simple combustor configurations which may suffer inherent stability problems.

Although the data of figure 10 indicate equivalent coburner performance for piloted combustors and more simple combustor types, an

additional factor to be considered is that of pressure drop. The following table indicates that the isothermal pressure loss of the piloted combustor was appreciably greater than that of the sloping V-gutter combustor:

Combustor	Pressure drop, percent combustor-inlet total pressure	
	Test condition A	Test condition B
Piloted combustor	4.5	10.1
Sloping V-gutter	3.5	7.5

Thus, the choice of a coburner-combustor design, whether simple or complex, may be decided by secondary factors such as weight, mechanical complexity and durability, or pressure drop, since the data of this investigation have indicated that the performance levels of either simple or complex designs may be nearly identical.

SUMMARY OF RESULTS

Exploratory tests were conducted to evaluate the combustion performance of two different flameholders, one consisting of a set of V-gutters attached to a central pilot zone and the other consisting of a simple V-gutter grid, at simulated coburner-inlet conditions. Test condition A simulated a coburner start at a flight Mach number of 0.9 at a 50,000-foot altitude. Test condition B was a simulated supersonic target run at Mach number 2.5 at an 80,000-foot altitude. The following results were obtained:

1. The piloted combustor performed stably with JP-4 fuel at the specified test conditions with combustion efficiencies as high as 81 percent at test condition A and 89 percent at test condition B. In general, the performance was similar to that of present-day ramjet combustors operating at similar inlet conditions.

2. Combustion efficiencies of the sloping V-gutter combustor were as much as 6.5 percent lower than those of the piloted combustor in the lean fuel-air ratio range of test condition B; in the high fuel-air ratio range, however, the efficiencies of the two combustors were comparable. At test condition A, the sloping V-gutter combustor was inoperable. However, with the addition of gaseous hydrogen to the flameholder wake in the amount of 1 percent of the total fuel flow, the combustor performed stably and as efficiently as the piloted combustor in the high fuel-air ratio range.

DECLASSIFIED

3. Hydrogen addition improved combustor stability. The effect of hydrogen addition on combustion efficiency was considered insignificant. The stability improvement was most pronounced with the sloping V-gutter combustor where, through the addition of 1 percent hydrogen to the gutter wake, combustor blowout limits were lowered as much as 5 inches of mercury absolute.

Lewis Flight Propulsion Laboratory
National Advisory Committee for Aeronautics
Cleveland, Ohio, May 26, 1958

REFERENCES

1. Weeks, Norman E., Jr.: Comparative Design and Performance Analysis of Turbofan and Turbojet Engines. Tech. Rep. 55-239, pt. 2, WADC, May 31, 1955. (Contract AF-33(616)-2472.)

2. Anon.: Afterburner Performance Increase Through Chemical Additives. Marquardt Aircraft Co., Jan. 23, 1958.

3. Ruegg, F. W., and Klug, H. J.: Third Report of Progress on the Studies of Jet Engine Combustors. Rep. 4634, NBS, Mar. 31, 1956.

4. Norgren, Carl T.: Performance at Simulated High Altitudes of a Prevaporizing Annular Turbojet Combustor Having Low Pressure Loss. NACA RM E56I14, 1956.

5. Cervenka, A. J., and Friedman, R.: Ramjet Performance. Ch. XIV of Adaptation of Combustion Principles to Aircraft Propulsion. Vol. II - Combustion in Air-Breathing Engines. NACA RM E55G28, 1956.

TABLE I. - FUEL ANALYSIS

	MIL-F-5624C, grade JP-4	Propane	Hydrogen
ASTM Distillation D86-46, °F			
Initial boiling point	152		
Percent evaporated:			
5	214		
10	239		
20	257		
30	270		
40	282		
50	294		
60	305		
70	317		
80	334		
90	356		
95	379		
Final boiling point	421		
Residue, percent	1.0		
Loss, percent	0.5		
Reid vapor pressure, lb/sq in.	2.6		
Specific gravity, 60°/60° F	0.763		
Hydrogen-carbon ratio	0.171	0.225	
Net heat of combustion, Btu/lb	18,710	19,900	50,965
Aniline point, °F	135.7		

DECLASSIFIED

TABLE II. - COMBUSTOR PERFORMANCE DATA

Run	Combustor-inlet total pressure, in. Hg abs	Combustor-inlet total temperature, °F	Airflow rate, lb/sec	Total fuel-flow rate, lb/hr	Percent pilot fuel	Fuel-air ratio	Flow rate of hydrogen, lb/hr	Combustion efficiency, percent	Combustor-inlet total pressure at blowout, in. Hg abs
Piloted combustor; fuel, MIL-F-5624C, grade JP-4									
1	13.1	165	6.06	652	14.8	0.0298		74	
2	13.0	165	6.09	656	19.8	.0299		78	
3	13.1	165	6.09	656	24.8	.0299		77	
4	13.0	165	6.09	655	29.9	.0298		78	
5	13.0	165	6.09	766	20.1	.0349		80	
6	13.1	165	6.15	759	25.0	.0342		81	
7	13.0	165	6.11	764	30.0	.0347		79	
8	12.9	165	6.11	904	14.6	.0410		80	
9	13.1	165	6.08	872	19.8	.0398		81	
10	13.0	165	6.09	873	24.9	.0398		80	
11	13.0	165	6.07	872	29.8	.0399		79	
12	13.1	165	6.08	983	15.1	.0449		79	
13	13.0	165	6.08	982	19.9	.0447		78	
14	12.9	165	6.08	980	25.0	.0446		78	
15	13.0	165	6.08	983	30.1	.0448		75	
16	13.0	165	6.06	1066	20.0	.0488		76	
17	13.0	165	6.07	1067	25.0	.0488		73	
18	12.9	165	6.02	1065	30.0	.0491		72	
19	13.0	165	6.08	1066	15.0	.0485		76	
20	19.0	610	9.38	831	18.7	.0246		68	
21	18.9	615	9.39	827	23.2	.0245		73	
22	19.1	595	9.40	838	29.6	.0248		78	
23	19.0	610	9.39	832	33.9	.0246		80	
24	19.0	595	9.40	1012	19.8	.0299		77	
25	19.0	610	9.39	998	23.7	.0295		81	
26	19.1	590	9.41	1016	30.0	.0300		89	
27	19.0	590	9.40	1012	25.0	.0299		82	
28	18.9	595	9.40	963	36.5	.0285		89	
29	19.0	590	9.40	1183	20.0	.0350		79	
30	19.8	590	9.40	1185	24.9	.0350		87	
31	19.9	585	9.40	1190	30.3	.0352		88	
32	19.9	575	9.41	1199	35.7	.0354		87	
33	20.4	610	9.41	1365	19.1	.0403		84	
34	20.5	595	9.41	1380	24.8	.0407		83	
35	20.4	600	9.40	1377	29.6	.0407		83	
36	20.4	590	9.40	1386	34.7	.0410		81	
37	18.1	160	6.04	656	19.2	.0301		85	
38	16.0	155	6.07	656	19.2	.0301		82	
39	13.9	155	6.07	657	19.1	.0300		78	
40	11.9	155	6.08	656	19.2	.0300		70	11.9
41	18.0	150	6.04	762	20.0	.0351		87	
42	15.8	150	6.04	768	20.0	.0353		86	
43	13.8	150	6.07	769	20.0	.0352		83	
44	12.0	150	6.06	761	20.1	.0349		78	
45	11.2	150	6.06	761	20.1	.0349		76	11.2
46	18.0	155	6.06	872	20.1	.0399		94	
47	16.1	155	6.08	870	19.7	.0397		90	
48	14.0	155	6.08	871	19.9	.0398		87	
49	12.1	153	6.08	872	19.9	.0398		80	
50	12.0	155	6.08	872	19.9	.0398		82	12.0
51	18.4	150	6.10	985	20.1	.0449		93	
52	16.0	145	6.12	982	19.9	.0446		91	
53	13.9	145	6.12	985	19.9	.0447		86	
54	12.6	145	6.12	984	20.0	.0447		80	
55	18.1	150	6.12	1063	19.9	.0482		89	
56	15.9	150	6.12	1067	19.9	.0484		86	
57	13.9	145	6.13	1062	20.0	.0482		84	
58	12.9	145	6.13	1062	20.0	.0482		77	12.9
59	18.0	145	6.15	656	20.1	.0296	6.70	86	
60	16.0	145	6.09	656	20.0	.0299	6.62	85	
61	13.9	145	6.07	657	20.0	.0300	6.47	82	
62	12.0	145	6.07	657	20.0	.0300	6.72	77	
63	11.0	145	6.07	657	20.0	.0300	6.68	74	
64	10.0	145	6.05	657	20.0	.0301	6.66	64	
65	17.9	150	6.05	765	20.0	.0351	7.89	91	
66	16.2	150	6.05	766	20.1	.0352	7.89	89	
67	14.0	145	6.07	768	19.9	.0352	7.79	86	
68	12.0	150	6.07	764	20.1	.0350	7.96	81	
69	11.2	145	6.06	764	20.1	.0350	8.01	76	
70	17.9	150	6.07	873	20.0	.0399	8.68	93	

TABLE II. - Continued. COMBUSTOR PERFORMANCE DATA

Run	Combustor-inlet total pressure, in. Hg abs	Combustor-inlet total temperature, °F	Airflow rate, lb/sec	Total fuel-flow rate, lb/hr	Percent pilot fuel	Fuel-air ratio	Flow rate of hydrogen, lb/hr	Combustion efficiency, percent	Combustor-inlet total pressure at blowout, in. Hg abs
71	14.9	145	6.05	872	20.2	0.0400	8.61	90	
72	13.0	145	6.07	871	20.1	.0399	8.56	85	
73	12.0	145	6.07	873	20.0	.0400	8.60	79	
74	18.2	150	6.07	980	19.9	.0448	10.13	93	
75	15.0	150	6.07	982	20.0	.0449	10.09	89	
76	12.6	145	6.07	986	20.0	.0450	10.09	80	
77	18.2	150	6.05	1063	20.0	.0488	11.11	91	
78	14.7	145	6.07	1066	20.0	.0487	11.12	81	
79	12.6	145	6.07	1066	20.0	.0487	11.12	70	12.6
Piloted combustor; fuel, propane									
80	13.0	150	6.08	766	15.0	0.0350		81	
81	13.0	150	6.09	881	15.0	.0402		81	
82	13.1	148	6.09	986	16.0	.0450		76	
83	13.0	148	6.09	1066	14.9	.0487		69	
84	13.0	148	6.12	662	19.8	.0301		85	
85	13.0	148	6.06	764	20.1	.0350		88	
86	13.0	148	6.08	881	20.0	.0403		85	
87	13.1	153	6.06	882	20.0	.0404		85	
88	13.0	153	6.06	985	20.0	.0452		79	
89	13.0	145	6.09	998	19.7	.0456		76	
90	13.0	146	6.09	1062	20.1	.0485		69	
91	12.9	150	6.09	662	24.8	.0302		84	
92	13.0	149	6.08	774	24.8	.0354		89	
93	13.0	148	6.10	878	25.2	.0400		80	
94	13.0	150	6.07	660	31.7	.0303		87	
95	13.0	150	6.08	767	29.9	.0351		85	
96	19.1	601	9.40	852	14.9	.0251		77	
97	19.2	610	9.43	1010	15.0	.0298		82	
98	20.2	595	9.44	1179	15.3	.0347		83	
99	19.0	595	9.47	865	19.4	.0254		84	
100	19.4	612	9.40	993	20.2	.0293		86	
101	20.4	600	9.44	1186	19.6	.0349		84	
102	19.1	605	9.47	843	25.0	.0247		87	
103	19.6	612	9.40	996	25.4	.0294		87	
104	20.5	600	9.44	1199	23.4	.0353		83	
Sloping V-gutter combustor; fuel, MIL-F-5624C, grade JP-4									
105		165	4.11	707		0.0478			19.0
106		160	4.11	657		.0444			16.9
107		160	4.11	580		.0392			15.8
109		160	4.11	512		.0346			15.3
111		160	4.11	435		.0294			14.2
112		160	3.92	705		.0500	3.65		16.2
113		160	3.92	581		.0412	3.06		10.0
114		160	3.92	435		.0308	2.33		10.5
115		160	3.92	705		.0500	7.21		13.4
116		160	3.92	581		.0412	5.92		9.8
117		160	3.92	437		.0310	4.42		9.2
118		615	6.25	790		.0350			17.9
123		630	6.28	678		.0300			17.7
124		610	6.28	565		.0250			17.6
127		610	6.30	790		.0348	4.06		16.5
128		605	6.30	676		.0298	3.42		16.1
129		610	6.30	565		.0249	2.84		15.9
130		600	6.30	790		.0348	7.93		15.9
131		610	6.30	676		.0298	6.81		15.6
132		615	6.30	565		.0249	5.72		15.0
133	19.7	160	3.99	435		.0303		71	
134	18.0	160	4.01	435		.0301		65	
135	15.9	160	4.00	435		.0302		61	
136	14.8	160	3.99	435		.0303		57	
137	19.8	165	3.98	433		.0302	2.29	75	
138	18.0	165	3.98	435		.0304	2.28	72	
139	16.1	165	3.98	438		.0306	2.30	71	

DECLASSIFIED

TABLE II. - Concluded. COMBUSTOR PERFORMANCE DATA

Run	Combustor-inlet total pressure, in. Hg abs	Combustor-inlet total temperature, °F	Airflow rate, lb/sec	Total fuel-flow rate, lb/hr	Percent pilot fuel	Fuel-air ratio	Flow rate of hydrogen, lb/hr	Combustion efficiency, percent	Combustor-inlet total pressure at blowout, in. Hg abs
140	14.1	165	3.98	433		0.0302	2.25	65	
141	12.4	165	3.98	433		.0302	2.23	56	
142	20.0	165	3.98	433		.0302	4.39	76	
143	17.9	165	3.99	433		.0302	4.31	76	
144	16.2	165	3.99	435		.0303	4.44	72	
145	13.8	165	3.98	435		.0304	4.46	67	
146	12.2	165	3.98	435		.0304	4.46	60	
147	19.9	160	4.02	580		.0401		81	
148	17.8	160	3.99	583		.0404		82	
149	16.0	160	4.00	580		.0403		73	
150	20.0	155	4.03	580		.0400	2.92	84	
151	17.8	155	4.02	580		.0400	2.91	82	
152	15.8	155	4.02	580		.0401	2.90	79	
153	13.9	155	4.03	580		.0400	2.90	75	
154	12.2	155	4.02	580		.0401	2.88	68	
155	11.8	155	4.01	580		.0402	2.90	67	
156	20.1	160	4.02	580		.0401	5.88	84	
157	17.9	160	4.02	578		.0399	5.95	82	
158	15.8	160	4.02	582		.0402	5.93	79	
159	14.0	160	4.01	580		.0402	5.95	77	
160	11.9	160	4.00	582		.0404	5.98	71	
161	10.5	160	4.00	578		.0401	5.84	64	
162	24.2	160	4.04	703		.0486		82	
163	22.0	160	3.99	705		.0491		82	
164	20.2	160	4.02	709		.0490		82	
165	19.3	160	3.99	710		.0494		82	
166	24.2	160	4.02	706		.0488	3.78	84	
167	21.8	160	4.04	709		.0488	3.72	83	
168	20.0	160	4.04	706		.0486	3.48	80	
169	17.9	160	4.04	709		.0488	3.45	80	
170	16.3	160	4.02	704		.0487	3.23	79	
171	23.9	160	4.01	706		.0490	7.14	84	
172	21.7	160	4.01	709		.0491	7.08	83	
173	19.6	160	4.01	709		.0491	7.14	82	
174	17.9	155	4.02	709		.0490	7.12	81	
175	15.6	155	4.02	706		.0488	7.12	79	
176	13.9	155	4.03	706		.0486	7.18	78	
176	21.9	615	6.29	566		.0250		81	
177	19.9	615	6.31	566		.0249		78	
178	18.7	625	6.31	564		.0248		77	
179	22.0	615	6.29	568		.0251	2.72	84	
180	19.9	615	6.30	566		.0249	2.88	80	
181	17.9	615	6.31	566		.0249	2.91	76	
182	17.0	615	6.36	563		.0246	2.88	73	
183	22.0	615	6.30	566		.0250	5.68	84	
184	20.1	610	6.30	568		.0250	5.72	81	
185	17.9	610	6.30	566		.0250	5.85	76	
186	16.1	605	6.31	564		.0248	5.72	70	
187	22.1	620	6.27	678		.0300		89	
188	20.2	615	6.28	681		.0301		87	
189	19.0	610	6.28	680		.0301		85	
190	22.0	625	6.28	678		.0300	3.39	89	
191	20.0	615	6.34	675		.0296	3.39	86	
192	18.0	615	6.34	675		.0296	3.41	84	
193	16.8	615	6.34	677		.0297	3.41	79	
194	22.0	615	6.31	679		.0299	6.72	90	
195	19.9	615	6.30	679		.0299	6.82	88	
196	18.0	610	6.37	678		.0295	6.82	83	
197	16.8	610	6.32	678		.0298	6.82	81	
198	22.1	615	6.29	786		.0347		92	
199	19.9	615	6.28	790		.0349		89	
200	18.8	615	6.28	793		.0351		87	
201	22.2	625	6.29	790		.0349	3.96	93	
202	20.1	615	6.31	792		.0349	4.00	90	
203	17.8	615	6.31	790		.0348	4.05	86	
204	17.2	615	6.31	791		.0348	4.11	85	
205	22.1	610	6.29	787		.0347	7.92	93	
206	20.1	600	6.29	790		.0349	7.95	91	
207	18.0	610	6.29	790		.0349	8.00	88	

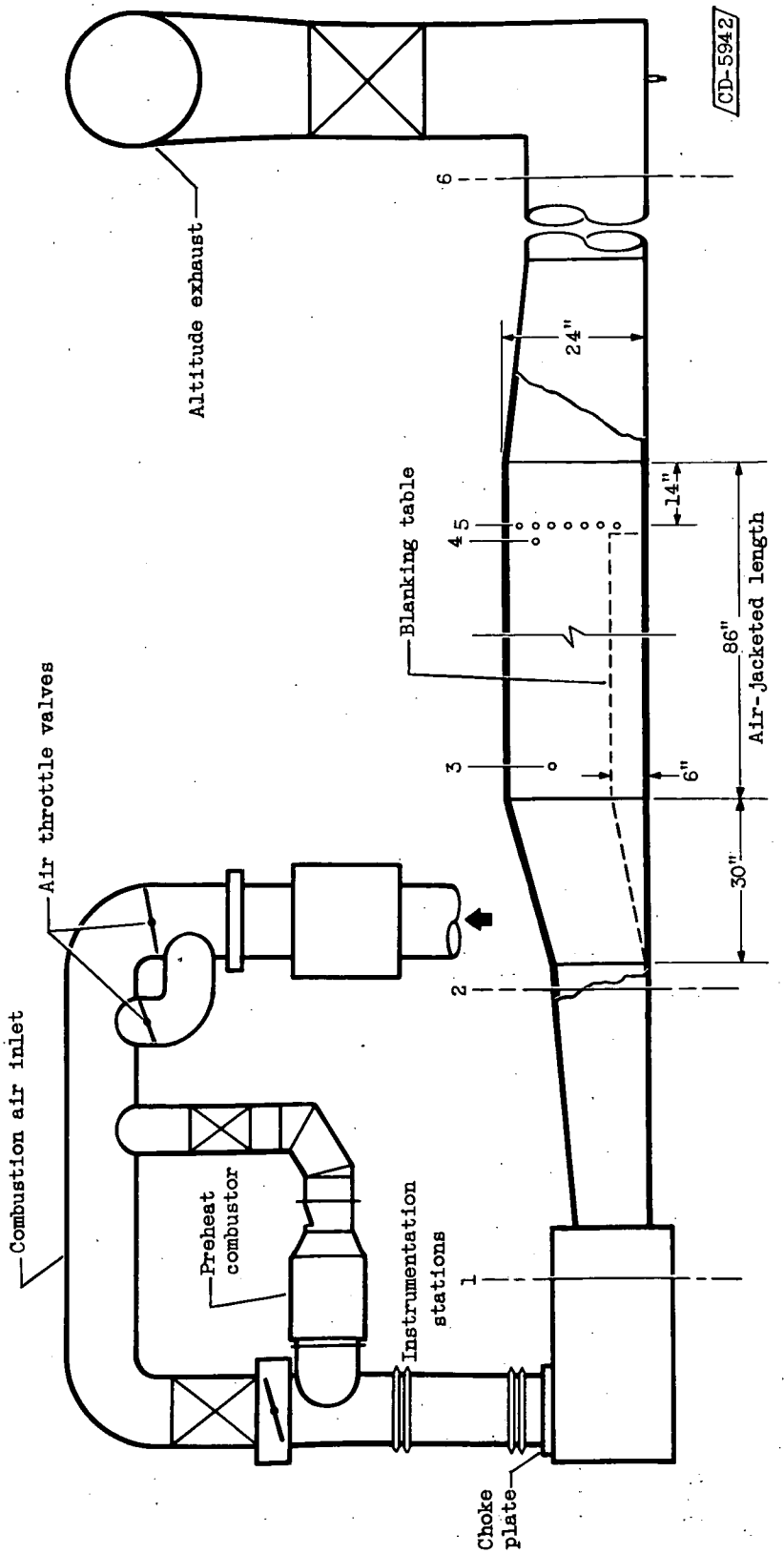

Figure 1. - Schematic diagram of combustor test facility.

DECLASSIFIED

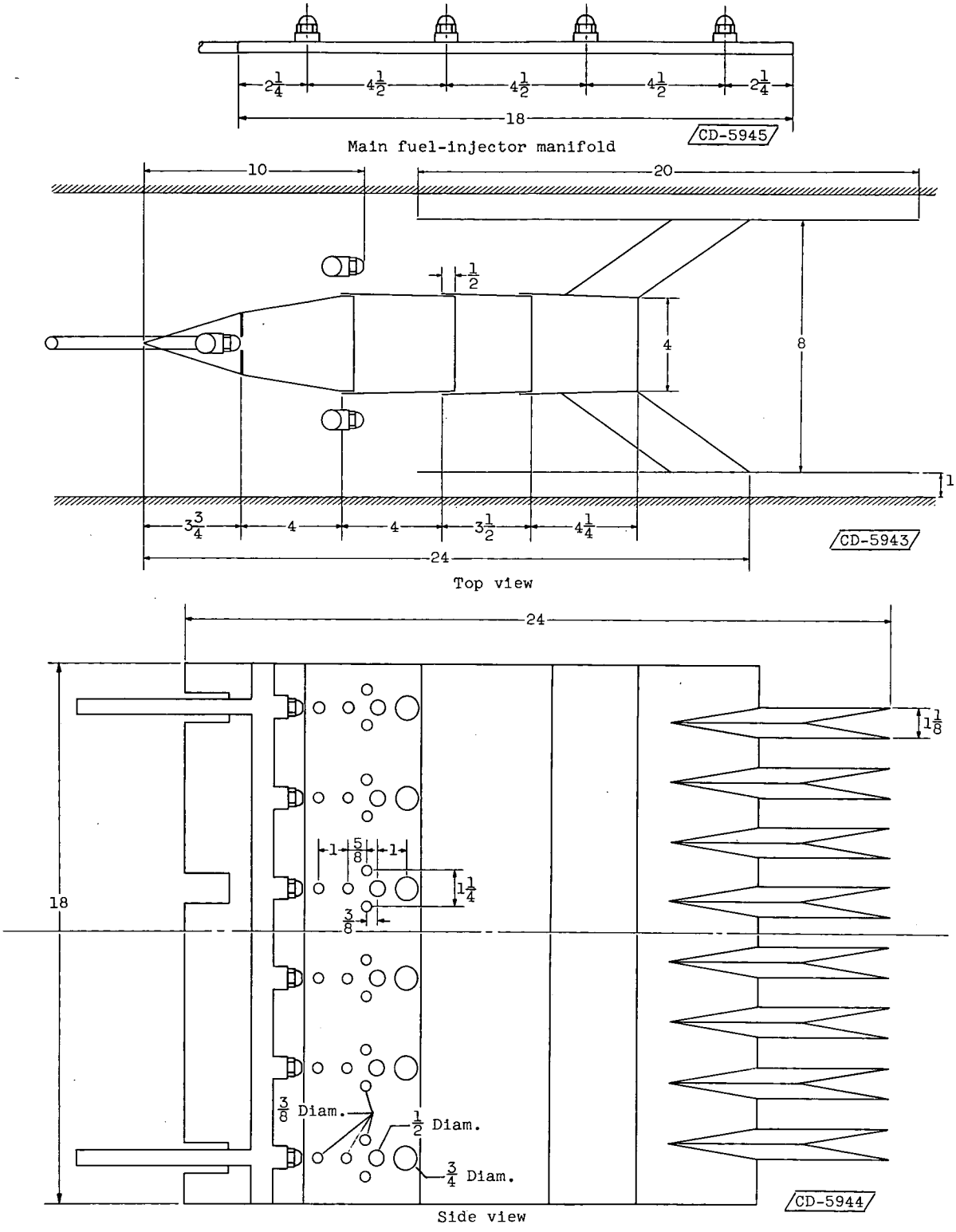

(a) Construction details. (All dimensions in inches.)

Figure 2. - Piloted combustor used for 10- by 18-inch duct installation.

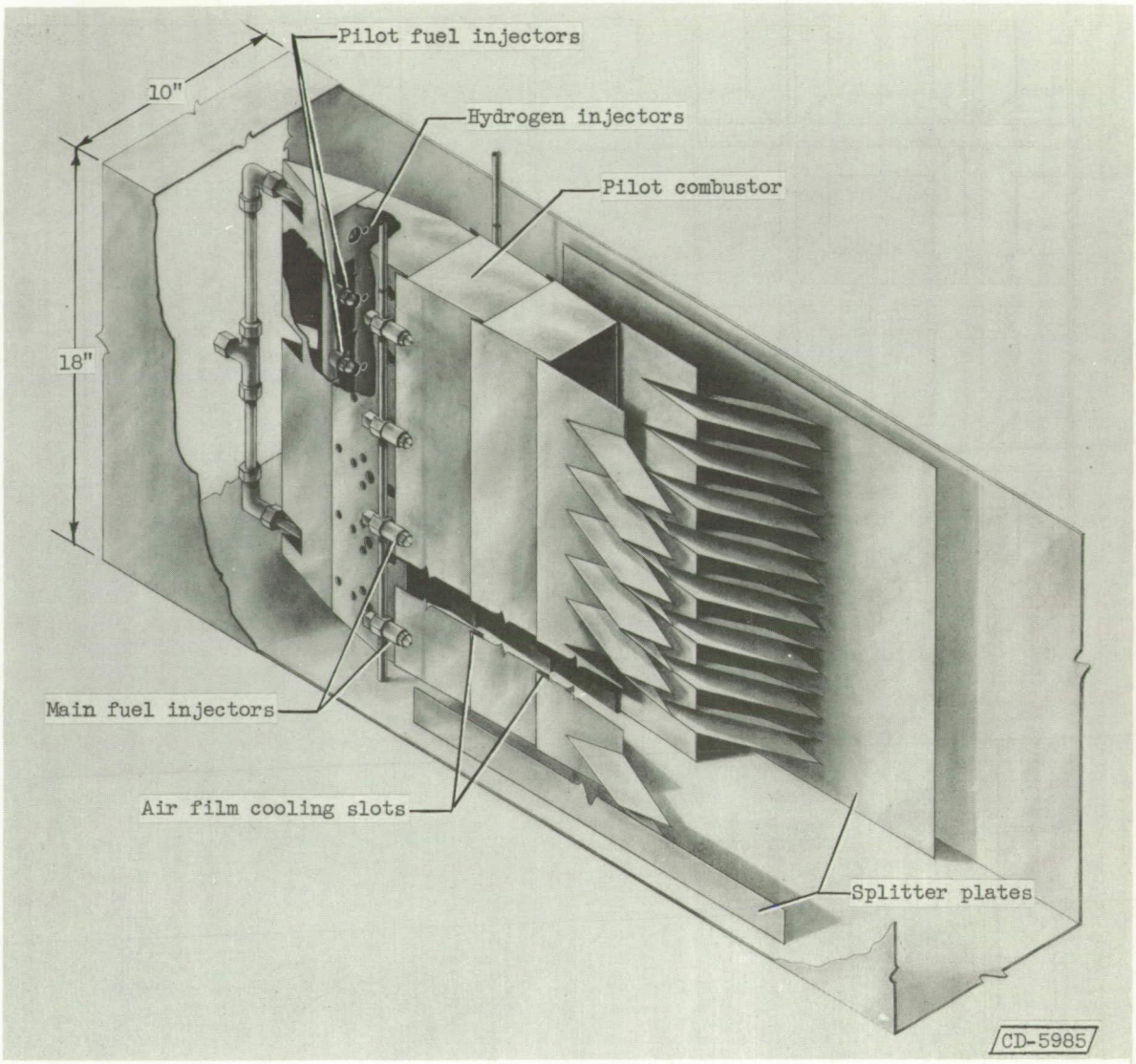

(b) Isometric view.

Figure 2. - Concluded. Piloted combustor used for 10- by 18-inch duct installation.

DECLASSIFIED

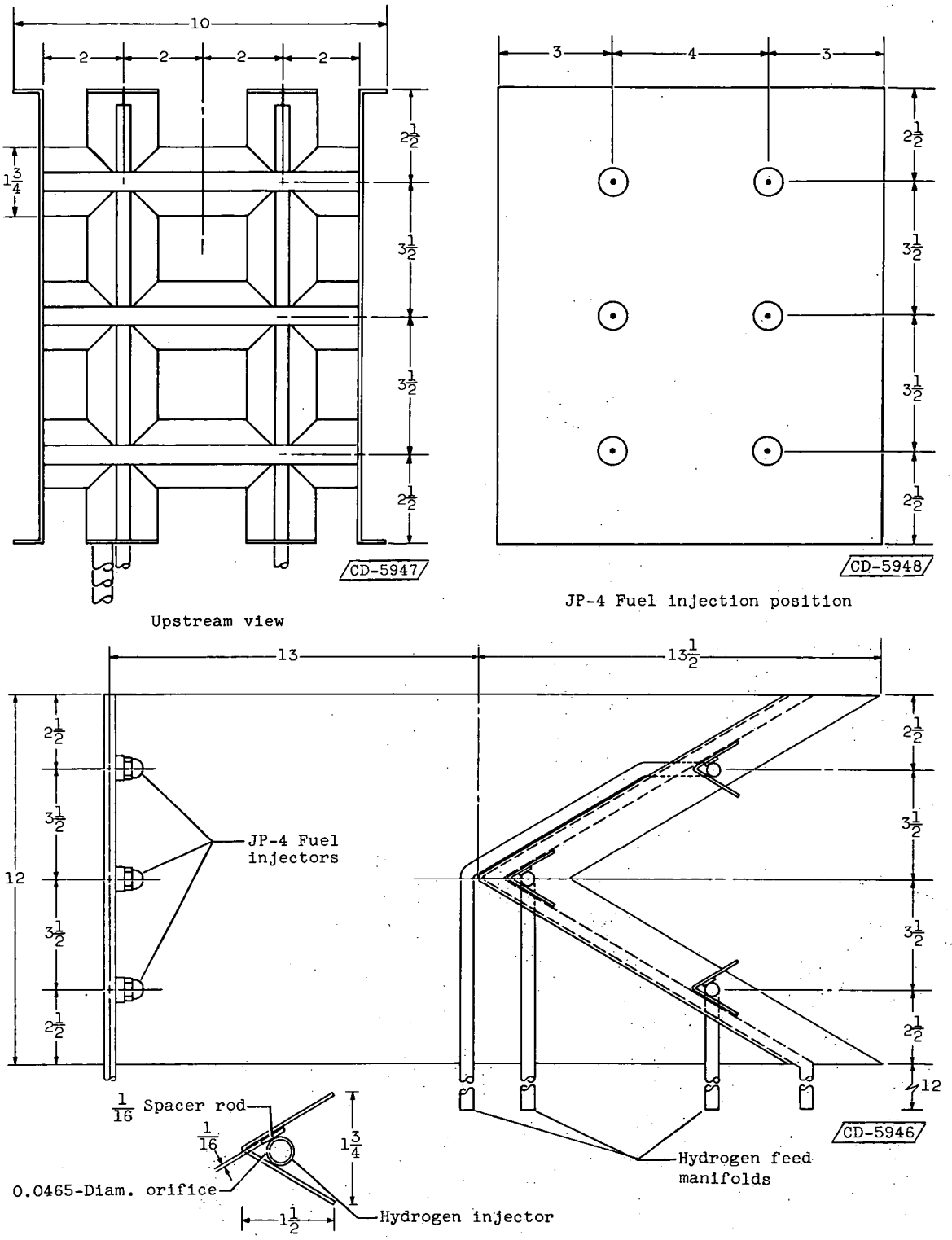

Figure 3. - Construction and installation details of sloping V-gutter combustor. (All dimensions in inches.)

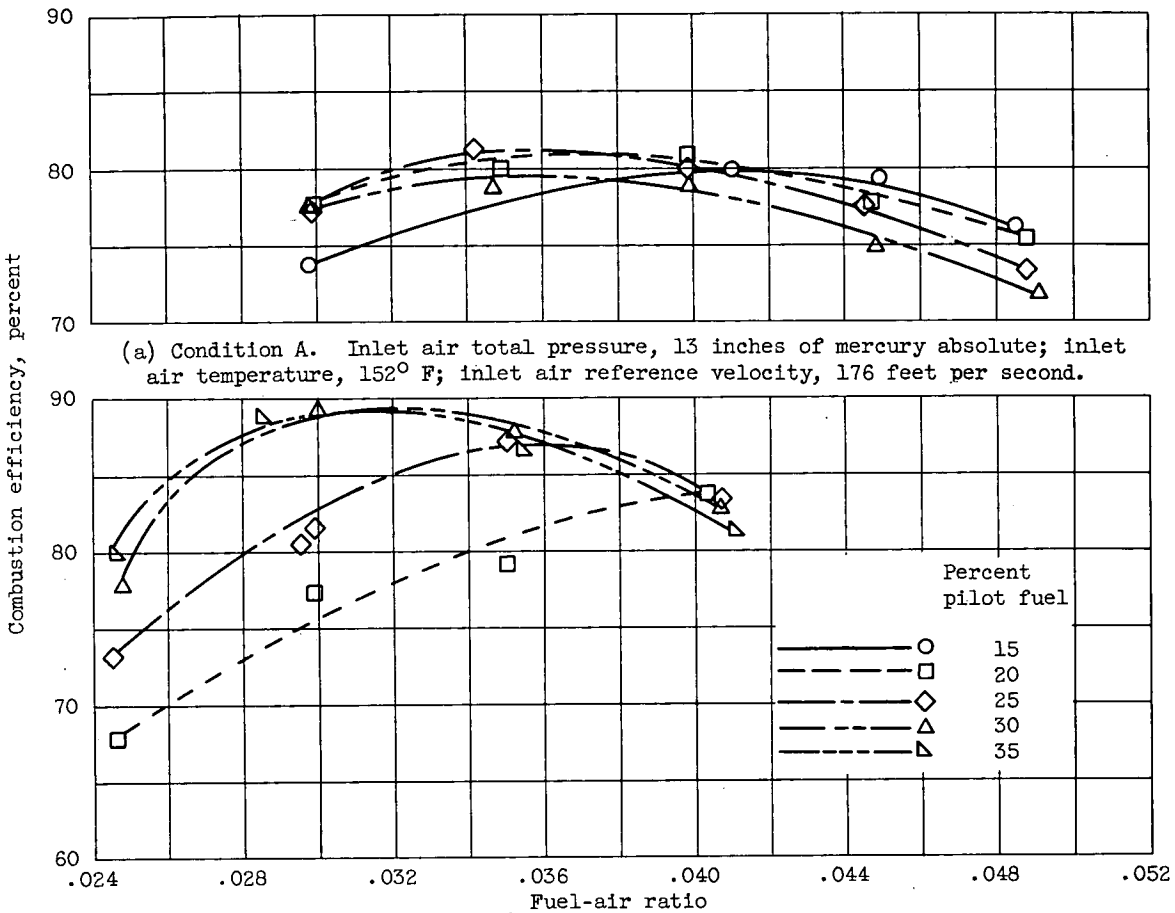

(a) Condition A. Inlet air total pressure, 13 inches of mercury absolute; inlet air temperature, 152° F; inlet air reference velocity, 176 feet per second.

(b) Condition B. Inlet air total pressure, 19 inches of mercury absolute; inlet air temperature, 610° F; inlet air reference velocity, 330 feet per second.

Figure 4. - Combustion efficiencies of a piloted combustor. Fuel, MIL-F-5624C, grade JP-4.

DECLASSIFIED

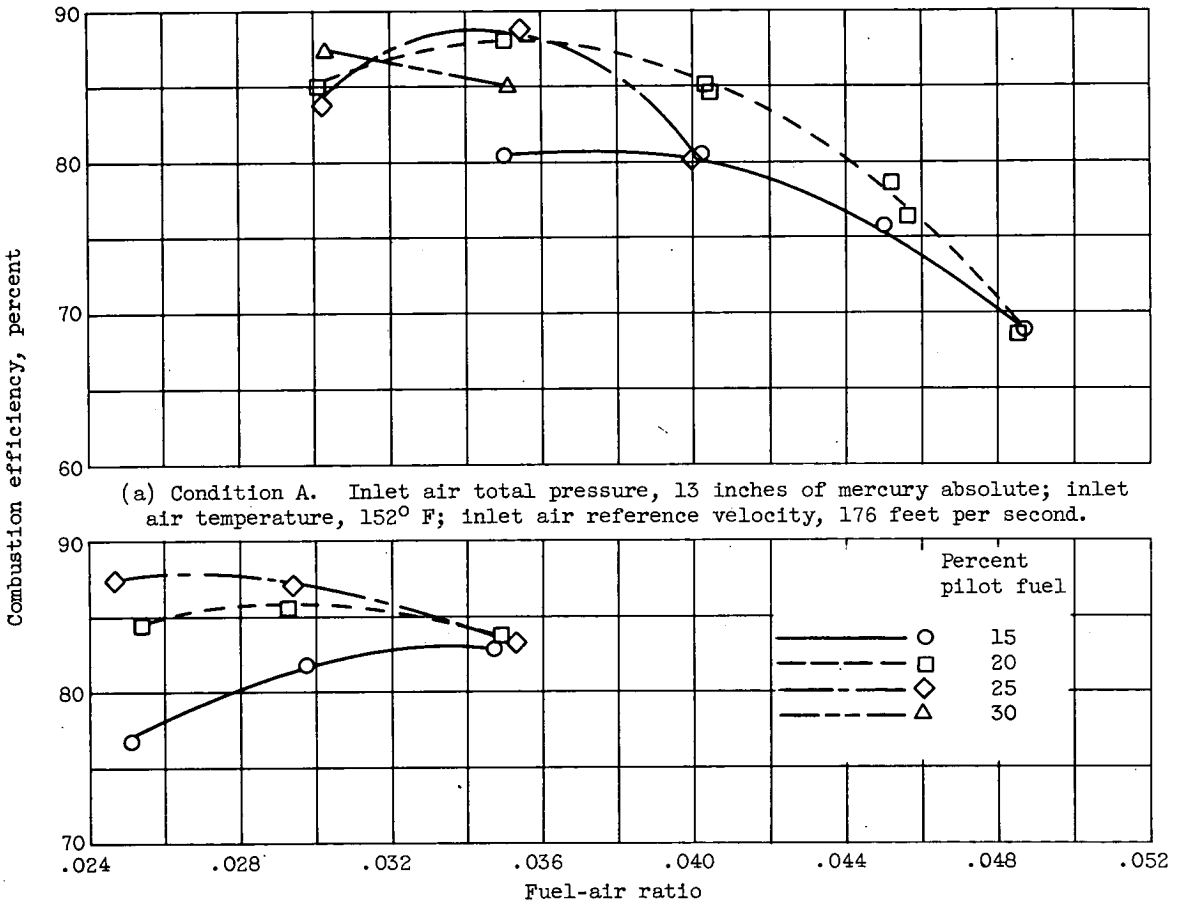

(a) Condition A. Inlet air total pressure, 13 inches of mercury absolute; inlet air temperature, 152° F; inlet air reference velocity, 176 feet per second.

(b) Condition B. Inlet air total pressure, 19 inches of mercury absolute; inlet air temperature, 610° F; inlet air reference velocity, 330 feet per second.

Figure 5. - Combustion efficiencies of a piloted combustor. Fuel, propane.

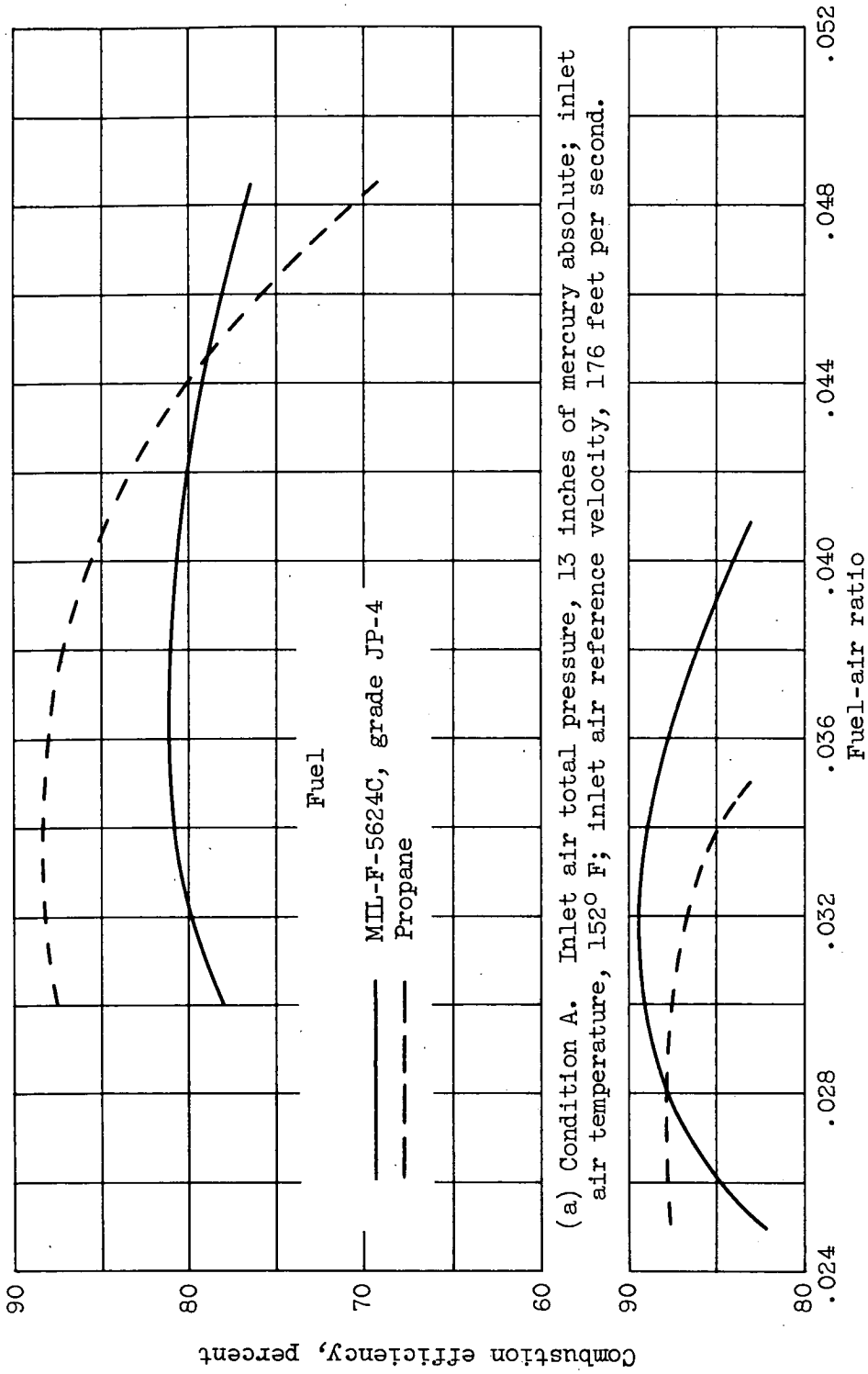

(a) Condition A. Inlet air total pressure, 13 inches of mercury absolute; inlet air temperature, 152° F; inlet air reference velocity, 176 feet per second.

(b) Condition B. Inlet air total pressure, 19 inches of mercury absolute; inlet air temperature, 610° F; inlet air reference velocity, 330 feet per second.

Figure 6. - Optimum combustion efficiencies of a piloted combustor with liquid and gaseous fuels.

DECLASSIFIED

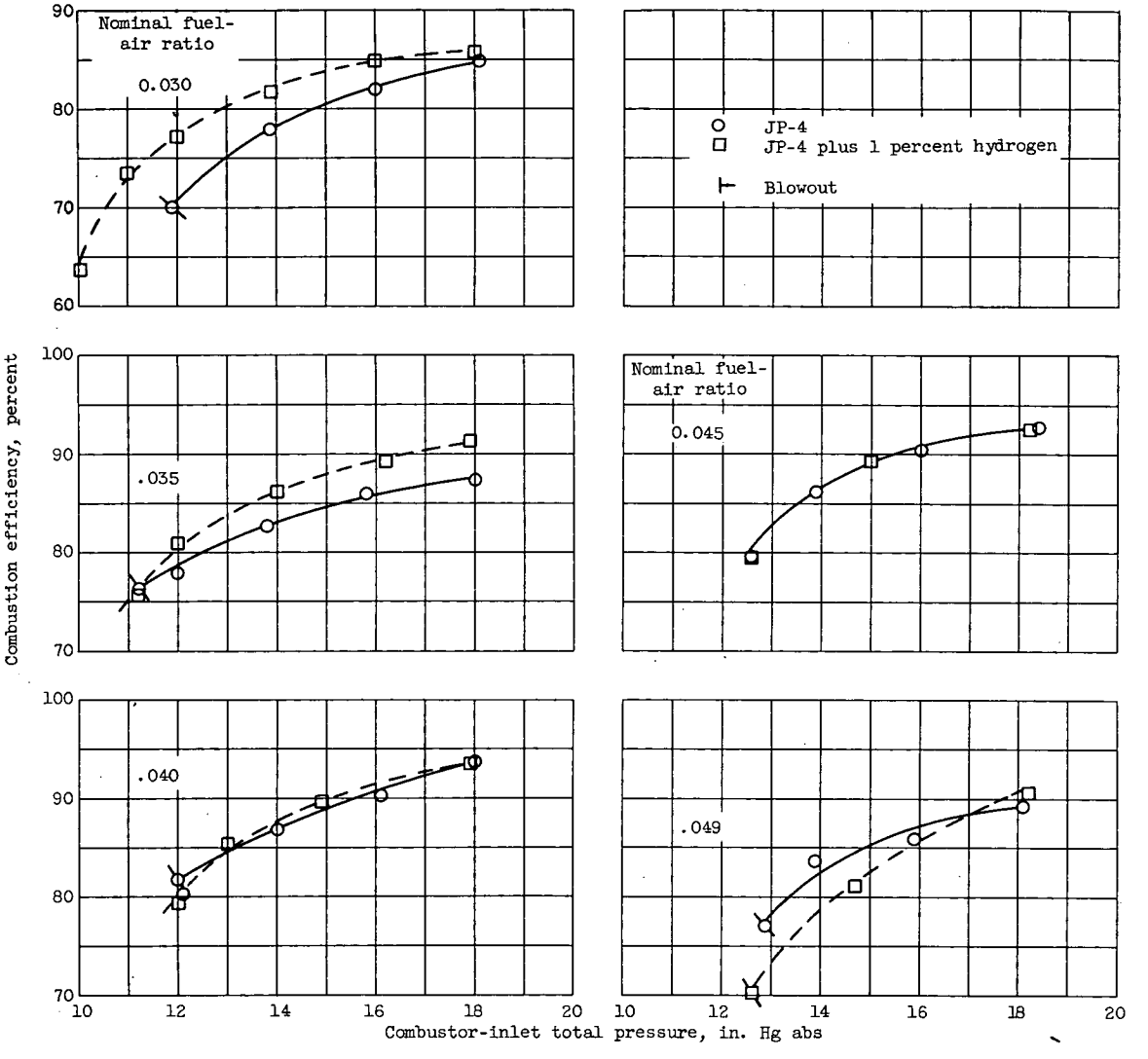

Figure 7. - Combustion efficiencies and blowout limits of a piloted combustor with and without hydrogen addition. Airflow, 6.07 pounds per second; inlet air temperature, 152° F; fuel, MIL-F-5624C, grade JP-4.

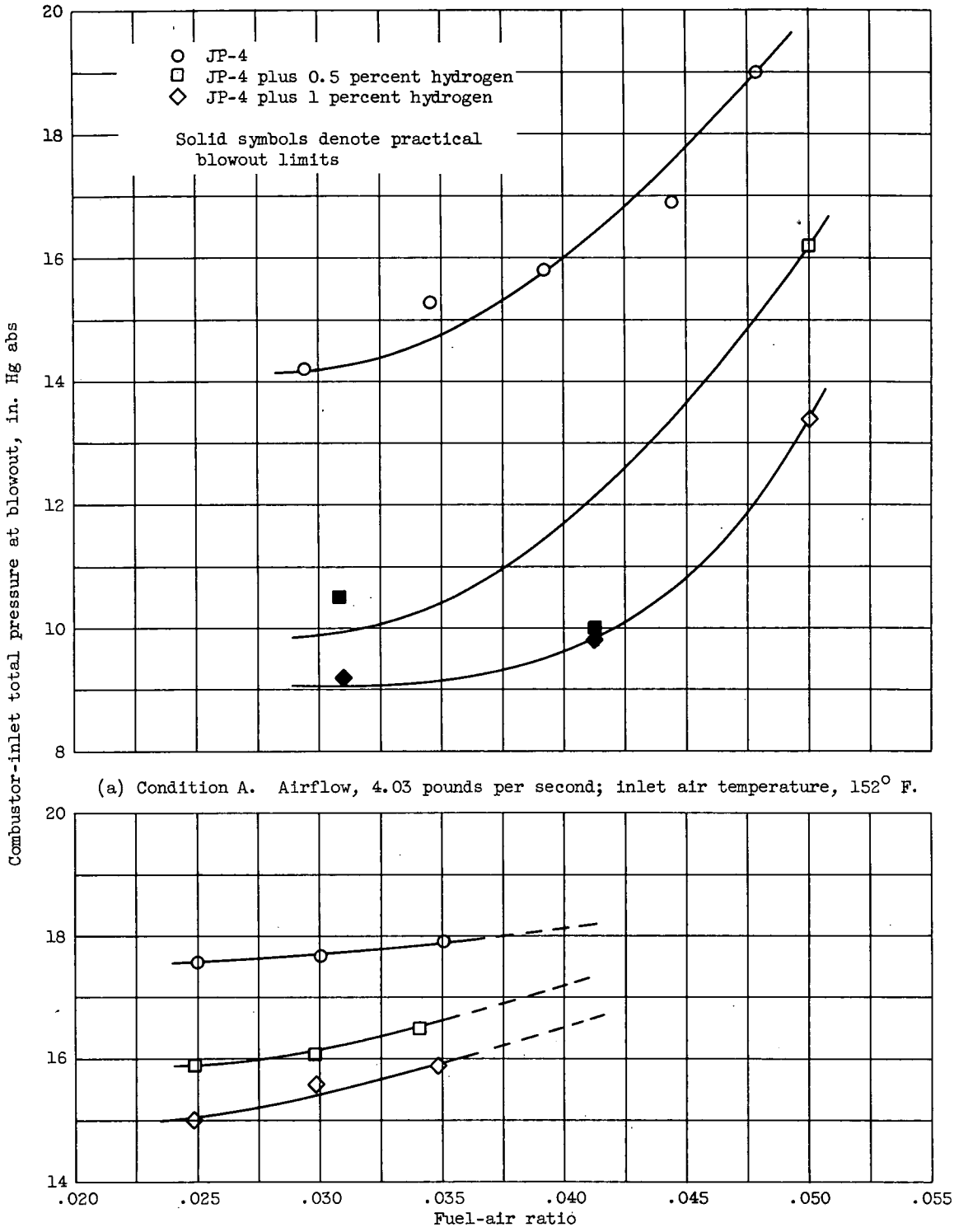

(a) Condition A. Airflow, 4.03 pounds per second; inlet air temperature, 152° F.

(b) Condition B. Airflow, 6.28 pounds per second; inlet air temperature, 610° F.

Figure 8. - Blowout limits of sloping V-gutter combustor with and without hydrogen addition. Fuel, MIL-F-5624C, grade JP-4.

DECLASSIFIED

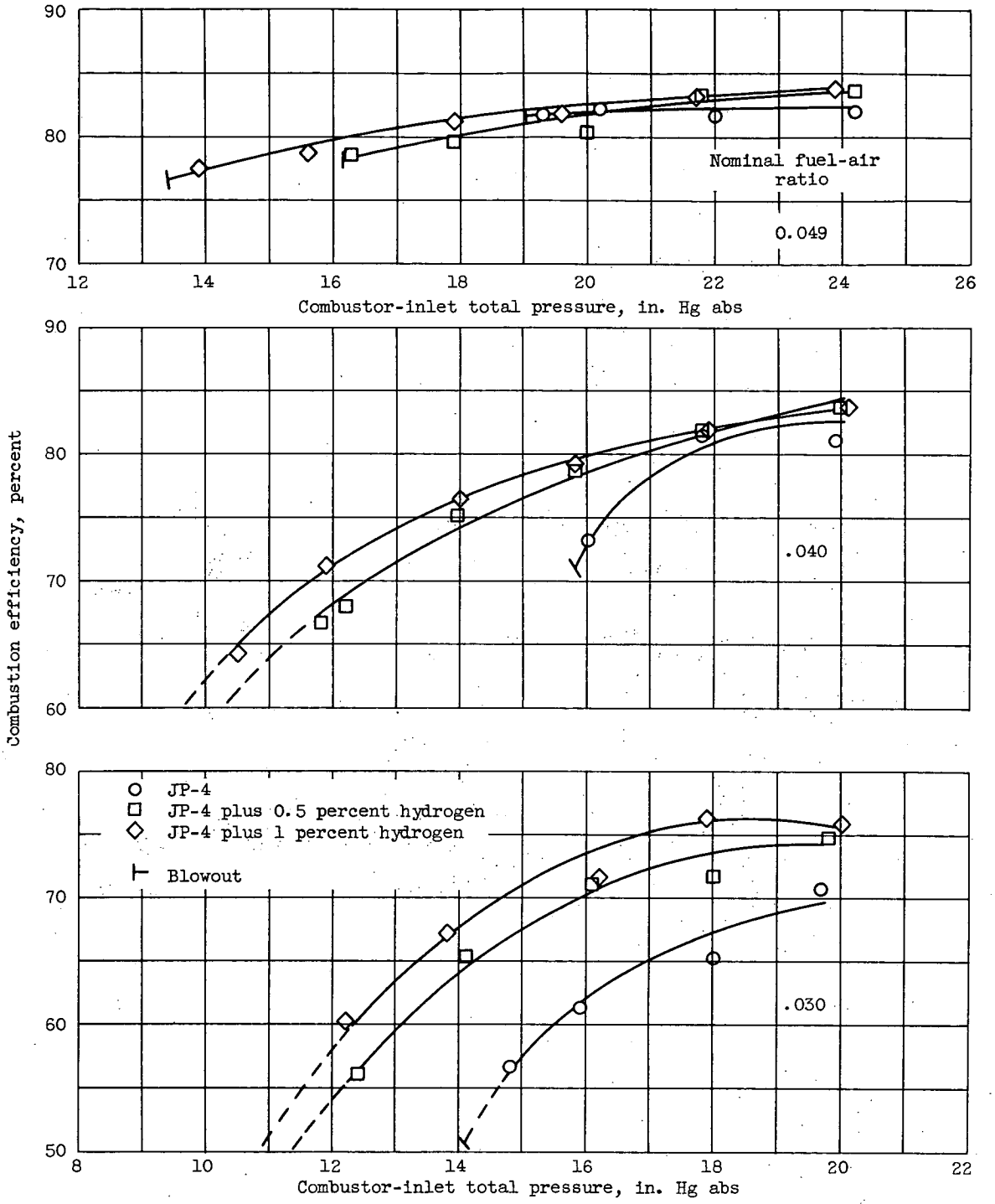

(a) Condition A. Airflow, 4.03 pounds per second; inlet air temperature, 152° F.

Figure 9. - Combustion efficiencies of sloping V-gutter combustor with and without hydrogen addition. Fuel, MIL-F-5624C, grade JP-4.

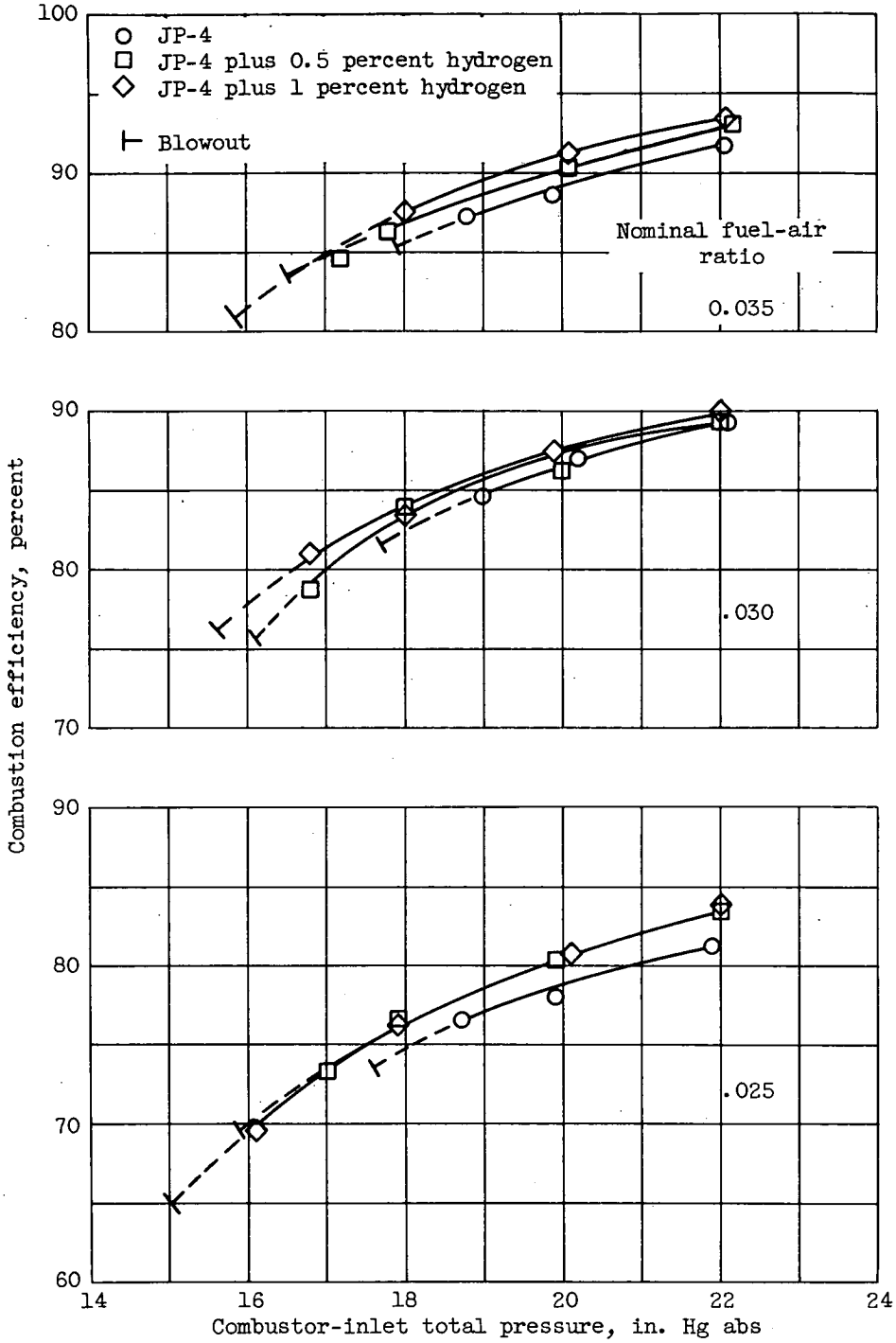

(b) Condition B. Airflow, 6.28 pounds per second; inlet air temperature, 610° F.

Figure 9. - Concluded. Combustion efficiencies of sloping V-gutter combustor with and without hydrogen addition. Fuel, MIL-F-5624C, grade JP-4.

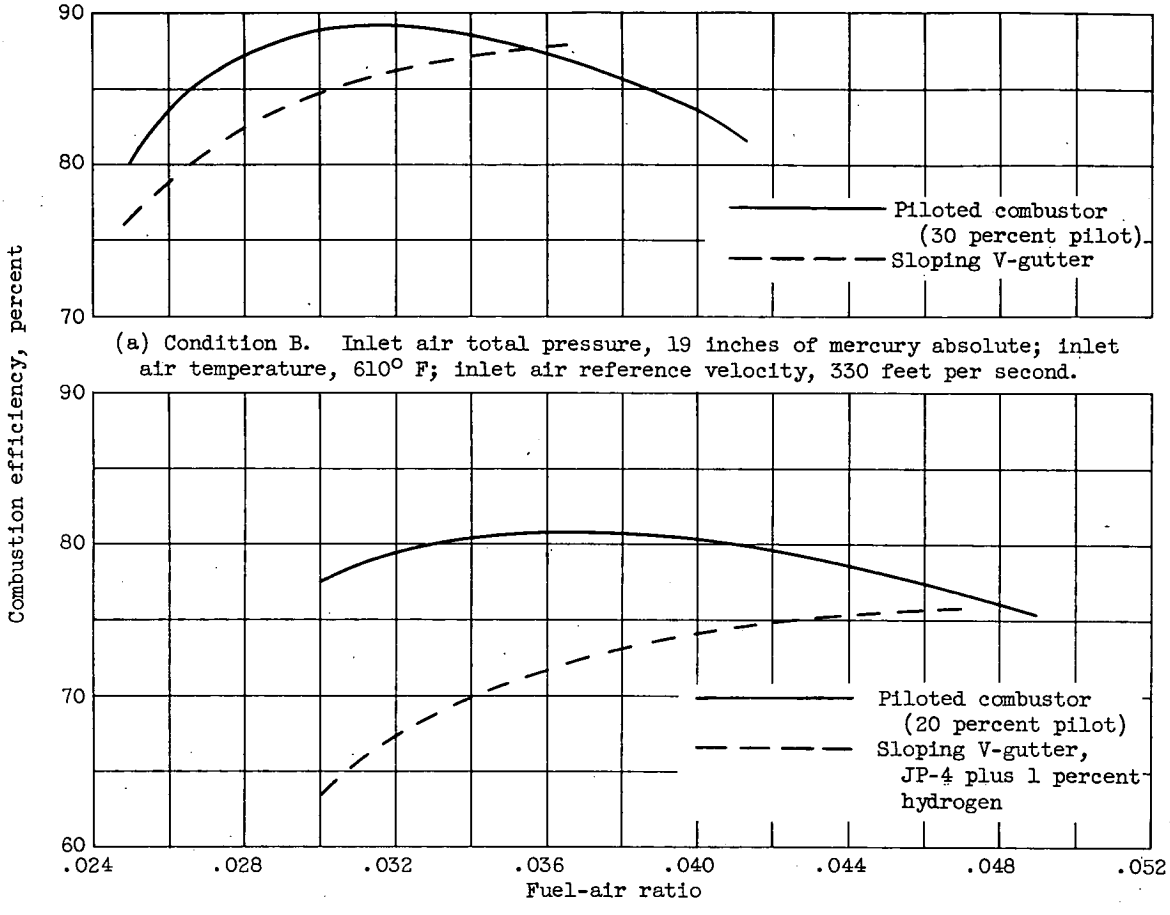

(a) Condition B. Inlet air total pressure, 19 inches of mercury absolute; inlet air temperature, 610° F; inlet air reference velocity, 330 feet per second.

(b) Condition A. Inlet air total pressure, 13 inches of mercury absolute; inlet air temperature, 152° F; inlet air reference velocity, 176 feet per second.

Figure 10. - Comparison of combustion efficiencies of piloted and sloping V-gutter combustors. Fuel, MIL-F-5624C, grade JP-4.

NACA - Langley Field, Va.

CONFIDENTIAL

CONFIDENTIAL