CONFIDENTIAL

COPY NO. 344

RM No. E8G16

NACA RM No. E8G16

NACA

RESEARCH MEMORANDUM

PRELIMINARY INVESTIGATION OF EFFECTS OF COMBUSTION IN RAM JET ON PERFORMANCE OF SUPERSONIC DIFFUSERS

II - PERFORATED SUPERSONIC INLET

By Albert H. Schroeder and James F. Connors

Lewis Flight Propulsion Laboratory
Cleveland, Ohio

REVIEWED BUT NOT EDITED

CLASSIFICATION CHANGED TO UNCLASSIFIED
AUTHORITY: RESEARCH ABSTRACT NO. 102

CLASSIFIED DOCUMENT

This document contains classified information affecting the National Defense of the United States within the meaning of the Espionage Act, USC 50:31 and 32. Its transmission or the revelation of its contents in any manner to an unauthorized person is prohibited by law. Information so classified may be imparted only to persons in the military and naval services of the United States, appropriate civilian officers and employees of the Federal Government who have a legitimate interest therein, and to United States citizens of known loyalty and discretion who of necessity must be informed thereof.

NATIONAL ADVISORY COMMITTEE FOR AERONAUTICS

WASHINGTON
October 4, 1948

CONFIDENTIAL

NATIONAL ADVISORY COMMITTEE FOR AERONAUTICS

RESEARCH MEMORANDUM

PRELIMINARY INVESTIGATION OF EFFECTS OF COMBUSTION IN RAM JET ON PERFORMANCE OF SUPERSONIC DIFFUSERS

II - PERFORATED SUPERSONIC INLET

By Albert H. Schroeder and James F. Connors

SUMMARY

A preliminary investigation has been conducted in the NACA Cleveland 20-inch supersonic tunnel at a Mach number of 1.92 with a 3.6-inch-diameter ram jet to determine the effects of combustion on the performance of a diffuser employing a perforated supersonic inlet. Variations in total-pressure recovery and Mach number distribution at the diffuser outlet with and without combustion are presented for a wide range of fuel flows and outlet areas.

As the outlet-inlet area ratio was increased from 0.51 to 0.86, the peak total-pressure recovery obtained with combustion decreased from 0.89 to 0.68 of the free-stream total pressure with a corresponding increase in fuel flow from 40 to 70 pounds per hour (fuel-air ratios, approximately 0.02 to 0.04). The cold peak total-pressure recovery of 0.90 was not attained with combustion. Visual observations substantiate the theory that normal-shock oscillation, initiated by pressure pulsations from the combustion process, is the cause of this rapid decrease in peak total-pressure recovery. This effect for the perforated inlet was very nearly the same as that previously reported for a shock diffuser. Mach number distributions at the diffuser outlet were not appreciably affected by combustion when compared on the basis of equal total-pressure recovery.

INTRODUCTION

An investigation to determine the effects of combustion in a ram jet on the performance of supersonic diffusers is being conducted at the NACA Cleveland laboratory. The results obtained at a Mach number of 1.92 with a shock diffuser employing a triple-shock projecting cone are presented in reference 1. The peak

total-pressure recovery obtained by varying the outlet area decreased very rapidly with increasing fuel-air ratio (from 0.91 to 0.67 of the free-stream total pressure as the fuel-air ratio increased from approximately 0.02 to 0.05). The cold peak total-pressure recovery of 0.92 was not attained with combustion.

In order to determine whether this phenomenon would be influenced by a diffuser with different operating characteristics, a perforated supersonic inlet was employed in the present study. Unlike the shock diffuser, this type of inlet utilizes only internal compression and has no central body. The total-pressure recovery and the Mach number distribution at the diffuser outlet were studied in evaluating the diffuser performance.

APPARATUS AND PROCEDURE

This investigation was conducted in the 20-inch supersonic tunnel, which was operated at a Mach number of 1.92 ±0.04. Dry heated air was used and maintained at a dew point of $-15^{\circ} \pm 10^{\circ}$ F and a total temperature of $220^{\circ} \pm 5^{\circ}$ F.

A schematic diagram of the experimental ram jet, which was the same as that used in reference 1 except for the diffuser configuration, is shown in figure 1(a). The conical flame holder (fig. 1(b)) and the variable-outlet-area nozzle (fig. 1(c)) were also used. An acetylene pilot system was used to ignite the main fuel (unleaded 62-octane gasoline), which was injected in an upstream direction through a 12-gallon-per-hour diffusing spray nozzle (rated at 100 lb/sq in. gage) located in the subsonic diffuser. Fuel-flow rates were indicated by a rotameter, and pressures at the diffuser outlet were measured on a pitot-static rake (fig. 1(d)).

A perforated supersonic inlet with a contraction ratio of 1.49 was used in combination with a 6° subsonic diffuser. The contour of the supersonic inlet is indicated in figure 2(a) by a plot of the cross-section - throat area ratio as a function of the distance from the diffuser inlet. The ratio of a summation of the perforated hole area to the throat area is shown in figure 2(b) as a function of distance from the diffuser inlet.

A simple shadowgraph was installed inside the tunnel to allow visual observation of the shock pattern at the diffuser inlet. The air flow through the combustion chamber was estimated at 1740 pounds per hour when supersonic flow was established at the diffuser throat.

RESULTS AND DISCUSSION

Symbols. - The following symbols are used in this discussion:

A_i diffuser-inlet area

A_4 projected ram-jet outlet-nozzle area normal to free stream

M_3 Mach number at diffuser outlet (combustion-chamber inlet)

P_0 free-stream total pressure

P_3 total pressure at diffuser outlet (combustion-chamber inlet)

W_f fuel-flow, pounds per hour

Total-pressure recovery without combustion. - At a Mach number of 1.85, the cold-run performance of a perforated supersonic inlet (reference 2) indicated a peak total-pressure recovery of 0.93. In order to establish a reference with which to compare these results obtained with combustion in the present study, a cold run was conducted at a Mach number of 1.92 with a similar type of inlet. The variation of total-pressure recovery P_3/P_0 with outlet-inlet area ratio A_4/A_i is presented in figure 3. The peak P_3/P_0 of 0.90 is lower than that reported for the inlet in reference 2, as would be expected with increased shock losses at the higher Mach number.

Total-pressure recovery with combustion. - When the normal shock is located in the subsonic part of the diffuser, the addition of heat to the combustion chamber moves the shock toward the throat of the diffuser and results in an increased total-pressure recovery. The optimum total-pressure recovery is realized when the normal shock is positioned near the throat of the diffuser by either increased heating or decreased outlet area. In this study the total-pressure recovery is experimentally evaluated as a function of both fuel flow and outlet area.

The variation of total-pressure recovery P_3/P_0 with fuel flow W_f for several constant outlet-inlet area ratios A_4/A_i is shown in figure 4. As W_f was increased from the value at which combustion was initiated, P_3/P_0 increased to a peak value for each A_4/A_i and then decreased very rapidly. The peak P_3/P_0 decreased from 0.89 at 40 pounds of fuel per hour (fuel-air ratio, approximately 0.02) to 0.68 at 70 pounds of fuel per hour (fuel-air

ratio, approximately 0.04) as A_4/A_1 increased from 0.51 to 0.86. Visual observations of the flame in the combustion chamber and at the outlet nozzle indicated that rough and unstable combustion occurred when the fuel flow was increased from the value at the peak P_3/P_0. Simultaneously, the oblique shock from the inlet became blurred and thus indicated movement of the normal shock in and out of the inlet.

These results appear to substantiate the theory presented in reference 1 that normal-shock oscillation, initiated by pressure pulsations from a coupled unsteady combustion process, is the reason for the rapid decrease in peak total-pressure recoveries with increasing outlet area. Any such oscillation prevents location of the normal-shock at its optimum steady-state position in the diffuser and consequently results in a lower peak total-pressure recovery than that attainable with steady-flow conditions. These recorded peak recoveries thus represent mean values within the limits of the pressure fluctuations caused by this oscillatory cycle and lie somewhere between the optimum cold value and the cold value for the given outlet-inlet area ratio. At a constant outlet-inlet area ratio, the moderate increase in total-pressure recovery above the cold-run value indicates, from one-dimensional steady-state considerations, that the temperature rise from the combustion process was low. Any estimate based on the recorded values of total-pressure recovery, however, will not give the maximum magnitude of the temperature rise during the shock oscillation but will give some intermediate value.

The variation of P_3/P_0 with A_4/A_1 for three constant fuel flows is shown in figure 5 along with the reference curve (without combustion) from figure 3. For each fuel flow, P_3/P_0 increased to a peak value as A_4/A_1 decreased from the maximum position for which combustion could be maintained. With further decrease in A_4/A_1, P_3/P_0 decreased and dropped below the reference curve. Rough and unstable combustion and a blurred oblique shock at the inlet were observed when A_4/A_1 was decreased from the peak P_3/P_0; these observations were similar to those made when the fuel flow was increased from the peak P_3/P_0 (fig. 4). Again, normal-shock oscillation would account for the drop in peak P_3/P_0 from 0.89 to 0.75 as the fuel flow increased from 40 to 60 pounds per hour.

A summary plot of the peak total-pressure recovery obtained from constant-outlet-area and constant-fuel-flow runs (figs. 4 and 5)

is presented in figure 6 as a function of outlet-inlet area ratio along with the reference curve. The peak P_3/P_0 decreased rather rapidly as A_4/A_i increased. The curve for the shock diffuser (reference 1), replotted herein for comparison, had very nearly the same slope, which indicates that the effect of the normal-shock oscillation on peak total-pressure recovery is nearly the same for both the perforated and shock diffusers.

Mach number distribution at diffuser outlet. - Mach number distributions at the diffuser outlet with and without combustion are presented in figure 7 for several values of total-pressure recovery P_3/P_0. Experimental-data points have been omitted in order to alleviate confusion among the curves. Combustion produced little or no effect upon the Mach number distribution when compared on the basis of equal total-pressure recovery, as was also indicated for the shock diffuser in reference 1. The curves both with and without combustion follow the same trend.

For the perforated supersonic inlet, the characteristic variation in Mach number distribution with total-pressure recovery P_3/P_0 is of interest. At the peak values of P_3/P_0, the combustion-chamber Mach number M_3 was a maximum at the center and decreased toward the walls. As P_3/P_0 was slightly decreased, the Mach number distribution became uniform with little variation in M_3 across the combustion chamber, except near the walls. With further decreases in P_3/P_0, the curves are shifted to progressively higher average M_3 levels with correspondingly steeper Mach number gradients between the walls and the center of the combustion chamber.

SUMMARY OF RESULTS

An investigation to determine the effects of combustion in a 3.6-inch-diameter ram jet on the performance of a diffuser employing a perforated supersonic inlet gave the following results at a Mach number of 1.92:

1. The peak total-pressure recovery decreased from 0.89 to 0.68 as the outlet-inlet area ratio increased from 0.51 to 0.86 with a corresponding increase in fuel flow from 40 to 70 pounds per hour (fuel-air ratios, approximately 0.02 to 0.04). The peak total-pressure recovery of 0.90 attained without combustion was not realized with combustion.

2. Whenever the fuel flow was increased or the outlet area was decreased from the conditions of peak total-pressure recovery, rough and unstable combustion was observed, with a simultaneous vibratory-shock pattern at the diffuser inlet. These observations tend to substantiate the theory that normal-shock oscillation, initiated by pressure pulsations from the combustion process, is the cause of the rapid decrease in peak total-pressure recoveries.

3. With combustion, the variation of peak total-pressure recovery with outlet-inlet area ratio approximated that previously reported for the shock diffuser.

4. Combustion produced little or no variation in the Mach number distribution at the diffuser outlet when compared on the basis of equal total-pressure recovery.

Lewis Flight Propulsion Laboratory,
National Advisory Committee for Aeronautics,
Cleveland, Ohio.

REFERENCES

1. Connors, J. F., and Schroeder, A. H.: Preliminary Investigation of Effects of Combustion in Ram Jet on Performance of Supersonic Diffusers. I - Shock Diffuser with Triple-Shock Projecting Cone. NACA RM No. E8F15, 1948.

2. Evvard, John C., and Blakey, John W.: The Use of Perforated Inlets for Efficient Supersonic Diffusion. NACA RM No. E7C26, 1947.

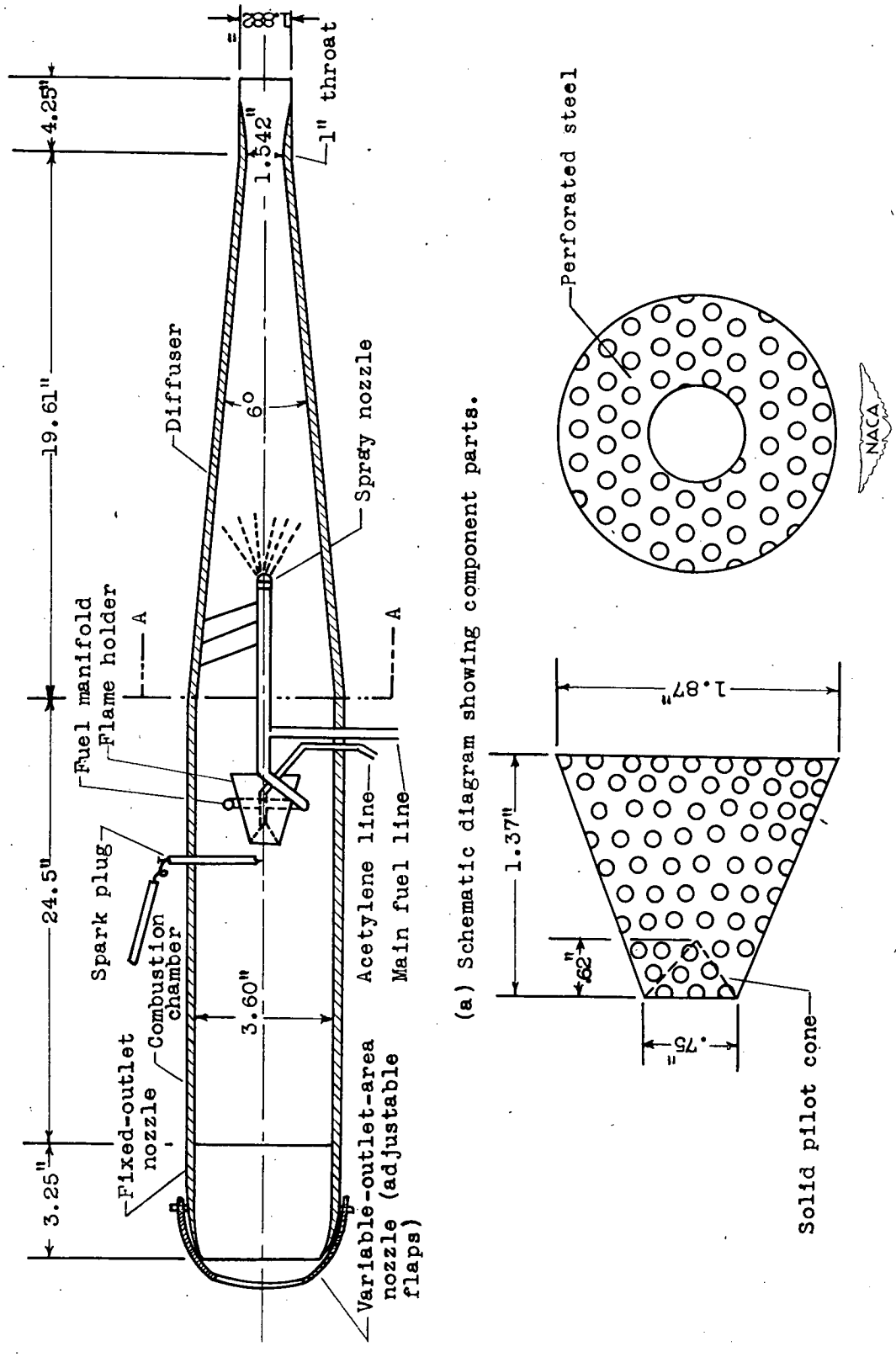

(a) Schematic diagram showing component parts.

(b) Flame-holder details.

Figure 1. - Experimental ram-jet model.

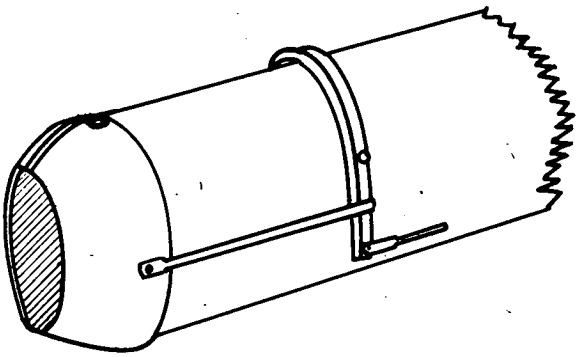

(c) Variable-outlet-area nozzle.

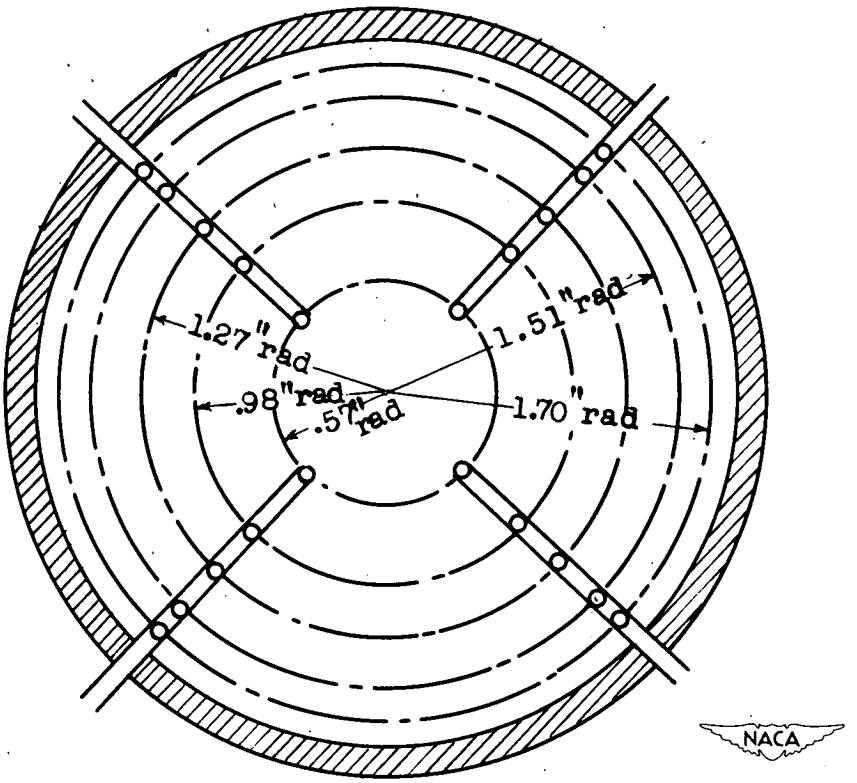

(d) Pitot-static survey rake located at cross section A-A (fig. 1(a)).

Figure 1. - Concluded. Experimental ram-jet model.

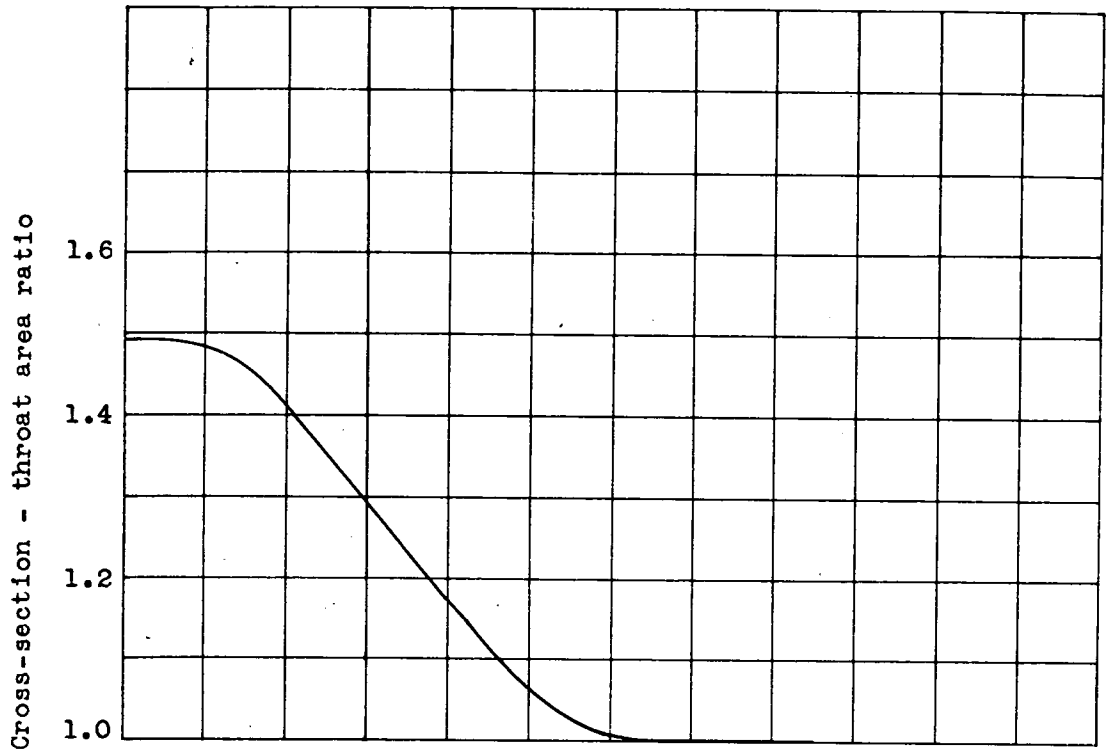

(a) Cross-section - throat area ratio.

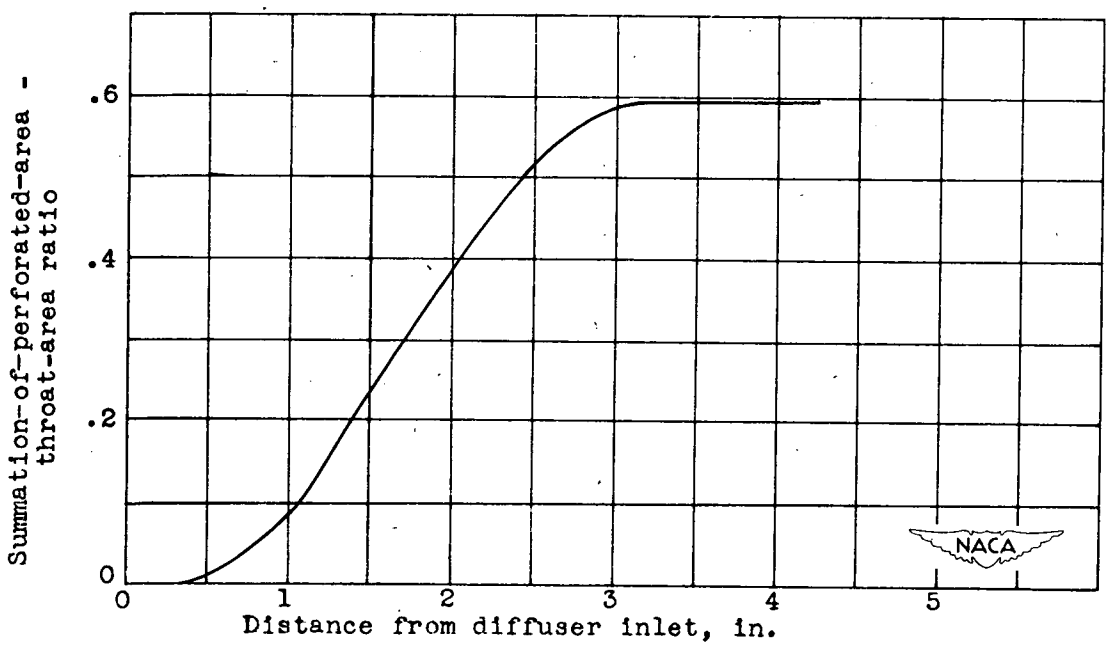

(b) Summation-of-perforated-area - throat-area ratio.

Figure 2. - Design characteristics of inlet contour and perforations as function of distance from diffuser inlet.

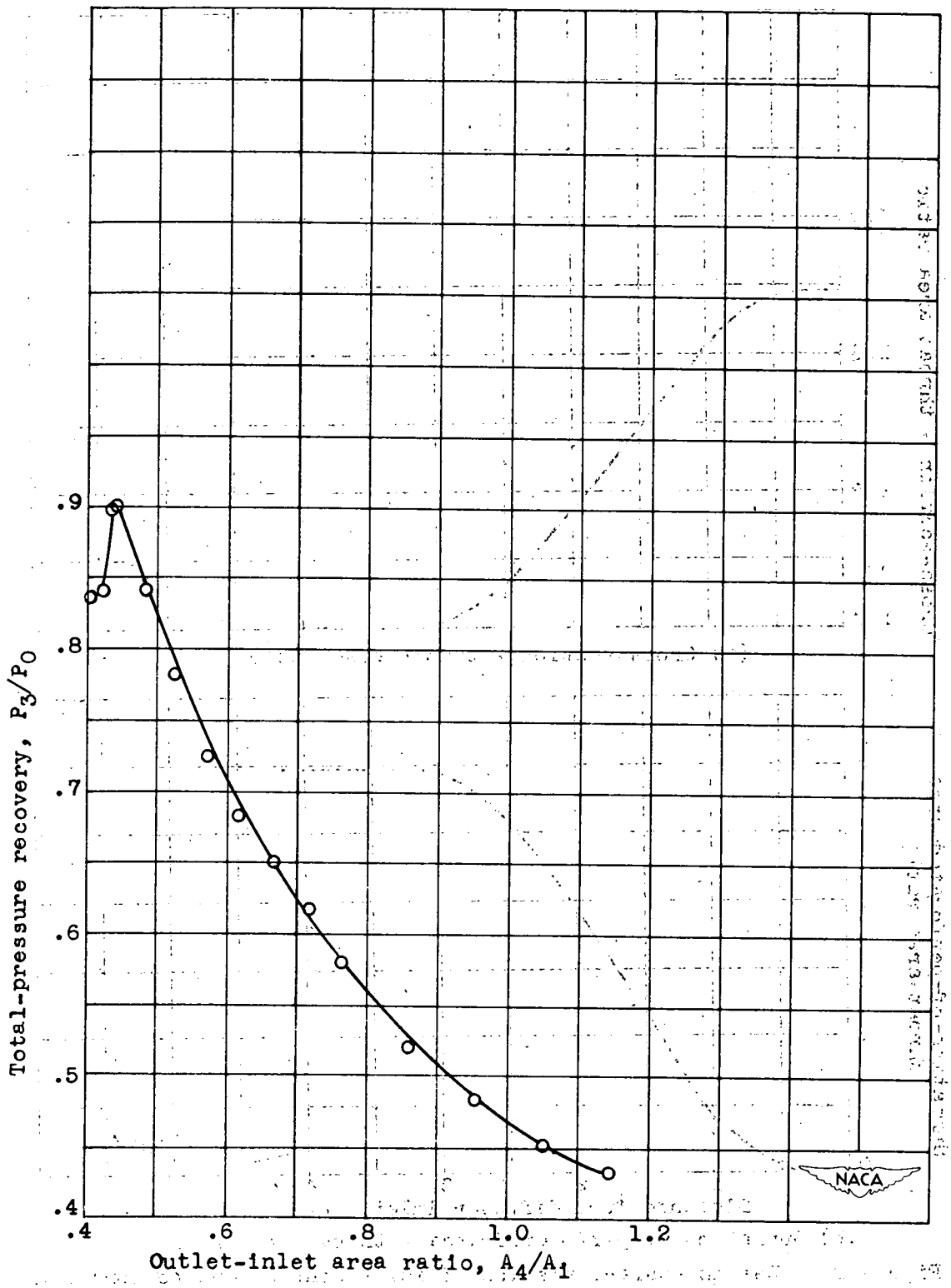

Figure 3. - Variation of total-pressure recovery with outlet-inlet area ratio without combustion.

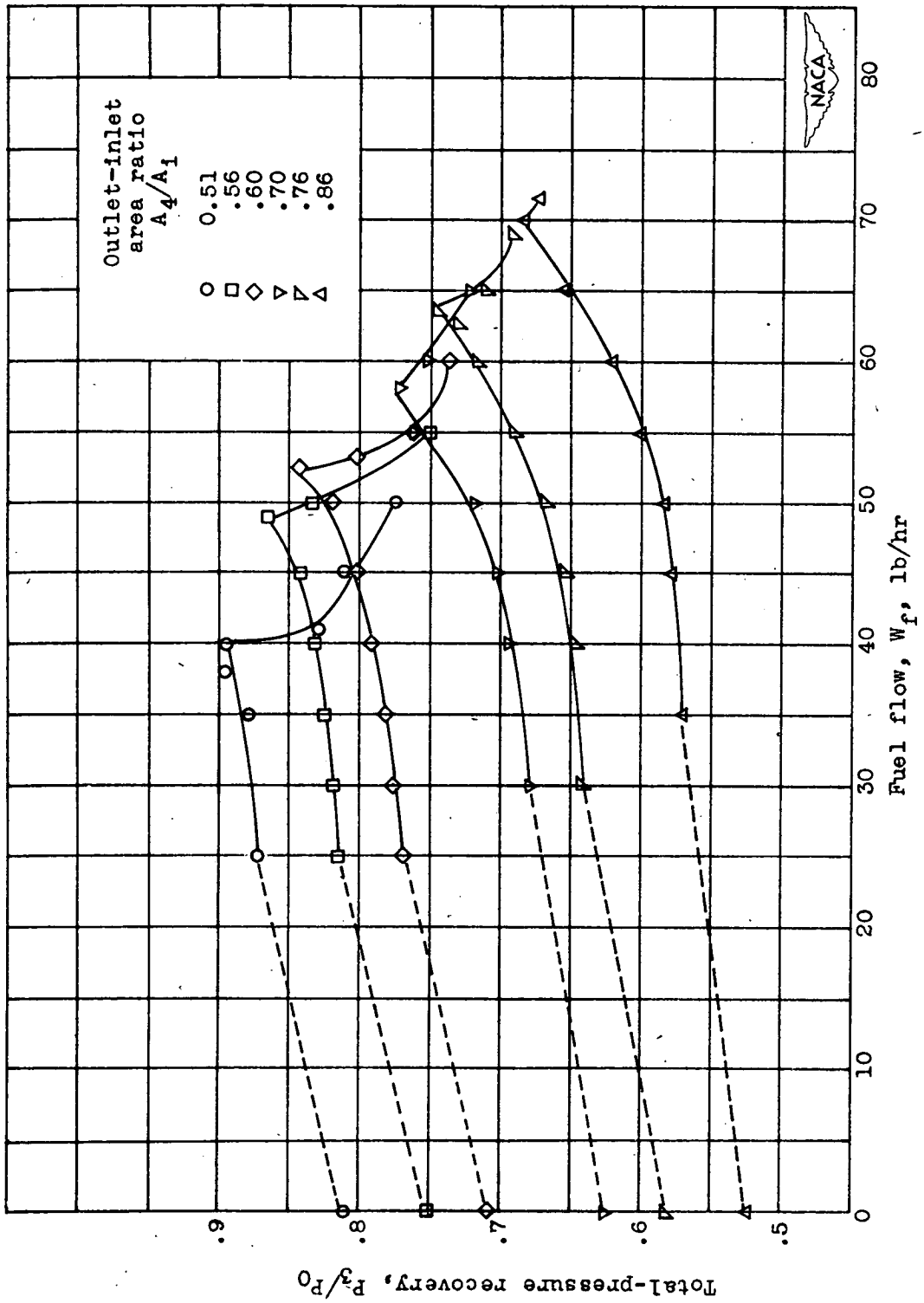

Figure 4. - Effect of fuel flow on total-pressure recovery for constant outlet-inlet-area ratios.

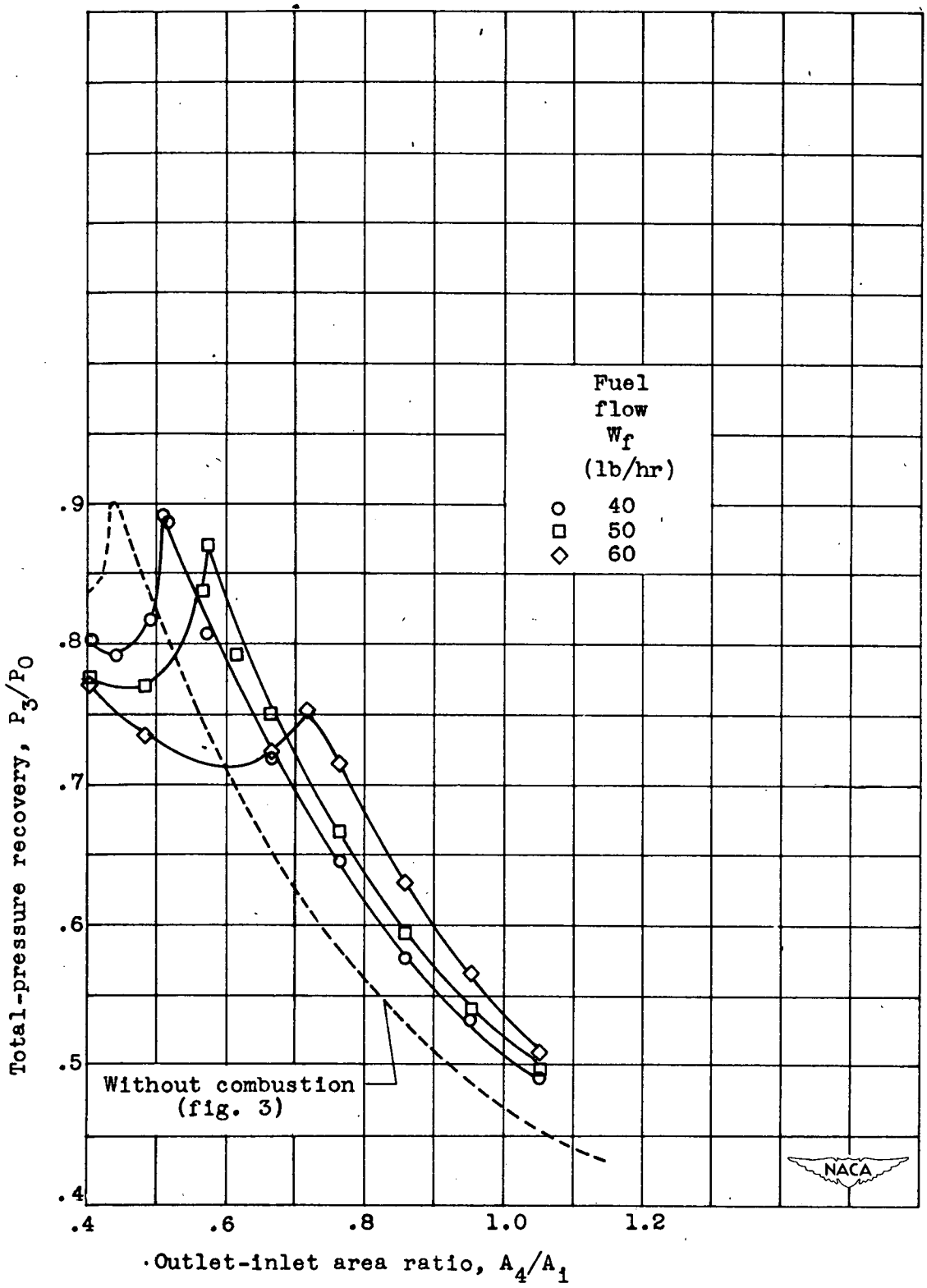

Figure 5. - Variation of total-pressure recovery with outlet-inlet area ratio for constant fuel flows.

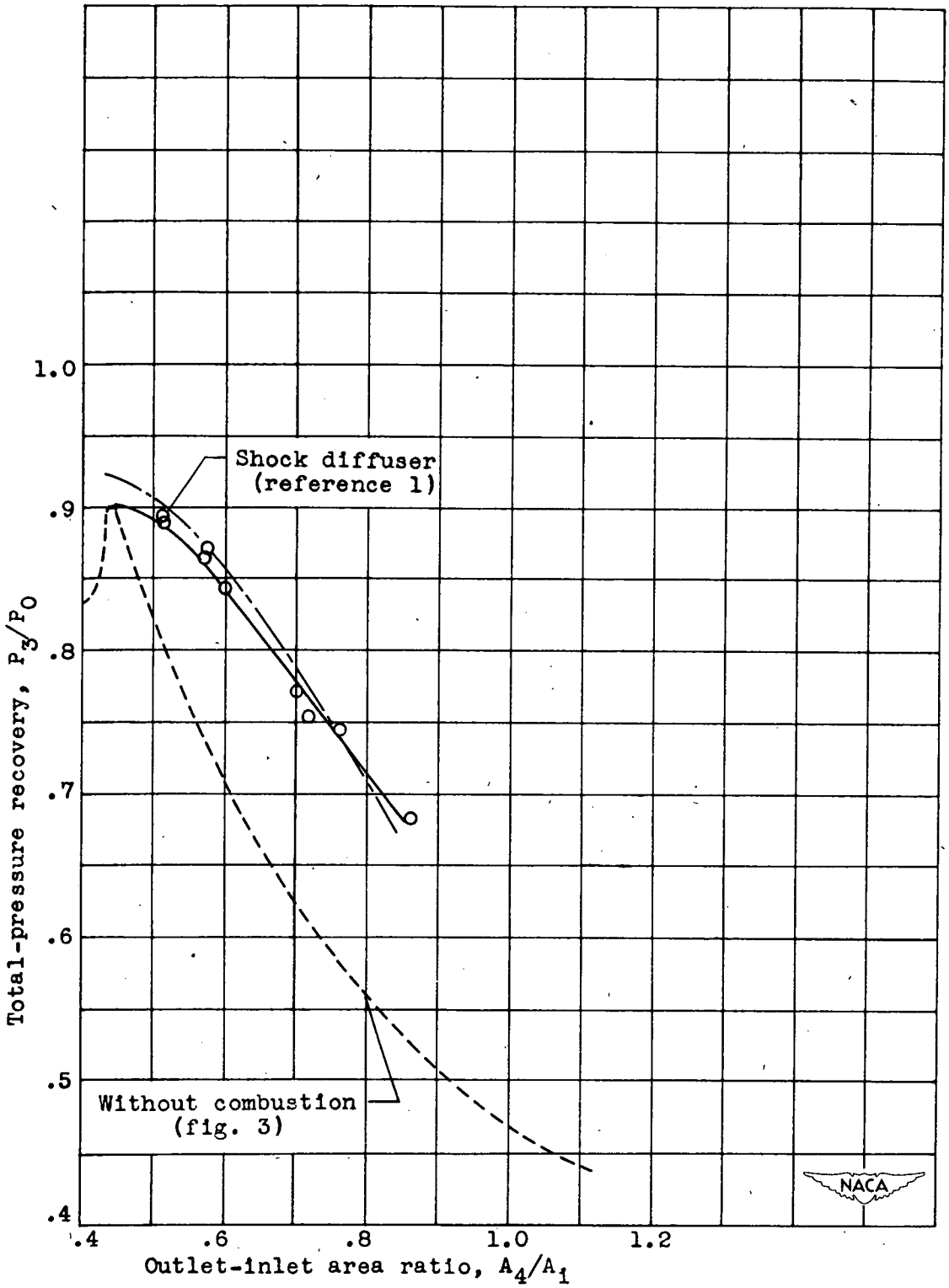

Figure 6. - Variation of peak total-pressure recovery with outlet-inlet-area ratio.

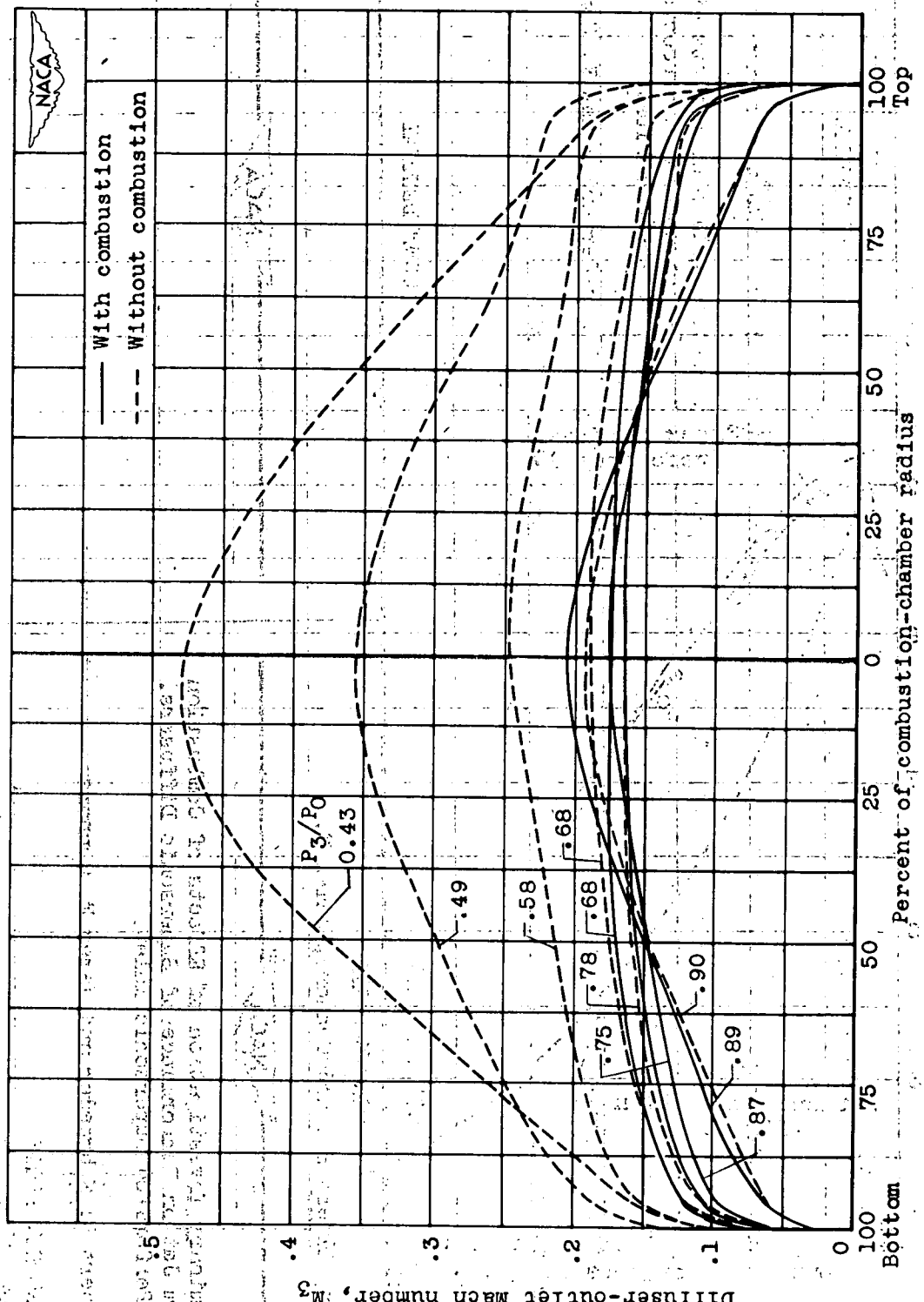

Figure 7. - Variation of diffuser-outlet Mach number with and without combustion for several values of total-pressure recovery P_3/P_0.