NACA TM L53I21a

NACA

RESEARCH MEMORANDUM

INVESTIGATIONS TOWARD SIMPLIFICATION OF MISSILE CONTROL SYSTEMS

By Howard J. Curfman, Jr., H. Kurt Strass,
and Harold L. Crane

Langley Aeronautical Laboratory
Langley Field, Va.

NATIONAL ADVISORY COMMITTEE
FOR AERONAUTICS

WASHINGTON

November 12, 1953
Declassified February 8, 1960

NATIONAL ADVISORY COMMITTEE FOR AERONAUTICS

RESEARCH MEMORANDUM

INVESTIGATIONS TOWARD SIMPLIFICATION OF MISSILE CONTROL SYSTEMS

By Howard J. Curfman, Jr., H. Kurt Strass, and Harold L. Crane

INTRODUCTION

Simplicity in control-system design is a desire shared by all. The motivation behind this desire is the somewhat elusive factor known as reliability. It is readily recognized, therefore, that the simplification of the control system should lead to improved reliability without sacrificing system performance in the ultimate accomplishment of the desired task.

In general, the approaches to the problem of simplification of control systems must be by new ideas and unique applications or by reevaluations and modifications to current or past ideas. The Sidewinder missile developed by the Naval Ordnance Test Station (ref. 1) and the idea presented in reference 2 are two examples of a basic simplification in missile control systems.

While most of the remarks and ideas presented in this paper seem more readily applicable to missile systems, it is evident that these points or some of their corollaries have direct application to airplane control systems. It is the purpose of this paper to present three ideas that have been investigated. These data will not represent complete systems but rather will represent features and principles that should lead to simplification of control systems.

AUTOROTATING-VANE SPOILER

The first part of this paper deals with an autorotating-vane spoiler. The proposed control method using the autorotating spoiler is the "bang-bang," or flicker, or plus-minus type of control; that is, the spoiler is so arranged as to give either an up or down lift increment at all times. Figure 1 shows a typical installation of an auto-

rotating spoiler. From the cutaway view, it is noted that the spoiler consists of two vanes pivoted on a common shaft which passes through the wing. The vanes are oriented at right angles to each other, as shown; hence, each quarter rotation of the spoiler assembly would cause the vanes to alternately act as spoilers on the top and bottom of the wing. The shape of the spoiler is such as to make the assembly autorotate. Thus, the power that actuates the control is aerodynamic.

To allow control operation to be as desired, an escapement mechanism is used to limit the assembly to intervals of one-quarter revolution. Hence, it is necessary for the intelligence device of the control system to "decide" when the escapement should be released; however, no great amount of power is required to actuate the escapement mechanism. For example, a small solenoid might suffice. Thus, no servomotor is required, and such an arrangement is readily adapted to a thin wing. Such a system might find use with short-range bombs where the simple, flicker control is sufficient and where the additional drag may not be too critical. Since the spoiler effectiveness can be estimated, for example, by the methods suggested in reference 3, the first consideration is concerned with how well this spoiler assembly will operate.

Details of the design of the autorotating spoiler tested are shown in figure 2. Only one vane is shown. The inertia given is that of the entire assembly. The design of the vanes is important since the configuration must autorotate.

The results of tests run in a blowdown jet at the Pilotless Aircraft Research Station at Wallops Island, Va. are presented in figure 3 in a plot of the operation time of the autorotating spoiler as a function of sea-level Mach number. This operation time was measured as the time from release of the escapement until 90° of rotation was obtained. This lag time is important since it directly affects the hunting oscillation of the bang-bang system. The control response time averaged about 0.01 second throughout the Mach number range. The aerodynamic lag involved was at most 5 percent of the lag shown. The spoiler response is essentially independent of wing size; therefore, the response was made nondimensional by giving the time required to operate in spoiler lengths. This plot is shown at the bottom of the figure, where the response varied from 40 spoiler lengths at $M = 0.5$ to 85 lengths at $M = 1.6$. As noted, these results were the same for angles of attack of 0° and 7°. Within reasonable limits, increasing spoiler height does not increase the operation time, provided the thickness is unchanged. Increasing spoiler length increases the time to operate in proportion to the square root of the length, also with thickness unchanged. In addition to the blowdown-jet tests, the assembly has also been tested on the transonic bump of the Langley high-speed 7- by 10-foot tunnel and was found to autorotate satisfactorily throughout the transonic region.

Flight-test results of a rocket-powered model equipped with the autorotating-vane spoiler are presented in figure 4. These tests showed that the spoiler arrangement having slightly less area than 2 percent of the exposed wing area gave the rolling effectiveness desired in the supersonic region. The use of several small spoilers is, of course, a logical extension of this idea if a greater effectiveness is desired, and the results presented in reference 3 can be used to obtain the effectiveness at angles of attack greater than those small values encountered in these tests. Approximately the same drag should be experienced as that attained with a flicker system using conventional flaps.

BELLOWS FLAP

Another scheme that has been investigated is a bellows-actuated flap. This scheme, of course, is not a new idea, having been considered both in this country and abroad in the past. The current study was begun as a reevaluation of this idea with particular emphasis on relieving some space requirements in missiles for control-system power supplies and actuators. Higher speeds have introduced increased dynamic pressures which, of course, offer promise to such a system. Thin surfaces, too, have led to difficult problems concerning torque rods and actuating methods for control surfaces.

A schematic arrangement of the bellows-operated flap is shown in figure 5. It consists of an airtight, flexible chamber installed beneath a split flap and vented through a controlling valve to impact or base pressure. The design of the valves would precisely control the flap deflections. Although the sketch shown has the split flap in a particular chordwise position, the principle allows a very compact arrangement and split flaps at the trailing edge are equally feasible. The bellows-flap arrangement is one which literally supports the control against hinge moments, rather than twisting the control surface.

Results of a free-flight test of a rocket-powered model equipped with the bellows flap are shown in figure 6. The split flap was on the top surface of one semispan wing only and was located as shown. This flap was operated as rapidly as possible within the limitations of the existing air intake and distribution system. This operation was essentially in a square-wave manner. The wing section at the flap midspan was 3.7 percent thick, and the bellows was of the simplest design. The maximum control deflection is shown by the solid curve, and the dashed curve shows the rolling effectiveness of the split-flap aileron. The other curve shows that the split-flap effectiveness is essentially the same as that of a conventional trailing-edge aileron of the same chord and spanwise location. Improved bellows design will permit a large increase in maximum flap deflection.

The operation time in seconds required for the flap to move to full deflection is shown as the solid line in the lower part of this figure. The time of operation varied from 0.035 second at $M = 0.7$ to 0.02 second at $M = 1.9$. In nondimensional terms (the dashed curve), the time required for flap operation varied from 280 flap chords traveled at $M = 0.7$ to 400 flap chords at $M = 1.9$. It should be pointed out that the rate of flap deflection could be varied considerably by changing the capacity of the air-distribution system in relation to the bellows volume.

Such a system need not operate as a flicker or bang-bang system as described. Proportional operation of the flap has been obtained by proper valve design. One factor involved, of course, in such an arrangement is the effect of the valve size on the air flow. Also, since the pressure tending to close the flap is usually much less than that for opening it (the base pressure being smaller in magnitude than the impact pressure), the flap will always be somewhat slower in closing, although the design of the system can remove almost completely this feature.

FREE CONTROLS

Another approach toward simplification of control systems would be to improve the aerodynamic response characteristics of the airplane or missile and hence obviate the need for some automatic control equipment. For example, if the original aircraft had better damping characteristics, some automatic control devices might be eliminated, or at least made less complex. It is well known that the floating characteristics of free controls can alter the damping of an aircraft over a wide range. The principle of using free controls to improve the response of aircraft is, of course, not new. The works of Greenberg and Sternfield (refs. 4 and 5) and others offer a sound foundation. It appears, however, that a reevaluation and investigation of this principle, particularly with regard to missiles, would be fruitful. The remainder of this paper will present illustrations of this approach and its effectiveness.

To illustrate this approach, consider as an example the problem of lateral damping of some current airplanes. It is known that if the rudder is freed during a lateral oscillation, the effects of control-surface floating characteristics and friction in the control system have led to snaking or very lightly damped oscillations, that is, oscillations that were reinforced by aerodynamic moments induced by the floating control. The first question that naturally arises is what are the control-surface characteristics required to improve the damping. A conventional stability-boundary plot, a typical one of which is shown in figure 7, can answer this question. This plot is for the lateral case of an airplane at $M = 0.7$ and an altitude of 10,000 feet and is in terms of the rudder hinge-moment derivative C_{h_δ} and the rudder floating tendency C_{h_ψ}.

A positive C_{h_ψ} is for a rudder that floats against the wind, the negative value for a rudder that floats with the wind. The floating tendency is the action that causes control motion, and it is the response of the control surface, as manifested by C_{h_δ}, $C_{h_{\dot{\delta}}}$, inertia, and such factors, that phases the resultant moments so that the aircraft motion is affected. In addition to the usual oscillatory and divergence boundaries are shown lines of constant time to damp to half amplitude. For example, if the time for the airplane to damp to half amplitude $T_{1/2}$ is 2.8 seconds, the line so labeled defines the region that will improve this damping. If twice the damping is required, the line labeled $T_{1/2} = 1.4$ seconds defines this region.

Flight tests were made of an airplane having lightly damped lateral oscillations as shown at the top of figure 8. In these flight results the pilot had disturbed the airplane and had released the rudder when zero time was plotted. The typical motion shown in the lower part of the figure is the result when the rudder characteristics have been modified. In this latter case the aircraft had an auxiliary viscous damper on the rudder, a feature that alone did not offer sufficient improvement to response of the original configuration.

A summary of results of several flights at Mach numbers up to 0.7 at altitudes of 10,000 and 30,000 feet is shown in figure 9. On this conventional plot of $T_{1/2}$ against period, where the hatching represents the unsatisfactory side of the boundary, the circles represent rudder-fixed oscillations, the squares the original rudder free, and the diamonds the modified rudder free. The improvements are such as to make the airplane meet the period-damping specifications at 10,000 feet and to be nearly satisfactory at 30,000 feet.

The use of free controls to augment the longitudinal damping of missiles has been studied for a canard-missile configuration that has been used by the NACA in automatic-control studies. A typical plot of the longitudinal stability boundaries of a missile at supersonic speeds is shown in figure 10. For the condition where the free controls are forward of the center of gravity, the oscillatory and divergence boundaries are reversed; that is, a control that floats against the wind leads to a divergence. The reference line of constant $T_{1/2} = 0.194$ second shown is representative of the missile damping with controls fixed. Thus, to improve on this damping, the region shown represents the values of C_{h_α} and C_{h_δ} that must be used.

Figure 11 shows the effects of these free-floating canard controls on the damping of the missile. The configuration is shown in outline form and has 60° delta wings and canard controls. The dashed curve shows the

angle-of-attack response of the missile with controls fixed, while the solid line shows the response with free-floating canard controls. Since the frequency of the oscillations is only slightly changed, the action of the free surfaces has been almost exclusively to give damping. In this case the aircraft damping has been changed from about 10 percent to nearly 50 percent of the critical damping. For comparison, the long-short dashed curve is the result of flight tests of this same missile equipped with a rate-gyro servo arrangement for improving the damping (ref. 6). The solid curve in the figure is a calculated result, while the other curves were obtained from flight data. A recent flight test of a different canard configuration investigating this principle showed essentially the same results. These data were not available for presentation here.

It is emphasized that a separate control for damping is not a necessity, since by effective design the same surfaces can be used for damping as well as for control.

SUMMARY

In summary, three ideas have been discussed that could lead to simplification of control systems. These systems have included the autorotating spoiler and a bellows-flap arrangement, which have been discussed as bang-bang or flicker systems, although control-valve design would allow proportional operation of the bellows flap. The use of free controls has also been discussed with regard to improving airplane lateral oscillations as well as the longitudinal damping of a canard missile configuration.

Langley Aeronautical Laboratory,
National Advisory Committee for Aeronautics,
Langley Field, Va., September 1, 1953.

REFERENCES

1. Blaise, Robert A.: Report of Flight Tests of Sidewinder Missiles EX-1-2 - Serial No. 1 and Serial No. 2. Test Rep. 30-142, NOTS No. 610, U. S. Naval Ord. Test Station (Inyokern, Calif.), Jan. 20, 1953.

2. Gardiner, Robert A.: A Combined Aerodynamic and Guidance Approach for a Simple Homing System. NACA RM L53I10a, 1953.

3. Lowry, John G.: Data on Spoiler-Type Ailerons. NACA RM L53I24a, 1953.

4. Greenberg, Harry, and Sternfield, Leonard: A Theoretical Investigation of the Lateral Oscillations of an Airplane With Free Rudder With Special Reference to the Effect of Friction. NACA Rep. 762, 1943. (Supersedes NACA ARR, Mar. 1943.)

5. Greenberg, Harry, and Sternfield, Leonard: A Theoretical Investigation of Longitudinal Stability of Airplanes With Free Controls Including Effect of Friction in Control System. NACA Rep. 791, 1944. (Supersedes NACA ARR 4B01.)

6. Moul, Martin T.: Flight Investigation of a Supersonic Canard Missile Equipped With an Auxiliary Damping-In-Pitch Control System. NACA RM L52K14b, 1953.

TYPICAL AUTOROTATING-VANE-SPOILER INSTALLATION

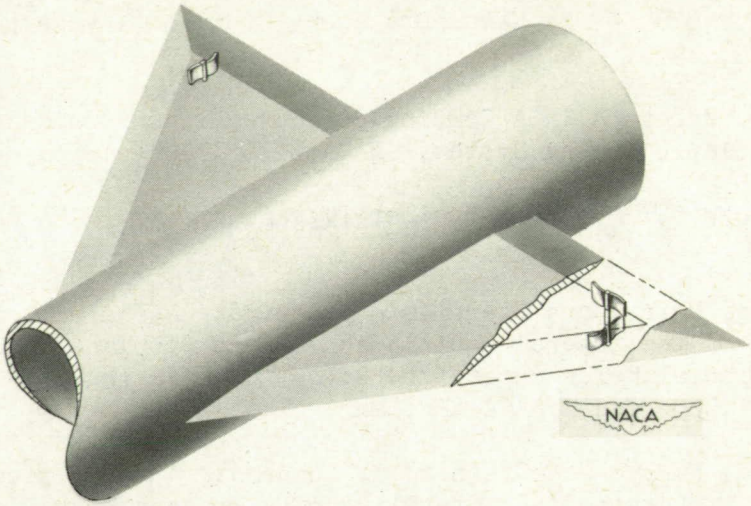

Figure 1

DETAILS OF AUTOROTATING-VANE SPOILER

l = 2 IN.; I = 8.125 x 10^{-6} SLUG-FT^2

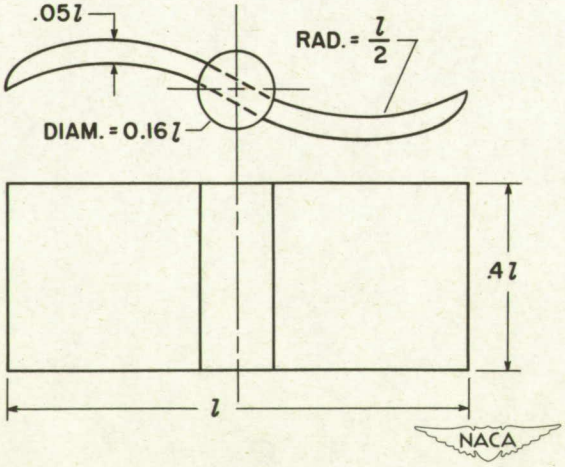

Figure 2

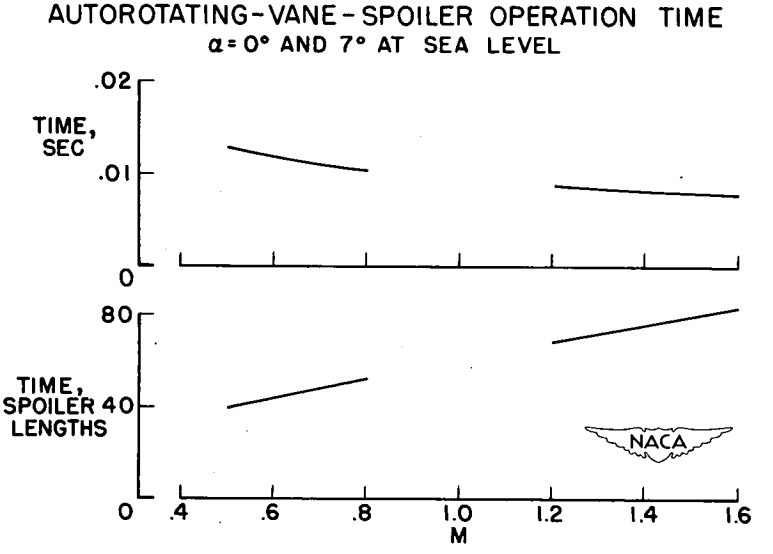

Figure 3

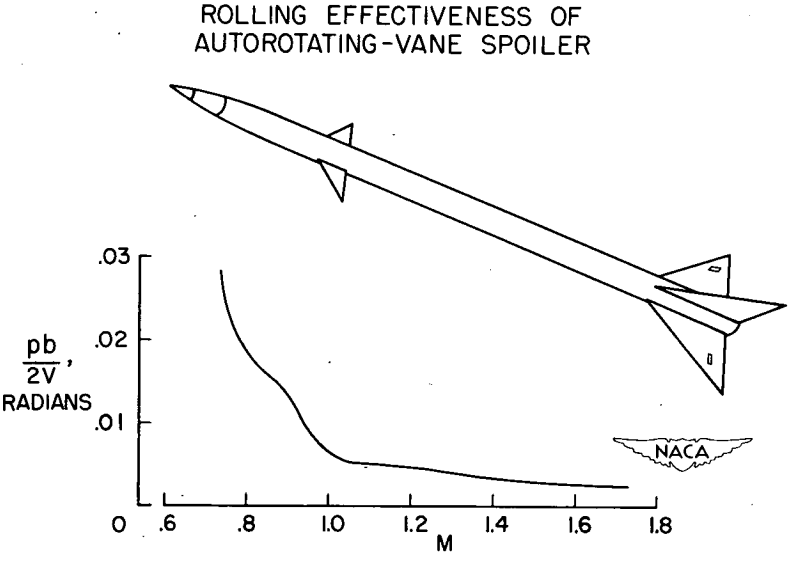

Figure 4

SCHEMATIC OF BELLOWS FLAP

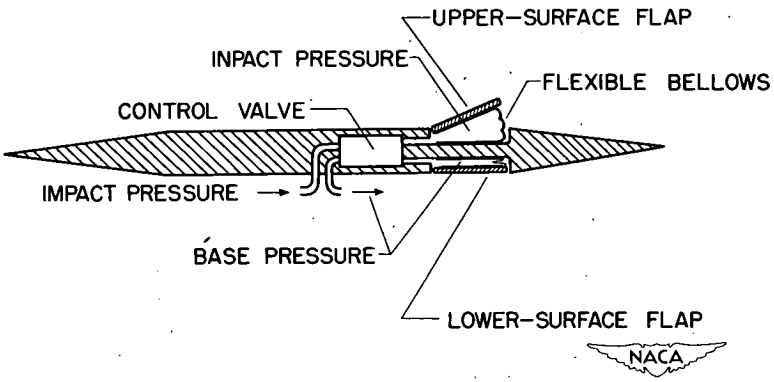

Figure 5

FLIGHT RESULTS OF BELLOWS FLAP

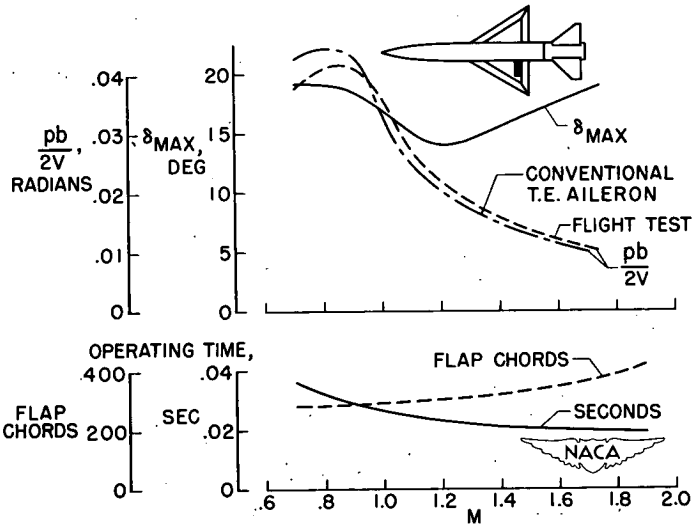

Figure 6

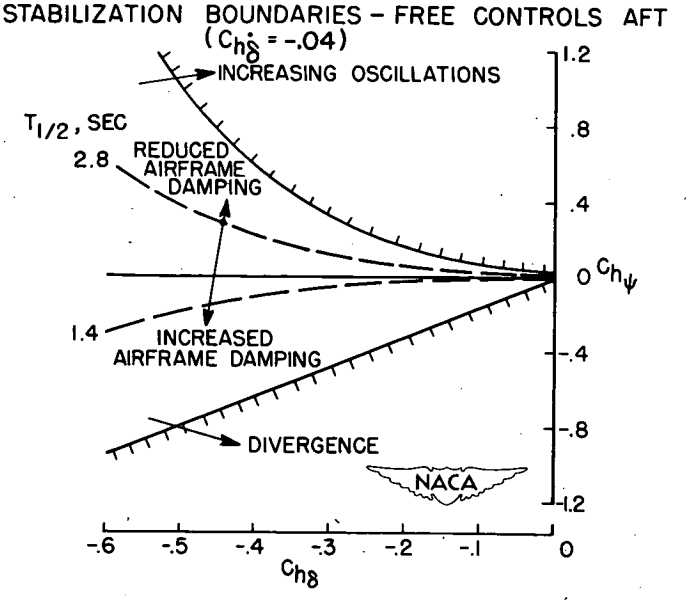

Figure 7

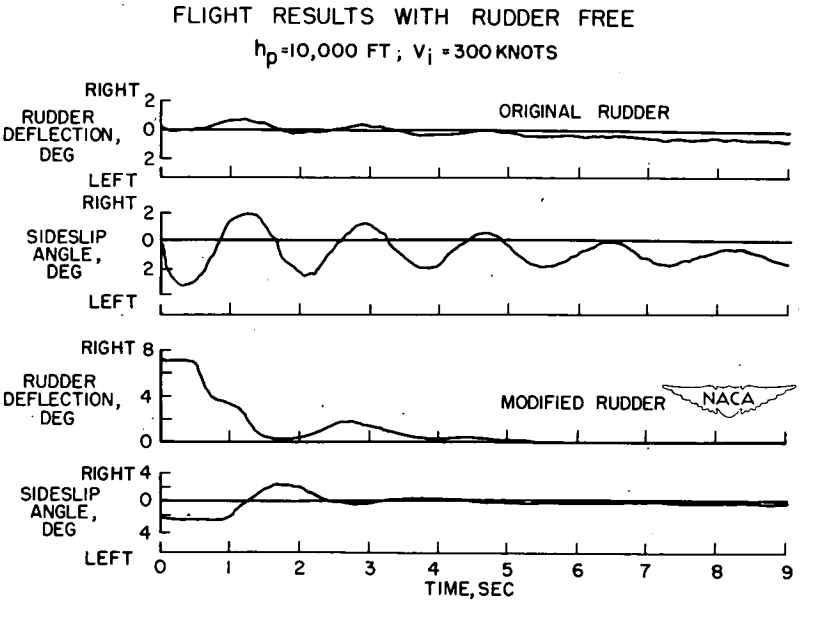

Figure 8

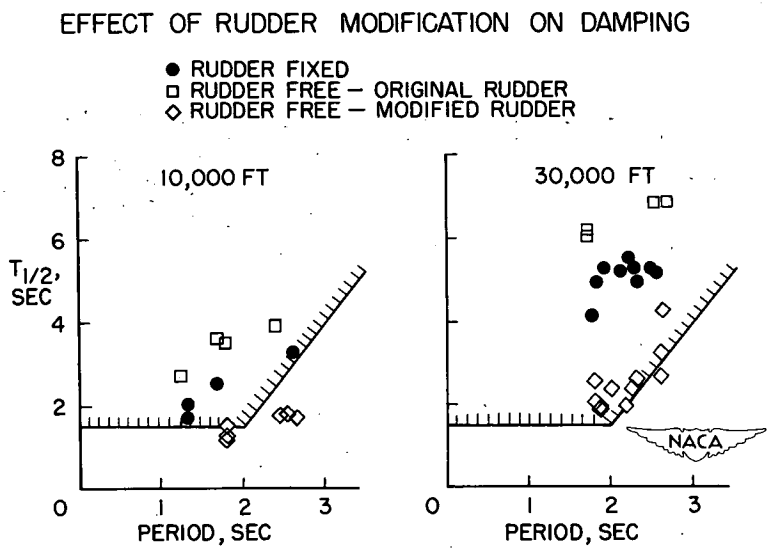

Figure 9

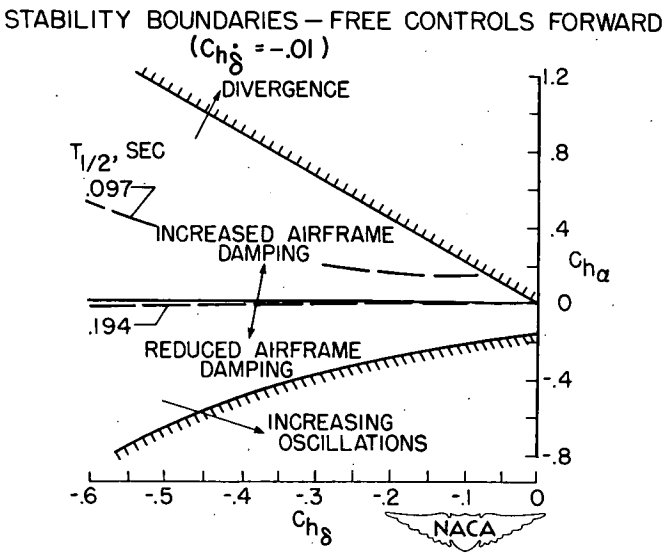

Figure 10

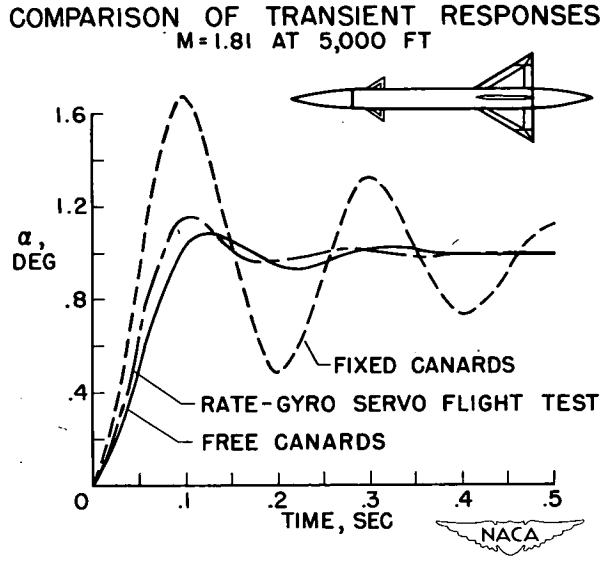
COMPARISON OF TRANSIENT RESPONSES
M = 1.81 AT 5,000 FT
1.6
1.2
α, DEG
.8
.4
0
.1
.2
.3
.4
.5
TIME, SEC
FIXED CANARDS
RATE-GYRO SERVO FLIGHT TEST
FREE CANARDS
NACA

Figure 11