CASE FILE
COPY

TECHNICAL MEMORANDUMS

NATIONAL ADVISORY COMMITTEE FOR AERONAUTICS

NACA-TM-471

No. 471

TECHNICAL PROGRESS SHOWN IN THE 1927 RHÖN SOARING-FLIGHT CONTEST

By W. Hübner

From Zeitschrift des Vereines Deutscher Ingenieure
December 3, 1927

REPRODUCED BY
NATIONAL TECHNICAL
INFORMATION SERVICE
U.S. DEPARTMENT OF COMMERCE
SPRINGFIELD, VA 22161

Washington
July, 1928

18

NOTICE

THIS DOCUMENT HAS BEEN REPRODUCED FROM THE BEST COPY FURNISHED US BY THE SPONSORING AGENCY. ALTHOUGH IT IS RECOGNIZED THAT CERTAIN PORTIONS ARE ILLEGIBLE, IT IS BEING RELEASED IN THE INTEREST OF MAKING AVAILABLE AS MUCH INFORMATION AS POSSIBLE.

NATIONAL ADVISORY COMMITTEE FOR AERONAUTICS.

TECHNICAL MEMORANDUM NO. 471.

TECHNICAL PROGRESS SHOWN IN THE 1927 RHÖN SOARING-FLIGHT CONTEST.*

By W. Hübner.

Status of Glider Construction

Interest in soaring flight has diminished greatly since the first surprising endurance flights in 1922. The general public is impressed only by the sensational development and not by the long study of details which must then follow, if a technical task is to be brought to some degree of completion.

The development of the glider was fairly complete, even in 1922, as regards its general structure and outward form. Most of the more recent gliders essentially resemble the successful ones of that year.

Since that time the further development of the glider has consisted in a very gradual and arduous improvement as regards air resistance, weight, strength and maneuverability. The recent types, built for maximum performance, differ but little externally from their predecessors. Closer inspection, however, reveals the results of much laboriously won experience and knowledge.

*Technische Fortschritte beim Rhön-Segelflugwettbewerb 1927," Zeitschrift des Vereines Deutscher Ingenieure, December 3, 1927, pp. 1717-1721.

In addition to these maximum performance gliders, training types for aviation pupils have been built for several years. While the pilots were formerly war aviators and hence experienced pilots of engine-driven airplanes, soaring-flight sport must now train pilots to take their places. It has been demonstrated, moreover, that soaring flight furnishes a suitable and very cheap kindergarten for the education of future airplane pilots. The qualifications of school and training gliders differ from those of performance gliders. This circumstance led to the development of two new glider types which acquired importance with the increasing spread of soaring-flight sport in Germany. In addition to the gradual development of the performance glider, there are two new types of gliders, one for beginners and one for airplane pilots.

General Survey of the 1927 Rhön Soaring-Flight Contest

Contests are comparable valuations of performances. In flight contests the performances depend on the quality of the aircraft and on the skill of the pilot. An inexperienced pilot can attain no first-class performances even on a high-class aircraft. Neither can a good pilot obtain more than mediocre results on an aircraft which is aerodynamically inferior. In contests between engine-driven airplanes the quality of the driving gear constitutes the third factor.

Since all pilots differ from one another in their ability,

the quality of an aircraft can never be directly determined from the results of a contest. It is possible, however, to compare the ability of pilots when they operate equivalent aircraft. A contest with perfectly equivalent aircraft affords the best solution from a simple sporting viewpoint. Of course, in engine-driven aircraft, the difference in the reliability of the engines may vitiate the results. With gliders, however, this difference is entirely eliminated, so that it is possible to make direct comparisons of the performances of the pilots.

Due to special circumstances, the majority of the school and training gliders participating in this year's contest (1927) were of the same or equivalent types. The Rhön-Rossitten Society, for example, had made available carefully worked-out designs of a successful type of a school and of a training glider, in order to prevent inexperienced contestants from making hopelessly inferior gliders. Many contestants followed these designs. The other school and training gliders, however, so closely resembled those of the Rhön-Rossitten Society, both in external appearance and in their performances, that they may be regarded as practically equivalent.

Combining these two types in a special school and training class enabled, for the first time in Germany, a purely sport contest with nearly equivalent aircraft. Maximum performances, which are important for research purposes, could not be expected of these gliders. For this purpose another contest was there-

fore arranged, which was designated as the "performance contest" and was participated in by high-class gliders.

The first contest, in which nearly equivalent gliders participated, was not expected to produce anything technically new. The second contest, in which the best gliders were pitted against one another, likewise showed no remarkable technical development. The researches of the last few years have resulted in such an aerodynamic and structural perfection of gliders that no great sudden improvement can be expected.

While retaining the usual outward appearance, which essentially resembles that of engine-driven airplanes, improvements are possible only through the increasing experience of the pilot and the continuation of flow research.

Fundamental changes in the form of the glider are conceivable. A third contest was for the purpose of producing new glider types. Results of technical value were to be expected more especially from this contest.

Gliders Participating in the School and Training Contest

The school glider, which begins the education of the prospective glider pilot must, in the first place, be inexpensive and easily repaired after being damaged in poor landings. Aerodynamical fineness is dispensed with in favor of these requirements. It is more a "glider" than a "soarer."

In the 1927 contest, all the school gliders were like or similar to the design by the Rhön-Rossitten Society. They were high-wing monoplanes with skeleton fuselages (Fig. 1). The pilot's seat, under the wing, was entirely unprotected and there were no obstructions in front of it. This type of construction lessens the liability of the pilot's being injured by splinters in the event of a break. Since the pupil had no visible reference line for the position of the glider with respect to the horizon, he was obliged, from the beginning, to learn to fly by feeling. Training on such an aircraft would be beneficial for all airplane pilots who, when deprived of their instruments, are unable to operate their airplanes.

The training glider (Figs. 2, 3 and 4) is designed to enable aviation pupils to make long soaring flights. It was given the form of a high-wing monoplane, in order to lessen the air resistance. The rectangular wing affords good stability and consequent safety even in stalled flight. It is aerodynamically better built than the school glider. In order to lessen the air resistance, the wings were braced by struts, instead of wires, and the open seat was replaced by a fuselage. Nevertheless, these gliders cannot be regarded as aerodynamically perfect because, for the sake of simplicity, they have a very short span of only about six times the chord.

Performances and Properties of School and Training Gliders

Despite their simple construction, the school and training gliders made very good flight records. Long soaring flights were made by the more skillful pilots with the school glider, even at wind velocities of less than 6 m (19.7 ft.) per second. Gliders of both classes showed a marked superiority as regards maneuverability, over many earlier performance gliders. This is all the more noteworthy, because satisfactory rudder effect has always been difficult to obtain at the low speeds attained by the lightly loaded gliders of this class.

In the stalled condition, which is so often involuntarily assumed by inexperienced pilots, especially in curving flight, these gliders exhibited excellent lateral stability. They showed no tendency to rotate about the longitudinal axis or to spin. This property, which greatly reduces the danger of training flights, is due to the rectangular shape of the wings. The tips of such wings have a smaller induced angle of attack than their middle portion ("Handbuch der Flugzeugkunde," Vol. II, Fuchs and Hopf, Berlin, 1922, p. 123). They accordingly damp rotations about the longitudinal axis, even when the maximum lift of the whole wing has been exceeded and the glider is visibly losing altitude. The pilot is thus enabled to recognize his error and to correct it before the critical condition is reached.

Gliders Participating in the Performance Contest

The Rhon-Rossitten Society published no designs for performance gliders. Hence there were various types, some of which had been more or less successful in previous contests. It is worthy of note that, aside from the old Darmstadt glider "Margarethe" which was unfortunately destroyed this year (1927), no two-seat glider appeared.

All the gliders, excepting one which could also be used as a biplane, were high-wing monoplanes with cantilever or braced wings according to their span. From the photographs and line drawings of the probably two aerodynamically best performance gliders, "Oberschlesien" (Figs. 5-8) and "Darmstadt" (Figs 9-11), it is seen that no changes have been made in the usual form of the last few years. The Oberschlesien (Figs. 5-8) has an aspect ratio of 20, which is probably about the maximum for satisfactory maneuverability. At any rate the Oberschlesien, under the guidance of a comparatively young pilot, brilliantly fulfilled all the hopes reposed in it. The performances of the Darmstadt under Nehring's skillful piloting were the climax of the contest. Despite its great empty weight of 150 kg (331 lb.) it was preeminently efficient in soaring. Structurally, the Darmstadt must be regarded as a model.

The only foreign glider, "Le Vautour" of Auger, fell far behind the German contestants. Its pronounced dihedral pro-

duced such great stability as to render the ailerons apparently of no effect.

The Technical Contest

This contest called forth much that was unfinished and much that was faulty. It was distinguished by two gliders, the "La Pruvo" of Kirchner (Figs 12-14) and the "Zaunkönig" of Nihm (Figs. 15-21). Kirchner had attempted to obtain maximum empty weight, and consequent minimum dimensions, by model workmanship. Although La Pruvo had some defects, especially as regards covering and capacity, due to lack of experience, it was nevertheless a brilliant example of a performance glider with an empty weight of only 35 kg (77 lb.).

Since the flying weight of La Pruvo was only about 100 kg (220 lb.), its dimensions were small. Small gliders are especially important, however, for soaring flight. In the atmosphere there are many vertical thermal currents of small extent. Of this nature, for example, are the vertical currents under cumulus clouds. An ascent under such a cloud with a glide to the next cloud (Fig. 22) may render long flights possible even far from any upward mountain wind. The most effective utilization of such narrow vertical-wind zones is probably possible only with small gliders like La Pruvo.

The details of La Pruvo show hardly anything new. The lateral control, by turning the wing tips about a horizontal axis

perpendicular to the direction of flight, was employed by Bleriot, though not so successfully as here. The only innovation is the system of runner springs, consisting of several pairs of steel-wire rings or hoops which are encased in a light streamlined housing. This device proved very satisfactory. Nevertheless, Kirchner's glider was nothing fundamentally new, for its essential characteristic, the light construction, is the aim of all airplane constructors.

Nihm with his "Zaunkönig" (Figs. 16-17) put really new ideas into practice. He was the first to use a symmetrical profile for the wings of a glider. Symmetrical wing profiles have the characteristic that the center of pressure of the air forces does not travel, as it does with cambered profiles, but is located at one-fourth the chord from the leading edge for all angles of attack used in normal flight. With the low position of the center of gravity, symmetrical wing profiles are therefore longitudinally stable, even without tail planes, and can be used on tailless gliders. Moreover, since the center of pressure does not travel, no torsional forces are produced in the wings, which can therefore be made correspondingly lighter. The disadvantage of the symmetrical profile is its small maximum lift, which is about 20% less than the lift of good cambered wing sections.

In order to avoid transition difficulties, Nihm built his glider with a short fuselage and an elevator. The wing is not

free from torsional forces, since the lateral control is still effected through ailerons. Nevertheless, the empty weight of the Zaunkönig was only 45 kg (99 lb.). This small weight can doubtless be considerably further reduced by taking full advantage of the symmetrical wing section. The idea of using symmetrical wing sections came from the Rhön - Rossitten Society, which had already made numerous successful experiments with models of such gliders. Nihm's glider was built in close cooperation with the R.-R. Society.

The directional control of the Zaunkönig is effected by means of a rudder over each wing tip, as shown in Figs. 18-21. If, for example, the left rudder is deflected (b), the glider turns to the left. If both rudders are deflected equally by an acute angle (c), the stability about the vertical axis is increased. If both rudders are deflected 90° (d), the air resistance is greatly increased and serves to shorten the landing run. The rudders are operated by pedals in the usual way. This method of steering was developed some time ago by the Rhön-Rossitten Society and gave good results on the "Ente."

Translation by Dwight M. Miner,
National Advisory Committee
for Aeronautics.

N.A.C.A.Tech.Memo.471, Figs.1,5,9,15.

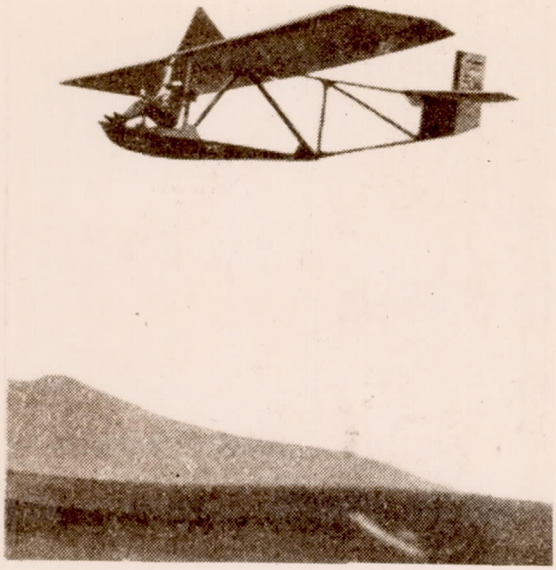

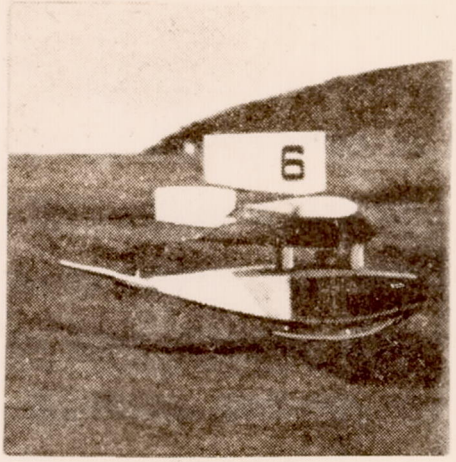

Fig. 15 The "Zaunkönig" glider

Fig. 1 A school glider *From V.D.I. Dec. 3, 27*

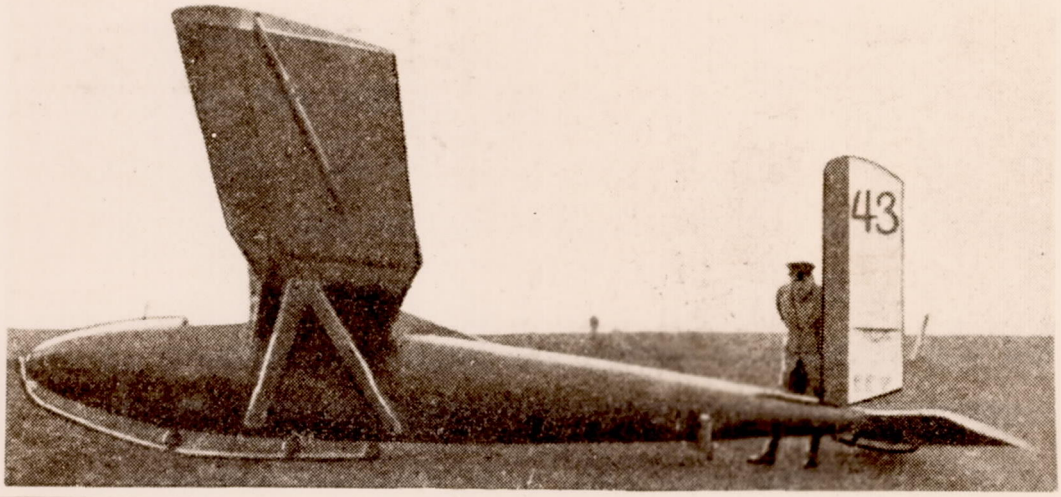

Fig. 5 The "Oberschlesien" glider

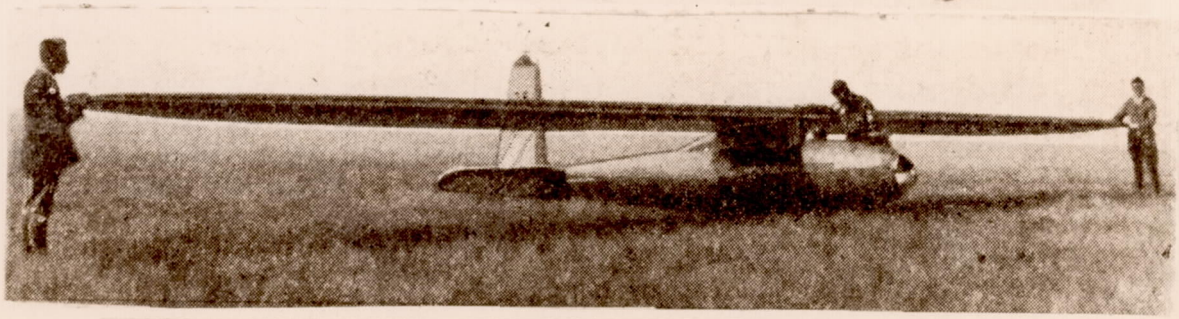

Fig. 9 The "Darmstadt" glider

1304 A.S.

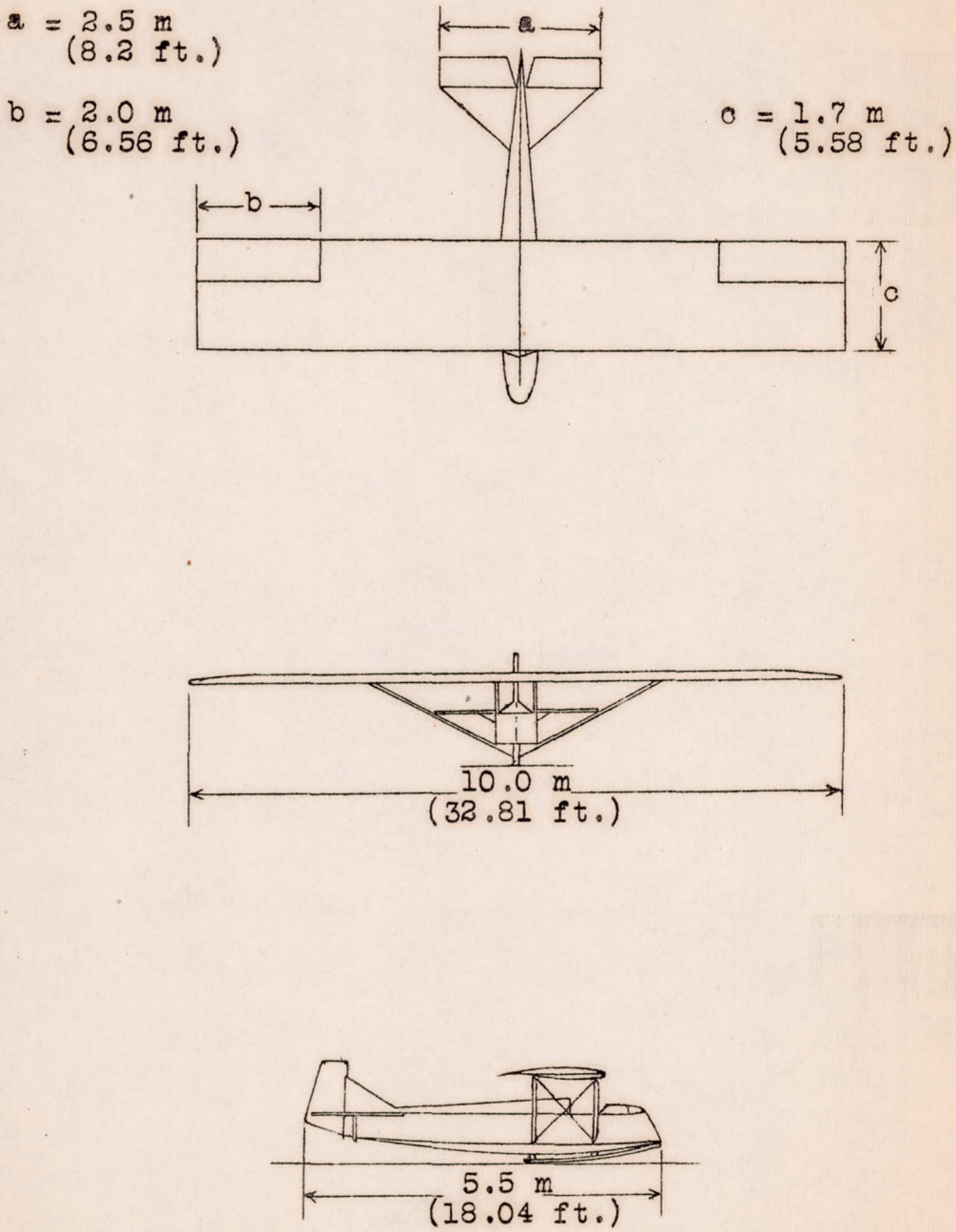

Figs.2,3,4. A training glider.

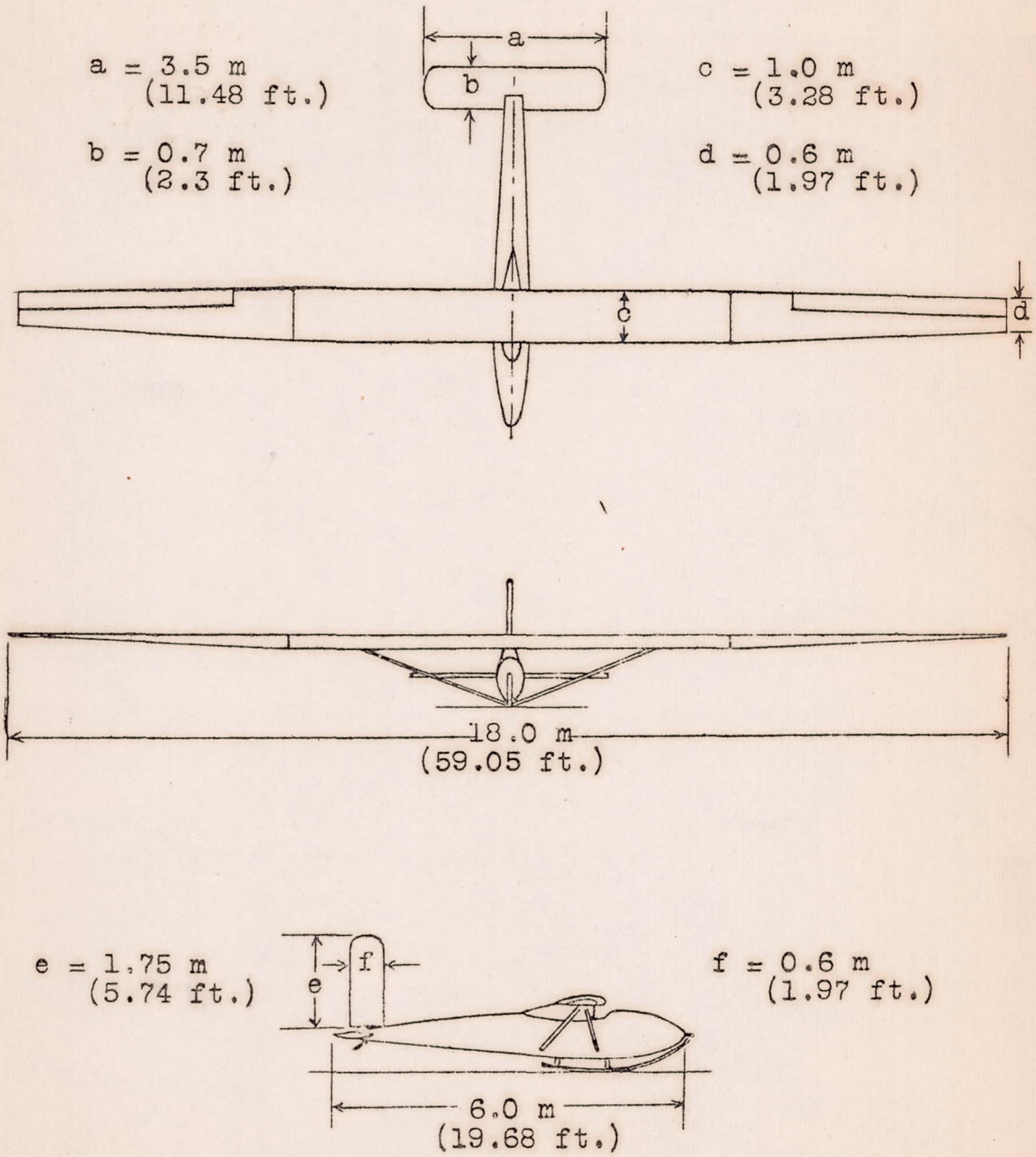

Figs.6,7,8. The "Oberschlesien" glider.

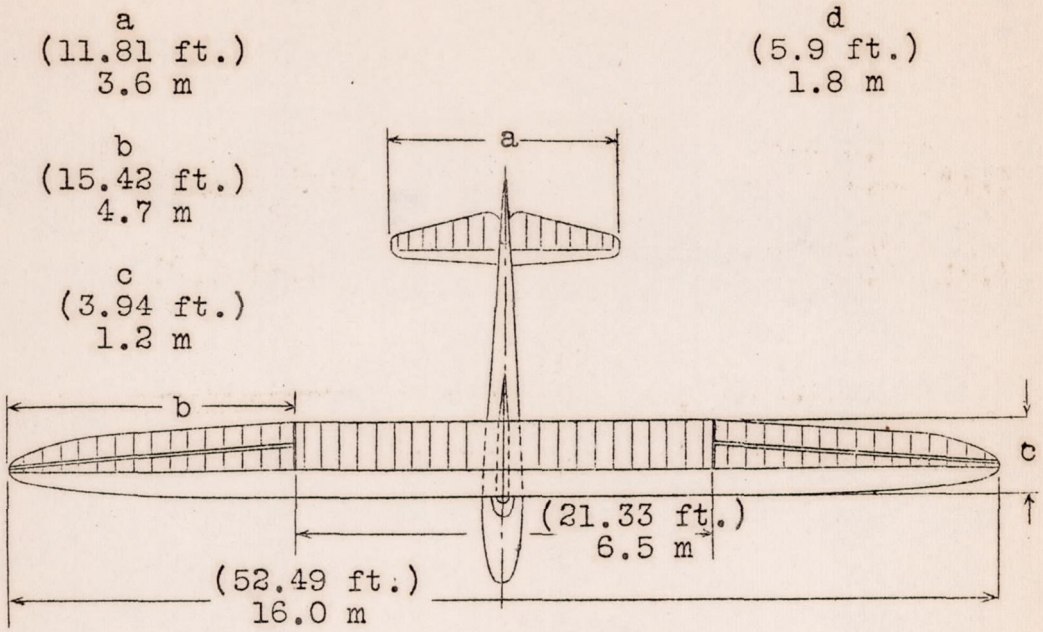

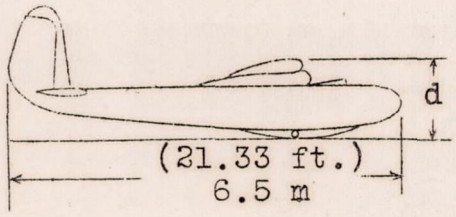

Fig.10 & 11 The "Darmstadt" glider.

a	b	c	d
(7.87 ft.)	(4.27 ft.)	(2.3 ft.)	(3.94 ft.)
2.4 m	1.3 m	0.7 m	1.2 m

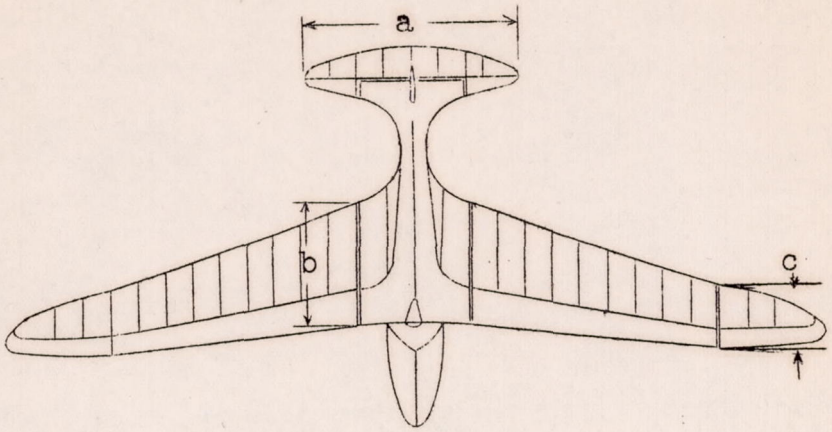

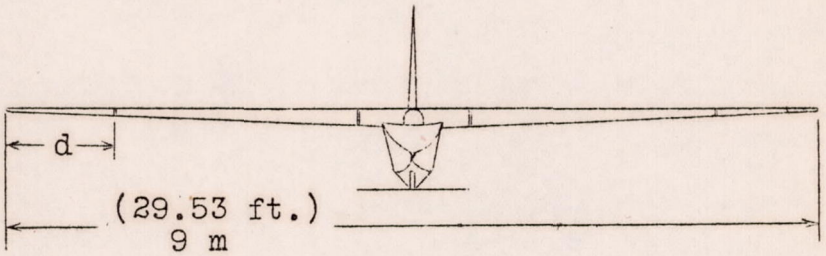

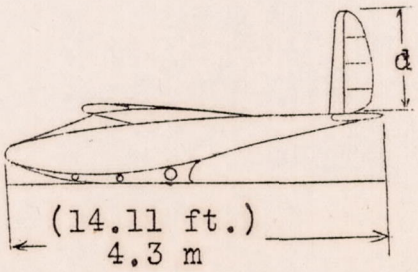

Figs.12,13 & 14 "La Pruvo" glider.

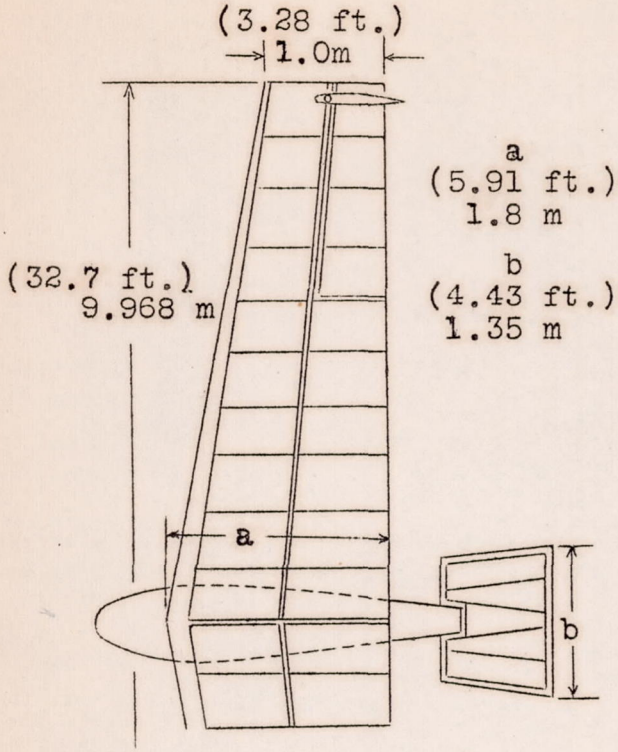

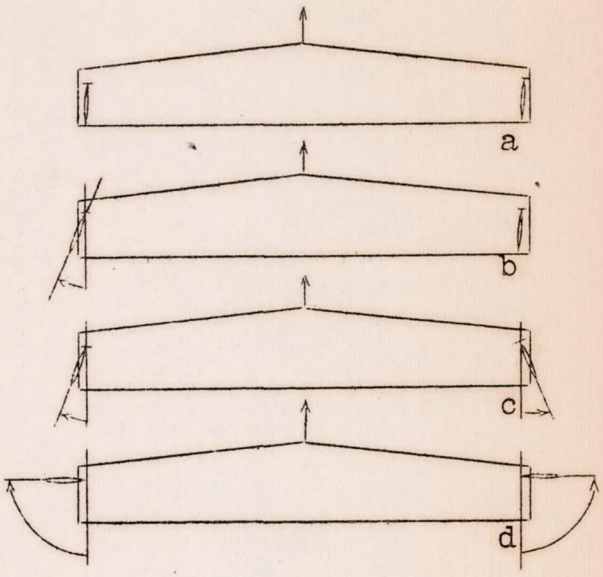

Figs.18,19,20 & 21 Showing operation of rudders,of the "Zaunkönig".

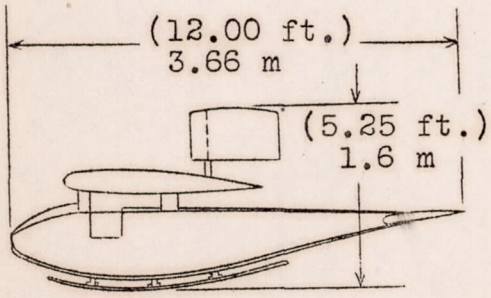

Figs.16 & 17 The "Zaunkönig" glider.

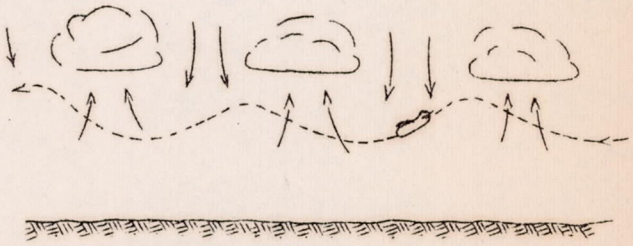

Fig.22 Soaring flight under cumulus clouds.