FILE COPY
NO. 1-W

CASE FILE
COPY

TECHNICAL MEMORANDUMS

NATIONAL ADVISORY COMMITTEE FOR AERONAUTICS

No. 498

FLUTTERING OF THE TAIL SURFACES OF AN AIRPLANE AND THE MEANS FOR ITS PREVENTION

By F. N. Scheubel

From Jahrbuch der Wissenschaftlichen Gesellschaft für Luftfahrt
December, 1926

FILE COPY
To be returned to
the files of the National
Advisory Committee
for Aeronautics
Washington, D. C.

Washington
January, 1929

NATIONAL ADVISORY COMMITTEE FOR AERONAUTICS.

TECHNICAL MEMORANDUM NO. 498.

FLUTTERING OF THE TAIL SURFACES OF AN AIRPLANE AND THE MEANS FOR ITS PREVENTION.*

By F. N. Scheubel.

In recent years very disagreeable oscillations have often developed on airplanes, which in many cases have resulted in breaks during flight and have been followed by disasters. On several airplanes, especially cantilever and partly cantilever monoplanes at high speeds, the wings began to oscillate, usually with a strong flapping by the ailerons. Other airplanes developed strong oscillations in the tail surfaces, sometimes at high speeds, as in diving, and sometimes at low speeds, when the airplane was nearly stalled.

The wing oscillations have been partially investigated by A. G. Von Baumhauer and Konig and partially by Birnbaum and by Blenk and Liebers. The present article, which constitutes a continuation of the work of Von Baumhauer and Konig, will therefore be restricted to the fluttering of the tail surfaces and especially to oscillations of the horizontal empennage. This will also illustrate the characteristics of all other phenomena of fluttering.

*"Ueber das Leitwerkflattern und die Mittel zu seiner Verhütung," from the W. G. L. Yearbook, December, 1926, pp. 103-107.

The horizontal empennage exhibits two essentially different kinds of oscillations (Fig. 1). One is a rapid up-and-down or flapping motion of both halves of the empennage and may be either symmetrical or not. The symmetrical case is connected with a bending of the fuselage and the damping surfaces, the unsymmetrical case with a twisting of the fuselage and a bending of the stabilizing surfaces. In either case there may be a twisting of the stabilizer about the axis of the spar. The motions are always dissipated so quickly that the reactions produced by them on the airplane may be disregarded. The term "fluttering" is applied to them alone.

The second kind of oscillation of the horizontal empennage (Fig. 2) is essentially different from the above. It has occurred on some airplanes in the vicinity of stalled flight and consists of an up-and-down oscillation of the elevator, combined with mostly considerably weaker torsional vibrations of the whole airplane about the spar axis. This kind of vibration constitutes no real fluttering of the empennage, but a phenomenon related to the "Rheinland oscillation" on which I delivered a lecture last year in Munich.

It is characteristic of all fluttering phenomena that the forces involved are of two distinct kinds. The individual structural elements of the airplane oppose to the changes in shape (the bendings and twistings) a resistance dependent only on these changes in shape and on the structural dimensions of

the airplane. The air forces, on the contrary, depend on the position in the air stream, partially determined by the changes in shape, of the parts on which the air forces act, and also on the dynamic pressure, i.e., on the square of the velocity. It thus happens that these air forces affect differently, according to the flight speed, the oscillations of the empennage which are independent of the speed, so that it is possible that there are certain speed ranges in which the air forces so affect the oscillations of the empennage that the whole system absorbs energy from the air flow and thus produces increasing "negatively damped" and therefore unstable oscillations. Through this reciprocal action between the forces of elasticity and those of the air, the problem acquires the conception of the critical speed, i.e., the speed at which the fluttering begins.

I will first show how this negative damping can be qualitatively explained. Figure 3 shows the nature of the damping air forces on a stabilizer with and without a movable part or elevator. On such a surface without a movable part, any rolling motion produces a supplementary speed of $w = r\omega$, which causes a change in the angle of attack with respect to the resulting motion and consequently an air force working against the motion. This oscillation therefore absorbs energy.

If, on the contrary, the airfoil has a flap which oscillates with the same frequency as the airfoil but with a shifting of phase with reference to it, the air force then varies according

to the angular phase. Thereby, in certain ranges of the angular phase, the air force may vanish or even acquire the contrary sign, so as to support and increase the oscillation. The mean value of the work done by the air force then becomes positive, and the system absorbs energy from the air flow. The maximum energy absorption then occurs at an angular phase of 90°. Furthermore, care must be exercised that the damping portion of the air force, which comes from the rolling oscillation of the stabilizer,

$$-\frac{\partial c_a}{\partial \alpha} r \omega \frac{\rho}{2} v F$$

shall increase in proportion to the speed, while the portion of the air force which strengthens the oscillations and which is produced by the oscillation of the flap,

$$\frac{\partial c_a}{\partial \beta} \beta \frac{\rho}{2} v^2 F,$$

is proportional to the dynamic pressure, i.e., to the square of the speed. The angular phase is determined on the one hand by the air forces acting on the flap and on the other hand by the effect of the rolling oscillation on the mass of the flap. The most important quantity here is the deviation moment (the mixed inertia moment) of the flap, since this determines the magnitude and rotational direction of the effect of the rolling oscillation of the stabilizer on the flap (Fig. 4).

The airplane constructor is interested in the location

and dependence of the critical speed. I will illustrate this problem by a numerical example. I will give only the results of the calculation, since the latter would be of little interest in itself and would lead too far. For the horizontal empennage represented by Figure 5, I have calculated the case of dissymmetric fluttering with torsion of the fuselage. The empennage has an area of 4 m^2 (43 sq.ft.), an aspect ratio of 4 and a weight of about 25 kg (55 lb.). The width of the elevator is 3/8 of the width of the whole empennage.

The quantities T_x, T_y, and D are respectively, the inertia moment of the whole empennage about the X-axis, the inertia moment of the elevator about its axis, and the deviation moment, the mixed inertia moment of the elevator about the X-axis and elevator axis. I have previously referred to the importance of the last-named quantity.

The dimensions were thus chosen, in order to enable me to utilize the results of the only recent empennage tests known to me, which were made in Göttingen at the request of the D.V.L. (Deutsche Versuchsanstalt für Luftfahrt). I wish here to express my gratitude to Professor Hoff for kindly giving me the results of the tests prior to their publication.

Figure 6 shows the test results, c_N being the coefficient of the normal force and c_R the coefficient of the elevator moment. The c_R curve is of interest. For small positive and negative angles of attack $\frac{\partial c_R}{\partial \alpha}$, the variation of c_R with the

angle of attack α, is very small, almost zero and practically independent of the angle of deflection β. On the contrary, $\frac{\partial c_R}{\partial \alpha}$ is very large in the region of the maximum lift of the empennage.

The air force coefficients for other empennage shapes, especially for empennages with balancing flaps on the elevator, are practically unknown. Nevertheless, English pressure-distribution measurements on balanced elevators indicate great irregularities.

The example can be calculated with the above-mentioned quantities. This is done, like all similar stability calculations, according to the method of small oscillations. By this method we obtain a series of stability conditions, of which the most essential ones in the present case are as follows.

The deviation moment, to the importance of which I have already called attention, must lie above a certain limit. Thereby the shifting of the center of gravity of the elevator in front of the axis of rotation and away from the fuselage increases the stability.

For the derivation of the air-force coefficients there are a few conditions which are fulfilled by a normal unbalanced elevator. These conditions may become critical in a balanced elevator. Since balanced elevators are seldom built, however, for the swift airplanes which are dangerous from the viewpoint of fluttering, even these conditions are nearly always fulfilled.

The only disagreeable condition is the last one, which follows from the Routh discriminant. It can be clothed in various forms according to the quantities whose effect on the stability are under consideration. From it we may first conclude that it is possible to obtain equilibrium by a sufficient forward shifting of the center of gravity of the elevator in front of the axis of rotation, provided the other conditions are fulfilled. It is another question as to how far this can be carried in a given case. In any event, recourse would be had to this last expedient only in an emergency.

The last stability condition for a given empennage with a given angle of attack can be represented by a diagram. Figure 7 shows, as abscissa, the "stiffness" of the fuselage and as ordinate, the square of the speed, up to a constant quantity which is, therefore, the dynamic pressure. By the term "stiffness" is meant the value of the torsional moment which rotates the fuselage by the angle 1 (57.3°). Figure 7 shows the stability limits, two straight lines, 1a and 1b, passing through the origin. The space included between these lines is the unstable region. The size of this field depends, when everything else remains equal, on the mass distribution of the elevator. When the deviation moment of the elevator is increased, i.e., when its center of gravity is moved forward, the stability limits approach each other (2a and 2b) and the unstable region diminishes until it vanishes altogether (line 3 in Figure 7). We

have then reached the above-mentioned mass distribution of the elevator, which is independent of the degree of the torsional stiffness. Figure 7 also shows the effect of changing the speed. If the attainment of stability by means of a very flexible fuselage (which in practice hardly enters into the problem) is disregarded, then any increase in the speed always means a lessening of the stability, as evidenced by the fact that the damping constant of the oscillation continually grows smaller, until it becomes zero on reaching the stability limit, the "critical speed" fixed at the beginning. On exceeding the critical speed, the damping constant passes to negative values (Fig. 8).

The phenomena thus far discussed are the so-called free or inherent oscillations of the system. It is known that everything capable of oscillating is made to do so by impulses or periodic forces. The amplitude of these oscillations depends partly on the magnitude and frequency of the disturbing force and partly on the frequency and damping of the oscillatory system. A detailed discussion of this subject would lead too far. I will therefore confine myself to showing you in a diagram (Fig. 9) how the oscillations, at a given speed, depend on the frequency of the disturbing force. The dashed line in Fig. 9 is the angular deflection of the empennage which would be produced by a static moment of unit magnitude. The heavy line represents the dynamic deflections as plotted against the disturbing frequency for a moment having the same amplitude. It is

apparent that the maximum deflection is about fifty times the static deflection. I will discuss these relations further in a future number of the Zeitschrift für Flugtechnik und Motorluftschiffahrt.

The source of the exciting forces is still to be determined. In the first place, periodic vortices released from the wings may constitute the disturbing force. Nothing is known regarding their frequency and magnitude. Experimentation is very desirable in this connection and also with reference to other problems. The main disturbing causes may be sought in the engine and propeller. Slight differences in piston masses may produce reaction moments of the frequency of the engine revolutions.

Irregular functioning of a cylinder may cause a lack of uniformity in the revolution speed and a consequent reaction moment of half the frequency of the engine revolutions. Poor functioning of the first cylinder is a chronic evil in many six-cylinder engines whose cylinders are poorly protected against the wind.

Quite large and very unpleasant periodic moments are generated by a two-bladed propeller in curving flight, these moments having twice the frequency of the engine revolutions. To this may be ascribed the strong fluttering observed from various sides, of a much flown German airplane in curvilinear flight. These mass effects can be avoided by using propellers with three or more blades.

There still remain the conclusions to be drawn for the constructor. It is of prime importance to make the fuselage as rigid as possible, as regards both torsion and bending. High, narrow, rectangular fuselages, which are liked for other reasons, are generally not very resistant to torsion, especially when built as slender as shown in Figure 10. This airplane also exhibited a strong fluttering of the horizontal empennage. A more compact, round fuselage, like that of the Curtiss racer, is best for swift airplanes. The elevator must not be mounted at the tip of the fuselage, but somewhat farther forward where the fuselage is thicker, as shown in the picture of the Curtiss 1922 racer and of the Short airplane (Figs. 11 and 12).

From the standpoint of the utilization of the material, a round fuselage is the best, since with the same quantity of material, it always has more torsional rigidity and adequate bending rigidity. Moreover, with a round fuselage, the covering can be much more securely applied for supporting, than with rectangular fuselages with flat sides. Round fuselages cost more, however.

Moreover, except when it is necessary to make the greatest possible reduction in the drag, it is advisable to support the stabilizer by a V strut or some similar device. This will give the stabilizer much greater rigidity, especially as regards torsion. The transmission of stresses to the fuselage is thus made simpler and surer.

In light cases, a continuous elevator axis militates against unsymmetrical fluttering, but this fails in heavy cases. Where either this device or a rigid coupling of the elevator halves can be installed without special difficulty, it is advisable to do so.

The elevator itself is better unbalanced, or with some balancing device not located in the same plane. In designing the elevator, it is important to make all parts remote from the axis of rotation and from the fuselage as light as possible. If this is done, it will hardly be necessary to use counterweights. If, however, after the trial flights, it is found necessary to resort to balancing flaps, they should be located as far as possible from the fuselage. It is then accomplished with smaller weights, since the effect is determined by the product of the distance from the rotational axis and the distance from the fuselage.

Only one recommendation can be made to the pilot. Cut off the gas and pull cautiously on the control stick. It would be a mistake to push the control stick, in order to descend faster. It is a matter of course that one will and must come down, but the safe way is to descend slowly.

C O M M E N T S

Mr. Hackmack.- "The phenomena of fluttering of the tail surfaces and oscillations of the wings have also occurred recently in other countries. The reason for this, in conjunction with the cantilever type of construction, seems to be especially the increase in the speed range, which has extended the field of oscillatory impulses. In yesterday's lecture, Mr. Rumpler mentioned a maximum speed of about 280 km (174 miles) per hour for a seaplane. Since, after the repeal of the treaty restrictions, we can now proceed with the development of racing airplanes, we everywhere encounter the problem of fluttering of the control surfaces. Theoretical researches and wind-tunnel experiments have shown a lack of agreement similar to that reported by Mr. Helmbold in connection with the experiments with floats in the Hamburg naval laboratory. Practical tests are therefore indispensable for the solution of the problem. The difficulties arising in this connection are: 1) The problem of safety; 2) The development of experimental methods.

"1) As regards the safety problem, this can be solved by beginning the experiments at a sufficient altitude and carrying a parachute which could be used after the failure of any individual parts of the airplane.

"2) The experimental methods comprise direct measurements with a vibration indicator and kinetographic measurements of

the oscillations in conjunction with time measurements. The investigation of the causes could be facilitated by rendering the air flow visible by means of smoke, etc., and by kinetographic photography of the same. The performance of such experiments appears to be of great importance for the further development of high-speed airplanes. It would be well for them to be executed at several places. Their cost would be small as compared with their importance for the development of aviation and for increasing its safety."

Von Dewitz, Director of the D.V.L.- "I would like to call attention to a case which might occur even when there is no pronounced fluttering. It has to do with the first Hansa-Brandenburg sea-monoplane, which was completed toward the end of 1917. During a steep spiral glide, violent vibrations suddenly developed in the control surfaces. The vibrations succeeded one another at intervals of one-half to one second. I had the impression that the vibrations would have become more frequent if the corresponding attitude of the airplane had been maintained longer. This was not feasible, however, in the interest of safety, so that after two or three vibrations the airplane had to be brought back to normal position. The vibrations were so violent as to give one the impression that some supporting part of the tail surfaces had given way. Simultaneously the steering wheel swung back and forth with such violence that

it was impossible to hold it. I produced the same conditions in another flight and had the control surfaces observed from the observer's seat. This observation showed that, when the altitude control was pulled in spiral gliding flight, the elevator bent strongly downward on both sides and then suddenly sprang back to its normal position. (The elevator had a steel-tube shaft.) Fig. 13 shows the shape of the horizontal empennage at that time. These phenomena failed to appear after the sides of the stabilizer had been cut away. Fig. 14 shows the final shape of the empennage.

"Since the disturbance was eliminated by this alteration, no further search was made for its causes. We assumed that the balancing flaps of the elevator dammed up the air which in turn caused the bending of the elevator. In this position the pressure was then suddenly released and the elevator sprang back into position (Fig. 15). I am unable to certify as to the correctness of this assumption."

Mr. Scheubel (Concluding word).- "In reply to the comments, I wish to make the following remarks.

"I can only agree with Mr. Hackmack. I also consider it very desirable for fluttering phenomena to be investigated on airplanes in flight. The whole calculation stands or falls with the correctness or incorrectness of the assumptions. The air forces on vibrating surfaces, however, are yet so little

known that we must content ourselves with assumptions which naturally may be wrong. Model experiments in the Aachen Aerodynamic Institute are being planned, but have not yet been begun. It would be very interesting if some particular case of fluttering could be investigated experimentally on an airplane in flight and simultaneously by calculation. Thus we would perhaps acquire a clearer insight into some of the still very obscure problems. Unfortunately such experiments cannot yet be undertaken in Aachen, due to lack of the necessary funds.

"The case of the Hansa-Brandenburg airplane, mentioned by Von Dewitz, is very interesting. I think the first empennage with the balancing flaps located in the air flow from the stabilizer was about the worst that could be made. The later form, with the balancing flaps extending beyond the stabilizer is decidedly better. In my opinion the latter form is the best method for balancing when the balancing flaps form an integral part of the elevator in the plane of the latter. I regard as still better, however, a special auxiliary surface, lying above or below the main horizontal empennage and operated in a suitable manner simultaneously with the elevator. Thus one can avoid the disturbances in the air flow on the balancing flaps, which disturbances are caused by the flow around the sides of the stabilizer and which are always possible with the other form. Care

must be taken, however, that the auxiliary surfaces, located above or below the empennage, can be more or less uncovered, according to their location, at large or small angles of attack."

Translation by Dwight M. Miner,
National Advisory Committee
for Aeronautics.

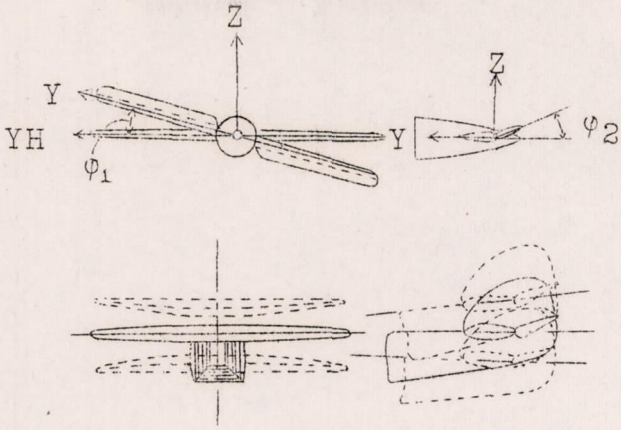

Fig.1

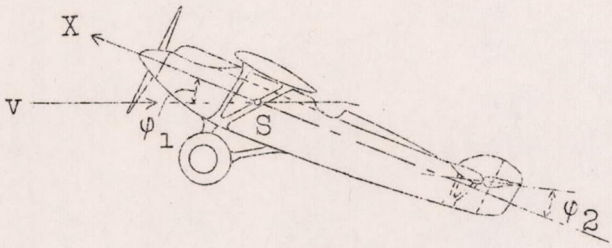

Fig.2

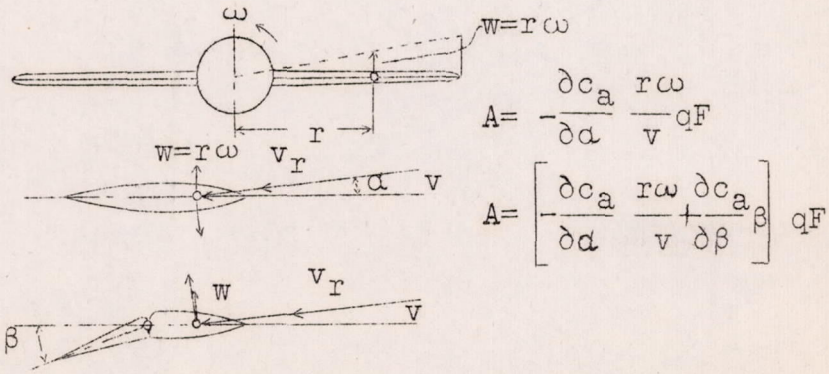

Fig.3

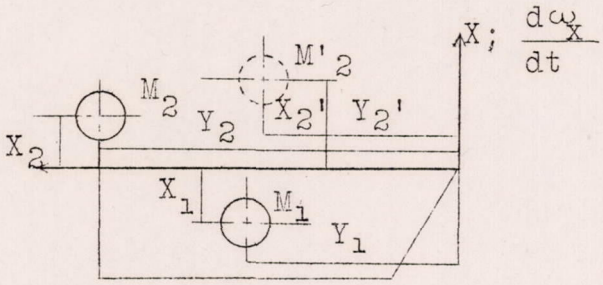

$$M_y = \left(-M_1 X_1 Y_1 + M_2 X Y_2\right)\frac{d\omega_x}{dt}$$

Fig.4

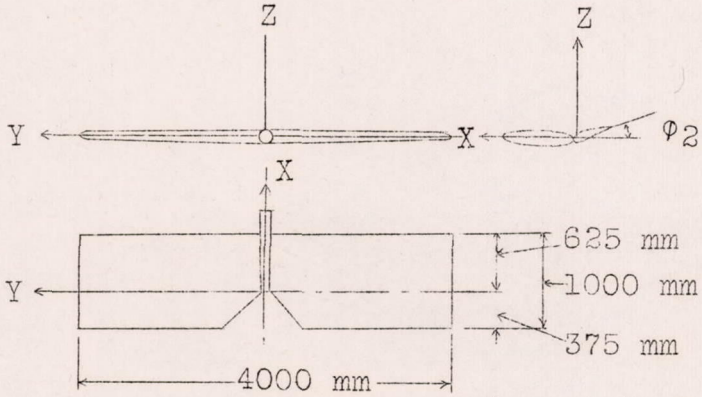

T_x = 1.6m kg.sec^2

T_y = 0.018 "

D_{xy} = 0.07 "

Fig.5

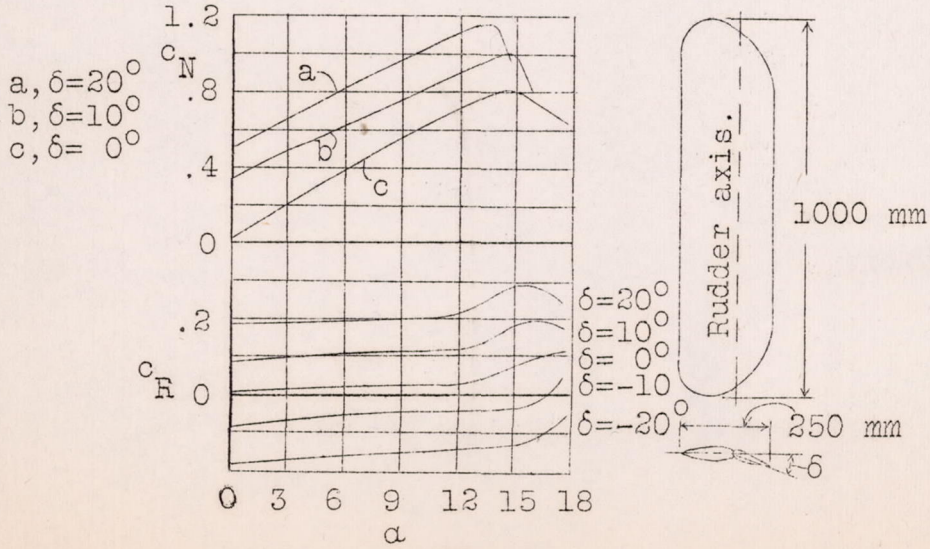

Fig.6

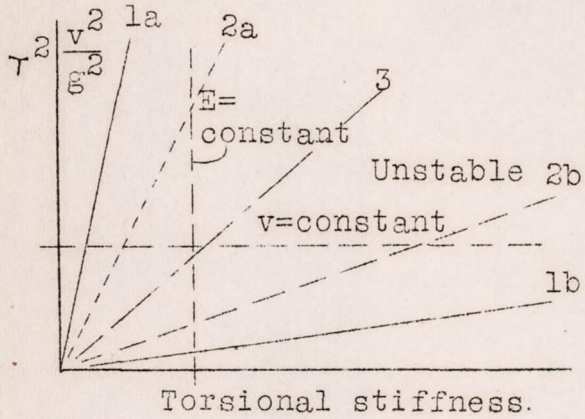

Fig.7

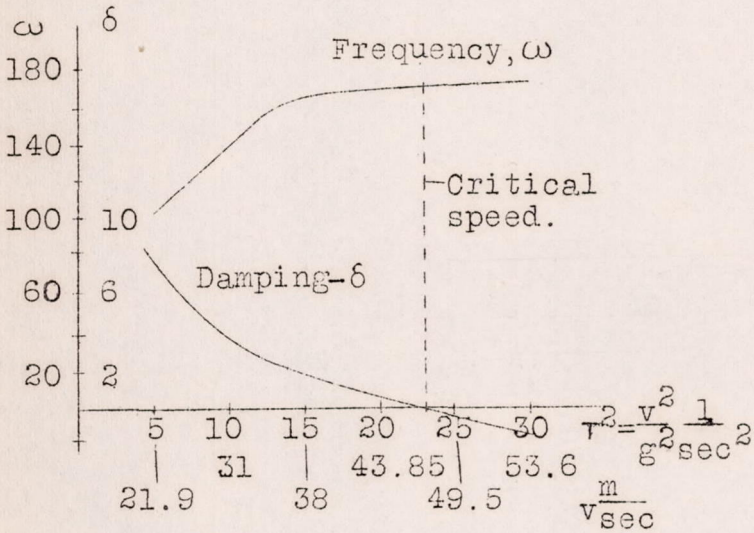

Fig.8

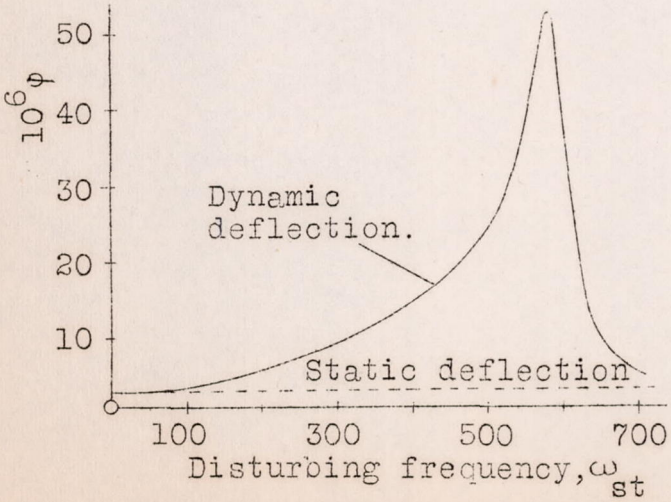

Fig.9

Fig.13

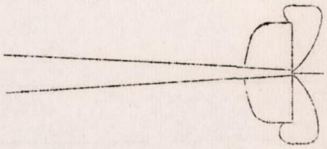

Fig,14

Fig.15

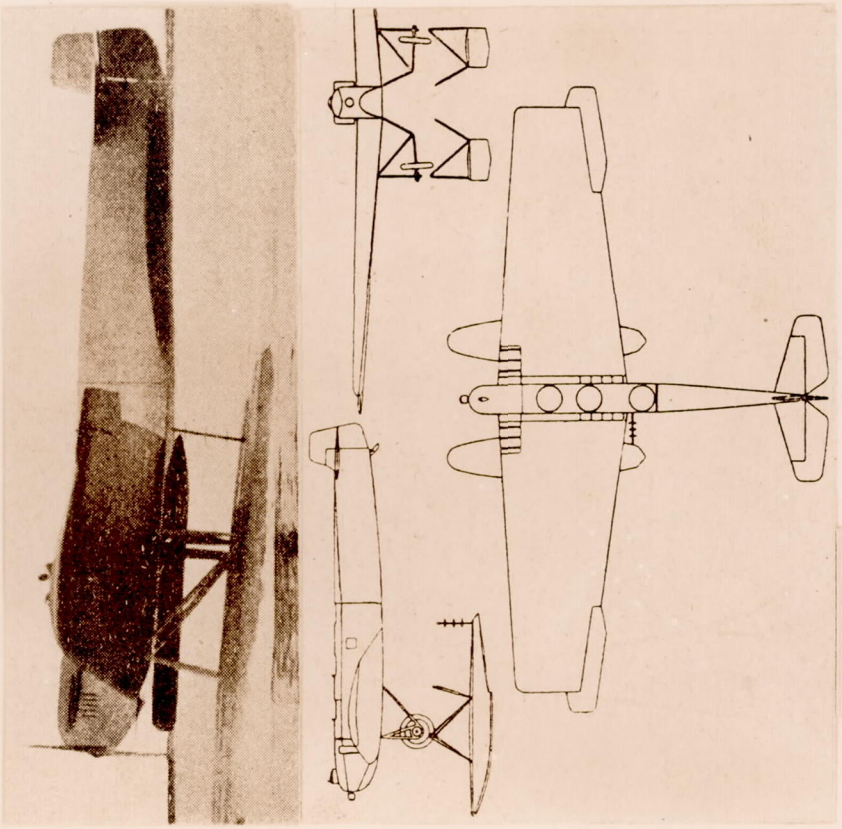

Fig.10

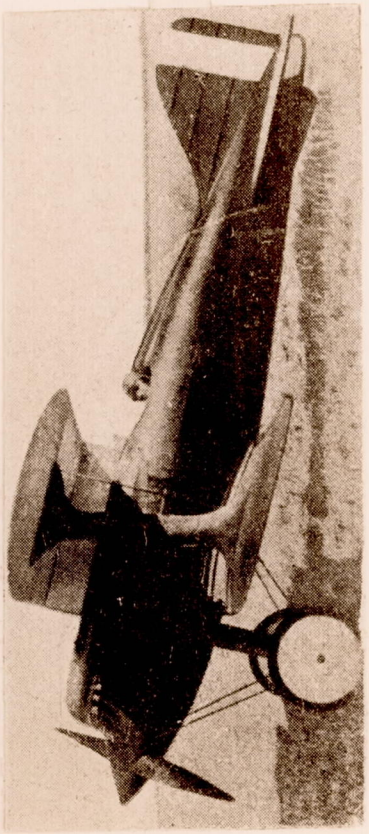

Fig.11

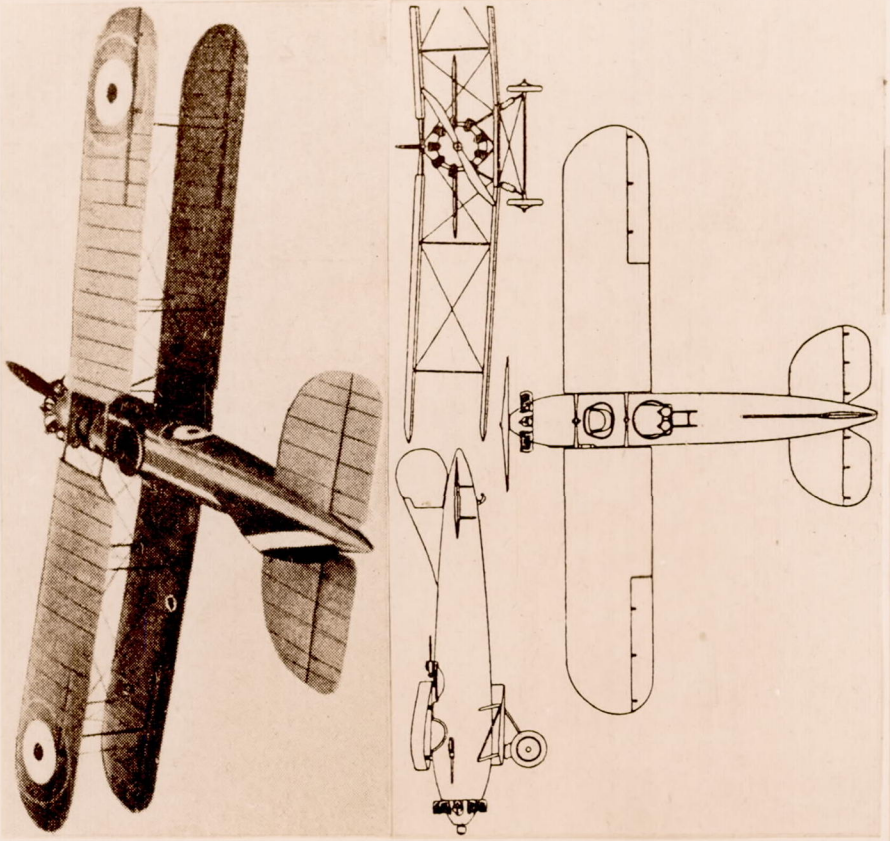

Fig.12