29.1309
Un 34
Y3.N21/5:8/1133

NATIONAL ADVISORY COMMITTEE FOR AERONAUTICS

TECHNICAL MEMORANDUM

No. 1133

METHOD OF CHARACTERISTICS FOR THREE-DIMENSIONAL AXIALLY SYMMETRICAL SUPERSONIC FLOWS

By R. Sauer

Translation
Zentrale für wissenschaftliches Berichtswesen über
Luftfahrtforschung (ZWB) Berlin-Adlershof / Fernruf: 638211,
Forschungsbericht Nr. 1269, z.Zt.Gottingen, den 14.8.1940.

Washington
January 1947

CONN. STATE LIBRARY

FEB 17 1947

NATIONAL ADVISORY COMMITTEE FOR AERONAUTICS

TECHNICAL MEMORANDUM NO. 1133

METHOD OF CHARACTERISTICS FOR THREE-DIMENSIONAL AXIALLY SYMMETRICAL SUPERSONIC FLOWS*

By R. Sauer

ABSTRACT: An approximation method for three-dimensional axially symmetrical supersonic flows is developed; it is based on the characteristics theory (represented partly graphically, partly analytically). Thereafter this method is applied to the construction of rotationally symmetrical nozzles.

OUTLINE:

I. Introduction.

II. Development and description of the method
1. Potential equation of the three-dimensional axially symmetrical supersonic flow
2. Transformation of the potential equation
3. Differential equations of the velocity components
4. Geometrical interpretation
5. Reciprocal nets of lines ("Streckenzugnetze") of the field of flow and of the field of velocity
6. Principle of the approximation method
7. Nomogram for α and $\sin^2\alpha$

III. Application to the construction of rotationally symmetrical nozzles
8. Source flow in the conical nozzle
9. Comparison with the exact solution
10. Correction for parallel outflow

IV. Summary

---

*"Charakteristikenverfahren für räumliche achsensymmetrische Überschallströmungen, Zentrale für wissenschaftliches Berichtswesen über Luftfahrtforschung (ZWB) Berlin-Adlershof / Fernruf: 638211, Forschungsbericht Nr.1269, z.Zt.Gottingen, den 14.8.1940.

I. INTRODUCTION

The plane stationary potential flows of compressible gases which move in every point of the flow field with a velocity larger than the local sound velocity can be treated in a simple was by using the approximate method of Prandtl and Busemann[1]. The corresponding three-dimensional axially symmetrical problem is of practical significance for the construction of rotationally symmetrical nozzles and for the examination of the flow around missiles; so far, however, it has been solved only in special cases or under simplifying assumptions. The axial flow around a cone was treated independently by A. Busemann[2], M. F. Bourquard[3], and G. I. Taylor - J. W. Macoll[4]; Th. v. Kármán - N. B. Moore[5] did examine the axial flow of arbitrary slender bodies of revolution, but in linearized approximation only; C. Ferrari[6] suggested in the discussion at the Volta-congress 1935 an approximation method for the axial flow of bodies of revolution in which Mach's curves were replaced by parabolas.

The present report contains a general nonlinearized approximation method for the three-dimensional axially symmetrical problem which, partly by graphical representation, partly by calculation, gives the flow under prescribed initial conditions by a rapidly converging process of iteration. In the examples that were calculated so far, the accuracy is practically fully sufficient

---

[1] A. Busemann, Gasdynamik, Handbuch der Experimentalphysik IV, 1, S. 421/431, Leipzig 1931, Akademische Verlagsgesellsch.

[2] A. Busemann, Drucke auf Kegelformige Spitzen bei Bewegung mit Überschallgeschwindigkeit. Z.Angew. Math.u.Mech.Bd.9 (1929), S.496/498.

[3] M.F. Bourquard, Ondes Balistiques Planes Obliques et Coniques, Comptes Rendus Paris, Bd. 194 (1932) S.846/848.

[4] G.I. Taylor and J. W. Maccoll, The Air Pressure on a Cone Moving at High Speeds, Proc. Roy.Soc.A, Bd. 139 (1933) S.278/311.

[5] Th.v.Kármán and N.B.Moore, Resistance of Slender Bodies Moving with Supersonic Velocities with Special Reference to Projectiles, Trans.Amer.Soc.Mech.Eng., June 1932.

[6] C. Ferrari, Discussion Comment, Volta-Congress Rome Reports 1936, S.362/366.

after one or two iterations, and is accomplished with proportionately little loss of time.

Mathematically the method, like the approximate method of Prandtl and Busemann, is based on the characteristics theory of the hyperbolic differential equations. In the plane problem, based on a Legendre-transformation, the construction can be achieved by means of a fixed (that is, independent of the initial conditions) net of characteristics of the field of velocity (epicycloid net in the case of ideal gases); in the three-dimensional axially symmetrical problem, however, an analogous simplification is not possible. Rather, both the net of characteristics of the flow field (= net of Mach's curves) and the corresponding net of characteristics of the field of velocity vary with the initial conditions of the flow.

In part II the method is developed theoretically and its practical execution discussed generally. In part III the method is applied to the construction of rotationally symmetrical nozzles. No compression shocks occur; the changes of state may be assumed to be isentropic throughout. There will be a later report on applications of the method with the addition of compression shocks (axial flow of missiles, axially symmetrical free outflow with excess pressure).

II. DEVELOPMENT AND DESCRIPTION OF THE METHOD

1. Potential Equation of the Three-Dimensional Axially Symmetrical Supersonic Flow

The flow is assumed to be stationary, free of friction and vortices, and moreover axially symmetrical in relation to the x-axis. All changes of state are adiabatic, the pressure p is a unique monotonic function $p(\rho)$ of the density ρ. We also assume the flow velocity at every point to exceed the local sound-velocity.

Because of the absence of vortices the vector of velocity $\mathfrak{W}$ may be derived from a potential, therefore

$$\mathfrak{W} = \text{grad } \varphi$$

(Note: $\mathfrak{W}$ was substituted for $\mathfrak{w}$ in the German report.)

Due to axial symmetry, for an introduction of the cylindrical-coordinates x, r, ϑ, the vector MD will only depend on x, r, but not on ϑ, and will always lie in a plane through the x-axis. Consequently the flow is the same in all planes through the x-axis and needs, therefore, to be examined only in one fixed x, r plane. (See fig. 1.) The velocity components u, v and the potential function φ are functions of x and r.

The equation of continuity

$$\operatorname{div}(\rho\, \mathrm{MD}) = 0$$

is specialized, because of the axial symmetry, to

$$\frac{\partial}{\partial r}(r\rho u) + \frac{\partial}{\partial x}(r\rho v) = 0 \tag{2}$$

From this results, after execution of the differentiations and division by ρr,

$$\frac{\partial u}{\partial r} + \frac{1}{r}u + \frac{\partial v}{\partial x} + \frac{1}{\rho}\left(u\frac{\partial \rho}{\partial r} + v\frac{\partial \rho}{\partial x}\right) = 0 \tag{2a}$$

On the other hand, there result from Bernoulli's equation

$$d\left(\frac{u^2 + v^2}{2}\right) + \frac{dp}{\rho} = 0 \tag{3}$$

and from the equation for the velocity of sound

$$c^2 = \frac{dp}{d\rho} \tag{4}$$

the relations

$$\begin{aligned} u\frac{\partial u}{\partial r} + v\frac{\partial v}{\partial r} &= -\frac{1}{\rho}\frac{\partial p}{\partial r} = -\frac{1}{\rho}\frac{dp}{d\rho}\frac{\partial \rho}{\partial r} = -\frac{c^2}{\rho}\frac{\partial \rho}{\partial r} \\ u\frac{\partial u}{\partial x} + v\frac{\partial v}{\partial x} &= -\frac{1}{\rho}\frac{\partial p}{\partial x} = -\frac{1}{\rho}\frac{dp}{d\rho}\frac{\partial \rho}{\partial x} = -\frac{c^2}{\rho}\frac{\partial \rho}{\partial x} \end{aligned} \tag{3a}$$

By inserting (3a) into (2a), and after introducing φ according to (1) there results the potential equation

$$\boxed{\frac{\partial^2\varphi}{\partial x^2}\left[1-\frac{\left(\frac{\partial\varphi}{\partial x}\right)^2}{c^2}\right]+\frac{\partial^2\varphi}{\partial r^2}\left[1-\frac{\left(\frac{\partial\varphi}{\partial r}\right)^2}{c^2}\right]-\frac{2}{c^2}\frac{\partial^2\varphi}{\partial x\partial r}\frac{\partial\varphi}{\partial x}\frac{\partial\varphi}{\partial r}+\frac{1}{r}\frac{\partial\varphi}{\partial r}=0} \qquad (5)$$

This equation differs from the potential equation of the plane problem only be the addition of the last term; naturally it is of hyperbolic type like the last mentioned equation. The last term, however, prevents the Legendre-transformation

$$u = \frac{\partial\varphi}{\partial x}$$

$$v = \frac{\partial\varphi}{\partial r}$$

$$\Phi = ux + vr - \varphi$$

of the differential equation (5) from leading to a net of characteristics independent of the initial conditions and fixed once and for all in the u, v - plane.

2. Transformation of the Potential Equation

We start from Mach's net of curves covering the field of flow and assume in each point P of that field an oblique-angular system of coordinates ξ, η adjusted to Mach's net of curves. (See fig. 2.) The tangents of Mach's curves in P are the axes of the system of coordinates and the positive axis directions include with the flow-vector MD in P the acute Mach angle

$$\alpha = \arcsin\frac{c}{w} < \frac{\pi}{2} \quad \left(w^2 = u^2 + v^2\right) \qquad (6)$$

The potential equation (5) assumes a very simple form when transformed to Mach's net of curves, that is, if

in the first three terms on the left side of (5) the differentiations with respect to x and r are replaced by differentiations in the system of coordinates ξ, η which is variable from point to point. One now obtains the differential equation

$$\boxed{\frac{\partial^2\varphi}{\partial\xi\partial\eta} = \frac{\sin^2\alpha}{r}\frac{\partial\varphi}{\partial r}} \tag{7}$$

upon which further examinations are based.

Derivations from (7):

First, (5) is transformed into a rectangular system of coordinates x', y' in which the lines bisecting the ξ,η system are the axes. (See fig. 3.) Since (5) after elimination of the last term is specialized to the potential equation of the plane flow, in the transition from one rectangular system of coordinates to another rectangular one the form of the left side of (5) does not change, except for the last term.

Therefore, from (5) there results immediately

$$\frac{\partial^2\varphi}{\partial x'^2}\left[1 - \frac{\left(\frac{\partial\varphi}{\partial x'}\right)^2}{c^2}\right] + \frac{\partial^2\varphi}{\partial y'^2}\left[1 - \frac{\left(\frac{\partial\varphi}{\partial y'}\right)^2}{c^2}\right] - \frac{2}{c^2}\frac{\partial^2\varphi}{\partial x'\partial y'}\frac{\partial\varphi}{\partial x'}\frac{\partial\varphi}{\partial y'} + \frac{1}{r}\frac{\partial\varphi}{\partial r} = 0 \tag{8}$$

Because of the coincidence of the velocity vector MD with the x' axis at the point P the equations

$$\frac{\partial\varphi}{\partial x'} = w$$

$$\frac{\partial\varphi}{\partial y'} = 0$$

are valid. Equation (8), by taking (6) into consideration, at the point P is therefore simplified to

$$\cot g^2\,\alpha\,\frac{\partial^2\varphi}{\partial x'^2} - \frac{\partial^2\varphi}{\partial y'^2} = \frac{1}{r}\frac{\partial\varphi}{\partial r} \tag{9}$$

The transition from the x', y' system to the ξ, η system is made by means of the transformation equations easily derived from figure 3.

$$\xi = \frac{1}{2}\left(\frac{x'}{\cos\alpha} - \frac{y'}{\sin\alpha}\right) = \frac{1}{\sin 2\alpha}\left(x' \sin\alpha - y' \cos\alpha\right)$$

$$\eta = \frac{x'}{\cos\alpha} - \xi = \frac{1}{\sin 2\alpha}\left(x' \sin\alpha + y' \cos\alpha\right)$$

and the resulting rules of differentiation

$$\begin{aligned} \frac{\partial}{\partial x'} &= \frac{1}{\sin 2\alpha}\left(\sin\alpha \frac{\partial}{\partial\xi} + \sin\alpha \frac{\partial}{\partial\eta}\right) = \frac{1}{2\cos\alpha}\left(\frac{\partial}{\partial\xi} + \frac{\partial}{\partial\eta}\right) \\ \frac{\partial}{\partial y'} &= \frac{1}{\sin 2\alpha}\left(-\cos\alpha \frac{\partial}{\partial\xi} + \cos\alpha \frac{\partial}{\partial\eta}\right) = \frac{1}{2\sin\alpha}\left(-\frac{\partial}{\partial\xi} + \frac{\partial}{\partial\eta}\right) \end{aligned} \tag{10}$$

By applying (10) twice one gets

$$\frac{\partial^2\varphi}{\partial x'^2} = \frac{1}{4\cos^2\alpha}\left(\frac{\partial^2\varphi}{\partial\xi^2} + \frac{\partial^2\varphi}{\partial\eta^2} + 2\frac{\partial^2\varphi}{\partial\xi\partial\eta}\right)$$

$$\frac{\partial^2\varphi}{\partial y'^2} = \frac{1}{4\sin^2\alpha}\left(\frac{\partial^2\varphi}{\partial\xi^2} + \frac{\partial^2\varphi}{\partial\eta^2} - 2\frac{\partial^2\varphi}{\partial\xi\partial\eta}\right)$$

and by insertion of these terms (9) will become (7), the relation to be proved.

It should be noted that the general theory of the three-dimensional axially symmetrical supersonic flows as well as the linearized approximation theory can be based on the potential equation (7). In the first case, α and the ξ,η system of coordinates are variable from point to point; in the second case a constant mean value is inserted and the ξ, η system of coordinates is assumed fixed for the whole region considered.

3. Differential Equations of the Components of Velocity

From the potential equation (7) differential equations for the vector of velocity are derived. To this end the vector MD of the point P is split up into the

components $w_{\xi p}$, $w_{\xi n}$, parallel and perpendicular to the ξ axis and into the components $w_{\eta p}$, $w_{\eta n}$, parallel and perpendicular to the η axis, respectively, (fig. 4); naturally,

$$w_{\xi p} = w_{\eta p}$$

$$w_{\xi n} = w_{\eta n}$$

The changes of the components $w_{\xi p}$, $w_{\eta p}$ that take place when the point P is displaced while the ξ, η system is retained are denoted by the differential quotients

$$\frac{\partial w_{\xi p}}{\partial \xi}, \quad \frac{\partial w_{\xi p}}{\partial \eta}, \quad \frac{\partial w_{\eta p}}{\partial \xi}, \quad \frac{\partial w_{\eta p}}{\partial \eta}$$

Then there results from (7)

$$\boxed{\frac{\partial w_{\xi p}}{\partial \eta} = \frac{\partial w_{\eta p}}{\partial \xi} = \frac{\sin^2 \alpha}{r} v} \tag{11}$$

where v, as in figure 1, signifies the velocity component perpendicular to the axis of symmetry.

Derivation from (11):

First, any two points P', P" on the axes of the ξ, η system of coordinates pertinent to the point P are considered. For the components of the velocity vectors MD', MD" of these points parallel to the coordinate axes (fig. 5) one has

$$w'_{\xi p} = \left(\frac{\partial \varphi}{\partial x'}\right)_{P'} \cos \alpha - \left(\frac{\partial \varphi}{\partial y'}\right)_{P'} \sin \alpha$$

$$w''_{\eta p} = \left(\frac{\partial \varphi}{\partial x'}\right)_{P''} \cos \alpha + \left(\frac{\partial \varphi}{\partial y'}\right)_{P''} \sin \alpha$$

and, taking (10) into consideration,

$$w'_{\xi p} = \left(\frac{\partial\varphi}{\partial\xi}\right)_{P'}$$

$$w'_{\eta p} = \left(\frac{\partial\varphi}{\partial\eta}\right)_{P''}$$

By moving the points P', P'' towards P there results for the differential quotients taken at P

$$\frac{\partial\varphi}{\partial\xi} = w_{\xi p}$$

$$\frac{\partial\varphi}{\partial\eta} = w_{\eta p}$$

and, by differentiating again,

$$\frac{\partial^2\varphi}{\partial\xi\,\partial\eta} = \frac{\partial w_{\xi p}}{\partial\eta} = \frac{\partial w_{\eta p}}{\partial\xi}$$

By inserting these terms, equation (7) changes to the equation that had to be proved, (11).

4. Geometrical Interpretation

In order to interpret the differential equations (11) in a graphical way, we replace them by the difference equations

$$\boxed{\begin{aligned} \Delta w_{\xi p} &= \frac{\sin^2\alpha}{r}\, v\Delta\eta \\ \Delta w_{\eta p} &= \frac{\sin^2\alpha}{r}\, v\Delta\xi \end{aligned}} \qquad (12)$$

In words, they can be described as follows: (See fig. 6.)

In order to transfer from the velocity vector MD of a point P to the velocity vector MD' of an adjacent point P' on Mach's line of the first group (ξ axis),

the vector $\Delta w_{\eta p}$ which can be calculated from (12) must be added to the vector MD in the direction of Mach's line of the second group (η axis). Moreover, another vector $\Delta w_{\eta n}$ is added perpendicular to $\Delta w_{\eta p}$. The length of this vector, however, is not determined by the differential equations (12).

The analogous relations are valid for the transition from MD to the vector of velocity MD" of an adjacent point P" on Mach's line of the second group (η axis).

At a great distance (r) from the axis of symmetry the last term $\frac{1}{r}\frac{\partial\varphi}{\partial r}$ of the potential equation (5) is negligible. The three-dimensional axially symmetrical problem is then specialized to the plane problem and the equations (12) are replaced by the simpler equations

$$\Delta w_{\xi p} = \Delta w_{\eta p} = 0$$

They express the following well known state of plane supersonic flows. (See fig. 7.)

The difference vector MD' - MD is perpendicular to the Mach line of the second group (η axis) which goes through P; the difference vector MD" - MD is perpendicular to the Mach line of the first group (ξ axis).

5. Reciprocal Nets ("Streckenzugnetze") of the Flow Field and the Velocity Field

Here also, as in the method of Prandtl and Busemann, the continous net of Mach's curves will be replaced by a net of discrete lines which will be called, abbreviately, Mach's net. Constant velocity of flow is assumed in each mesh of Mach's net. To each mesh of Mach's net there corresponds, therefore, a certain point of the field of velocity that is the end point of the vector of velocity MD drawn from a fixed zero point O. By this correspondence a second net of lines is related in the field of velocity to Mach's net of the field of flow. (See fig. 8.) This second net will be called the velocity net.

While in the plane problem corresponding lines of the two nets are always perpendicular to each other, in the three-dimensional axially symmetrical case the relation between the two nets is determined by the difference equations (12). For every three quadrangles of Mach's net 1,2,3 having a common corner P and their corresponding points 1,2,3 in the field of velocity there exists the relation shown in figure 9 based on these equations.

If one draws the lines $\Delta w_{\xi p}$ and $\Delta w_{\eta p}$, respectively, at the end points 1.2 of the vectors MD_1, MD_2 parallel to the common sides of the quadrangles 1.3 and 2.3, respectively, the perpendicular lines erected at the end points of these lines will intersect the end point 3 of the vector MD_3.

In the determinative equations (12) for $\Delta w_{\xi p}$, $\Delta w_{\eta p}$ the following terms will have the following meanings:

α 1/2 of the angle of the quadrangle 3 at the corner P

r distance of the center of the sides M_{13} or M_{23} from the axis of symmetry

v component of the mean velocity vector $\frac{MD_1 + MD_3}{2}$ or $\frac{MD_2 + MD_3}{2}$ perpendicular to the axis of symmetry

$$\left.\begin{aligned} \Delta\xi &= S_2S_3 \\ \Delta\eta &= S_1S_3 \end{aligned}\right\}$$ S_1, S_2, S_3 = intersections of the diagonals of the quadrangles 1,2,3

The signs of $\Delta\xi$, $\Delta\eta$ and of $\Delta w_{\xi p}$, $\Delta w_{\eta p}$ must be chosen according to the stipulation established in paragraph 2 with regard to the positive direction on the ξ and η axes.

6. Principle of the Approximation Method

The problem of finding a three-dimensional axially symmetrical supersonic flow with given initial conditions is replaced by the task of ascertaining two nets of reciprocally related lines in the way described in paragraph 5.

The nets of lines in question can be constructed to any degree of accuracy by the following method of iteration.

(a) First approximation (M_I), (G_I).- A rough first approximation is obtained by determining the flow either for the whole field of flow or in linearized approximation by zones. One then obtains a net of parallelograms formed by two groups of parallel straight lines as a first approximation of Mach's net (M_I). The first approximation of the net of velocity (G_I) results from the equations (12) with Mach's constant angle α with the ξ, η system of coordinates remaining constant. For the execution in detail compare paragraph 8(a).

(b) Second approximation of Mach's net (M_{II}).- Mach's directions are drawn at the intersections of diagonals of the quadrangles of Mach's net of the first approximation (M_I). (See fig. 10.) These directions result from the vectors MD of the corresponding points of the first approximation of the velocity net (G_I). They are obtained by means of the subsidiary ellipse explained in paragraph 7. The first approximation of Mach's net is corrected by interpolation between the new Mach directions, and a second net of lines is obtained as the second approximation of Mach's net (M_{II}).

(c) Second approximation of the velocity net (G_{II}).- The increments $\Delta w_{\xi p}$ and $\Delta w_{\eta p}$ are calculated with the aid of the equations (12). The lengths $\Delta\xi$, $\Delta\eta$ and r are taken from the second approximation of Mach's net (M_{II}) according to paragraph 5. Both v and $\sin^2\alpha$ result from the first approximation for the velocity net (G_I). When v is the component of the mean vectors of velocity $\frac{MD_1 + MD_3}{2}$, $\frac{MD_3 + MD_2}{2}$, etc. (fig. 9) perpendicular to the axis of symmetry; $\sin^2\alpha$ of the vectors $\frac{MD_1 + MD_3}{2}$ $\frac{MD_3 + MD_2}{2}$ etc. is determined by means of a nomogram according to paragraph 7. Starting from the given initial conditions, the second approximation of the velocity net (G_{II}) can then be built up step by step from the calculated lengths $\Delta w_{\xi p}$, $\Delta w_{\eta p}$: to any two vectors MD_1, MD_2 the additional vector MD_3 is constructed according to figure 9.

(d) Third and higher approximations.- Third approximations may be derived in the same way as the second approximations were obtained from the first approximations, etc. The construction is discontinued as soon as Mach's net of the last approximation conforms to Mach's net of the following approximation within the limits of accuracy of construction and interpolation.

The rule of construction is made clear in section III by examples of application which demonstrate the rapid convergence of the method. The construction ends with sufficient accuracy after a few iterations which involve only a moderate loss of time.

The necessary calculations consist of multiplications and divisions only; the accuracy of an ordinary sliderule is ample.

7. Nomogram for α and $\sin^2 \alpha$ as a Function of MD

As usual, a subsidiary ellipse traced out on transparent paper or celluloid (fig. 11) is used to ascertain Mach's angle, under the assumption of the isentropic equation of the ideal gases. On the scale chosen for the velocity net the small half-axis of the ellipse corresponds to the critical velocity c^* and the large half-axis to the maximal speed w_{max}; there exists the known relation

$$c^*/w_{max} = \sqrt{\frac{k - 1}{k + 1}}$$

with $k = c_p/c_v$ (c_p, c_v = specific heats at constant pressure and volume, respectively).

If the subsidiary ellipse is adjusted to a velocity vector (two solutions) the large axis indicates the direction of the one coordinated Mach direction; the corresponding value of $\sin^2 \alpha$ may be read from a circular scale rigidly connected to the ellipse.

The ellipse is used for drawing in the corrected Mach directions into Mach's net according to paragraph 6b (adjustment of the vectors MD_1, MD_2, etc. of the velocity net); it is also used for definition of $\sin^2 \alpha$

according to paragraph 6(c) (adjustment of the vectors $\frac{MD_1 + MD_3}{2}$, $\frac{MD_2 + MD_3}{2}$, etc).

III. APPLICATION OF THE METHOD TO THE CONSTRUCTION OF ROTATIONALLY SYMMETRICAL NOZZLES

(1) The axially symmetrical source flow in a conical nozzle,

(2) The correction of the conical nozzle for parallel outflow will be treated as examples of application.

The axially symmetrical source flow was chosen for the reason that it can also be determined by exact calculation so that both results can be compared.

In the case of the nozzle corrected for parallel outflow the course of flow cannot be compared in detail with an exact solution. There is, however, an effective control supplied by the diameter of the exit cross section which can easily be calculated from the condition of continuity.

8. Source Flow in Conical Nozzle

The conical nozzle is to have the half angle $w = \text{arc tan } 1/8$; its meridian section is shown in figure 12. The cone vertex is assumed to lie at the initial point of the x, r system of coordinates.

The following initial conditions are prescribed:

The initial velocity along the arc circling the cone vertex which goes through the meridian point A ($x = 40$ cm, $r = 5$ cm) is given by the Mach number $M_a = w_a/c_a = \sqrt{2} \approx 1.41$; then along this arc there is in addition

$$\alpha_a = 45^\circ, \; M_a^* = \frac{w_a}{c^*} \approx 1.308 \; (c^* = \text{critical veloctiy})$$

The direction of the critical velocity is presumed to be purely radial, that is, coming from the cone vertex.

(a) First approximation.- In a first approximation the flow is determined according to the linearized theory that is under the assumption of a Mach angle constant for the whole region $\alpha = \alpha_a$.

Mach's net (M_I) (fig. 12) consists of parallelograms limited by parallel straight lines with the inclination $\pm\alpha_a = \pm 45^\circ$ toward the x-axis. Only half of the parallelograms adjacent to the initial arc of circle, the meridian line, or the axis of symmetry are drawn in figure 12.

The vector of velocity for the meshes of the net on the initial arc (1,2) is given by the initial conditions and can be transferred into the velocity net (G_o) or (G_I), respectively. (See fig. 12.) The vector of velocity for the rest of the meshes is constructed section by section from $\Delta w_{\xi p}$, $\Delta w_{\eta p}$; as a boundary condition, the fact has to be considered that for the meshes of the net adjacent to the contour (5,9) and to the axis of symmetry, respectively, (1,4,8,12) the direction of velocity is given by the contour and the axis of symmetry, respectively.

The calculation of $\Delta w_{\xi p}$ and $\Delta w_{\eta p}$ according to (12) is performed in approximation in table 1.

In column 1 the numbers of the two adjacent meshes of Mach's net are given for which $\Delta w_{\xi p}$ and $\Delta w_{\eta p}$, respectively, are to be calculated. The values of r and $\Delta\eta$, $\Delta\xi$ in the second and third column are taken from (M_I) according to paragraph 5. In the fourth column we find values crudely estimated $v^{(o)}$; $\Delta w_{\xi p}{}^{(o)}$ and $\Delta w_{\eta p}{}^{(o)}$ in the fifth column are calculated from these values by means of the sliderule, based on the relations $\Delta w_{\xi p} = \frac{\sin^2\alpha_a}{r} v\Delta\eta = \frac{v}{2r}\Delta\eta$, $\Delta w_{\eta p} = \frac{\sin^2\alpha_a}{r} v\Delta\xi$ $\frac{v}{2r}\Delta\xi$

The net of velocity (G_o) in figure 12 is constructed from the rough approximation values $\Delta w_{\xi p}{}^{(o)}$ and $\Delta w_{\eta p}{}^{(o)}$

of column 5. From this net of velocity (G_o) corrected values $v^{(1)}$ are inserted into the sixth column. And corrected values $\Delta w_{\xi p}{}^{(1)}$ and $\Delta w_{\eta p}{}^{(1)}$ are calculated from $v^{(1)}$ in column 7. These values supply the corrected net of velocity (G_I) in figure 12 which will be used as a starting net for the general nonlinear approximation method.

(b) Second approximation of Mach's net.- Corrected Mach directions are determined from the velocity net (G_I) (fig. 12) according to paragraph 6(b). A subsidiary ellipse is used. The corrected directions are drawn in the Mach net (M_I). (See fig. 12.) By interpolation between these corrected Mach directions there results the second approximation of Mach's net (M_{II}). (See fig. 13.)

(c) Second approximation of the velocity net.- The corrected velocity net (G_I') (fig. 13) instead of (G_I) will be used for the first iteration in order to accelerate the convergence. (G_I') is constructed point by point by transferring the diagonal intersections of the meshes of the net (M_{II}) to (M_I); the corresponding vectors of velocity are then ascertained from (G_I) by interpolation.

$\Delta w_{\xi p}$, $\Delta w_{\eta p}$ are calculated from (M_{II}) and (G_I') according to table 2; the corrected velocity net (G_{II}) is then constructed from the lengths calculated in this way. (See fig. 13.)

(d) Third approximation.- Newly corrected Mach directions are drawn in (M_{II}) in the next iteration step according to (G_{II}). By interpolation there results the third approximation of Mach's net (M_{III}). (See fig. 14.) In table 3 the lengths $\Delta w_{\xi p}$, $\Delta w_{\eta p}$ are calculated again, based on (M_{III}) and (G_{II}); hereby the third approximation of the velocity net (G_{II}) is supplied. (See fig. 14.)

The corrected Mach directions obtained from (G_{III}) conform so well with the net (M_{III}) that no further iteration is necessary.

TABLE 1

FLOW IN A CONICAL NOZZLE

[First approximation (linearized); compare figure 12]

1	2	3	4	5	6	7
No.	2r	$\frac{\Delta\xi}{\Delta\eta}$	$v^{(o)}$	$\Delta w_p^{(o)}$	$v^{(1)}$	$\Delta w_p^{(1)}$
1/3	1.7	2.2	0.03	0.039	0.03	0.039
2/3	4.9	2.5	.08	.042	.08	.041
3/4	1.5	2.3	.03	.046	.03	.046
2/5	8.2	2.7	.12	.039	.15	.049
5/6	8.7	2.5	.14	.040	.15	.043
3/6	4.7	2.7	.08	.046	.09	.052
6/7	5.3	2.3	.08	.035	.08	.035
4/7	1.5	2.7	.02	.036	.03	.054
7/8	2.3	2.7	.03	.035	.03	.035
6/9	9.4	3.2	.15	.051	.17	.056
9/10	9.8	2.3	.18	.042	.19	.045
7/10	6.0	3.2	.09	.048	.11	.059
10/11	6.8	2.7	.14	.056	.15	.060
8/11	2.2	3.2	.02	.029	.06	.087
11/12	2.3	3.2	.07	.098	.07	.097

Formula: $\Delta w_p = \frac{v}{2r} \begin{cases} \Delta\xi \\ \Delta\eta \end{cases}$

Scales: r, $\Delta\xi$, $\Delta\eta$ in [cm]; v, Δw_p are referred to the critical velocity as a unit represented by a length of 10 cm.

TABLE 2

FLOW IN A CONICAL NOZZLE

[Second approximation; compare figure 13]

1	2	3	4	5	6
No.	r	$\Delta\xi$ $\Delta\eta$	$\sin^2\alpha$	v	$\Delta w_p'$
1/3	0.8	2.0	0.45	0.02	0.022
2/3	2.0	1.9	.45	.06	.025
3/4	.5	2.3	.33	.08	.046
5/6	3.9	1.5	.44	.13	.022
2/6	2.9	1.5	.44	.10	.022
6/7	3.0	2.2	.34	.11	.026
3/7	1.8	1.8	.35	.08	.029
7/8	1.6	2.5	.27	.08	.035
4/8	.6	2.0	.24	.03	.024
8/9	.5	2.2	.21	.02	.018
5/10	4.7	1.3	.40	.16	.018
10/11	4.8	1.6	.32	.18	.019
6/11	3.9	1.4	.34	.15	.018
11/12	3.9	2.4	.27	.17	.029
7/12	2.8	1.6	.28	.13	.021
12/13	2.5	2.8	.22	.14	.034
8/13	1.6	2.0	.21	.09	.024
13/14	1.6	2.7	.18	.09	.027
9/14	.6	2.5	.18	.03	.028
14/15	.5	3.2	.15	.04	.038
11/16	4.9	1.8	.28	.19	.020
16/17	5.1	2.7	.25	.19	.030
12/17	3.8	2.1	.24	.17	.023
17/18	3.7	3.0	.20	.16	.027
13/18	2.6	2.2	.19	.13	.020
18/19	2.7	3.0	.17	.12	.024
14/19	1.6	2.5	.16	.08	.020
19/20	1.5	3.5	.15	.07	.025
15/20	.6	2.8	.14	.02	.014
20/21	.5	3.2	.13	.02	.016

Formula: $\Delta w_p = \frac{\sin^2\alpha}{r} v \begin{Bmatrix} \Delta\xi \\ \Delta\eta \end{Bmatrix}$

Scales: as in table 1.

TABLE 3

FLOW IN A CONICAL NOZZLE

[Third approximation; compare figure 14]

1	2	3	4	5	6
No.	r	$\frac{\Delta\xi}{\Delta\eta}$	$\sin^2\alpha$	v	Δw_p
1/4	0.6	2.1	0.46	0.02	0.032
2/5	2.9	1.7	.47	.09	.026
1/5	1.8	1.6	.47	.06	.026
5/6	1.7	2.1	.42	.06	.032
4/6	.6	1.8	.40	.02	.023
6/7	.5	2.2	.35	.01	.015
3/8	4.6	1.4	.47	.15	.021
2/8	3.8	1.3	.47	.12	.020
8/9	3.9	1.8	.42	.13	.025
5/9	2.8	1.5	.42	.10	.022
9/10	2.7	2.3	.37	.09	.028
6/10	1.6	1.6	.36	.06	.022
10/11	1.5	2.2	.32	.05	.024
7/11	.5	1.7	.32	.01	.017
11/12	.5	2.1	.30	.01	.013
8/13	4.8	1.5	.42	.12	.015
13/14	4.9	1.9	.38	.17	.025
9/14	3.8	1.6	.38	.14	.022
14/15	3.7	2.5	.34	.13	.030
10/15	2.6	1.7	.33	.10	.022
15/16	2.5	2.4	.30	.09	.026
11/16	1.5	1.9	.30	.06	.023
16/17	1.5	2.1	.27	.05	.019
12/17	.5	1.9	.27	.01	.009
17/18	.5	2.1	.25	.02	.021
14/19	4.9	2.3	.34	.17	.028
19/20	5.1	2.7	.30	.17	.027
15/20	3.6	2.4	.30	.13	.026
20/21	3.9	2.7	.27	.12	.022
16/21	2.5	2.7	.27	.08	.025
21/22	2.9	2.1	.25	.09	.017
17/22	1.5	2.8	.25	.06	.028
22/23	2.0	2.3	.23	.05	.014
18/23	.5	2.9	.23	.01	.014
23/24	1.0	3.8	.22	.03	.027

Formula: }
Scales: } as in table 2.

9. Comparison with the Exact Solution

The flow in a conical nozzle which was determined by approximation in paragraph 8 is a three-dimensional source flow and can also be found by exact calculation. If R denotes the distance from the cone vertex there results from the continuity equation

$$\frac{d}{dR}(\rho w) + 2\frac{\rho w}{R} = 0$$

and the ρw relation of the ideal gases

$$w^2 = \frac{2k}{k-1}\frac{p_o}{\rho_o}\left[1 - \left(\frac{\rho}{\rho_o}\right)^{k-1}\right]$$

(p_o, ρ_o = static values; $k = c_p/c_v$) after a short calculation

$$R = C \times \left(\frac{w}{c^*}\right)^{-1/2}\left[1 - \frac{k-1}{k+1}\left(\frac{w}{c^*}\right)^2\right]^{-\frac{1}{2(k-1)}}$$

with the integration constant C. In our example $c \approx 30.31$ cm and $k = 1.405$ (air) are to be used.

A comparison of the solution obtained by our approximation method with the exact analytical solution shows almost complete conformity within the limits of accuracy of construction.

In figure 14 the third approximation of the velocity net (G_{III}) is contrasted with the exact velocity net (G_{theor}). The inaccuracy of the approximations (G_I), (G_{II}), (G_{III}) can be seen in the following table where the velocities again are referred to the critical velocity c^* as a unit.

TABLE 4

First approximation			Second approximation			Third approximation		
No.	w_{G_I}	w_{theor}	No.	$w_{G_{II}}$	w_{theor}	No.	$w_{G_{III}}$	w_{theor}
16	1.58	1.48	16	1.46	1.48	19	1.53	1.54
17	1.66	1.55	17	1.52	1.55	20	1.59	1.59
18	1.76	1.61	18	1.58	1.61	21	1.64	1.64
19	1.83	1.67	19	1.62	1.67	22	1.68	1.68
20	1.89	1.73	20	1.67	1.73	23	1.72	1.72
21	1.93	1.78	21	1.71	1.78	24	1.78	1.78

It is especially remarkable that the method converges rapidly in spite of the very crude first approximation. It is, therefore, not necessary to waste much time on finding the first approximation; it is sufficient to determine it by a rough estimate.

10. Correction of the Conical Nozzle for Parallel Outflow

The conical nozzle is now corrected for parallel outflow; the velocity of the parallel exhaust is to be given by the Mach number $M = 2.12$ which had been obtained at the axis point 18 of the conical nozzle in conformity with the third approximation (M_{III}), (G_{III}). (See fig. 14.)

The corrected nozzle results from adjoining a new Mach net (M^*) to the Mach net (M_{III}) of the conical nozzle retained unchanged up to mesh 18 inclusive. (Compare figs. 15 and 16.) The net (M^*) is determined according to our approximation by the new boundary conditions; these latter stipulate that in the meshes 14 - 18 of the net (M_{III}) the velocity shall remain unchanged and that in the newly added meshes, denoted 18, the same velocity shall prevail as in mesh 18 of the net (M_{III}).

(a) The first approximation (M_I^*) of Mach's net (fig. 15) is roughly estimated; the common sides of the quadrangles 14, 15, 16, 17, 18 were prolonged rectilinearily from (M_{III}). (M_I^*) is not a net of parallelograms. The first approximation is, therefore, not linearized.

Based on (M_I^*) $\Delta w_{\xi p}$, $\Delta w_{\eta p}$ are calculated in table 5; $\sin^2\alpha$ and v always stand for the first of the two meshes given in column 1. From $\Delta w_{\xi p}$, $\Delta w_{\eta p}$ the velocity net (G_I^*) can be constructed. (See fig. 15.) For greater clearness (G_I^*) is drawn in 3 parts over one another.

(b) (c) In the same way as (M_{II}) and (G_{II}) were derived by iteration from (M_I) and (G_I') in paragraph 8, here the corrected nets (M_{II}^*) and (G_{II}^*) (fig. 16) are obtained from (M_I^*) and (G_I^*). The pertinent calculation of $\Delta w_{\xi p}$, $\Delta w_{\eta p}$ is given in table 6.

TABLE 5

CORRECTION OF THE CONICAL NOZZLE FOR PARALLEL OUTFLOW

[First approximation (not linearized); compare figure 15]

1	2	3	4	5	6
No.	r	$\frac{\Delta\xi}{\Delta\eta}$	$\sin^2\alpha$	v	Δw_p
18/19	2.0	-2.3	0.00	0.00	-0.000
17/19	1.5	2.8	.25	.04	.020
19/20	2.9	-2.2	.23	.04	-.007
16/20	2.5	2.7	.27	.07	.022
20/21	3.9	-2.7	.25	.08	-.014
15/21	3.6	2.5	.30	.10	.020
21/22	5.1	-2.8	.27	.13	-.020
14/22	4.8	2.3	.35	.14	.023
18/23	3.9	-2.3	.00	.00	-.000
19/23	3.4	3.6	.23	.04	.011
23/24	4.8	-2.3	.23	.03	-.003
20/24	4.2	3.5	.25	.08	.019
24/25	5.7	-2.9	.24	.07	-.009
21/25	5.3	3.3	.27	.13	.023
18/26	5.8	-2.4	.00	.00	-.000
23/26	5.3	3.7	.23	.03	.005
26/27	6.6	-2.4	.22	.02	-.002
24/27	6.2	3.6	.24	.07	.011

Formula:
Scales: } as in table 2.

TABLE 6

CORRECTION OF THE CONICAL NOZZLE FOR PARALLEL OUTFLOW

[Second approximation; compare figure 16]

1	2	3	4	5	6
No.	r	$\frac{\Delta\xi}{\Delta\eta}$	$\sin^2\alpha$	v	Δw_p
18/19	2.0	-2.1	0.23	0.02	-0.004
17/19	1.6	2.7	.24	.04	.016
19/20	2.9	-2.2	.24	.06	-.011
16/20	2.6	2.6	.25	.08	.021
20/21	3.9	-2.6	.26	.10	-.018
15/21	3.7	2.5	.29	.11	.022
21/22	5.3	-2.7	.30	.15	-.022
14/22	4.9	2.4	.33	.16	.024
18/23	3.7	-2.2	.23	.01	-.001
19/23	3.2	3.6	.23	.03	.007
23/24	4.7	-2.4	.23	.05	-.005
20/24	4.3	3.6	.25	.07	.014
24/25	5.8	-3.0	.25	.08	-.009
21/25	5.5	3.3	.26	.12	.020
18/26	5.5	-2.3	.22	.01	-.001
23/26	5.1	3.8	.22	.02	.004
26/27	6.6	-2.6	.23	.03	-.003
24/27	6.2	3.7	.24	.06	.011

Formula:
Scales: } as in table 2.

The Mach directions corrected according to (G_{II}^*) conform so well with (M_{II}^*) that the iteration with (M_{II}^*) can be discontinued.

The required meridian section of the nozzle corrected for parallel outflow is found by drawing straight lines in the meshes 22, 25, 24, 27, 26 of the net (M_{II}^*); these lines run in the direction of the velocity vectors that correspond to these meshes as inferred from (G_{II}^*).

For control, the diameter of the exhaust cross section can be calculated exactly from the condition of continuity. There results nearly complete agreement:

r graphically = 6.55 cm; r theoretically = 6.49 cm

In figure 17 the rotationally symmetrical nozzle corrected for parallel outflow which was found in figure 16 is contrasted with the corresponding plane nozzle. In both cases the flow starts under the same geometric initial conditions as a source flow with $M_a = \sqrt{2} \approx 1.41$ and ends in a parallel outflow with the same Mach number $M = 2.12$.

IV. SUMMARY

The potential equation was transformed into a system of coordinates adjusted to Mach's net of curves and variable from point to point; there resulted a partly graphical, partly analytical method of iteration for determining three-dimensional axially symmetrical supersonic flows. This method was applied to the examination of the flow in a conical nozzle and to the correction of a conical nozzle for a parallel outflow. It will take about an hour to determine the first approximation of the flow in the conical nozzle and 1 to 2 hours to determine all the higher approximations; the correction of the nozzle for parallel outflow also is easily accomplished in 1 to 2 hours. The accuracy of the approximation method was tested by comparing the results with the exact theoretical ones; there resulted within the accuracy of construction nearly complete agreement.

Translated by Mary L. Mahler
National Advisory Committee
for Aeronautics

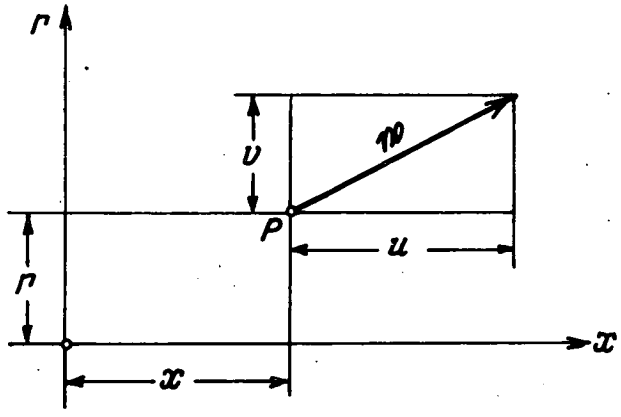

Figure 1. Explanation of the notations.

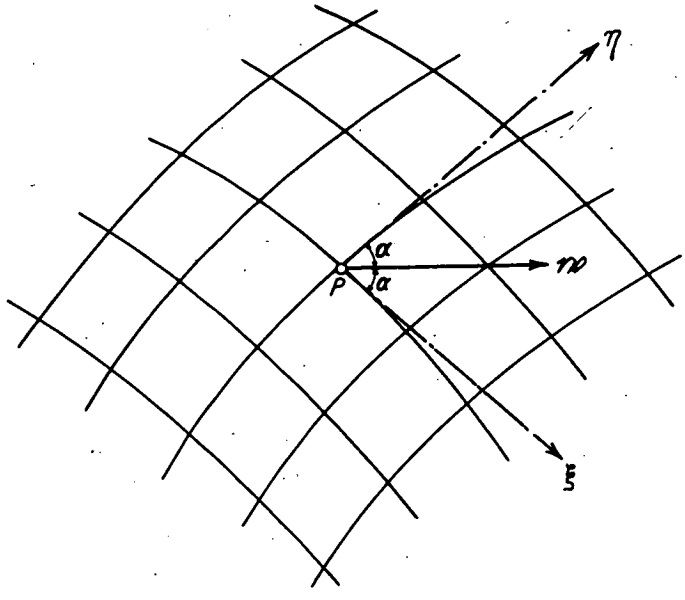

Figure 2. ξ, η system of coordinates of Mach's net of curves.

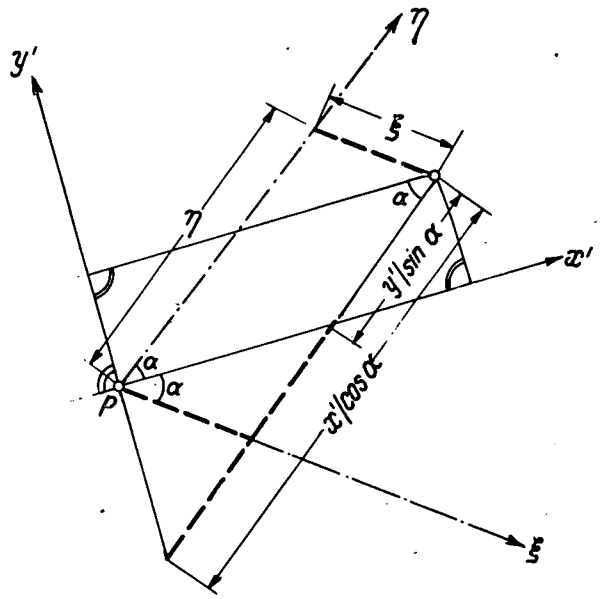

Figure 3. Transformation of coordinates.

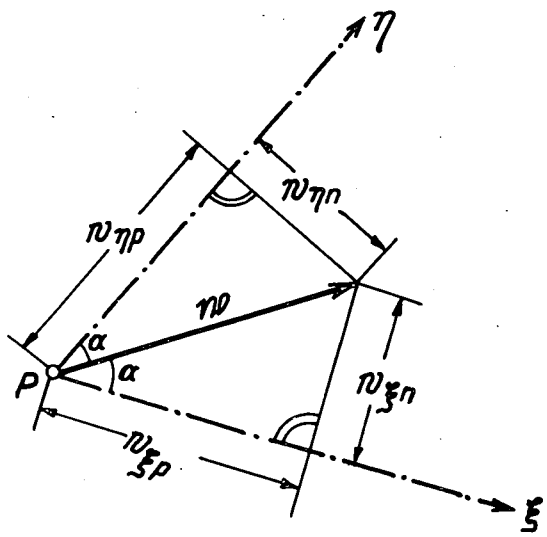

Figure 4. Components of velocity parallel and perpendicular to the ξ axis and the η axis.

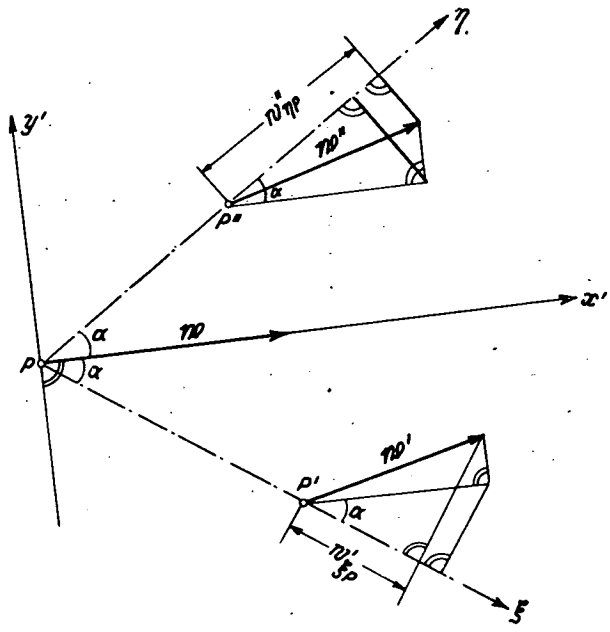

Figure 5. Differeniation of the velocity with respect to ξ and η.

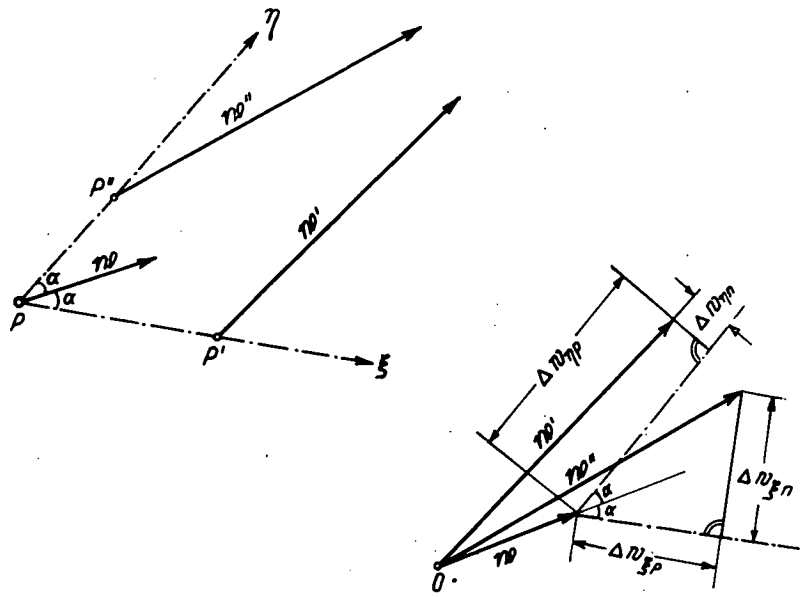

Figure 6. Change of the velocities along Mach's lines in the three-dimensional problem.

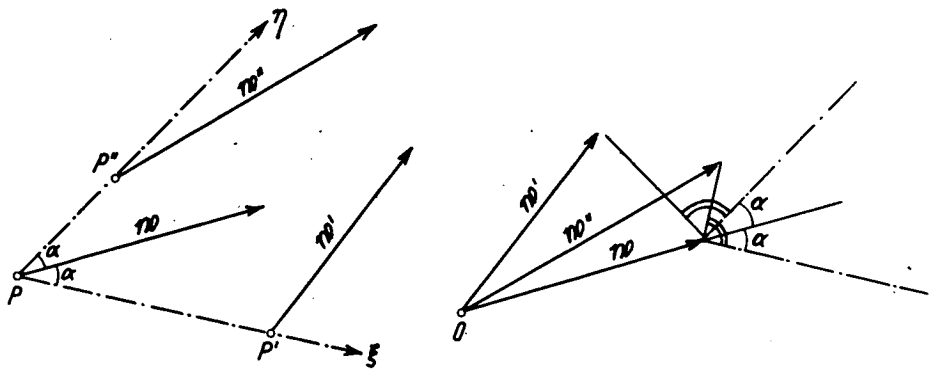

Figure 7. Change of the velocities along Mach's lines in the plane problem.

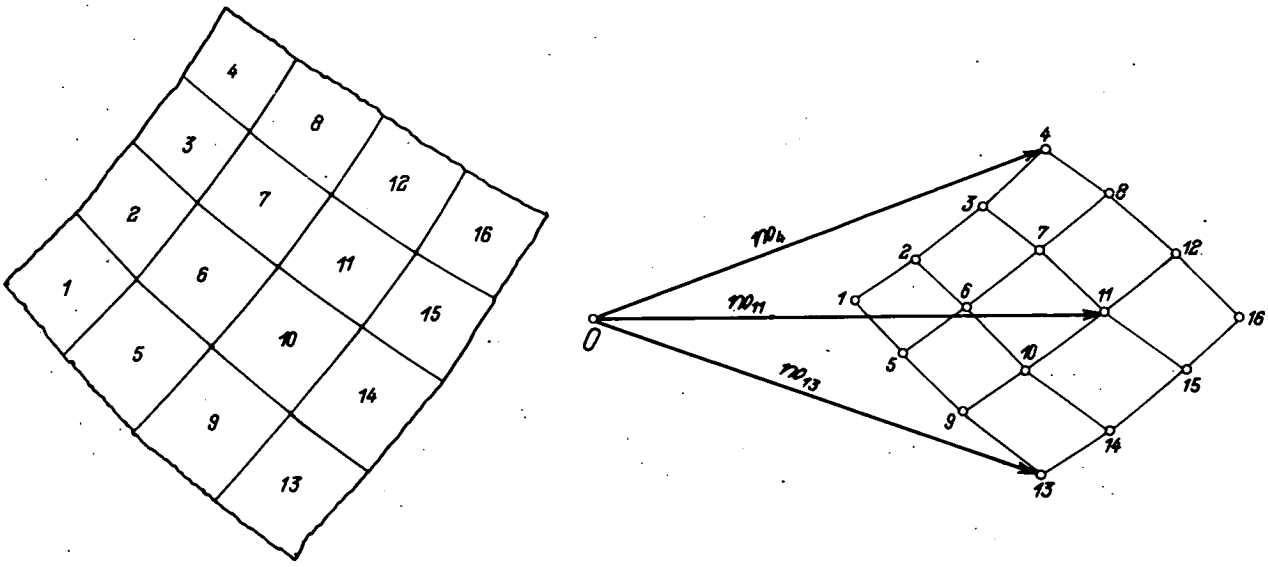

Figure 8. Mach's net and velocity net.

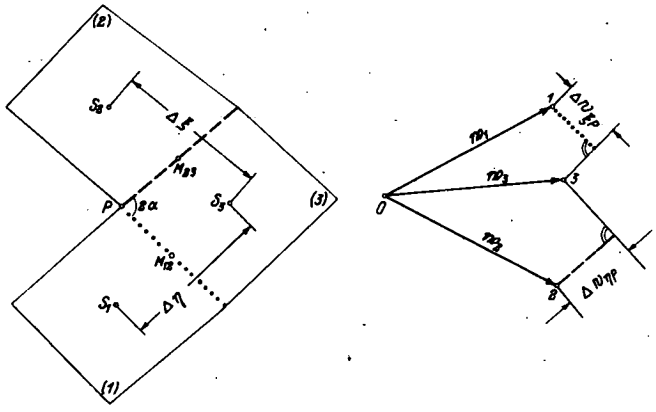

Figure 9. Distribution of velocity for three adjacent meshes of Mach's net.

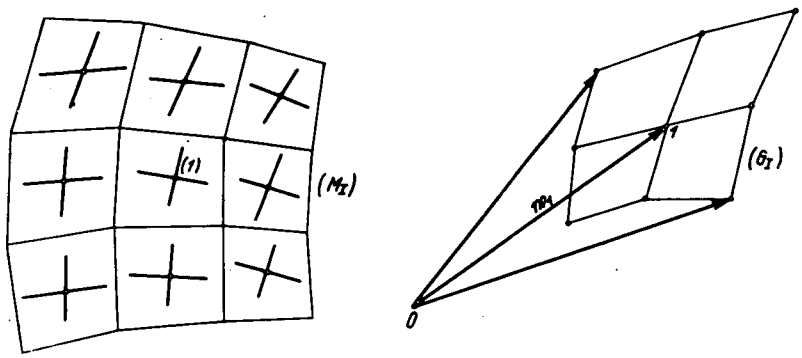

Figure 10. Explanation of the construction of the second approximation of Mach's net.

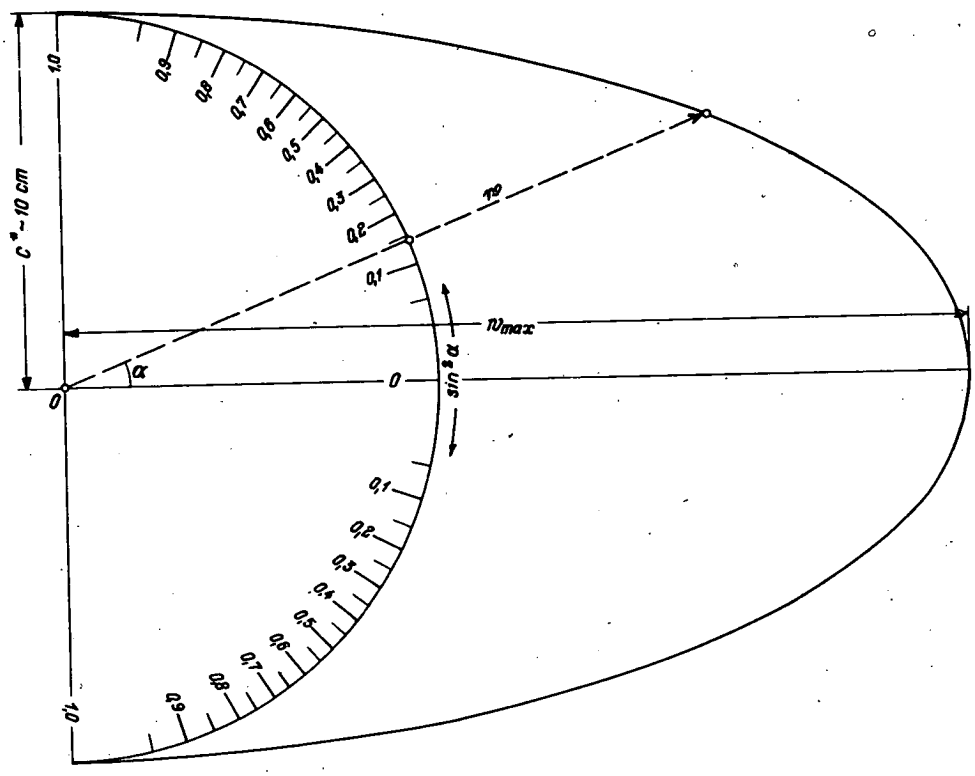

Figure 11. Monogram for α and $\sin^2\alpha$ as a function of MD.

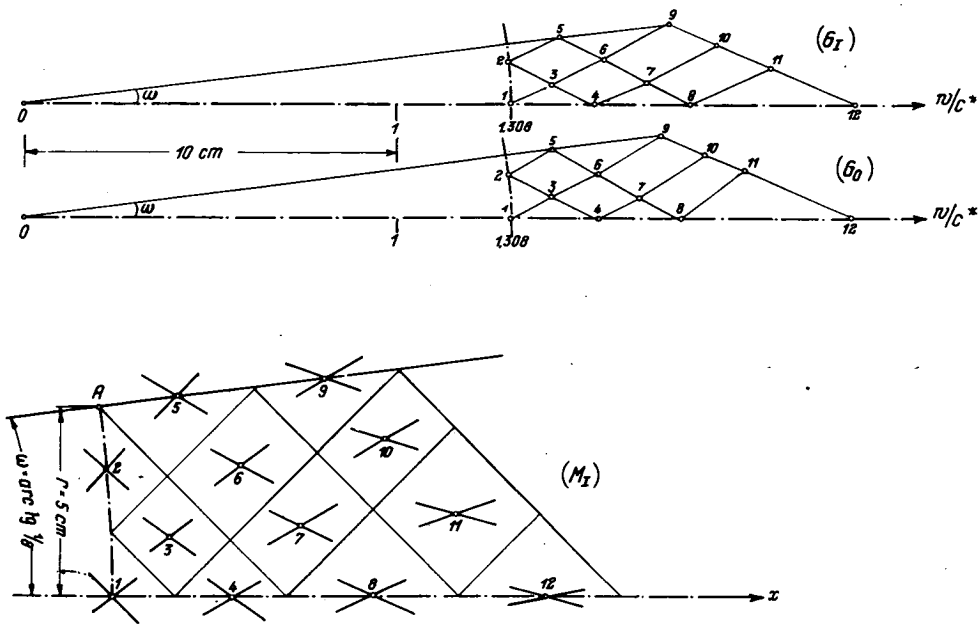

Figure 12. First approximation for source flow in conical nozzle.

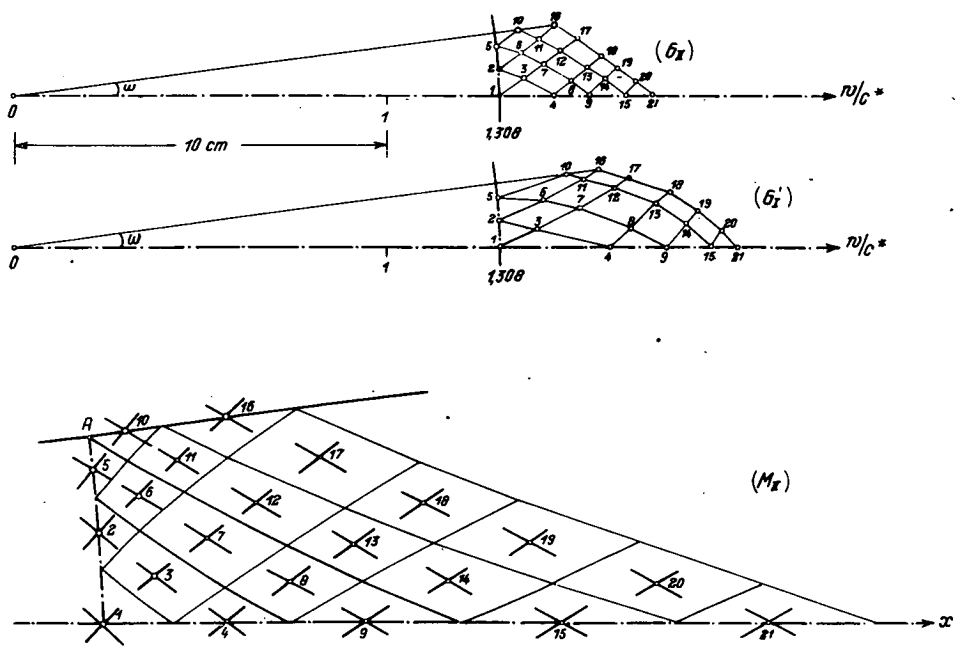

Figure 13. Second approximation for source flow in conical nozzle.

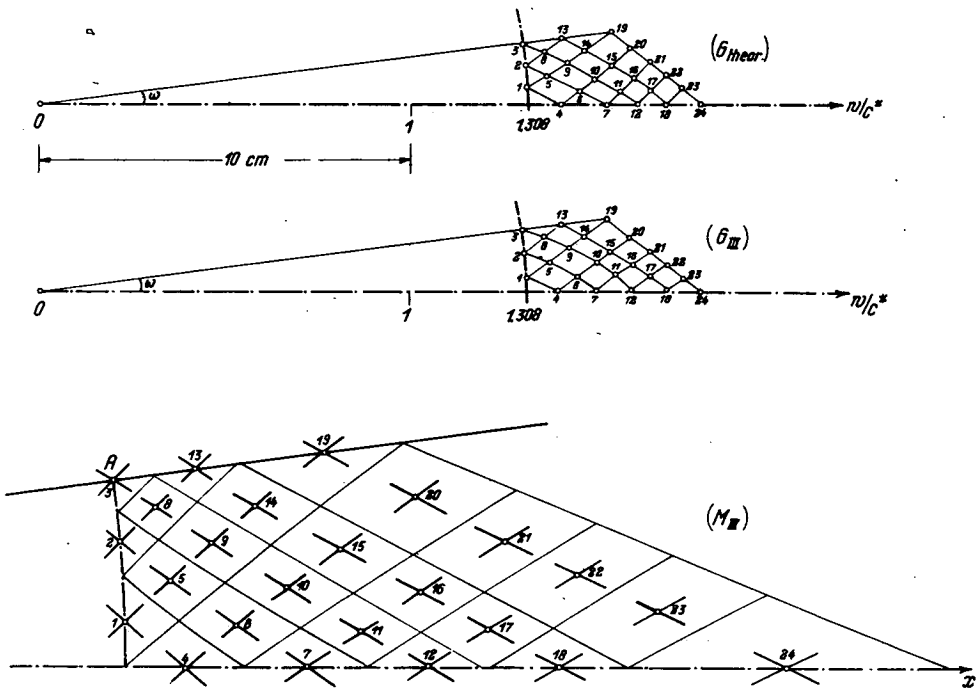

Figure 14. Third approximation for source flow in conical nozzle.

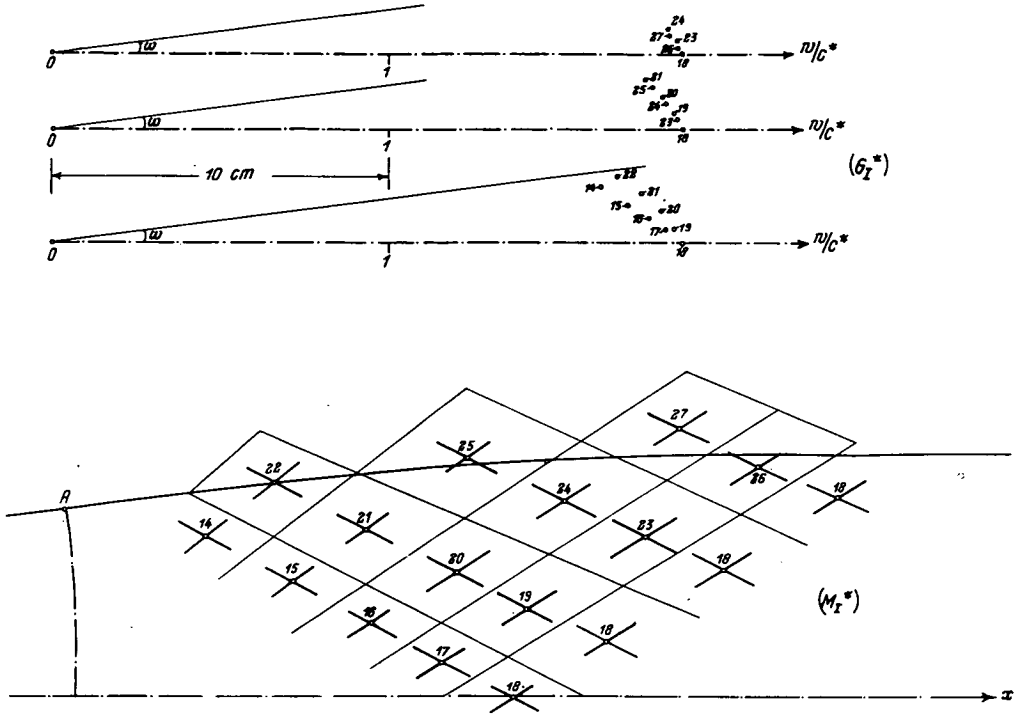

Figure 15. First approximation for correction of the conical nozzle for parallel outflow.

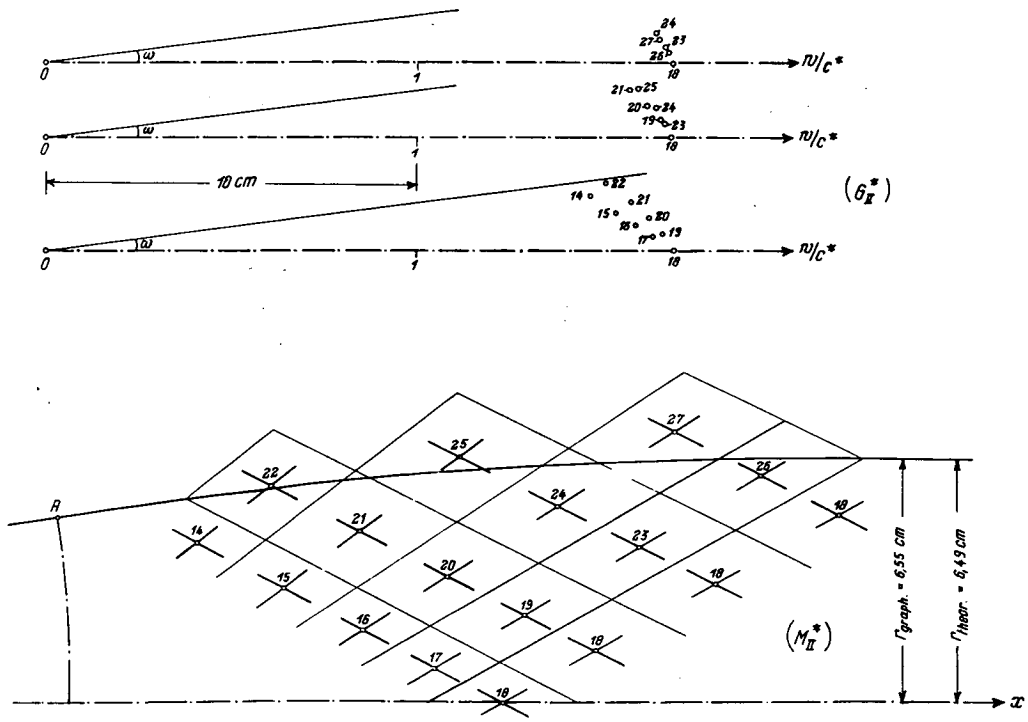

Figure 16. Second approximation for correction of the conical nozzle for parallel outflow.

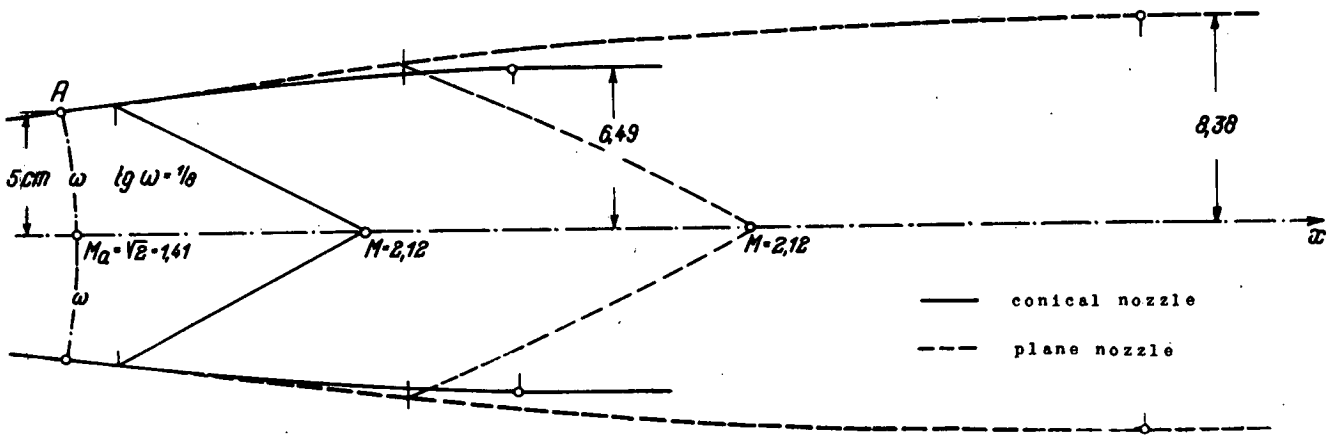

Figure 17. The conical nozzle, corrected for parallel outflow, contrasted with the corresponding plane nozzle.