FILE COPY
NO 2

NATIONAL ADVISORY COMMITTEE FOR AERONAUTICS

REPORT No. 330

EXPERIMENTAL AND ANALYTICAL DETERMINATION OF THE MOTION OF HYDRAULICALLY OPERATED VALVE STEMS IN OIL ENGINE INJECTION SYSTEMS

By A. G. GELALLES and A. M. ROTHROCK

THIS DOCUMENT ON LOAN FROM THE FILES OF

NATIONAL ADVISORY COMMITTEE FOR AERONAUTICS
LANGLEY AERONAUTICAL LABORATORY
LANGLEY FIELD, HAMPTON, VIRGINIA

RETURN TO THE ABOVE ADDRESS.

REQUESTS FOR PUBLICATIONS SHOULD BE ADDRESSED AS FOLLOWS:

NATIONAL ADVISORY COMMITTEE FOR AERONAUTICS
1512 H STREET, N. W.
WASHINGTON 25, D. C.

For sale by the Superintendent of Documents, Washington, D. C. - - Price 10 cents

AERONAUTICAL SYMBOLS

1. FUNDAMENTAL AND DERIVED UNITS

	Symbol	Metric		English	
		Unit	Symbol	Unit	Symbol
Length	l	meter	m	foot (or mile)	ft. (or mi.)
Time	t	second	s	second (or hour)	sec. (or hr.)
Force	F	weight of one kilogram	kg	weight of one pound	lb.
Power	P	kg/m/s		horsepower	hp
Speed		km/hr	k. p. h.	mi./hr.	m. p. h.
		m/s	m. p. s.	ft./sec.	f. p. s.

2. GENERAL SYMBOLS, ETC.

W, Weight, $=mg$

g, Standard acceleration of gravity $=9.80665$ m/s$^2=32.1740$ ft./sec.^{2}

m, Mass, $=\frac{W}{g}$

ρ, Density (mass per unit volume).

Standard density of dry air, 0.12497 (kg-m^{-4} s^2) at 15° C and 760 mm $=0.002378$ (lb.-ft.$^{-4}$ sec.^{2}).

Specific weight of "standard" air, 1.2255 kg/m$^3=0.07651$ lb./ft.^{3}

mk^2, Moment of inertia (indicate axis of the radius of gyration, k, by proper subscript).

S, Area.

S_w, Wing area, etc.

G, Gap.

b, Span.

c, Chord length.

b/c, Aspect ratio.

f, Distance from C. G. to elevator hinge.

μ, Coefficient of viscosity.

3. AERODYNAMICAL SYMBOLS

V, True air speed.

q, Dynamic (or impact) pressure $=\frac{1}{2}\rho V^2$

L, Lift, absolute coefficient $C_L=\frac{L}{qS}$

D, Drag, absolute coefficient $C_D=\frac{D}{qS}$

C, Cross-wind force, absolute coefficient $C_C=\frac{C}{qS}$

R, Resultant force. (Note that these coefficients are twice as large as the old coefficients L_C, D_C.)

i_w, Angle of setting of wings (relative to thrust line).

i_t, Angle of stabilizer setting with reference to thrust line.

γ, Dihedral angle.

$\rho\frac{Vl}{\mu}$, Reynolds Number, where l is a linear dimension.

e. g., for a model airfoil 3 in. chord, 100 mi./hr. normal pressure, 0° C: 255,000 and at 15° C., 230,000;

or for a model of 10 cm chord 40 m/s, corresponding numbers are 299,000 and 270,000.

C_p, Center of pressure coefficient (ratio of distance of C. P. from leading edge to chord length).

β, Angle of stabilizer setting with reference to lower wing, $=(i_t-i_w)$.

α, Angle of attack.

ϵ, Angle of downwash.

71616°—29

REPORT No. 330

EXPERIMENTAL AND ANALYTICAL DETERMINATION OF THE MOTION OF HYDRAULICALLY OPERATED VALVE STEMS IN OIL ENGINE INJECTION SYSTEMS

By A. G. GELALLES and A. M. ROTHROCK
Langley Memorial Aeronautical Laboratory

NATIONAL ADVISORY COMMITTEE FOR AERONAUTICS

NAVY BUILDING, WASHINGTON, D. C.

(An independent Government establishment, created by act of Congress approved March 3, 1915, for the supervision and direction of the scientific study of the problems of flight. It consists of 15 members who are appointed by the President, all of whom serve as such without compensation.)

JOSEPH S. AMES, Ph. D., *Chairman.*
President, Johns Hopkins University, Baltimore, Md.
DAVID W. TAYLOR, D. Eng., *Vice Chairman.*
Washington, D. C.
CHARLES G. ABBOT, Sc. D.,
Secretary, Smithsonian Institution, Washington, D. C.
GEORGE K. BURGESS, Sc. D.,
Director, Bureau of Standards, Washington, D. C.
WILLIAM F. DURAND, Ph. D.,
Professor Emeritus of Mechanical Engineering, Stanford University, California.
JAMES E. FECHET, Major General, United States Army,
Chief of Air Corps, War Department, Washington, D. C.
WILLIAM E. GILLMORE, Brigadier General, United States Army,
Chief, Matériel Division, Air Corps, Wright Field, Dayton, Ohio.
HARRY F. GUGGENHEIM, M. A.,
President, The Daniel Guggenheim Fund for the Promotion of Aeronautics, Inc., New York City.
EMORY S. LAND, Captain, United States Navy.
WM. P. MACCRACKEN, Jr., Ph. B.,
Assistant Secretary of Commerce for Aeronautics.
CHARLES F. MARVIN, M. E.,
Chief, United States Weather Bureau, Washington, D. C.
WILLIAM A. MOFFETT, Rear Admiral, United States Navy,
Chief, Bureau of Aeronautics, Navy Department, Washington, D. C.
S. W. STRATTON, Sc. D.,
President Massachusetts Institute of Technology, Cambridge, Mass.
EDWARD P. WARNER, M. S.,
Cambridge, Mass.
ORVILLE WRIGHT, Sc. D.,
Dayton, Ohio.

GEORGE W. LEWIS, *Director of Aeronautical Research.*
JOHN F. VICTORY, *Secretary.*
HENRY J. E. REID, *Engineer in Charge, Langley Memorial Aeronautical Laboratory, Langley Field, Va.*
JOHN J. IDE, *Technical Assistant in Europe, Paris, France.*

EXECUTIVE COMMITTEE

JOSEPH S. AMES, *Chairman.*
DAVID W. TAYLOR, *Vice Chairman.*

CHARLES G. ABBOT.
GEORGE K. BURGESS.
JAMES E. FECHET.
WILLIAM E. GILLMORE.
EMORY S. LAND.
CHARLES F. MARVIN.
WILLIAM A. MOFFETT.
S. W. STRATTON.
ORVILLE WRIGHT.

JOHN F. VICTORY, *Secretary.*

REPORT No. 330

EXPERIMENTAL AND ANALYTICAL DETERMINATION OF THE MOTION OF HYDRAULICALLY OPERATED VALVE STEMS IN OIL ENGINE INJECTION SYSTEMS

By A. G. Gelalles and A. M. Rothrock

SUMMARY

This research on the pressure variations in the injection system of the N. A. C. A. Spray Photography Equipment and on the effects of these variations on the motion of the timing valve stem was undertaken in connection with the study of fuel injection systems for high-speed oil engines. The Spray Photography Equipment employed for these tests consists of a fuel injection system for producing an oil spray, an electrical spark system for illuminating the spray, and a photographic camera for recording its development. The fuel injection system contains a high-pressure hand pump for producing the injection pressures, an oil reservoir for maintaining the pressures of the fuel during the injection, a timing valve for timing the start of the oil spray, an injection valve for atomizing the oil, and a by-pass valve for controlling the cut-off of the spray. Additions were made to the apparatus in order to record the motion of the timing valve stem photographically.

The timing valve stem was held against its seat by a helical spring so adjusted that the total hydraulic force on the stem actuated it immediately after it had been mechanically lifted from its seat. The lift of the stem was recorded photographically to determine the effects of injection tubes 7 inches and 43 inches long. The pressure variations at the seat and in the injection valve tubes were analyzed and the lifts of the stem for both tubes computed from the analysis and compared with the experimental records.

The calculations indicate that the hydraulic pressure at the timing valve seat was rising at a rate of 350,000,000 pounds per square inch per second when the timing valve stem had been lifted 0.004 inch, and that the hydraulic pressure throughout the tube did not approximate that of the oil in the reservoir until 0.0028 second after the timing valve started to open with the 43-inch tube and 0.0003 second with the 7-inch tube. The calculations and experiments indicate that after the by-pass valve started to open the hydraulic pressure in the tube dropped to the closing pressure of the timing valve in 0.0015 second with the 43-inch tube and in 0.0004 second with the 7-inch tube. The photographic records of the stem motion show that the stem reached the maximum lift approximately 0.001 second later with the 43-inch tube than with the 7-inch tube, and that the valve stem seated 0.0005 second later with the 43-inch tube than with the 7-inch tube.

The general equation for the motion of the stem of a spring-loaded valve when the motion is controlled by hydraulic pressure is

$$f = \lambda s + m \frac{d^2 s}{d t^2}$$

where f = *hydraulic force on the stem at any time t seconds after the start of motion plus or minus the friction of the stem in its guide,*

λ = *scale of spring,*

s = *compression of the spring at any time t seconds after the start of motion,*

m = *mass of moving parts.*

The methods of analysis of the pressure variations and the general equation for the motion of the spring-loaded stem for the timing valve are applicable to a spring-loaded automatic injection valve, and in general to all hydraulically operated valves. A sample calculation for a spring-loaded automatic injection valve is included.

INTRODUCTION

The design of an efficient, smooth-running, high-speed oil engine requires careful study of the operation of its fuel injection system. Of the two types of injection systems generally used—air injection and hydraulic pressure injection—the hydraulic pressure system is particularly adaptable to the high-speed oil engine. There are two types of hydraulic pressure injection systems, one using a mechanically operated injection valve, and the other a hydraulically operated or automatic injection valve. Most fuel injection systems using automatic injection valves are fitted with an injection tube a foot or more in length between the injection valve and the fuel pump. The oil in this tube, with few exceptions, is subjected to high pressures only during the injection period. The instantaneous pressures at the injection valve are not the same as those in the fuel pump because of the compressibility of the oil within the injection tube, the elasticity of the injection tube walls, and the inertia of the oil.

The form and penetration of a fuel spray from an injection valve depend largely on the hydraulic pressure variations in the injection valve during the injection period. The pressures under which the injection valve operates are affected to a large extent by the compressibility of the oil within the injection tube, the elasticity of the tube walls, and such pressure waves as may occur in the injection system. These pressure variations can be approximately determined by analyzing the effects of injection tube length and bore, residual pressure in the injection tube, injection pressure, and different rates of pump displacement. No experimental or theoretical data, so far as is known, have been published on these variations of pressure during the period of injection.

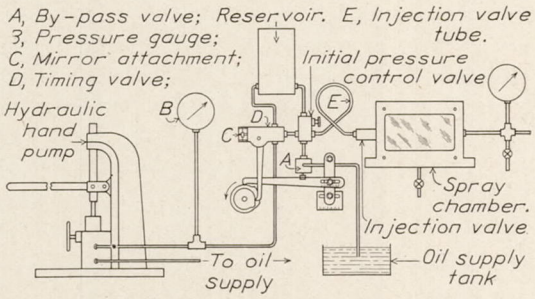

FIGURE 1.—Diagrammatic arrangement of apparatus for production and control of spray

Investigations have been started at the Langley Memorial Aeronautical Laboratory at Langley Field, Va., for the purpose of studying these pressure variations in the injection system of the N. A. C. A. Spray Photography Equipment. (Reference 1.) This injection system consists of an oil reservoir into which the fuel oil is pumped under hydraulic pressures up to 8,000 pounds per square inch, a timing valve to release the oil under pressure from the reservoir to the injection valve, an injection-valve tube connecting the timing valve to the injection valve, and the injection valve from which the oil is sprayed into the spray chamber.

This report covers an investigation of the pressure variations in this injection system in which the motion of the timing valve was determined experimentally when its lift was controlled by the hydraulic pressure of the oil in the reservoir. The purpose of this investigation was, first, to determine how closely the actual motion of the timing-valve stem approached the motion of the stem as it was computed from an analysis of the pressure causing the stem to lift, and, second, to determine the effect of the length of the injection-valve tube on the pressure variations at the timing valve. The timing-valve stem was held against its seat by a helical spring so adjusted that the stem was actuated by the oil pressure after it had been lifted approximately 0.001 inch from the seat by a cam-operated rocker arm. Thus the operation of the timing valve under this spring load was similar to that of a spring-loaded automatic injection valve.

APPARATUS AND METHODS

The N. A. C. A. Spray Photography Equipment (reference 1) consists of a fuel-injection system for producing the oil spray, an electrical-spark system for illuminating the spray, and a photographic camera for recording its development. The fuel injection system (fig. 1) contains a high-pressure hydarulic hand pump for producing the injection pressures, an oil reservoir for maintaining the pressure during injection, a timing valve for timing the start of injection, an injection valve for atomizing the oil, and a by-pass valve for controlling the cut-off of the injection.

The timing valve (fig. 2) is a spring-loaded needle valve operated by a cam and a rocker arm. One half of a clutch similar to the type used in punch presses is rigidly attached to a shaft that is driven by an electric motor at 950 r. p. m. The other half of the clutch is mounted on the cam shaft and engages the first half when a trip lever is struck. The two halves of the clutch remain engaged for one revolution of the cam shaft causing a complete cycle of the operation of the injection system to take place.

Additional apparatus was installed (fig. 3) in order to record the motion of the timing valve stem photographically. A pivoted mirror was connected to the outer end of the timing valve stem by a lever arm. A beam of light from a point source was focused on this mirror by a lens and was reflected onto a photographic film mounted on a drum which was rotated by an electric motor at a speed of 3,400 r. p. m. Any motion of the stem changed the angle of the mirror and the position of the reflected beam of light on the film. The motion of the stem during the operation of the valve was thus recorded on the film as a continuous line.

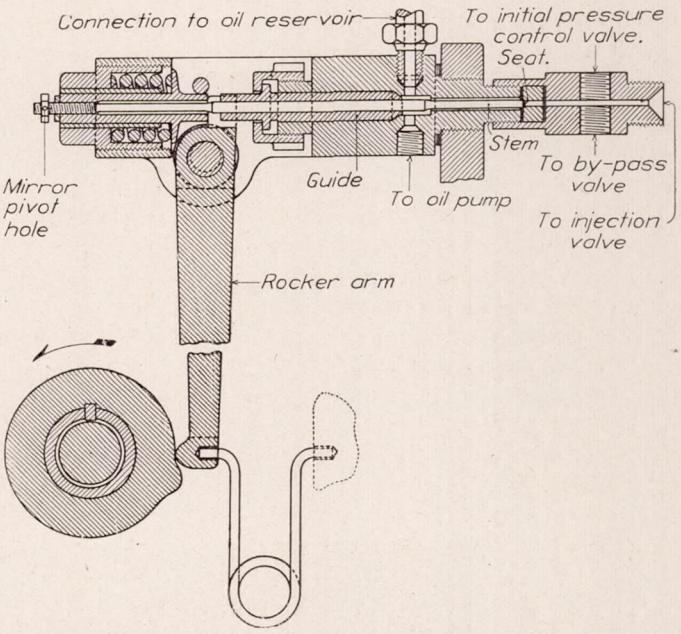

FIGURE 2.—Timing valve mechanism

It was desired in this research to investigate the pressure variations at the timing-valve seat and in the injection tube as well as the motion of the timing valve stem. Consequently, the spring force on the stem was adjusted so that it was less than the hydraulic force on the stem when the valve was opened, but still held the stem against the seat with sufficient force to prevent leakage of the fuel when the valve was closed. The hydraulic force on the stem from the injection pressure used in these tests was 153 pounds when the valve was opened and 67 pounds when the valve was closed. A spring force of 132 pounds was found sufficient to prevent leakage. Under these conditions the hydraulic force actuated the stem after the cam had lifted it sufficiently to permit the oil pressure to build up around the seat and end of the stem. The rocker arm (fig. 2) was adjusted with a clearance of 0.001 inch between it and the spring follower when the valve was closed so that the entire spring force acted upon the seat.

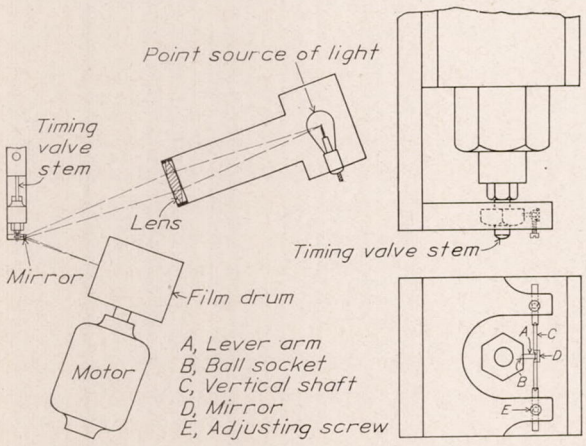

FIGURE 3.—Apparatus for recording the motion of the timing valve stem. Enlarged views of end of timing valve, showing mirror attachment on end of stem, given at right of figure

The test procedure was similar to that used in the tests on injection valves with this apparatus. (Reference 1.) The pressure was raised by means of the hydraulic hand pump to 1,000 pounds per square inch in the injection valve tube and to 8,000 pounds per square inch in the oil reservoir. The rotating half of the clutch and the film drum were brought to the test speeds. The beam of light was focused on the mirror. The clutch trip lever was struck, the clutch engaged, and the cam shaft made one revolution. Oil passed through the opening between the stem and the

nozzle seat of the timing valve as the rocker arm lifted the stem and the oil pressure built up around the seat and end of the stem. As soon as the hydraulic force exceeded the spring force, the stem lifted at a faster rate than that produced by the cam. The oil passed through the timing valve into the injection valve tube, forced the injection valve open and sprayed into the spray chamber. A second cam opened the by-pass valve 0.0043 second after the timing valve stem was put in motion, the pressure dropped in the injection tube, and the injection valve closed.

A record was taken of the motion of the timing valve stem as produced by the cam alone with no oil in the system, so that the start of the motion produced by the hydraulic pressure might be obtained. The force acting on the rocker arm at the start of the motion was increased 67 pounds when no hydraulic pressure was used in the system. The effect of the rocker arm deflection on the lift of the stem due to this difference of force was found by both computations and experiment to be 0.0006 inch. Corrections were made for the rocker arm deflection in order to compare this record with those produced by the hydraulic pressure.

EXPERIMENTAL RESULTS

A photographic record of the motion of the timing valve stem with the 7-inch injection tube is shown in Figure 4. The time is recorded horizontally and the lift vertically. The horizontal line represents zero lift. The velocity with which the stem was lifted is seen to have increased during the first part of the opening of the valve and then to have remained practically constant until the maximum lift was reached. This maximum lift, due to the inertia of the

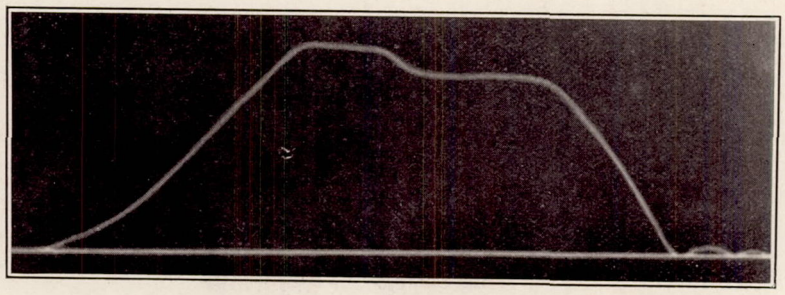

FIGURE 4.—Record of the timing valve stem motion. Tube length 7 inches. Injection pressure 8,000 lb./sq. in. Initial injection tube pressure 1,000 lb./sq. in.

moving parts of the valve, was greater than the lift at which the restoring force of the spring was in equilibrium with the hydraulic force. The resulting harmonic motion produced by this effect was damped out by the reversal of the friction of the stem in its guide and by the inertia of the oil. The stem then remained in the position at which the spring force, hydraulic force, and friction were in equilibrium. This part of the curve has a slight downward slope because of the discharge of the oil from the reservoir. The pressure in the system was released after an interval of 0.0043 second by the opening of the by-pass valve. As the pressure across the timing valve seat dropped the stem was forced back by the valve spring to the closed position. The rate of closing of the valve was controlled by the spring force, the rate of pressure drop, the inertia of the moving parts of the valve, and the friction of the stem in its guide. The stem rebounded after the impact against its seat since the excess of spring force over the hydraulic force at this time was small.

The record shown in Figure 4 is reproduced in curve (a) (fig. 5), with the coordinates of time and lift. Curve (b) (fig. 5) is a reproduction of a photographic record of the stem motion with the 43-inch injection tube. Curve (c) (fig. 5) is a reproduction of a record of the stem motion produced by the cam alone. The variations between curves (a) and (b) are caused by the effects of the injection tube lengths on the volumes of the oil in the tubes and the distance of pressure wave travel, since all other test conditions were maintained constant. The difference between the rates of opening of the valve for the two injection tubes indicates that with the shorter tube and smaller oil volume the pressure at the timing valve seat and across the end of the timing valve stem increased faster than with the longer tube. The maximum lift is greater

with the 7-inch tube because of the higher velocity of the stem as indicated in Figure 5. The rate of closing of the timing valve is approximately the same for both tubes. However, with the 7-inch tube the valve closed about 0.0005 second earlier than with the 43-inch injection tube, although the by-pass valve opened at the same time for both tubes. The curves show that the velocities with which the stem came in contact with the seat, points A and A′, were comparatively high and that the valve stem rebounded from the seat.

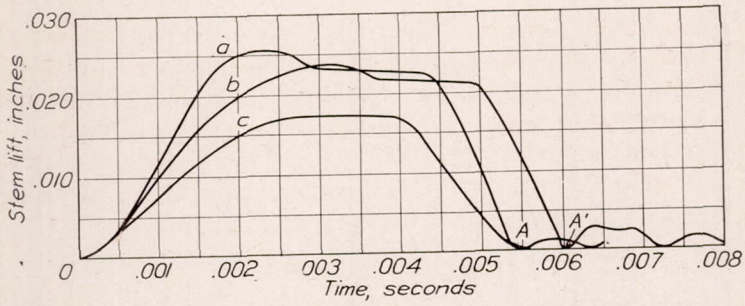

FIGURE 5.—Effect of injection valve tube length on the lift of the timing valve stem. Injection pressure, 8,000 lb./sq. in. Initial pressure in the injection valve tube, 1,000 lb./sq. in. Curve a—tube length 7 inches, inside diameter ⅛ inch; curve b—tube length 43 inches, inside diameter ⅛ inch; curve c—stem motion imparted by the cam

The experimental records do not give exact measures of the pressures existing at the timing valve seat and end of the stem while the stem was in motion because of the friction and inertia of the moving parts. They do, however, give a direct comparison between the different test conditions. The straight-line portion of each curve is a measure of the maximum pressure and the friction, since the maximum pressure at the valve seat was maintained for a short time.

ANALYSIS OF PRESSURE VARIATIONS—COMPUTATIONS OF THE VALVE-STEM MOTION

A mathematical analysis can be made of the pressure variations in the timing valve and in the injection valve tube from which the motion of the timing valve stem for given test conditions can be approximately computed. The motion of the stem may be divided into two parts—first, the motion imparted by the cam, and, second, the motion imparted by the hydraulic pressure. The motion is imparted by the cam until the hydraulic force exceeds the spring force by an amount sufficient to give the stem a faster rate of lift than that given by the cam. The time required for the hydraulic force to reach this value can be computed from the test conditions and from a consideration of the flow of a liquid between two parallel planes moving away from each other. These computations will be greatly simplified if it be considered that the seat and the end of the stem are extended to form complete cones, that the oil in the injection tube does not affect the rate of pressure rise between the seat and stem, and that the pressure rises across the end of the stem at the same rate as at the smallest circumference of the seat. The hydraulic pressure p at any point on the conical surface of the seat at a distance l from the apex of the cone, under these conditions, is given by the equation

$$p = P - \frac{3\ \mu\ V\ (l_2^2 - l^2)}{h^3 \cos^2 \alpha} \qquad \text{(A)}$$

where P = pressure at the larger circumference of the seat,
μ = viscosity of the fuel oil,
V = velocity at which the stem is lifted from its seat,
h = stem lift or opening measured parallel to the stem axis,
α = angle the conical surfaces of the seat make with a plane perpendicular to the stem axis, and
l_2 = distance from apex of cone to its base measured along the conical surface.

Consider the flow of a liquid between two fixed parallel planes, separated by a distance h (fig. 6), with the pressure gradient extending in the directions X and Y. The flow per unit

width in the directions X and Y, respectively, when h is small, is given by equations (1) and (2) (reference 1),

$$U=\frac{h^3}{12\mu}\frac{\partial p}{\partial x} \tag{1}$$

$$T=\frac{h^3}{12\mu}\frac{\partial p}{\partial y} \tag{2}$$

in which U and T are the respective rates of flow, μ the viscosity of the fluid, and p the unit pressure. At the timing valve seats (fig. 7) there are two conical surfaces moving away from each other. Consequently, there is an excess of inflow over outflow to supply the increase of volume between the surfaces. The pressure p between the seat and stem for any lift of the stem h varies from a maximum at r_2 to a minimum at the apex of the cone formed by extending the seat. Consider a differential volume (fig. 7) extending between the seat and stem and contained between two planes normal to the conical surfaces at distances l and $l+\delta l$ from the apex of the cone, and between two planes that intersect along the axis of the stem making a small angle $\delta\theta$ radians on the surfaces. When the stem moves from the seat at a velocity V_1, measured normal

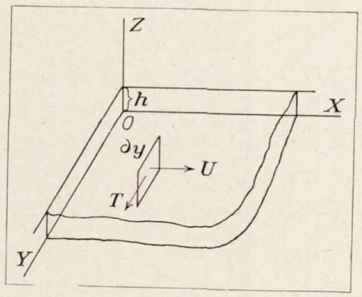

FIGURE 6

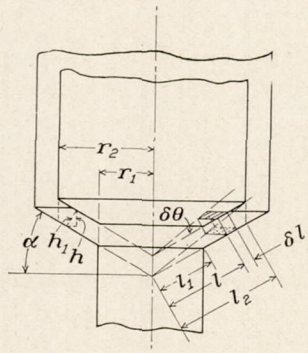

FIGURE 7.—Timing valve seat

to the seat, the rate of increase of volume is $V_1\delta l l\delta\theta$. This rate of increase in volume is also equal to the rate of increase in inflow. Equating the rate of increase of volume to the rate of increase of inflow obtained from equation (1),

$$V_1\delta l l\delta\theta=\frac{\partial}{\partial l}\left[\frac{h_1^3}{12\mu}\frac{\partial p}{\partial l}\,l\delta\theta\right]\delta l \tag{3}$$

This reduces to

$$\frac{12\,V_1 l\mu}{h_1^3}=\frac{\partial}{\partial l}\left[l\frac{\partial p}{\partial l}\right] \tag{3a}$$

Integrating (3a),

$$\frac{6\,V_1 l^2\mu}{h_1^3}=l\frac{\partial p}{\partial l}+C_1 \tag{4}$$

when $l=0$, $\frac{\partial p}{\partial l}=0$. Substituting these values in equation (4) it is found that

$$C_1=O,$$

so that equation (4) becomes

$$\frac{\partial p}{\partial l}=\frac{6\mu V_1}{h_1^3} \tag{4a}$$

Integrating again,

$$p=\frac{3\mu V_1 l^2}{h_1^3}+C_2 \tag{5}$$

when $l=l_2$, $p=P$. Substituting

$$C_2=P-\frac{3\mu V_1 l_2^2}{h_1^3}$$

and

$$p=P-\frac{3\mu V_1}{h_1^3}(l_2^2-l^2) \tag{5a}$$

If V is the rate at which the stem is lifted from the seat, measured parallel to the stem axis, then

$$V_1 = V \cos \alpha,$$

and from Figure 7,

$$h_1 = h \cos \alpha.$$

Equation (5a) then becomes

$$p = P - \frac{3\mu V}{h^3 \cos^2 \alpha} (l_2^2 - l^2). \qquad \text{(5b), (A)}$$

The pressure p_1 at r_1 for any lift h is

$$p = P - \frac{3\mu V}{h^3 \cos^2 \alpha} (l_2^2 - l_1^2). \qquad \text{(5c)}$$

For the timing valve stem α is 30°, l_1 is 0.054 inch, l_2 is 0.072 inch, and the pressure P at r_2 is the injection pressure of 8,000 pounds per square inch. Experiments in this laboratory showed that at atmospheric pressure and 60° F., the viscosity of the Diesel oil used was 45 Saybolt seconds, corresponding to 0.000106 pound-second per square foot. (Reference 3.) The viscosities of oils of similar properties to the Diesel oil employed in this investigation (reference 4) are, for the average pressure of these calculations, between three and four times their viscosities at atmospheric pressure and temperature. The value of three times the viscosity of the Diesel oil at 60° F. and atmospheric pressure was used for μ. Substituting these values in (5c),

$$p_1 = 1{,}152{,}000 - 0.00127 \frac{V}{h^3} \frac{(0.072)^2 - (0.054)^2}{144} \qquad (6)$$

where p_1 is in pounds per square foot, V in feet per second, and h in feet.

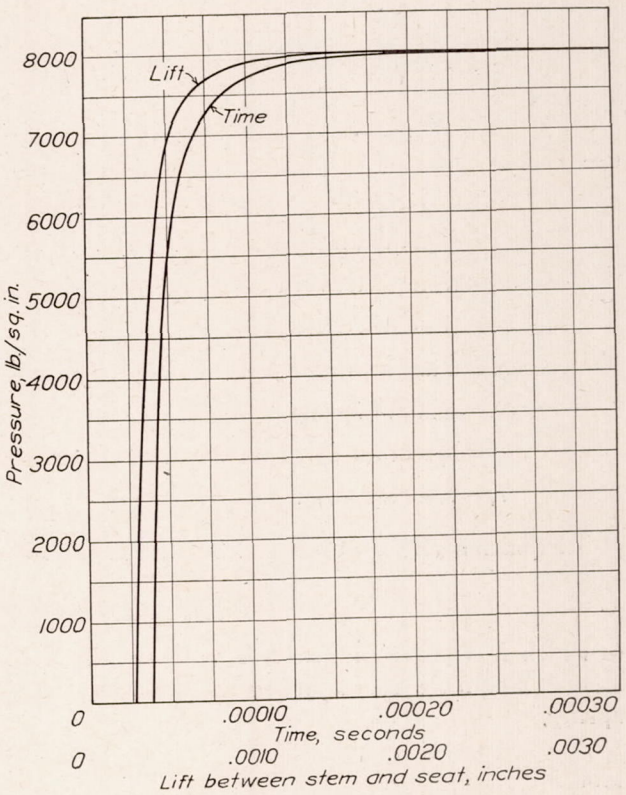

FIGURE 8.—Pressure variation at seat

The values of V and h are obtained for any instant from an enlargement of a record of the cam-imparted motion of the stem. The spring end of the stem, because of the compression of the stem by the spring, was lifted 0.00157 inch before there was any actual opening between the seat and stem. The time required for this lift was 0.00028 second. Consequently, the exact values of V and h for the tip end of the stem at the start of its lift could not be determined. It was assumed, however, that these values were the same as those of the spring end of the stem when V and h, as taken from the motion of the spring end of the stem, gave p greater than zero.

The pressure rise at l_1 as the stem lifted from the seat, obtained from equation (6), is plotted in Figure 8. The curve shows that the pressure at the smallest circumference of the stem was 97.5 per cent of the reservoir pressure 0.00011 second after the stem left the seat. The corresponding lift between the seat and stem was 0.00085 inch.

The viscosity of the fluid has been treated as a constant in the derivation of equation (5c); actually the viscosity varies with the pressure. (Reference 5.) Since equation (5c) is intended to give only the order of magnitude of the pressure variations and since the value chosen for the viscosity of the Diesel oil may be in error by as much as 100 per cent, it is believed that the further complications introduced by considering μ as a function of p are not justified.

The hydraulic force on the stem was of sufficient magnitude 0.00011 second after the stem was lifted from the seat to lift the stem at a faster rate than that caused by the cam. The conditions under which the stem was actuated at this time were:

Hydraulic force on stem = 153 pounds.

Spring force on stem, 132 pounds + (0.00085 inch + 0.0157 inch) 1,000 pounds per inch = 135 pounds.

Friction between stem and guide (obtained with spring balance with no pressure in valve) = 5 pounds.

Weight of moving parts = 0.130 pound.

Velocity of stem = 8.4 inches per second.

Lift of spring end of stem, 0.00085 inch + 0.00157 inch = 0.0024 inch.

Time spring end of stem had been in motion (0.00011 second + 0.00028 second) = 0.00039 second.

Spring scale: Compression (by test) = 1,150 pounds per inch; expansion (by test) = 1,125 pounds per inch.

Compression of spring, 0.115 inch + 0.00085 inch + 0.00157 inch = 0.1174 inch.

The equation for the motion of the stem when actuated by the hydraulic force is

$$t = t_1 + \sqrt{\frac{m}{\lambda}} \sin^{-1} \frac{(\lambda s - f)}{k} - \sin^{-1} \frac{(\lambda s_1 - f)}{k} \tag{B}$$

in which

$$k = \sqrt{f^2 + \lambda\,(m v_1^2 - 2 f s_1 + \lambda s_1^2)}$$

where

s_1 = compression of spring at beginning of oil imparted motion,

s = any distance spring is compressed greater than s_1,

t_1 = time of travel to s_1,

t = time of travel to s,

m = mass of moving parts,

λ = scale of spring,

f = hydraulic force on the stem minus friction of the stem in its guide, and

v_1 = velocity at s_1.

Equation (B) is obtained from the general relation between force, mass, and acceleration,

$$F = m\alpha \tag{7}$$

in which F is the resultant force acting at the stem at the time t, and α is the acceleration of the stem. The force F is equal to the difference between the force f and the restoring force of the spring,

$$m\alpha = f - \lambda s, \tag{7a}$$

and

$$\alpha = \frac{f - \lambda s}{m} \tag{7b}$$

Since

$$\alpha = \frac{dv}{dt}, \text{ and } v = \frac{ds}{dt},$$

$$v\,dv = \alpha\,ds \tag{8}$$

in which v is the velocity at s.
Substituting (7b) in (8)

$$v\,dv = \frac{f - \lambda s}{m}\,ds \tag{8a}$$

Integrating between the limits of v and v_1

$$\frac{v^2 - v_1^2}{2} = \frac{f}{m}(s - s_1) - \frac{(s^2 - s_1^2)}{2}\,\frac{\lambda}{m} \tag{9}$$

Solving (9) for v and equating to ds/dt,

$$\frac{ds}{dt}=\sqrt{v_1^2-\frac{2fs_1}{m}+\frac{\lambda s_1^2}{m}+\frac{2fs}{m}-\frac{\lambda s^2}{m}} \tag{9a}$$

Integrating again between the limits of s and s_1,

$$t=t_1+\sqrt{\frac{m}{\lambda}}\left[\sin^{-1}\frac{(\lambda s-f)}{k}-\sin^{-1}\frac{(\lambda s_1-f)}{k}\right] \tag{10), (B}$$

Equation (10) becomes, on substituting numerical values:

$$t=0.00039+\frac{1}{1849}\left[\sin^{-1}(78.6s-10.1)-1.65\pi\right] \tag{10a}$$

where t is in seconds and s in inches. Equation (10a) represents the time of motion of the timing valve stem in terms of compression of the spring. The lift of the stem S, is at all times 0.115 in. less than the compression of the spring. Solving for S,

$$S=0.0135+0.0127\sin(4.46+1849t) \tag{11}$$

The curve for the variation of stem lift with time from equation (11) is plotted in Figure 9, curve e, and Figure 10, curve f, for the 43-inch and 7-inch tubes, respectively. The curves show that the stem reached its maximum lift of 0.026 inch after the stem had been in motion 0.0018 second. The stem traveled to a higher maximum lift than would have been obtained from the hydraulic force alone, because of the inertia of the moving parts. The stem then returned to the position at which the hydraulic force plus the friction of the stem in its guide were in equilibrium with the spring force. The static pressure in the oil reservoir and consequently the hydraulic force on the valve stem was continually reduced by the flow of oil through the timing valve. This flow supplied the oil for the compression of the oil in the injection valve tube, for the expansion of the tube walls, and for the discharge through the injection valve.

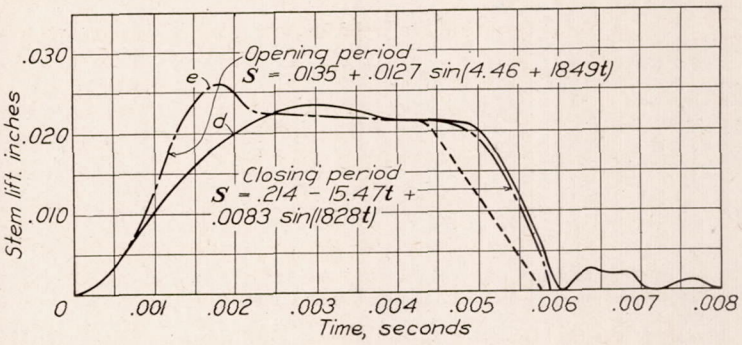

FIGURE 9.—Computed and actual motion of the timing valve stem with the 43-inch tube. Initial spring compression, 130 pounds. Injection pressure, 8,000 lb./sq. in. Initial pressure in the injection valve tube, 1,000 lb./sq. in. Curve e—computed motion; curve d—actual motion

Computations for the 43-inch injection tube (appendix) show that the compression of the oil in the tube was completed in 0.0032 second and that the pressure in the oil reservoir was 7,830 pounds per square inch at that time. The forces on the stem with this pressure were in equilibrium at a lift of 0.022 inch. Consequently, the computed curves passed through the point whose coordinates were 0.0032 second and 0.022 inch. The discharge of oil through the injection valve for both tubes caused a drop of static pressure which gave the computed curves a downward slope of 0.0005 inch for each 0.001 second. Therefore, a line was drawn for the 43-inch tube (fig. 9) through the point (0.0032 second, 0.022 inch) with this slope and extended upward to the left until it intersected the curve from equation (11), and downward to the right until it intersected the abscissa 0.0043 second, at which time the by-pass valve was opened.

Similar computations for the 7-inch injection tube show that the compression of the oil column was completed in 0.0006 second and that the pressure in the oil reservoir when the maximum lift was reached was 7,940 pounds per square inch. The forces with this pressure were in equilibrium at a lift of 0.024 inch. Consequently a line was drawn starting at the second

intersection of the curve from equation (11) with the ordinate 0.024 inch and extended downward to the right with the same slope as used for the 43-inch injection tube until it intersected the abscissa 0.0043 second.

The oil force on the seat and end of the stem diminished as the oil flowed through the by-pass valve, so that the spring forced the stem back to the seat. The stem motion for the closing of the timing valve can be computed if the rate of pressure drop in the timing valve is known. The approximate rate of pressure drop at the stem was obtained as follows, assuming the static oil pressure throughout the tube was affected instantaneously by the discharge through the by-pass valve:

The motion of the by-pass valve was determined from the cam contour and linkage. An increment of lift was taken and the average pressure difference was determined for this lift by the method used for the opening of the timing valve. The amount of oil passed through the by-pass valve was calculated by the method used in the Appendix for the timing valve. The average pressure in the injection tube was obtained from the amount of oil discharged through the by-pass valve and the amount of oil passed through the timing valve and through the injection valve, the average rate of flow through the injection valve being determined experimentally (Appendix). The procedure was repeated until the computed pressure in the injection tube was reduced sufficiently to permit the closing of the timing and injection valves.

The pressure in the oil reservoir at the end of injection determined by this method was found to be within 1 per cent of the observed pressure in the reservoir at the end of injection. The results of these calculations are represented by the short dashed lines in Figure 9 and Figure 10. These sections of the curves would have represented the travel of the timing valve stem were it not for the inertia of the moving parts and the inertia of the oil to be displaced. They represent the rate of pressure decrease in the tube.

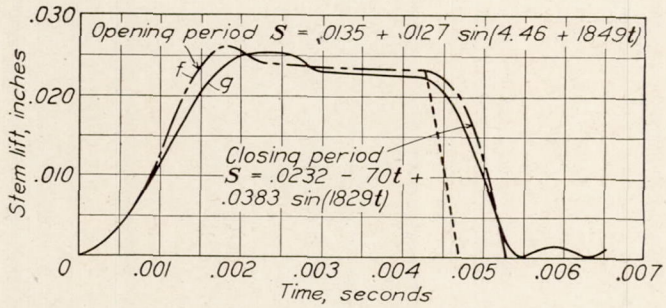

FIGURE 10.—Computed and actual motion of the stem for the 7-inch tube. Initial spring compression, 130 pounds. Injection pressure, 8,000 lb./sq. in. Initial pressure in the injection valve tube, 1,000 lb./sq. in. Curve f—computed motion; curve g—actual motion

The inertia of the oil can be disregarded since it is negligible in comparison with the other forces. The instantaneous lag due to the inertia of the moving parts can be derived from the conditions at the start of the closing motion and the rate at which the pressure dropped at the end of the stem. The forces acting on the stem at the start of the closing motion were the hydraulic force and the friction of the stem in its guide, both tending to hold the stem in the open position, and the spring force tending to move the stem to the closed position. Using the same symbols as before, with the exception that f is now the sum of the hydraulic force and the friction, the equation of the closing motion is

$$f=\lambda s+ma \tag{12}$$

For any instant, f is equal to $C+Kt$, in which C is the hydraulic force at the beginning of pressure drop plus the friction, K is the rate of decrease of hydraulic force, and t the time measured from the beginning of opening of the by-pass valve. Then

$$C+Kt=\lambda s+m\frac{d^2s}{dt^2} \tag{13}$$

The complete integral of (13) is

$$s=A\sin\left(\sqrt{\frac{\lambda}{m}}t\right)+B\cos\left(\sqrt{\frac{\lambda}{m}}t\right)+\frac{C+Kt}{\lambda} \tag{14}$$

when

$$t=0,\ s=\frac{C}{\lambda},\ \text{and}\ \frac{ds}{dt}=0.$$

Then

$$B=0$$

Differentiating equation (14),

$$\frac{ds}{dt}=A\sqrt{\frac{\lambda}{m}}\cos\left(\sqrt{\frac{\lambda}{m}}t\right)+\frac{K}{\lambda}$$

Substituting and solving for A,

$$A=-\frac{K}{\lambda}\sqrt{\frac{m}{\lambda}}$$

Substituting in (14)

$$s=\frac{C}{\lambda}+\frac{Kt}{\lambda}-\frac{K}{\lambda}\sqrt{\frac{m}{\lambda}}\sin\left(\sqrt{\frac{\lambda}{m}}t\right) \qquad (15), (C)$$

Substituting numerical values and solving for S, the equation of the closing motion of the timing valve stem with the 43-inch injection tube is

$$S=0.0214-15.47t+0.0083\sin(1828t) \qquad (16)$$

and with the 7-inch injection tube is

$$S=0.0232-70t+0.0383\sin(1828t) \qquad (17)$$

The curves from these equations are plotted as continuations from the abscissa 0.0043 second of curve (e) (fig. 9), and of curve (f) (fig. 10).

The experimental curves (fig. 5) are reproduced in Figures 9 and 10 for comparison with the computed curves. The curves indicate that the motion imparted by the oil pressure started at the same time for both the experimental and computed curves. The variation between the computed and experimental curves for the opening of the valve indicates that the pressure across the seat and end of the stem increased at a slower rate than was computed. The curves agree closely for the maximum pressures on the stem and for the times and the rates of closing of the valve.

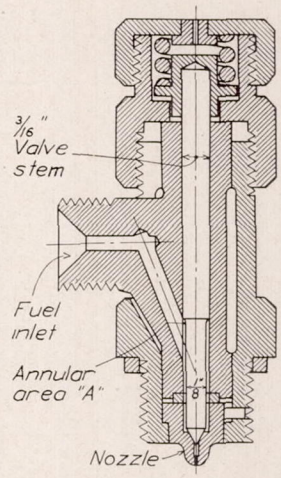

FIGURE 11.—Spring-loaded automatic fuel injection valve

APPLICATION OF THE RESULTS OF ANALYSIS TO AN AUTOMATIC FUEL-INJECTION VALVE

The opening and closing motion of the spring-loaded stem of an automatic fuel-injection valve can be obtained from the foregoing analysis if the variations of the hydraulic force acting on the stem are known. Consider an injection valve (fig. 11) of a fuel-injection system for an oil engine, the pressure in the system being built up directly by a cam-operated fuel pump and released by a by-pass valve. Assume the following operating conditions:

Helical spring force, 40.9 pounds.

Helical spring scale, 1,000 pounds per inch deflection.

Area of A normal to stem axis, 0.0153 square inch.

Area at stem seat normal to stem, 0.0123 square inch.

Friction of stem in its guide, 5 pounds.

Hydraulic opening pressure of injection valve, 3,000 pounds per square inch.

Maximum hydraulic pressure, 8,000 pounds per square inch.

Engine speed, 1,000 R. P. M.

Fuel-injection period at full load on the engine, 36° crank-shaft travel, 0.006 second.

Time for pressure to increase from opening pressure of the injection valve to maximum, 0.006 second.

Rate of pressure rise throughout the injection-tube length during the period of injection, constant (5,000/0.006 pounds per square inch per second), 833,000 pounds per square inch per second.

Weight of moving parts, 0.04 pounds.

Maximum allowable lift of injection-valve stem, 0.015 inch.

The hydraulic opening pressure of 3,000 pounds per square inch in the injection valve, acting on the annular area A, is sufficient to overcome the spring force and the friction force of the stem in its guide. The hydraulic force does not act at the end of the stem until the stem has lifted sufficiently for a pressure to build up between the seat and stem. It was shown in this report, for approximately the same conditions, that the stem rises from the seat about 0.001 inch before the pressure between the seat and stem rises to that in the injection tube. An equation, therefore, is developed which will give this early part of the stem motion to a lift of 0.001 inch. For this motion, only the hydraulic force acting at the annular area A is considered; the increasing hydraulic force at the end of the stem during the interval may be neglected without appreciable error. Equation (15) may be used, since the hydraulic force varies directly with time and the stem starts from rest.

$$s=\frac{C}{\lambda}+\frac{Kt}{\lambda}-\frac{K}{\lambda}\sqrt{\frac{m}{\lambda}}\sin\left(\sqrt{\frac{\lambda}{m}}t\right) \tag{15}$$

When s is in inches, C is in pounds, λ is in pounds per inch, K is in pounds per second, and t is in seconds, m is w/g, where w is the weight of moving parts of the valve in pounds, and g is the gravitational acceleration in inches per second per second. For this valve, C is the

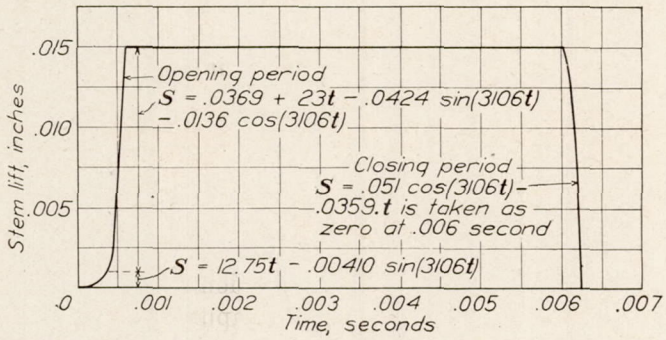

FIGURE 12.—Computed motion of a spring-loaded automatic injection valve stem. Spring scale, 1,000 lb./inch. Weight of moving parts, 0.04 lb. Opening pressure of injection valve, 3,000 lb./sq. in. Maximum pressure in injection tube when by-pass valve opened, 8,000 lb./sq. in. Time for static pressure in injection tube to rise from 5,000 to 8,000 lb./sq. in., 0.006 second. Maximum stem lift allowable, 0.015 inch

hydraulic force on the area A at the beginning of the motion of the stem minus the friction of the stem in its guide,

$$C=0.0153 \text{ square inch}\times 3{,}000 \text{ pounds per square inch}-5 \text{ pounds}=40.9 \text{ pounds},$$

K is the rate at which the hydraulic force acting on the stem is increasing.

$$K=833{,}000 \text{ pounds per square inch per second}\times 0.0153 \text{ square inch}=12{,}750 \text{ pounds per second}$$

Substituting numerical values in equation (15),

$$s=\frac{40.9}{1000}+\frac{12750t}{1000}-\frac{12750}{1000}\sqrt{\frac{0.040}{1000\times 386}}\sin\left(\sqrt{\frac{1000\times 386}{0.040}}t\right) \tag{15a}$$

$$s=0.0409+12.75t-0.00410\sin(3106t), \tag{15b}$$

where s is the compression of the spring in inches. The stem lift S is s minus the initial compression of the spring or $s-0.0409$ inch. Then,

$$S=12.75t-0.00410\sin(3106t) \tag{18}$$

The curve of this equation (fig. 12) shows that the lift of 0.001 inch is reached in 0.00037 second. The increase of pressure in the system for this interval of time is 308 pounds per square inch.

The hydraulic force acting on the stem during the remainder of the motion is that acting at the annular area A and at the end of the stem. Equation (14) is applicable to this part of the motion,

$$s=\frac{C}{\lambda}+\frac{Kt_1}{\lambda}+A\sin\left(\sqrt{\frac{\lambda}{m}}t_1\right)+B\cos\left(\sqrt{\frac{\lambda}{m}}t_1\right) \tag{14}$$

in which t_1 is 0 when $t=0.00037$ second. The hydraulic pressure is now acting on the entire area of the stem.

Therefore,

$C=3{,}308$ pounds per square inch $(0.0153+0.0123)$ square inch -5 pounds $=86.3$ pounds.

$K=833{,}000$ pounds per square inch per second $(0.0153+0.0123)$ square inch $=23{,}000$ pounds per second

The constants of integration in equation (14) are determined from the known initial conditions of this part of the motion. When $t_1=0$, $s=0.042$ inch. Substituting these values in equation (14) and solving for the constant B,

$$0.042=\frac{86.3}{1000}+0+A\sin(0)+B\cos(0)$$

$$B=-0.0443$$

Further, when $t=0$, $\frac{ds}{dt_1}$, the velocity, is that which is obtained by differentiating equation (15b) with respect to t,

$$\frac{ds}{dt}=\frac{d}{dt}[0.0409+12.75t-0.00410\sin(3106t)] \tag{19}$$

$$\frac{ds}{dt}=12.75-0.00410\times3106\cos(3106t) \tag{19a}$$

When $t=0.00037$ second, $\frac{ds}{dt}=7.56$ inches per second $=\frac{ds}{dt_1}$ for $t_1=0$. Differentiating equation (14) to determine the other constant of integration,

$$\frac{ds}{dt_1}=\sqrt{\frac{\lambda}{m}}\times A\cos\left(\sqrt{\frac{\lambda}{m}}t_1\right)-\sqrt{\frac{\lambda}{m}}B\sin\left(\sqrt{\frac{\lambda}{m}}t_1\right)+\frac{K}{\lambda} \tag{20}$$

Substituting numerical values and solving for the constant A, when $t_1=0$,

$$7.56=3106\times A\cos(0)-3106\times0.0443\sin(0)+\frac{23000}{1000} \tag{20a}$$

$$A=-0.00497$$

The equation for this part of the motion becomes,

$$s=0.0863+23t_1-0.00497\sin(3106t_1)-0.0443\cos(3106t_1) \tag{21}$$

$t_1=0$ when $t=0.00037$ second, or $t_1=(t-0.00037)$ second.

Substituting in equation (21),

$$s=0.0863+23(t-0.00037)-0.00497\sin[3106(t-0.00037)]-0.0443\cos[3106(t-0.00037)] \tag{22}$$

$$s=0.0778+23t-0.0424\sin(3106t)-0.0136\cos(3106t) \tag{22a}$$

The stem motion S is $(s-0.0409)$.

$$S=0.0369+23t-0.0424\sin(3106t)-0.0136\cos(3106t) \tag{23}$$

The curve (fig. 12) of this equation shows that the maximum lift of 0.015 inch was reached in 0.0006 second and that the time of opening for this valve is 10 per cent of the injection period at full load on the engine. The bouncing of the stem against the stop is neglected.

The by-pass valves ordinarily employed in the fuel injection systems for oil engines open so rapidly that little error is introduced in the computations for the closing motion of the automatic injection valve stem if it is assumed that the pressure at the valve drops to zero instantaneously. The only force resisting the spring during the closing motion of the stem is the friction of the stem in its guide. Consequently equation (12) represents this part of the motion. The complete integral of equation (12) is

$$s = A \sin\left(\sqrt{\frac{\lambda}{m}}t_2\right) + B \cos\left(\sqrt{\frac{\lambda}{m}}t_2\right) + \frac{f}{\lambda} \tag{24}$$

For convenience in the computations, t_2 is taken as zero at the start of the closing motion. Then, when $t_2 = 0$, $s = 0.056$ inch. Substituting in equation (24),

$$0.056 = A \sin(0) + B \cos(0) + \frac{5}{1000}$$

$$B = 0.051$$

Also, when $t_2 = 0$, $\frac{ds}{dt_2} = 0$. Differentiating equation (24) with respect to t_2,

$$\frac{ds}{dt_2} = \sqrt{\frac{\lambda}{m}}\, A \cos\left(\sqrt{\frac{\lambda}{m}}t_2\right) - \sqrt{\frac{\lambda}{m}}\, B \sin\left(\sqrt{\frac{\lambda}{m}}t_2\right) \tag{25}$$

Substituting numerical values,

$$0 = 3106 \times A \cos(0) - 3106 \times B \sin(0)$$

$$A = 0$$

Substituting in equation (24)

$$s = 0.051 \cos(3106t_2) + 0.005 \tag{26}$$

The equation for the movement of the stem is

$$S = 0.051 \cos(3106t_2) - 0.0359 \tag{27}$$

The curve of equation (27) (fig. 12) shows that the injection valve stem returned to its seat in 0.00025 second. The velocity with which the stem came against its nozzle seat is found by differentiating equation (26) with respect to t_2 and solving for $\frac{ds}{dt_2}$ for $t_2 = 0.00025$ second. The value obtained is 9.3 feet per second.

CONCLUSIONS

Experiment and analysis indicate that during the operation of an injection system employing an automatic injection valve the rate of oil pressure variations in the injection tube and valve differ considerably for different lengths of tubes. For the injection system and the pressure conditions investigated in this work, the analysis, substantiated by experimental results, shows that when a 43-inch injection tube with a one-eighth-inch bore was used the compression of the oil column in the tube was not completed until 0.0028 second after the timing valve started to open, while when a 7-inch injection tube of the same bore was used the time to complete the compression was 0.0003 second. After the opening of the by-pass valve, the pressure in the injection tube was reduced to the closing pressure of the timing valve 0.001 second earlier, and the timing valve closed 0.0005 second earlier with the 7-inch tube than with the 43-inch tube, although the by-pass valve opened at the same time for both tubes.

The results of an analysis based on the flow of a liquid between two parallel planes show that the hydraulic-pressure variation between the seat and stem of a fuel needle valve for very small lifts is given by the equation:

$$p = P - \frac{3\mu V(l_2^2 - l^2)}{h^3 \cos^2 \alpha}$$

where p = hydraulic pressure on the conical surface of the seat for any lift h at distance l from the apex of the cone which is formed by extending the conical surfaces.

P = pressure at the large circumference of the seat.

μ = viscosity of the fuel oil.

V = velocity at which the stem is lifted from its seat.

h = stem lift or opening between the seats, measured along the stem axis.

α = angle the conical surfaces of the seat make with a plane perpendicular to the stem axis.

l_2 = distance from apex of cone to its base, measured along the conical surfaces.

For the conditions of operation of the timing valve employed in these tests the pressure p at the smallest circumference of the timing valve stem reached 97.5 per cent of the pressure P when the stem had lifted approximately 0.001 inch.

The results of an analysis of the forces acting on the timing valve stem when its motion is controlled by the hydraulic force of the fuel oil show that the motion of the stem is given by the equation:

$$f = \lambda s + m \frac{d^2 s}{dt^2}$$

where f = hydraulic force on the stem at any time t seconds after the motion started plus or minus the friction of the stem in its guide.

λ = scale of the spring.

s = distance spring is compressed in t seconds after motion started.

m = mass of moving parts.

Relations for the lift of stem with time may be obtained from this equation for any particular hydraulic pressure variations.

The results of the analysis of the pressure variations and the equations of motion presented in this report for the timing valve are applicable to spring-loaded automatic injection valves, and in general to all hydraulically operated valves.

Langley Memorial Aeronautical Laboratory,
National Advisory Committee for Aeronautics,
Langley Field, Va., *December 26, 1928.*

APPENDIX

COMPUTATIONS OF THE PRESSURE IN THE INJECTION VALVE TUBE AT COMPLETION OF COMPRESSION OF THE OIL IN THE INJECTION TUBE AND OF THE TIME TO COMPLETE THIS COMPRESSION

Before the pressure in the injection tube approximates that of the oil reservoir, sufficient oil flowed through the timing valve for the compression of the oil column in the injection valve tube, the expansion of the tube walls, and the discharge through the injection valve. The compression of the Diesel oil in the 43-inch injection tube was computed to be 0.0132 cubic inch for the increase in pressure of 7,000 pounds per square inch. These computations were based on data given in reference 4. The volume supplied for the expansion of the tube walls was computed to be 0.0006 cubic inch. The volume discharged through the injection valve during the interval of compression was the product of the average rate of discharge and the interval of time the injection valve was opened. The average rate of discharge from this valve under the test conditions was found by experiment to be 1.99 cubic inches per second. Experiments made in this laboratory showed that with the 43-inch tube and the conditions assumed here the injection valve opened 0.0015 second after the timing valve started to open. The volume discharged through the injection valve was $(t-0.0015)$ 1.99 cubic inches, where t is the time required to raise the pressure in the injection tube to the maximum value.

The time t can be obtained from the equation

$$\bar{v}tA = C \tag{1}$$

where $\bar{v}$ = average velocity through the timing valve.

t = time required to raise the pressure in the injection tube to that of the oil reservoir.

A = average area of opening of timing valve, 0.004 square inches for a lift of 0.026 inch.

C = volume discharged through timing valve during completion of compression in the injection valve tube.

$$\bar{v}t0.004 = 0.0132 + 0.0006 + 1.99\ (t-0.0015) \tag{1a}$$

The average velocity of flow is obtained by equating the loss of strain or resilient energy per unit weight of the oil in the oil reservoir to the kinetic energy per unit weight into which it was transformed as it flowed into the tube. The resilient energy per unit weight which is stored in a liquid, and which is transformed into kinetic energy as the pressure is released, can be found by considering a liquid volume of a unit weight that is subject to a pressure which decreases by an amount p. From the unit strain and unit stress relation $\frac{\beta}{B}=\frac{p}{K}$,

$$\beta = \frac{Bp}{K} \tag{2}$$

where β = change in volume for the change in stress p,

B = original volume or $1/\rho$ for unit weight, ρ being the density of the fluid,

K = bulk modulus of the fluid, which varies but little for the pressure range considered.

The change of volume is —,

$$\beta = \frac{p}{K\rho} \tag{2a}$$

The differential energy released per unit weight for a differential pressure change is

$$dE=\frac{1}{K\rho}\,p\,dp \tag{3}$$

Integrating equation (3) between the limits p_2 and p_1 the total energy released is

$$E=\frac{p_2^2-p_1^2}{2K\rho} \tag{4}$$

Equating the loss in resilient energy per unit weight to the kinetic energy per unit weight,

$$\frac{p_2^2-p_1^2}{2K\rho}=\frac{v^2}{2g} \tag{5}$$

where p_2 is the pressure in the oil reservoir, p_1 is the pressure in the injection tube, and v is the velocity through the timing value at any time during the flow. The dissipation of energy due to the viscosity of the oil has been neglected since little is known of internal losses in the oil at the high pressures considered. The small deviation between the computed curve for the closing of the valve and the experimental curve indicates that the effect of the viscous dissipation of energy is small. Solving (5) for

$$v=\sqrt{\frac{g(p_2^2-p_1^2)}{K\rho}} \tag{5a}$$

The average velocity is

$$\overline{v}=\frac{1}{(p_2-p_1)}\int_{p_1}^{p_2}p\,dv \tag{6}$$

Differentiating equation (5a), substituting in equation (6), and integrating between the limits $p_2=8{,}000$ pounds per square inch and $p_1=1{,}000$ pounds per square inch, the average velocity is found to be 121 feet per second. Substituting in equation (1a).

$$t=0.0028 \text{ second}$$

The compression of the oil in the injection tube was completed 0.0028 second after the timing valve stem left the seat. The total time from the beginning of the stem motion was 0.0028 second plus 0.00039 second, or 0.0032 second. The total oil volume that left the oil reservoir during this time was $0.0132+0.0006+1.99\ (0.0028-0.0015)=0.0164$ cubic inch. This reduced the pressure in the oil reservoir to 7,830 pounds per square inch.

REFERENCES

1. Beardsley, E. G.: "N. A. C. A. Spray Photography Apparatus for Studying Fuel Sprays from Oil Engine Injection Valves and Test Results from Several Researches." N. A. C. A. Technical Report No. 274. (1927.)
2. Michel, A. G. M.: "The Mechanical Properties of Fluids," a collective work, Applied Physics Series, 1923. xiv 362 pp., tables and figures. Glasgow, Blackie & Sons (Ltd.), pp. 116–118.
3. Herschel, Winslow H.: "Standardization of the Saybolt Universal Viscosimeter." Technologic Paper of the Bureau of Standards. No. 112, June, 1918.
4. Fowle, E. F.: Smithsonian Physical Tables, 1927. 7th edition, revised, xlvi 458 pp. 579 tables. Washington, Smithsonian Institution, pp. 155–157.
5. Hersey, M. D.: The Theory of the Torsion and the Rolling Ball Viscosimeters and Their Use in Measuring the Effect of Pressure on Viscosity. Journal of Washington Academy of Sciences, vol. 6, 1916, pp. 525–530.

U. S. GOVERNMENT PRINTING OFFICE: 1929

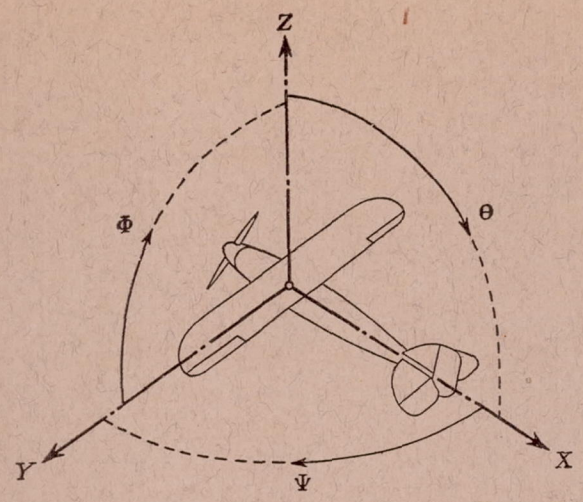

Positive directions of axes and angles (forces and moments) are shown by arrows

Axis		Force (parallel to axis) symbol	Moment about axis			Angle		Velocities	
Designation	Symbol		Designation	Symbol	Positive direction	Designation	Symbol	Linear (component along axis)	Angular
Longitudinal	X	X	rolling	L	$Y \longrightarrow Z$	roll	Φ	u	p
Lateral	Y	Y	pitching	M	$Z \longrightarrow X$	pitch	Θ	v	q
Normal	Z	Z	yawing	N	$X \longrightarrow Y$	yaw	Ψ	w	r

Absolute coefficients of moment

$$C_L = \frac{L}{qbS} \qquad C_M = \frac{M}{qcS} \qquad C_N = \frac{N}{qfS}$$

Angle of set of control surface (relative to neutral position), δ. (Indicate surface by proper subscript.)

4. PROPELLER SYMBOLS

D, Diameter.
p_e, Effective pitch.
p_g, Mean geometric pitch.
p_s, Standard pitch.
p_v, Zero thrust.
p_a, Zero torque.
p/D, Pitch ratio.
V', Inflow velocity.
V_s, Slip stream velocity.

T, Thrust.
Q, Torque.
P, Power.
(If "coefficients" are introduced all units used must be consistent.)
η, Efficiency $= T\,V/P$.
n, Revolutions per sec., r. p. s.
N, Revolutions per minute, r. p. m.
Φ, Effective helix angle $= \tan^{-1}\left(\frac{V}{2\pi r n}\right)$

5. NUMERICAL RELATIONS

1 hp = 76.04 kg/m/s = 550 lb./ft./sec.
1 kg/m/s = 0.01315 hp
1 mi./hr. = 0.44704 m/s
1 m/s = 2.23693 mi./hr.

1 lb. = 0.4535924277 kg
1 kg = 2.2046224 lb.
1 mi. = 1609.35 m = 5280 ft.
1 m = 3.2808333 ft.