L-162

NATIONAL ADVISORY COMMITTEE FOR AERONAUTICS

# WARTIME REPORT

ORIGINALLY ISSUED
June 1945 as
Advance Confidential Report L5F07

## EFFECTS ON LOW-SPEED SPRAY CHARACTERISTICS OF VARIOUS MODIFICATIONS TO A POWERED MODEL OF THE BOEING XPBB-1 FLYING BOAT

By Douglas A. King and Newton A. Mas

Langley Memorial Aeronautical Laboratory
Langley Field, Va.

PROPERTY OF JET PROPULSION LABORATORY LIBRARY
CALIFORNIA INSTITUTE OF TECHNOLOGY

NACA

WASHINGTON

NACA WARTIME REPORTS are reprints of papers originally issued to provide rapid distribution of advance research results to an authorized group requiring them for the war effort. They were previously held under a security status but are now unclassified. Some of these reports were not technically edited. All have been reproduced without change in order to expedite general distribution.

NATIONAL ADVISORY COMMITTEE FOR AERONAUTICS

ADVANCE CONFIDENTIAL REPORT

# EFFECTS ON LOW-SPEED SPRAY CHARACTERISTICS OF VARIOUS MODIFICATIONS TO A POWERED MODEL OF THE BOEING XPBB-1 FLYING BOAT

By Douglas A. King and Newton A. Mas

## SUMMARY

A $\frac{1}{10}$-size powered model of the Boeing XPBB-1 flying boat, which was dynamically similar to the full-size flying boat, was tested in Langley tank no. 1 to observe the effects of trim and powered propellers, of lengths of forebody and afterbody, and of various spray strips upon the low-speed spray characteristics.

The effects of powering the propellers were to lower the trim and to pick up spray that would not strike the propeller disks when the propellers were windmilling. Lowering the trim increased the height of the spray with respect to the hull.

Changes in the length of forebody or afterbody that increased the ratio of forebody length to afterbody length raised the trim and reduced the intensity of spray in the propellers.

Spray strips having the form of thin plates projecting vertically downward from the forebody chines were found to be very effective in preventing spray from striking the propellers. Fillets between the spray strips and the bottom of the hull markedly reduced the effectiveness of the spray strips. The unfilleted vertical spray strips were about as effective in controlling the spray as spray strips of the same length having an angle of down flare of 30° and extending out from the chine so as to increase the beam by almost 13 percent.

## INTRODUCTION

In a relatively small range of speed, which is just below hump speed, the spray from the forebodies of heavily loaded flying boats strikes the propellers. The quantity of spray increases with gross load and has become a factor limiting the gross load at which some flying boats can take off.

The effects of load and forebody length, length-beam ratio, angle of dead rise, spray strips, and chine flare upon the spray characteristics of various models have been reported in references 1 to 6. The tests of references 1 to 6 were made on unpowered models. Other model tests (reference 7) have shown that the inflow of air to powered propellers picks up spray that does not hit the propeller disks when the propellers are windmilling. In addition, powering the propellers causes the trim of a powered model to be lower than that of the same model without power. The spray characteristics of any hull are affected by trim.

The effects upon the spray characteristics of trim, powered propellers, length-beam ratio of the forebody and afterbody, and of several types of spray strips attached to the forebody chines were investigated by tests of a powered model of the Boeing XPBB-1 flying boat. The effects of some of these modifications on resistance and longitudinal stability were also investigated.

## SYMBOLS

$C_{\Delta_o}$ gross-load coefficient $\left(\frac{\Delta_o}{wb^3}\right)$

$C_R$ resistance coefficient $\left(\frac{R}{wb^3}\right)$

$C_V$ speed coefficient $\left(\frac{V}{\sqrt{gb}}\right)$

where

$\Delta_o$ gross load on water, pounds

w weight density of water, pounds per cubic foot (63.4 for these tests)

b beam of hull, feet

R resistance, pounds

V speed, feet per second

g acceleration due to gravity, 32.2 feet per second per second

and

$\delta_f$ flap deflection

$\delta_e$ elevator deflection

$L_F$ forebody length

$L_A$ afterbody length

d depth of spray strips of forebodies $F_{10}$ and $F_{11}$

$\tau$ trim, degrees

r radius of fillet between spray strip and bottom of hull of forebodies $F_{12}$ and $F_{13}$

Any consistent system of units may be used.

## MODEL

The basic model, Langley tank model $174F_1A_4$, was a $\frac{1}{10}$-size model of the Boeing XPBB-1 flying boat and was dynamically similar to the full-size flying boat. A sketch showing the general arrangement of the model is given in figure 1. The basic model was supplied by the Boeing Aircraft Company.

The model differed from the actual flying boat in that the bow gun turret and pilot's canopy were replaced by a simpler deck and the waist gun turrets were omitted. As is customary at the Langley tanks, leading-edge slats were added to the model to correct for the loss in maximum lift that would be obtained with the model wing without slats at the low Reynolds number required in tank tests of dynamic models.

The model was powered by two 2-horsepower variable-frequency alternating-current motors, which drove three-blade metal propellers 1.65 feet in diameter. The propellers operated at such a combination of blade angle and rotational speed that the variation of thrust with forward speed approximated that corresponding to the full-size flying boat.

Two forebody lengths, two afterbody lengths, and seven spray strips were tested. Sketches and designations of the various parts and modifications of the model are given in figure 2. The basic forebody $F_1$ (fig. 2(a)) had a length of 42.65 inches and an angle of dead rise of 17.9°. The bottom adjacent to the chine was horizontal. Forebody $F_4$ (fig. 2(b)) was 4 inches longer than the basic forebody.

All the spray strips (figs. 2(c) to 2(h)) were attached to the basic forebody $F_1$. The spray strips that increased the beam had an angle of down flare of 30° and projected 0.8 inch out from the sides of the hull. They differed only in length. A length of 9.75 inches was removed from the aft ends of the spray strips of forebody $F_6$ to form forebody $F_7$. The forward part of the spray strips of forebody $F_7$ was faired into the hull to form forebody $F_8$. The spray strips that did not increase the beam were formed from $\frac{1}{16}$-inch metal strips projecting vertically downward from the chines and had approximately the same shape in elevation view as the spray strips of forebody $F_8$. The depth of the spray strips of forebody $F_{10}$ was 0.8 inch and that of the spray strips of forebody $F_{11}$ was 0.4 inch. Fillets of 1-inch and $\frac{1}{4}$-inch radius were inserted between the spray strips of forebody $F_{11}$ to form forebodies $F_{12}$ and $F_{13}$, respectively.

The basic afterbody $A_4$ (fig. 2(i)) had a length of 33.4 inches and an angle of dead rise of 20°. The length of the extended afterbody $A_2$ (fig. 2(j)) was 43.4 inches. The keels of both afterbodies were at an angle of 5.4° to the forebody keel.

## TESTING APPARATUS AND PROCEDURE

Tests were conducted in Langley tank no. 1 with the apparatus substantially as described in reference 8 except that in the present tests the model was towed under the main carriage.

The ranges of speed in which spray entered the propellers were determined visually during runs made at low accelerations.

Tests were made at gross-load coefficients $C_{\Delta_0}$ of 0.91, 1.14, and 1.28, which correspond, respectively, to gross loads of 65,500, 82,300, and 92,400 pounds. The condition for the tests was for full-power operation, free to trim, at a flap deflection $\delta_f$ of 20° and an elevator deflection $\delta_e$ of -10°. The center of gravity was located at 28 percent of the mean aerodynamic chord.

Measurements of resistance were made during runs at constant speed with propellers windmilling. The resistance includes both the water resistance and the air drag of the model but not the air drag of the towing gear.

In the tests made to determine the effects of trim and of air flow into the propellers on the spray characteristics, the gross-load coefficient was 0.91 (full-size gross load, 65,500 pounds) and the flaps were deflected 45°. Photographs of the spray were taken at several constant speeds at power-off and power-on conditions. For each speed tested, two fixed trims were used, which corresponded to the free-to-trim trims for the two conditions of power.

## RESULTS AND DISCUSSION

### Effects of Trim and Powered Propellers

The effects of trim and powered propellers on spray characteristics are shown in figure 3. These photographs were taken with the model operating at a gross-load coefficient of 0.91 and a speed coefficient of 1.73. Lowering the trim approximately 2° increased the height of the bow spray approximately 1 inch with respect to the model. The powered propellers picked up spray from the bow "blisters" even though the blisters were relatively far below the propeller disks.

### Effect of Length of Forebody and Afterbody

The effect of length of forebody and afterbody on the range of speeds in which spray struck the propellers is given in figure 4 and in the following table:

| Model | $\frac{L_F}{L_A}$ | Range of $C_V$ in which spray struck propellers | Trim (deg) | Range of $C_V$ in which spray struck propellers | Trim (deg) |
|---|---|---|---|---|---|
| | | $C_{\Delta_o} = 1.14$ | | $C_{\Delta_o} = 0.91$ | |
| $F_1A_4$ | 1.28 | 1.5 to 2.3 | 6.0 to 8.9 | 1.6 to 2.0 | 6.2 to 7.0 |
| $F_4A_2$ | 1.08 | 1.4 to 2.6 | 4.4 to 6.7 | 1.6 to 2.2 | 4.4 to 5.0 |
| $F_1A_2$ | .98 | 1.4 to 2.7 | 3.7 to 7.0 | 1.6 to 2.5 | 3.8 to 5.3 |

For convenience, the length of the forebody is taken as the distance, measured parallel to the base line, from the step to the intersection of the keel and chine at the bow.

Extending the basic afterbody 30 percent of the original length (80 percent of the beam) to form model $174F_1A_2$ lowered the trim approximately 3° in the range of speed in which spray struck the propellers and

greatly increased the intensity and volume of spray in the propellers. The range of speed in which spray struck the propellers was greatly increased. Extending the length of the forebody of model $174F_1A_2$ 9 percent of the original length (32 percent of the beam) to form model $174F_4A_2$ raised the trim approximately 1° and decreased the intensity of the spray that struck the propellers. This decrease in intensity would be expected from the results of reference 1.

Decreasing the ratio of forebody length to afterbody length lowered the free-to-trim trim, increased the range of speed in which spray struck the propellers, and increased the intensity of the spray. As has been shown, lowering the trim increased the height of the spray and brought it more under the influence of the inflow to the propellers.

The effect of length of forebody and afterbody on the variation of trim and resistance with speed is shown in figure 5. The extended afterbody $A_2$ lowered the trim in the speed range in which spray struck the propellers approximately 3° and caused a high peak in the resistance curve at a speed less than hump speed. At the high trims caused by the load coefficient and elevator deflection in the planing range, the extended afterbody lowered the trim approximately 2°. The hump resistance was decreased approximately 13 percent and the resistance at high speed was decreased slightly. Extending the length of the forebody (changing from model $174F_1A_2$ to model $174F_4A_2$) raised the low-speed trim approximately 1° and decreased the resistance at all speeds to a value below that of the basic model. These trends are in accordance with the results of reference 3.

The upper trim limits of stability of model $174F_1A_2$ (basic forebody, extended afterbody) were about 1° lower than those of model $174F_1A_4$ (basic model) and about the same as those of model $174F_4A_2$ (extended forebody and afterbody). The low-speed peak of the lower trim limit of stability of the models with the extended afterbody $A_2$ occurred at a lower trim and higher speed than that of the basic model. At higher speeds the lower trim limits of stability of all three models were approximately the same. These trends are in accordance with the results of reference 9, in which a general discussion of trim limits of stability is presented.

## Effect of Angle of Dead Rise

As shown in figure 4, the range of speed in which spray entered the propellers of the model with an angle of dead rise of 23° was about the same as that of the basic model, which had an angle of dead rise of 17.9°. The intensity of spray in the propellers was approximately the same for both models. These results are not in accordance with the results of references 3 and 4, the tests of which were made on unpowered models.

## Effect of Various Spray Strips

In indication of the effectiveness of the various spray strips on the basic forebody in controlling the spray is given in table I.

Spray strips that increased beam.- The spray strips of forebodies $F_6$, $F_7$, and $F_8$ projected 0.8 inch (0.064 beam) beyond the chines, which increased the beam 13 percent, and had an angle of down flare of 30°. They differed only in length. The load and speed coefficients of the models with forebodies $F_6$, $F_7$, and $F_8$ were based on the beam at the step, which was the linear dimension used in computing the coefficients of the basic model. Equal load and speed coefficients therefore represent equal loads and speeds in all cases.

The spray strips were similar to spray strips that had been shown to be effective in tests of another model in the Langley tank no. 1. These spray strips were reported by the manufacturer to be effective when applied to the full-size flying boat. In the present tests, the spray strips of forebodies $F_6$, $F_7$, and $F_8$ were also effective in keeping spray out of the propellers. Shortening the spray strips made the spray slightly more intense, but, as shown in a photograph in table I, the spray of the model with the shortest spray strips (model $174F_8A_4$) did not strike the propellers. The spray appeared in the form of individual drops instead of the smooth blister that may be observed in tests of most models.

The angle of down flare of the spray strips of forebody $F_8$ was changed from 30° to 20° with a resulting

slight loss in effectiveness in controlling the spray. Only visual observations were made and no model number was assigned to this modification.

The variation of trim and resistance with speed of model $174F_8A_4$ is compared with that of the basic model in figure 6. Below the hump speed, the spray strips increased the trim and resistance slightly. The hump resistance of model $174F_8A_4$ was about 3 percent greater than that of the basic model.

The addition of these spray strips to the forebody lowered the trim limits of stability slightly.

Spray strips that did not increase beam.- The spray strips of forebodies $F_{10}$, $F_{11}$, $F_{12}$, and $F_{13}$ were formed from $\frac{1}{16}$-inch metal strips projecting vertically downward from the chines.

The spray strip of forebody $F_{10}$, having a depth of 0.8 inch (0.064 beam), was very effective in keeping spray out of the propellers. Only occasional and momentary splashes of spray struck the propellers at speed coefficients from 1.55 to 2.07.

Decreasing the depth of the spray strips to 0.04 inch (0.032 beam) to form forebody $F_{11}$ increased the intensity of the spray very slightly. As shown by the photographs in table I, the vertical spray strips of forebody $F_{11}$ were about as effective in controlling the spray as were the spray strips of forebody $F_8$.

Adding fairings of 1-inch and $\frac{1}{4}$-inch radii to form forebodies $F_{12}$ and $F_{13}$, respectively, almost completely nullified the effectiveness of the spray strip of forebody $F_{11}$ in keeping the spray out of the propellers. The intensity of the spray of forebodies $F_{12}$ and $F_{13}$ was somewhat less than that of the basic forebody $F_1$, and appeared in the form of individual drops rather than in the more usual relatively smooth blister.

The effects of the spray strips of forebodies $F_{10}$, $F_{11}$, $F_{12}$, and $F_{13}$ upon the resistance and stability characteristics of the model were not determined.

The addition of spray strips to any flying boat would probably increase the air drag of the flying boat. In this regard, the vertical spray strips of forebody $F_{11}$ offer an advantage over other types in that they could be retracted vertically upward on the sides of the hull.

## CONCLUSIONS

Tests of a $\frac{1}{10}$-size model of the Boeing XPBB-1 flying boat, which was dynamically similar to the full-size flying boat, were made with propellers operating in order to determine the effects of trim and powered propellers, length of forebody and afterbody, and various spray strips on the low-speed spray characteristics. The tests, which may reasonably be expected to apply to other types of flying boat, indicated the following conclusions:

1. Spray strips that extend vertically downward from the forebody chines without appreciably increasing the beam were about as effective in controlling the bow spray as spray strips that extend outward and downward from the chines and increase the beam. Both types of spray strips were effective in keeping spray out of the propellers.

2. Changes in the length of forebody or afterbody that increased the ratio of forebody length to afterbody length raised the trim and decreased the intensity of spray in the propellers.

3. Lowering the trim increased the height of the bow spray with respect to the hull.

Langley Memorial Aeronautical Laboratory
National Advisory Committee for Aeronautics
Langley Field, Va.

REFERENCES

1. Parkinson, John B.: Design Criterions for the Dimensions of the Forebody of a Long-Range Flying Boat. NACA ARR No. 3K08, 1943.

2. Bell, Joe W., Garrison, Charlie C., and Zeck, Howard: Effect of Length-Beam Ratio on Resistance and Spray of Three Models of Flying-Boat Hulls. NACA ARR No. 3J23, 1943.

3. Parkinson, John B., Olson, Roland E., and House, Rufus O.: Hydrodynamic and Aerodynamic Tests of a Family of Models of Seaplane Floats with Varying Angles of Dead Rise. N.A.C.A. Models 57-A, 57-B, and 57-C. NACA TN No. 716, 1939.

4. Bell, Joe W., and Willis, John M., Jr.: The Effects of Angle of Dead Rise and Angle of Afterbody Keel on the Resistance of a Model of a Flying-Boat Hull. NACA ARR, Feb. 1943.

5. Truscott, Starr: The Effect of Spray Strips on the Take-Off Performance of a Model of a Flying-Boat Hull. NACA Rep. No. 503, 1934.

6. Bell, Joe W., and Olson, Roland E.: Tank Tests to Determine the Effects of the Chine Flare of a Flying-Boat Hull - N.A.C.A. Model Series 62 and 69. NACA TN No. 725, 1939.

7. Parkinson, John B., and Olson, Roland E.: Tank Tests of a 1/5 Full-Size Dynamically Similar Model of the Army OA-9 Amphibian with Motor-Driven Propellers - NACA Model 117. NACA ARR, Dec. 1941.

8. Olson, Roland E., and Land, Norman S.: The Longitudinal Stability of Flying Boats as Determined by Tests of Models in the NACA Tank. I - Methods Used for the Investigation of Longitudinal-Stability Characteristics. NACA ARR, Nov. 1942.

9. Truscott, Starr, and Olson, Roland E.: The Longitudinal Stability of Flying Boats as Determined by Tests of Models in the NACA Tank. II - Effect of Variations in Form of Hull on Longitudinal Stability. NACA ARR, Nov. 1942.

TABLE I.- EFFECTIVENESS OF VARIOUS SPRAY STRIPS

| Transverse half-section | Forebody | Spray characteristics at $C_{\Delta_0} = 1.14$ |
|---|---|---|
| | $F_1$ | 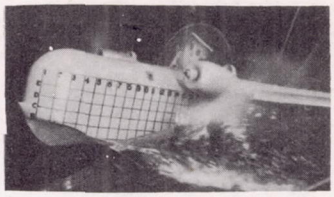 $F_1A_4$; $C_V = 1.90$ Heavy spray in propellers at speed coefficients from 1.47 to 2.33 |
| | $F_4$ | Some reduction in intensity of spray and in range of speed in which spray struck the propellers |
| 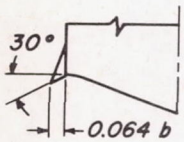 | $F_6$ and $F_7$ | No spray struck the propellers |
| | $F_8$ | $F_8A_4$; $C_V = 1.90$ Spray slightly more intense than for $F_6$, but no spray struck the propellers |
| 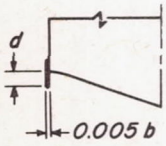 $F_{10}$; d = 0.064b<br>$F_{11}$; d = 0.032b | $F_{10}$ | Only occasional and momentary splashes of spray struck the propellers at speed coefficients from 1.55 to 2.07 |
| | $F_{11}$ | 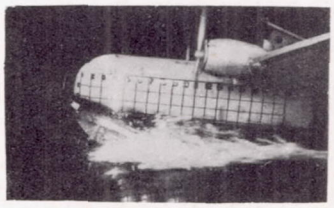 $F_{11}A_4$; $C_V = 1.90$ About the same as $F_{10}$ except splashes more frequent |
| 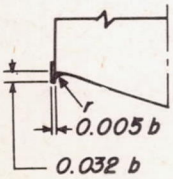 $F_{12}$; r = 0.08b<br>$F_{13}$; r = 0.02b | $F_{12}$ | Heavy spray struck propellers at speed coefficients from 1.55 to 2.07; somewhat less spray struck propellers than for $F_1$ |
| | $F_{13}$ | About the same as for $F_{12}$ |

NATIONAL ADVISORY
COMMITTEE FOR AERONAUTICS

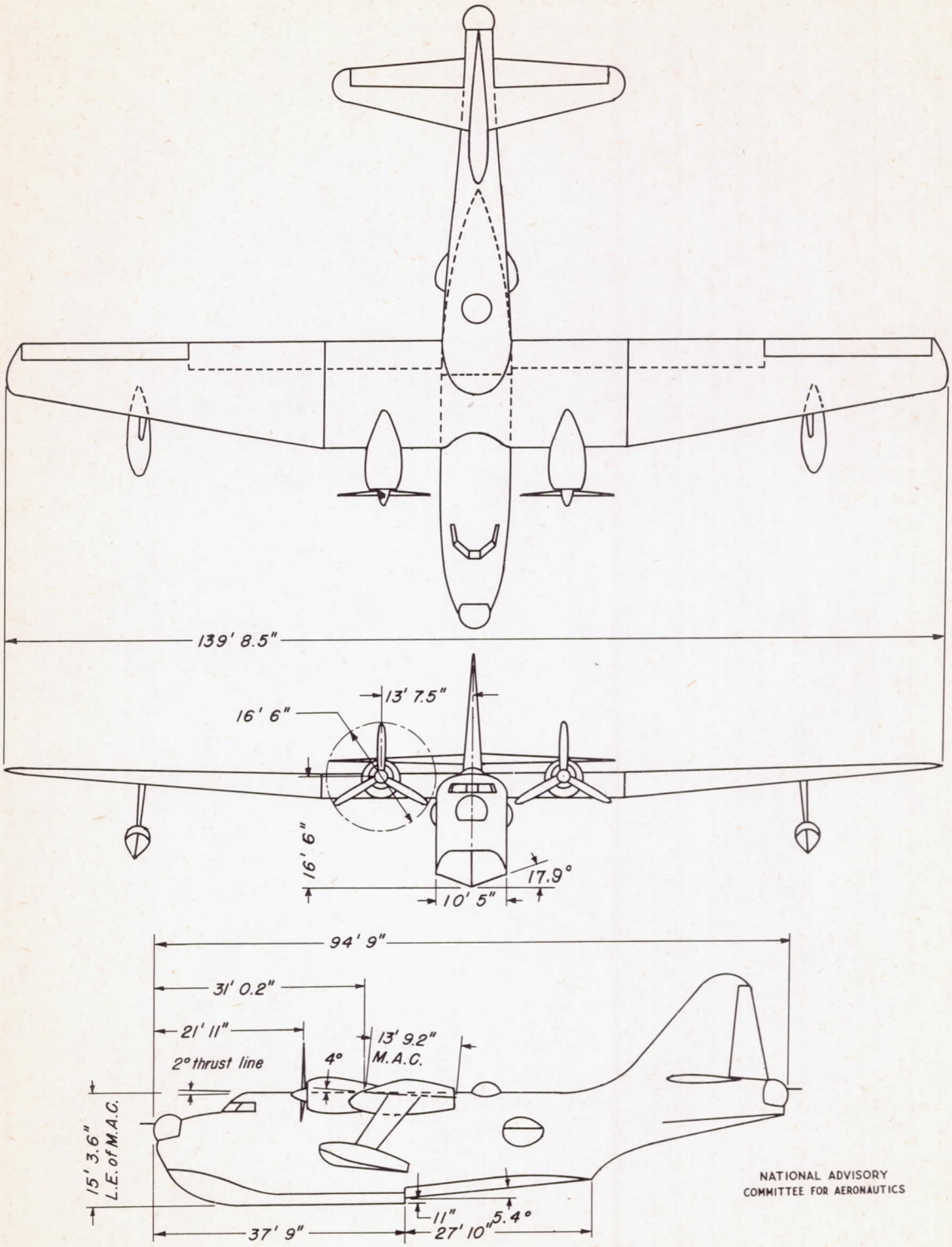


*Figure 1.- General arrangement of Boeing XPBB-1 flying boat.*

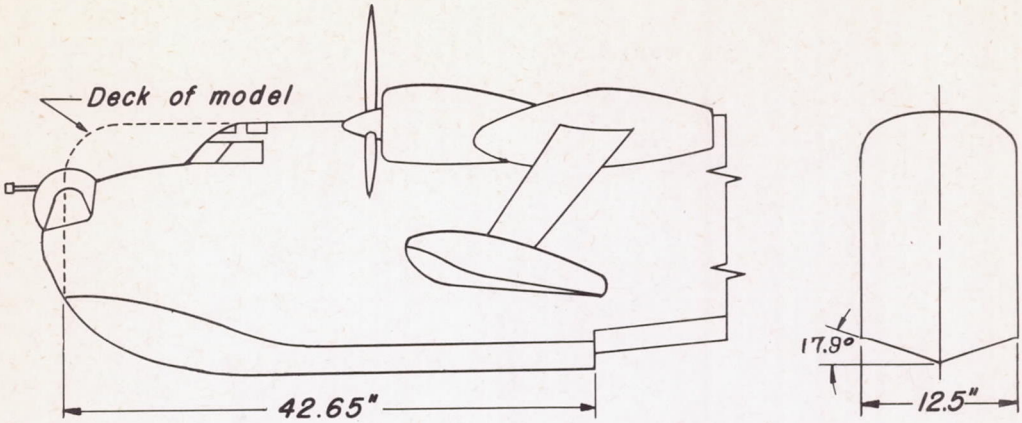


(a) Basic forebody, $F_1$.

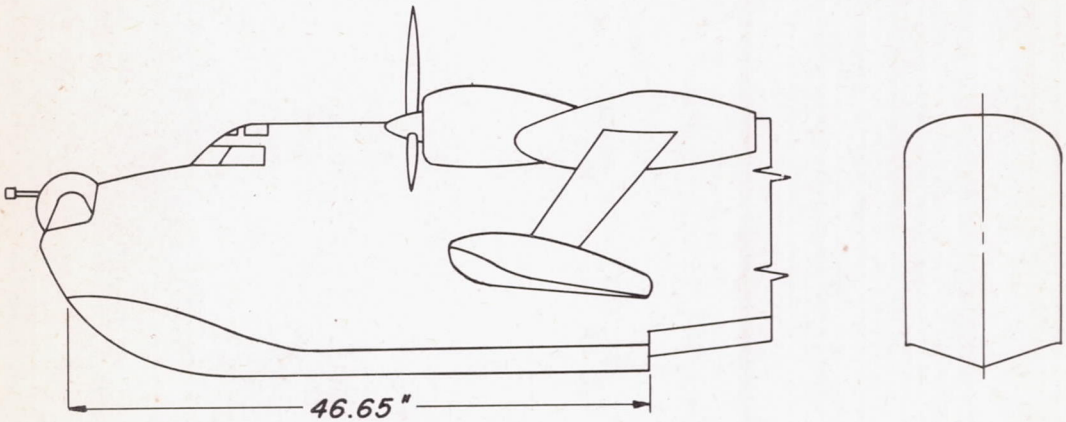


(b) Extended forebody, $F_4$.

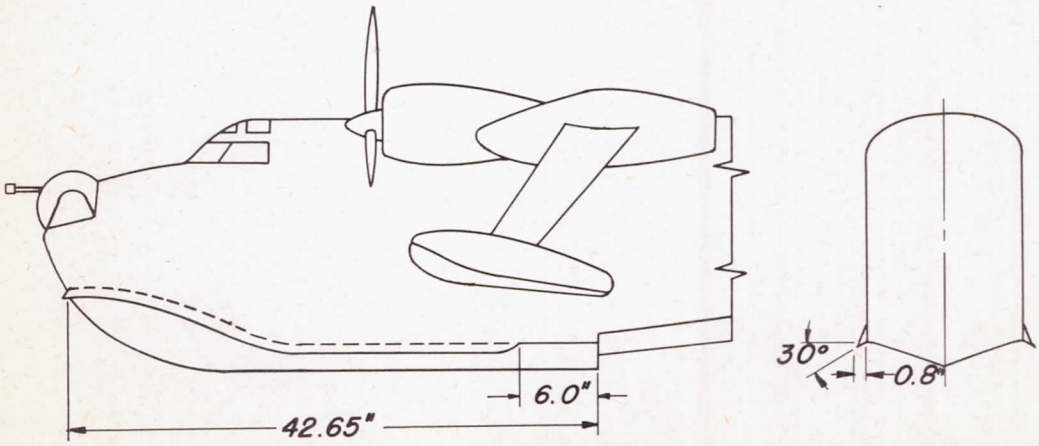


(c) Forebody $F_6$

NATIONAL ADVISORY COMMITTEE FOR AERONAUTICS

Figure 2.- Sketches of forebodies and afterbodies used in tests.

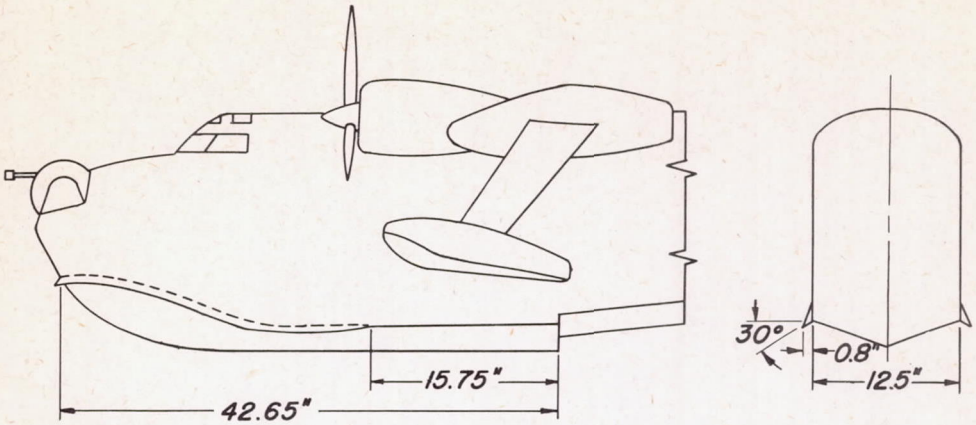


(d) Forebody $F_7$.

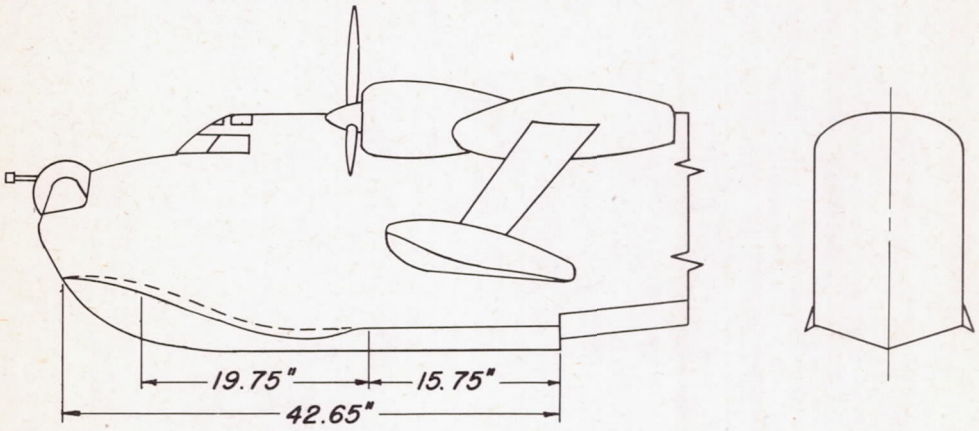


(e) Forebody $F_8$.

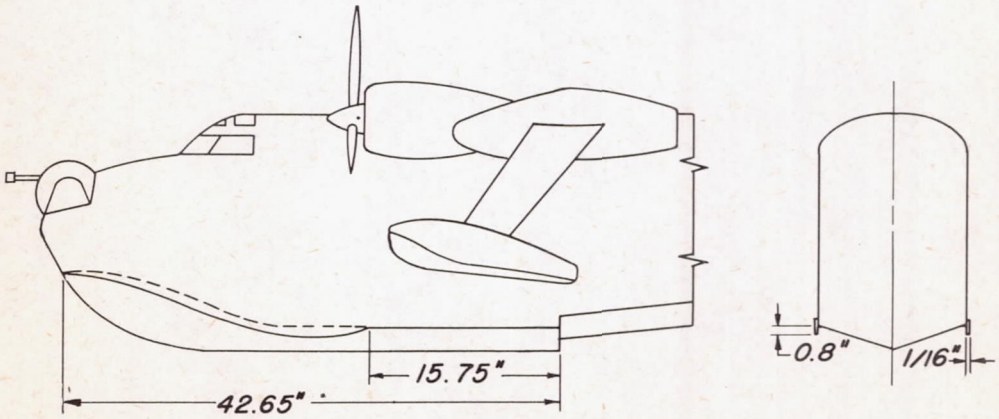


(f) Forebody $F_{10}$.

NATIONAL ADVISORY
COMMITTEE FOR AERONAUTICS

Figure 2.- Continued.

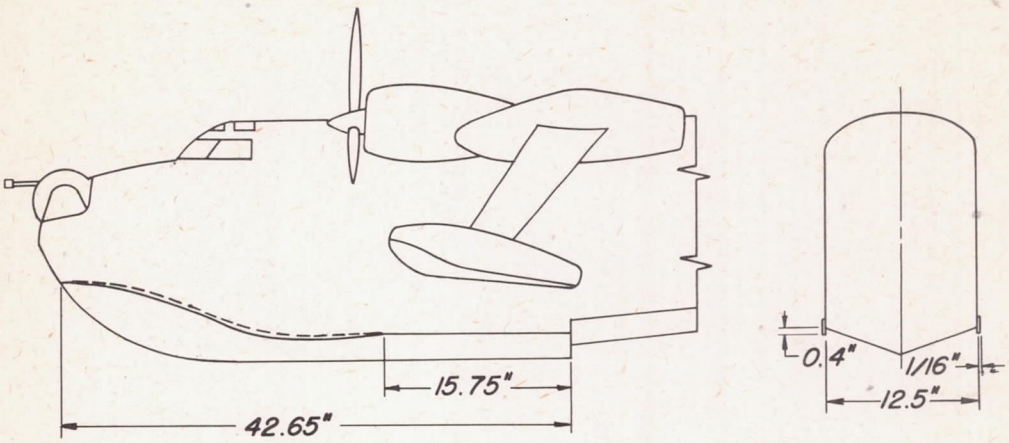


(g) Forebody $F_{11}$.

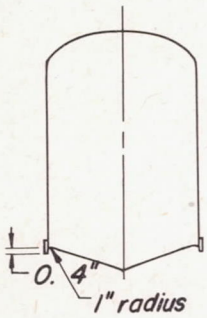


(h) Forebody $F_{12}$.

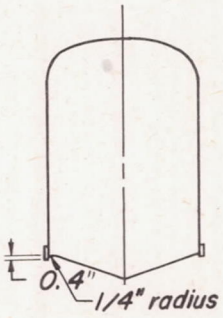


(i) Forebody $F_{13}$.

NATIONAL ADVISORY
COMMITTEE FOR AERONAUTICS

Figure 2.- Continued.

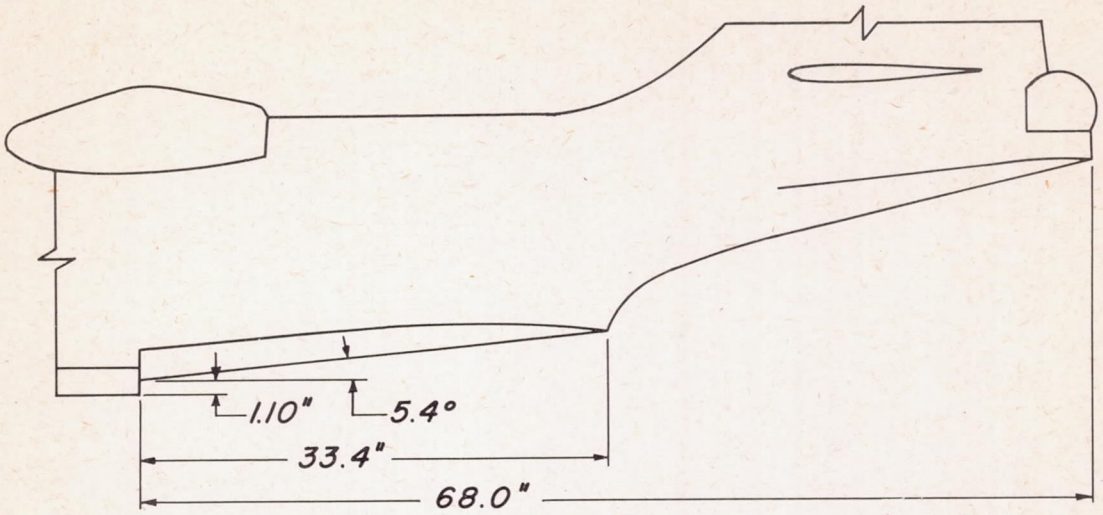


(j) Basic afterbody, $A_4$.

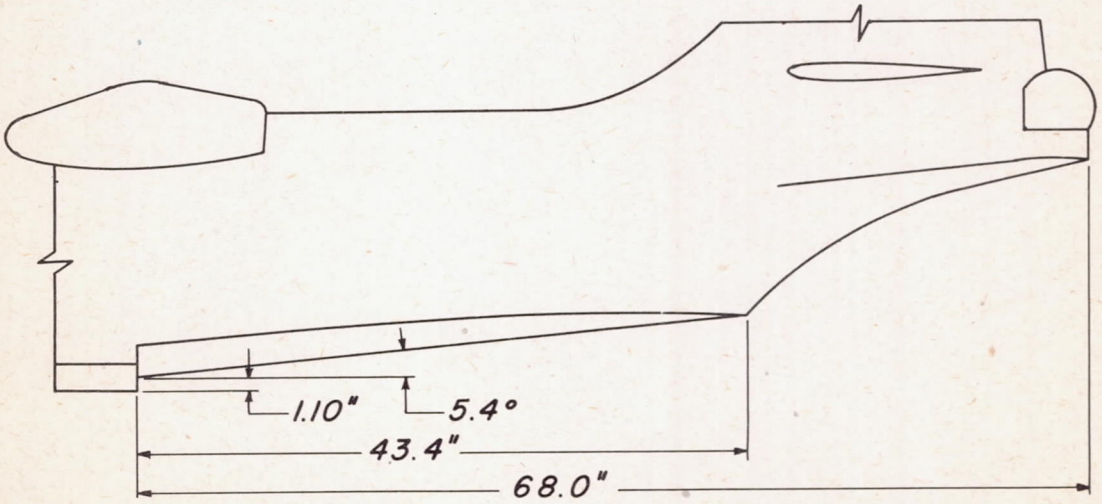


(k) Extended afterbody, $A_2$.

NATIONAL ADVISORY
COMMITTEE FOR AERONAUTICS

Figure 2.- Concluded.

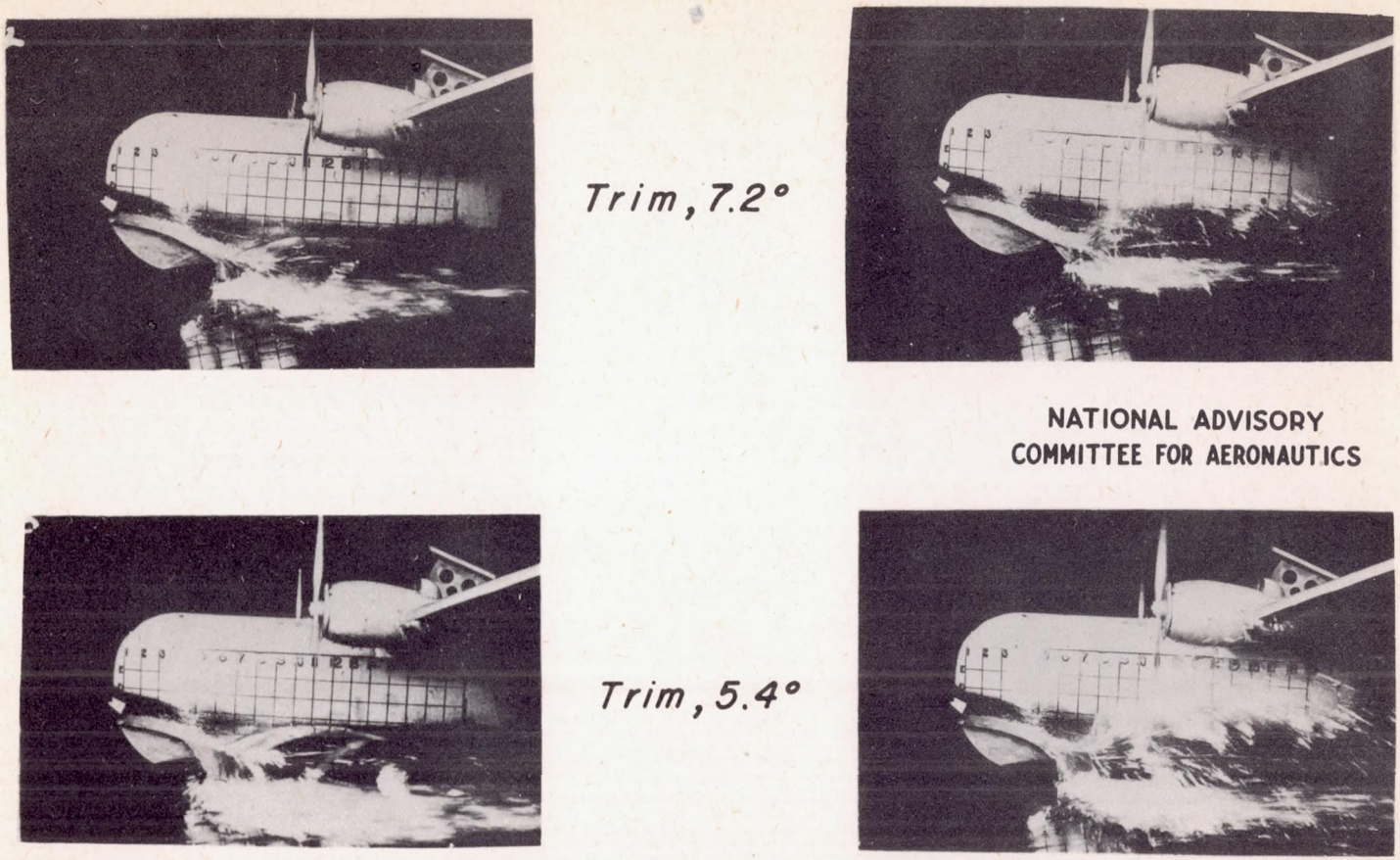


NATIONAL ADVISORY
COMMITTEE FOR AERONAUTICS

Figure 3.- Effect of trim and air flow through the propellers on bow spray. Basic model; $C_{\Delta_0}$, 0.91; $C_V$, 1.73.

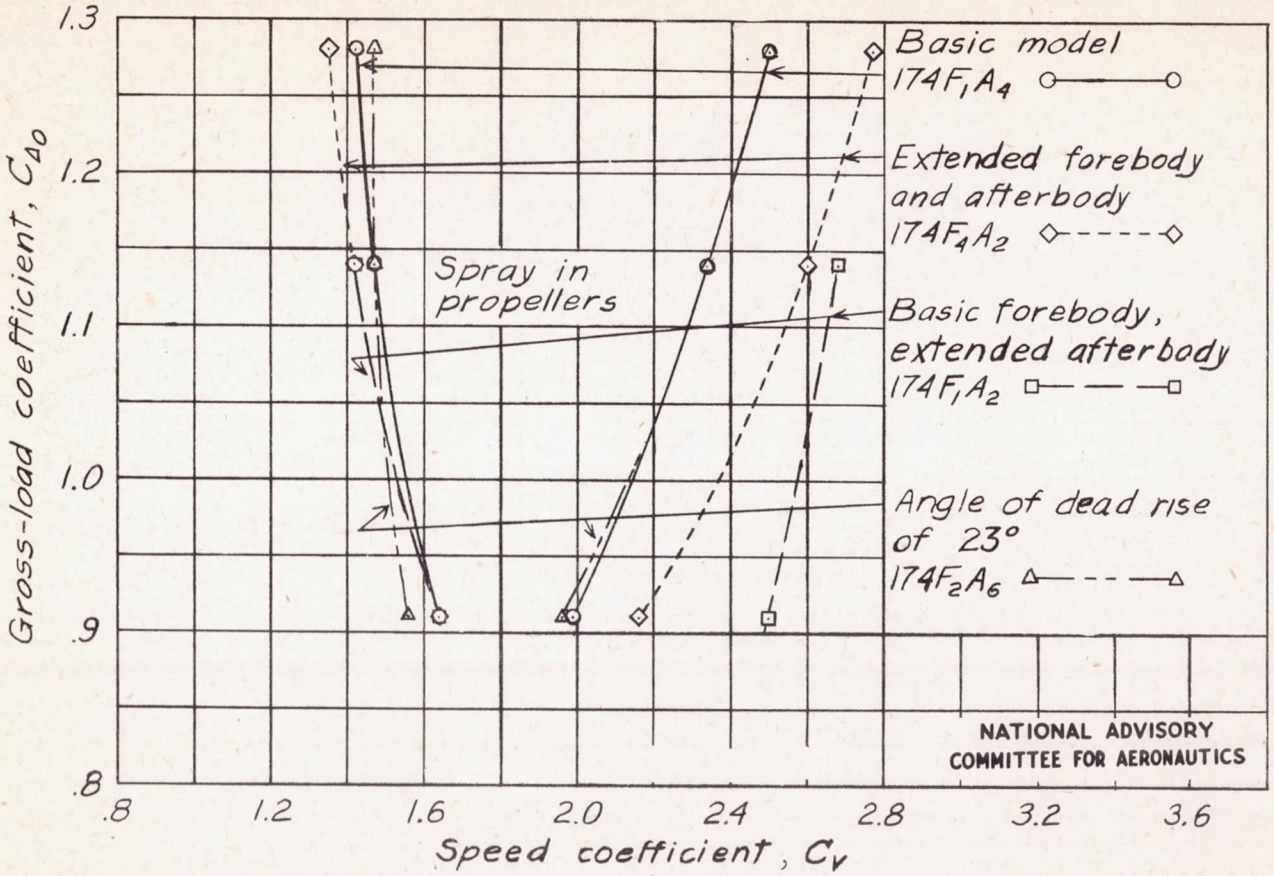


Figure 4 - Effects of length of forebody and afterbody and angle of dead rise on range of speed in which spray strikes propellers. Full power. The two curves shown for each model represent range of speed coefficient in which spray struck propellers.

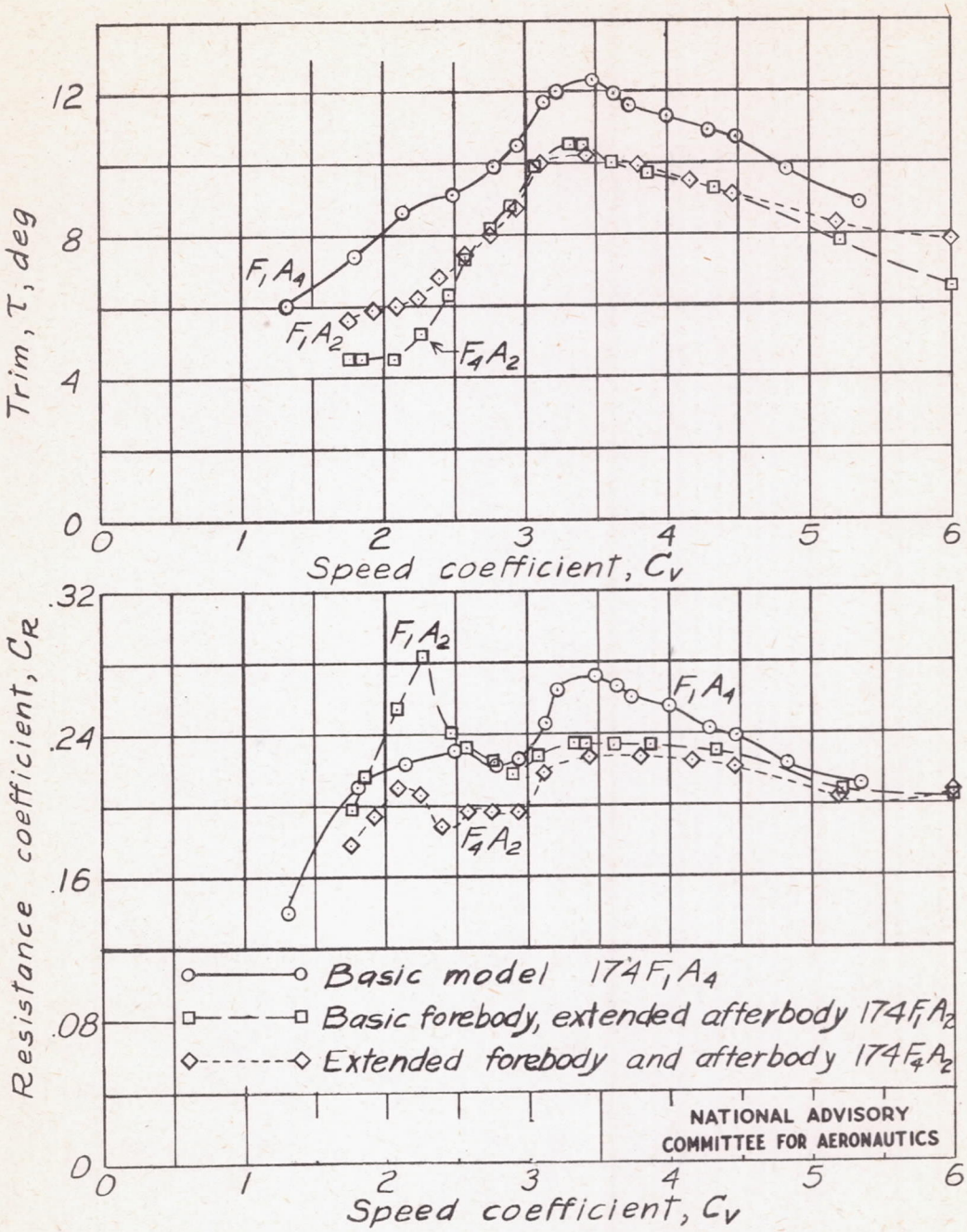


Figure 5.- Effect of length of forebody and afterbody on the variation of trim and resistance with speed. Gross-load coefficient $C_{\Delta_0}$, 1.14; power off.

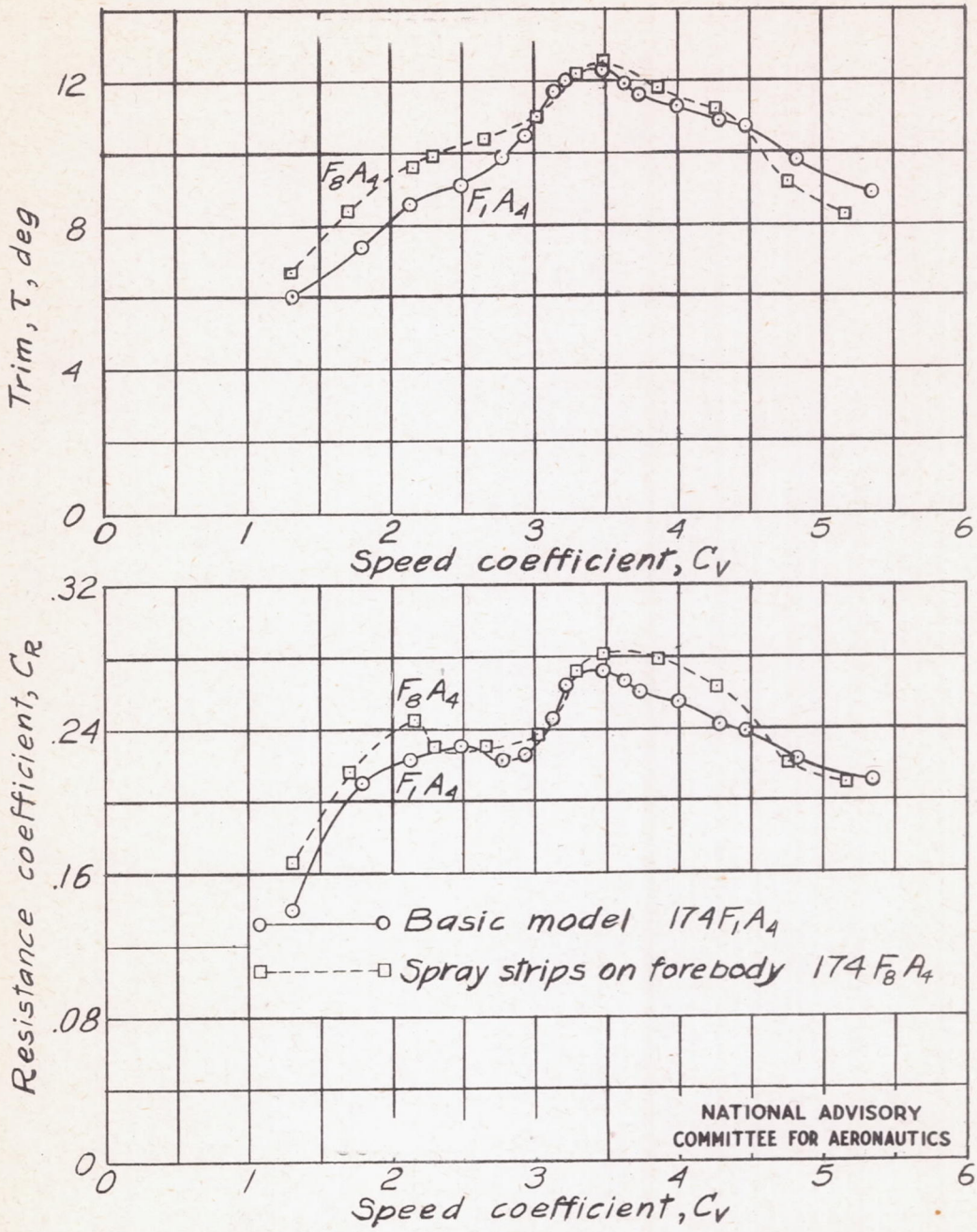


Figure 6 - Effect of adding spray strips of forebody F8 to the basic model on the variation of trim and resistance with speed. Gross-load coefficient $C_\Delta$ 1.14: power off.