L-725

NATIONAL ADVISORY COMMITTEE FOR AERONAUTICS

WARTIME REPORT

ORIGINALLY ISSUED
March 1944 as
Restricted Bulletin L4C28

PRELIMINARY TANK EXPERIMENTS WITH A HYDROFOIL ON A PLANING-TAIL SEAPLANE HULL

By Kenneth L. Wadlin

Langley Memorial Aeronautical Laboratory
Langley Field, Va.

CASE FILE COPY

JPL LIBRARY
CALIFORNIA INSTITUTE OF TECHNOLOGY

NACA

WASHINGTON

NACA WARTIME REPORTS are reprints of papers originally issued to provide rapid distribution of advance research results to an authorized group requiring them for the war effort. They were previously held under a security status but are now unclassified. Some of these reports were not technically edited. All have been reproduced without change in order to expedite general distribution.

NATIONAL ADVISORY COMMITTEE FOR AERONAUTICS

RESTRICTED BULLETIN No. L4C28

PRELIMINARY TANK EXPERIMENTS WITH A HYDROFOIL ON A PLANING-TAIL SEAPLANE HULL

By Kenneth L. Wadlin

INTRODUCTION

The afterbody of a conventional flying-boat hull performs several functions. It serves as a fairing for the forebody and provides space in which useful load can be carried. The most important functions of the afterbody, however, probably are the provision of buoyancy and trim control at low speeds and the provision of a planing surface that, at speeds in the region of the hump speed, dynamically carries load and controls trim.

In reference 1 an unconventional afterbody called a "planing tail" was proposed. It appeared that a hull with this type of afterbody in conjunction with a forebody having a pointed trailing edge could be made to perform the functions of a conventional flying-boat hull and give some improvements in hydrodynamic resistance and stability characteristics. The further possibility of eliminating the chines on an afterbody of the planing-tail type by adding a hydrofoil to furnish hydrodynamic lift was suggested in reference 1. Some exploratory tests were made to determine the feasibility of using a hydrofoil in this manner and the results of these tests are presented herein. The tests were made in NACA tank no. 2 during July 1943.

PROCEDURE

Because the tests were exploratory in nature, a simple model, representative of the general arrangement desired, was considered as suitable as one that would more nearly approach a finished

flying-boat hull. The model tested was constructed from NACA model 35-A (reference 2) with a hydrofoil mounted on a cylindrical boom replacing the original afterbody.

The arrangements that were tested were designated the NACA 160G series with suffixes one through five added to indicate changes made in the step depth and hydrofoil location as shown in figure 1. The table in this figure indicates the changes and the order in which they were made.

Free-to-trim tests were made in which resistance and trim were measured in accordance with standard practice at the NACA tanks.

All the tests were made at constant speeds. The load on the model was applied by means of dead weights in accordance with the loading curve given in figure 2.

The data from the tests were reduced to the usual nondimensional coefficients. These coefficients are defined as follows:

C_Δ load coefficient $\left(\frac{\Delta}{wb^3}\right)$

C_R resistance coefficient $\left(\frac{R}{wb^3}\right)$

C_V speed coefficient $\left(\frac{V}{\sqrt{gb}}\right)$

where

Δ load on water, pounds

R water resistance, pounds

V speed, feet per second

w specific weight of water, pounds per cubic foot (63.0 lb/cu ft for conditions of these tests)

b maximum beam of hull, feet

g acceleration of gravity, feet per second per second

RESULTS AND DISCUSSION

The series of free-to-trim resistance and trim curves shown in figure 2 were obtained by starting with model 160G-1 and varying the step depth and hydrofoil location.

Previous tests had shown that under approximately the same loading conditions the best trim of the forebody of model 35-A was about 7° in the region of the hump speed and about 6° at the higher speeds. A configuration that would be free to trim at approximately 7° throughout the speed range would therefore most probably be operating very near its best trim.

The trim curve (fig. 2) for the configuration with the deep step and the aftermost location of the hydrofoil (model 160G-1) shows that the trims in the region of the hump speed were approximately $2\frac{1}{2}^{\circ}$ above the best trim for the forebody. A change in the depth of step from 12 inches to 9 inches (model 160G-2) changed the trim to approximately 7° in the region of the hump speed, and some decrease in hump resistance was obtained. The trim and resistance in the speed range just beyond the hump speed were also reduced considerably. Moving the hydrofoil from 33 inches to 28 inches aft of the step (model 160G-3) slightly increased the trims in the speed range just beyond the hump with no appreciable change in resistance. This change in location of the hydrofoil, however, did not appreciably affect trim and resistance in the region of the hump speed.

In general, hydrofoils are unstable when they rise close to the surface of the water and tend to oscillate in and out of the water. This type of instability was present with models 160G-2 and 160G-3 in the intermediate speed range when the hydrofoil

started to clear the water. Even if this instability were not severe in itself, it would possibly excite porpoising. This instability of the hydrofoil was eliminated by moving the hydrofoil from 4 inches to 3 inches below the bottom of the tail (model 160G-4). This change allowed the hydrofoil to clear the water at approximately the same speed as before. In this configuration, however, the afterbody was apparently carrying a greater load at the time the hydrofoil cleared and the necessary stabilizing force was thus provided by the afterbody.

This change in hydrofoil location also produced an additional increase in trim in the speed range just beyond the region of the hump speed, with no appreciable change in resistance.

When the hydrofoil was removed (model 160G-5), the resistance was only slightly changed but the trims were considerably higher in the region of the hump speed because of the loss of the negative trimming moment supplied by the hydrofoil.

The resistances of models 160G-4 and 160G-5 are compared in figure 3 with the minimum resistance (at the same gross-load coefficient) of a conventional flying-boat hull (hull A) that is representative of current design. The resistances of these models are somewhat higher than the resistance of hull A.

In the region of the hump speed, the differences between the trims for the configurations with and without the hydrofoil indicate that the hydrofoil produced considerable lift in this speed range. The change in trim produced by this lift undoubtedly effected the observed improvement in resistance. The same change in trim at the hump speed could be obtained by moving the center of gravity forward on the configuration without the hydrofoil (model 160G-5). This change in center-of-gravity location would give a lower and more desirable trim at rest and would cause the model to operate more nearly at the best trim for the forebody at all speeds except the very highest. The resistance characteristics in this case would probably be at least as good as those for the model tested with the best location of the hydrofoil (model 160G-4). It is therefore possible

that an afterbody of very small cross section and having no chines could of itself supply sufficient dynamic lift to be successfully used on a flying-boat hull.

The spray at the stern of model 160G-4 tended to envelop the cylindrical afterbody but was never more than two-thirds of a beam above the bottom of the afterbody. Near the hump speed, the stern of the afterbody of model 160G-5 was actually enveloped by water with the spray reaching a height of two beams above the bottom of the afterbody. This spray was evidently due to the increased load carried by the boom and probably would be reduced by moving the center of gravity forward.

None of the models tested gave any indication of directional instability in any portion of the speed range.

CONCLUSIONS

Tests with a hydrofoil on a planing-tail seaplane hull were made in NACA tank no. 2. The results of these tests indicated the following conclusions:

1. It is possible that an afterbody of very small cross section and having no chines could of itself supply sufficient dynamic lift to be successfully used on a flying-boat hull.

2. A single hydrofoil can be added to an afterbody of this type in such a manner that it will provide additional hydrodynamic lift without introducing instability. Although this additional lift would slightly reduce the load on the afterbody boom and, consequently, would reduce the height of the spray around the tail, it is doubtful that these benefits would be sufficient to warrant the use of a hydrofoil in such a manner.

Langley Memorial Aeronautical Laboratory,
National Advisory Committee for Aeronautics,
Langley Field, Va.

REFERENCES

1. Dawson, John R., and Wadlin, Kenneth L.: Preliminary Tank Tests with Planing-Tail Seaplane Hulls. NACA ARR No. 3F15, 1943.

2. Dawson, John R.: Tank Tests of Three Models of Flying-Boat Hulls of the Pointed-Step Type with Different Angles of Dead Rise - N.A.C.A. Model 35 Series. NACA TN No. 551, 1936.

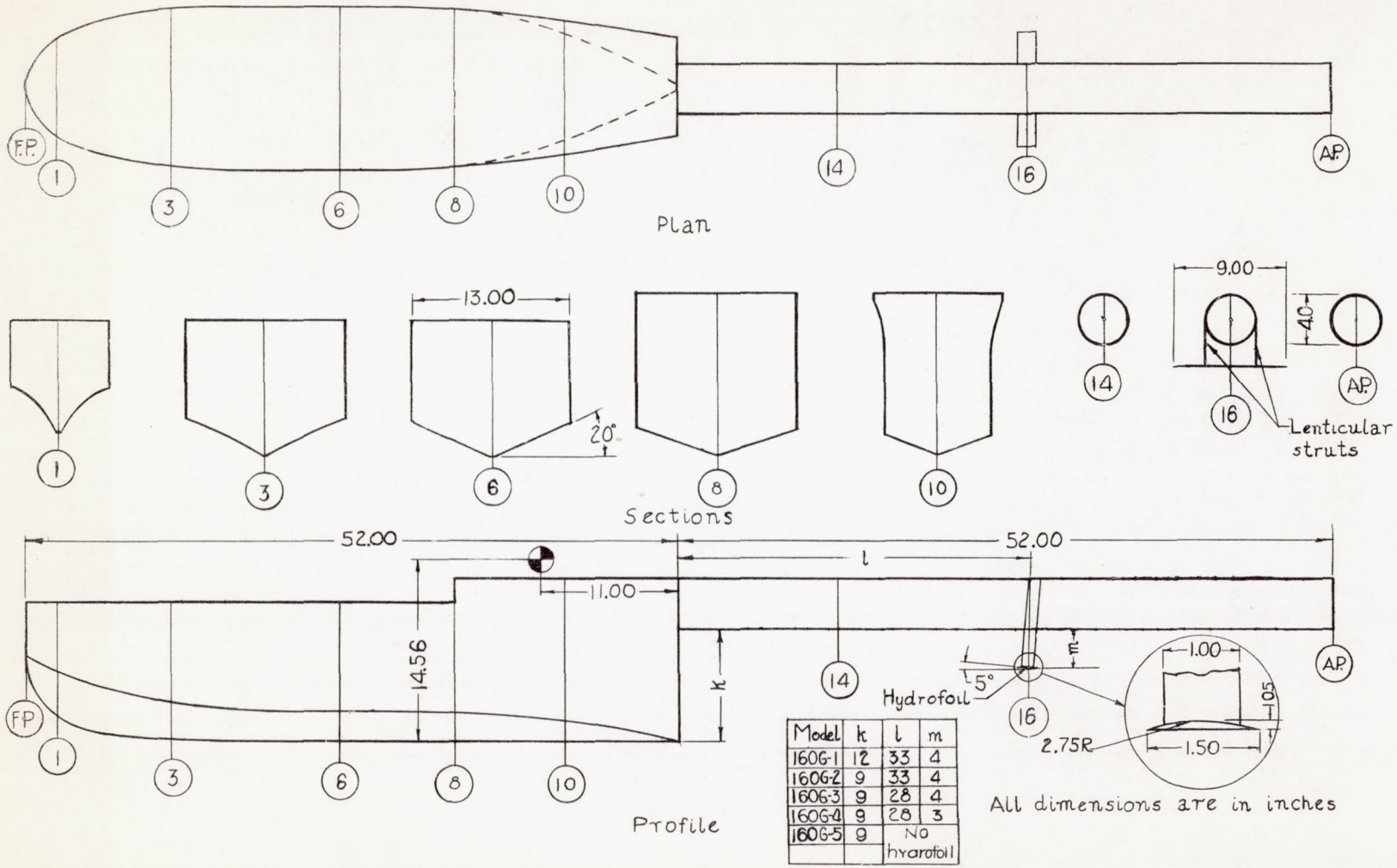

Model	k	l	m
160G-1	12	33	4
160G-2	9	33	4
160G-3	9	28	4
160G-4	9	28	3
160G-5	9	No hydrofoil	

Figure 1.- Lines of NACA model 160G series.

L-725

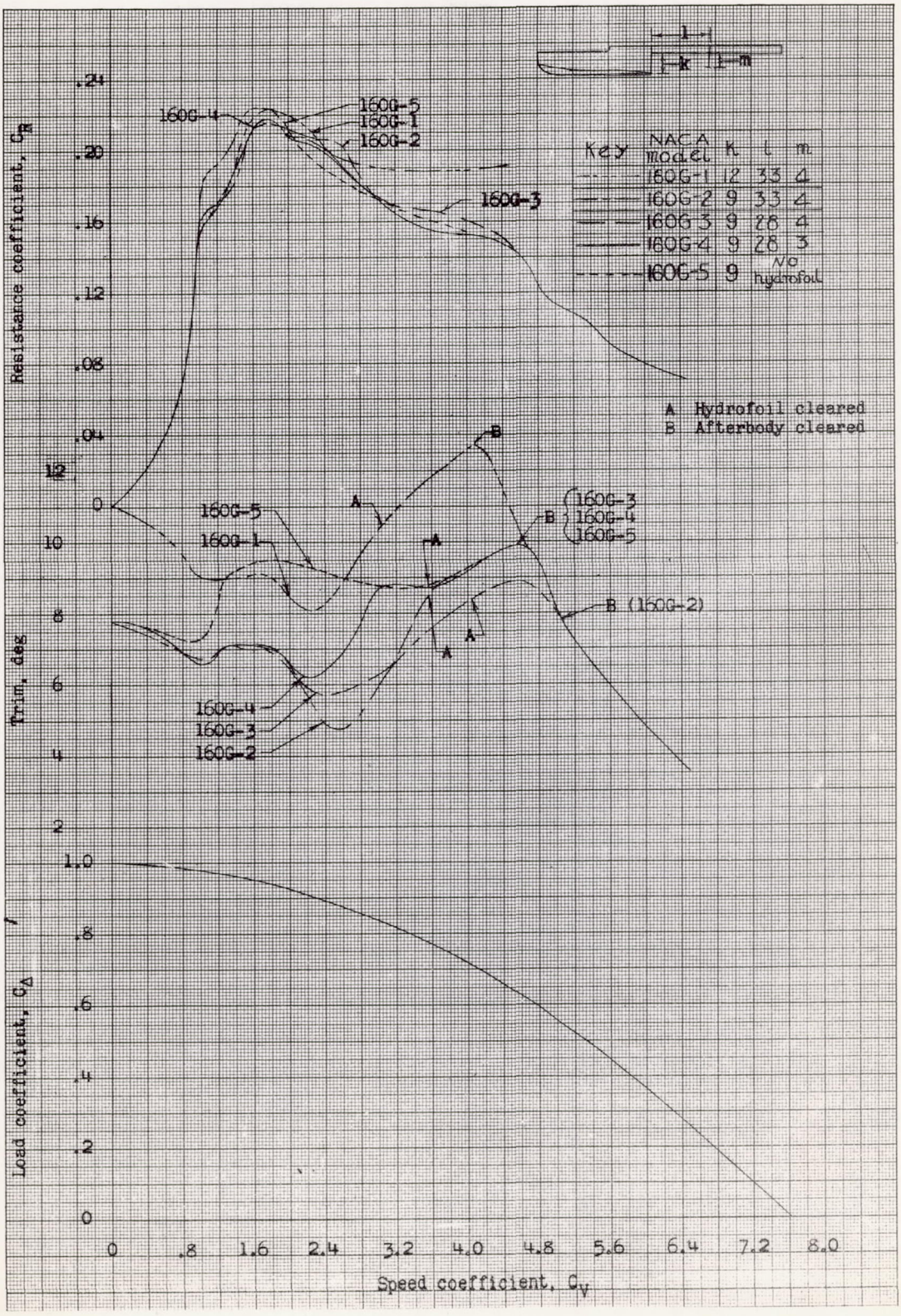

Figure 2.- Effect of varying step height and hydrofoil location on free-to-trim resistance and trim.

L725

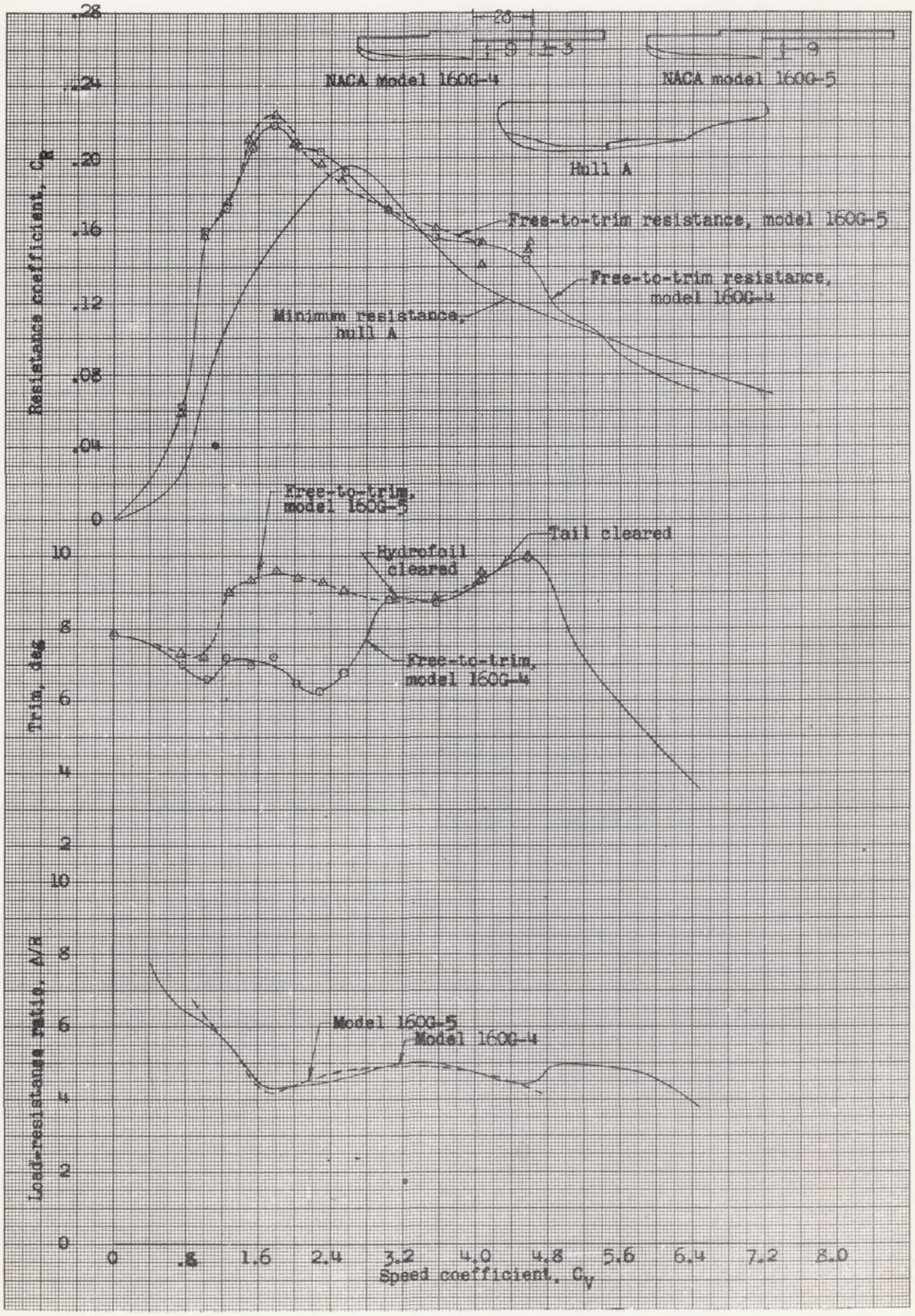

Figure 3.- Comparison of resistance characteristics of NACA models 160G-4 and 160G-5 with resistance characteristics of a conventional flying-boat hull.