FILE COPY
NO. 1-W

NATIONAL ADVISORY COMMITTEE FOR AERONAUTICS

WARTIME REPORT

ORIGINALLY ISSUED
May 1942 as
Advance Restricted Report

THE INFLUENCE OF BULKHEAD SPACING ON BENDING STRESSES DUE TO TORSION

By Paul Kuhn

Langley Memorial Aeronautical Laboratory
Langley Field, Va.

FILE COPY
To be returned to
the files of the National
Advisory Committee
for Aeronautics
Washington, D. C.

NACA

WASHINGTON

NACA WARTIME REPORTS are reprints of papers originally issued to provide rapid distribution of advance research results to an authorized group requiring them for the war effort. They were previously held under a security status but are now unclassified. Some of these reports were not technically edited. All have been reproduced without change in order to expedite general distribution.

L-501

NATIONAL ADVISORY COMMITTEE FOR AERONAUTICS

ADVANCE RESTRICTED REPORT

THE INFLUENCE OF BULKHEAD SPACING ON BENDING STRESSES DUE TO TORSION

By Paul Kuhn

SUMMARY

The reasons for the existence of bending stresses due to torsion are briefly discussed, and the theoretical formulas applying to rectangular boxes with finite bulkhead spacing are given. Tests are then described which were made to verify the theory, strains being measured on a rectangular torsion box with bulkhead spacings of 1/4, 1/2, 1, and 3 times the chord of the box. In the normal design range, the agreement between calculation and test was quite satisfactory; however, attention is called to the fact that it is difficult to predict accurately the distribution of the shear stresses in the vicinity of concentrated torque loads.

INTRODUCTION

When a shell structure is subjected to torsion, the cross sections have, in general, a tendency to warp out of their original planes. If this warping is forcibly prevented, normal or bending stresses are set up; in wing structures utilizing a rectangular box as the main strength element, these stresses may amount to more than 10 percent of the stresses caused by bending loads and consequently they cannot be neglected in design. The accompanying shift of shear stress from the wing covers to the shear webs may perhaps be even more important for design.

The first theory of bending stresses due to torsion in shells was given by Reissner (reference 1) for a box of rectangular cross section with very closely spaced bulkheads. In practice, the bulkhead spacing is frequently about equal to the chord of the box or larger; it was necessary, therefore, to develop a theory free from

the assumption of very closely spaced bulkheads, and this task was undertaken by Ebner (reference 2).

The theory of shell structures is relatively new, and the small margin of safety used in aircraft stress analysis makes it mandatory to verify all new theories by means of experiments. A preliminary attempt to verify the theory of bending stresses due to torsion (reference 3) was rather inconclusive; the agreement varied from very good to very poor. A study of the results indicated two possible reasons for the failure to achieve agreement: either some of the simplifying assumptions made in the development of the theory did not represent the physical facts closely enough, or some constructional features of the test beams did not give a sufficiently close approach to the theoretical conditions of continuity in the structure. In order to clear up the question, a new series of tests was undertaken and the results are given in this paper. The necessary theoretical formulas are also given in order to make the paper self-contained.

THEORETICAL FORMULAS

If a box beam as shown in figure 1 is subjected to equal and opposite torques T at the two ends, the walls of the box will be stressed in pure shear, and the magnitude of the shear stresses will be given by the formula

$$\tau_o = \frac{T}{2\,A_o t} \tag{1}$$

where A_o is the enclosed area bc of the box and t is the thickness of the wall under consideration. As the torque is being applied to the box, plane cross sections will not remain plane but will warp out of their original planes, as indicated in figure 1, except in special cases. If this warping is prevented by fastening the box to a rigid support as indicated in figure 2(a), longitudinal stresses will arise, which are termed "bending" stresses due to torsion, and the shear stresses will be changed from the values given by formula (1). In practical design, the equivalent of a rigid support is obtained by symmetrical loading of a symmetrical structure as indicated in figure 2(b).

L-501

The stresses caused by preventing the warping have been treated by a number of authors under the assumption that the spacing of the bulkheads is infinitely close. A method of calculation for the general case of finite spacing was given by Ebner in reference 2. Ebner assumes that the box is divided into cells by splitting the bulkheads. Each cell is subjected to a torque T and to a group of forces X (fig. 3) on each end. The groups of forces represent the restraining actions exerted by the adjoining cells on the warping of the cell under consideration. The magnitude of the unknown forces X is calculated by the theory of statically indeterminate structures.

The effects of the constraining forces are localized in the region of the root. For most practical purposes it is sufficient, therefore, to calculate these effects for the root bay under the assumption that the cross section of the box is constant along the span and equal to the cross section of the root bay. The spanwise distribution of the torque is also relatively unimportant; it is therefore permissible to use the formulas for a torque applied at the tip of the box.

Under the assumptions discussed, the magnitude of the constraining forces at the root section is given according to reference 2 by

$$X_0 = \pm \frac{\eta}{\sqrt{3\rho\left(1 + \frac{\rho}{4}\right)}} \frac{a}{bc} T \tag{2}$$

where η and ρ are auxiliary parameters defined by

$$\eta = \frac{\frac{b}{t_b} - \frac{c}{t_c}}{\frac{b}{t_b} + \frac{c}{t_c}} \tag{3}$$

$$\rho = \frac{2.67\, a^2 \frac{G}{E}}{\left(\frac{b}{t_b} + \frac{c}{t_c}\right) A_T} \tag{4}$$

In formula (4), A_T is the total area of the corner flange, which consists of the corner flange A_F proper, if present, and of the "equivalent" areas for the side walls. As far as resistance to bending is concerned, a beam of rectangular cross section with a thickness t and a depth h can be replaced by two concentrated flanges having areas of $ht/6$ each and located a distance h apart. The walls b can, therefore, be replaced by equivalent areas $bt_b/6$ located at the four corners, and the walls c can be replaced by equivalent areas $ct_c/6$ at the four corners. The total area of the equivalent corner flange is therefore

$$A_T = A_F + \frac{bt_b}{6} + \frac{ct_c}{6} \tag{5}$$

The normal stress in the corner flanges is obtained by the formula

$$\sigma = \frac{X}{A_T} \tag{6}$$

Provided the box is at least twice as long as it is wide, the values of X at the first, second, etc. bulkhead from the root are given with sufficient accuracy by the formulas

$$\left.\begin{aligned} X_1 &= X_0 e^{-\phi} \\ X_2 &= X_0 e^{-2\phi} \end{aligned}\right\} \tag{7}$$

where

$$\phi = \cosh^{-1}\left|\frac{1+\rho}{1-\frac{\rho}{2}}\right| \tag{8}$$

The sign of the stresses σ is determined most conveniently by the following rule: The stresses σ are of the same sign as the bending stresses that would occur if the walls with the smaller aspect ratio (b/t_b or c/t_c) absorbed the torque by bending action alone. In the case of a wing, this condition means normally that the stresses

L-501

are of the same sign as the stresses which would occur if the shear webs acted as two independent spars in resisting the torque. Within each bay, the spanwise variation of σ is linear.

Between bulkheads 0 and 1, the shear stress τ obtained by formula (1) is changed in wall b by an increment

$$\Delta\tau_b = -\frac{1}{2at_b}(X_0 - X_1) \tag{9a}$$

and in wall c by an increment

$$\Delta\tau_c = +\frac{1}{2at_c}(X_0 - X_1) \tag{9b}$$

the signs being valid for the usual case in which the ratio c/t_c is smaller than the ratio b/t_b. In first approximation, it may be assumed that the increments $\Delta\tau$ are distributed uniformly over their respective walls. In second approximation, the portions

$$\left.\begin{aligned} &\Delta\tau_b\left(\frac{bt_b}{6A_T}\right) \\ \text{and} \qquad & \\ &\Delta\tau_c\left(\frac{ct_c}{6A_T}\right) \end{aligned}\right\} \tag{10}$$

may be assumed to follow the familiar parabolic law of distribution of shear stresses.

The formulas for $\Delta\tau$ in any bay other than the root bay are similar to formulas (9a) and (9b); it is necessary only to substitute the values of X for the two ends of the bay. For example, between bulkheads 1 and 2 the increments of shear stress $\Delta\tau_b$ and $\Delta\tau_c$ would be given by equations (9a) and (9b) with X_1 and X_2 substituted for X_0 and X_1, respectively.

TEST OBJECT AND TEST PROCEDURE

The tests were made on a rectangular box of 24S-T aluminum alloy. The cross section of the box is shown in figure 4. A general view of the box and of the loading apparatus is shown in figure 5. The theoretical condition of a "built-in end" was obtained at the center of the box by virtue of symmetry of structure and of loading.

The arrangement of the bulkheads is shown in figure 6. For the first two cases the bulkhead spacing was not constant along the entire span; it was constant, however, over the distance within which the bending stresses due to torsion were of appreciable magnitude, as will be seen by inspection of the test results discussed later. Bulkheads no longer required after any one test were rendered inoperative by sawing them in two from the outside and drilling out the rivets connecting the bulkheads to the skin.

In order to reduce the buckling of the cover sheet, the large panels at the ends of the box were stiffened by transverse angles attached externally with Parker Kalon screws for the first two tests. For the last two tests, these angles were removed and two longitudinal angles were attached (fig. 5); since these angles were on the center lines of the sheets, they did not affect the stresses.

The strain readings were taken with Tuckerman optical strain gages of 2-inch gage length. The total gage error was estimated to average about 50 pounds per square inch, taking into account error of reading and temperature error. The error in applied load was estimated to be less than one-half of 1 percent. Readings were taken at 0, 50, 100, and 0 percent of the applied load, and repeat runs were made whenever the final zero reading differed from the initial zero reading by 100 pounds per square inch or more.

TEST RESULTS

Normal stresses.- A chordwise plot of longitudinal strains measured in the first test (bulkhead spacing, 7 in.) is shown in figure 7. It will be seen that the strains follow a pronounced curve instead of the straight-

L-501

line law which forms the basis of the engineering theory of bending. The strains shown in figure 7 were measured at the two stations 3¾ inches from the root. At stations farther away from the root, the shape of the curves is similar but, due to the lower intensities of the stresses, the curves become more irregular.

By integration of several curves such as shown in figure 7, it was found that the equivalent flange area may be as low as $bt_b/8$ instead of the theoretical $bt_b/6$, which is valid for straight-line distribution of the stresses. The difference between these two values is 25 percent. The maximum bending stress due to torsion, however, is approximately proportional to the square root of the area A_T; the change from $bt_b/6$ to $bt_b/8$ would, therefore, cause only about a 12-percent change in the stress σ. This percentage of change is further reduced by the fact that the equivalent area for the wall b constitutes only a part of the total area A_T. The deviation from the straight-line law may become relatively more important, however, when the cover has stiffeners attached to it, because the stiffeners may furnish the largest contributions to the area A_T. The question is a part of the general problem of shear-lag but has received only passing attention by various authors in the past.

The longitudinal stresses at the four corners of the box were measured by placing Tuckerman gages on the cover sheet directly beside the flat dural strips. The location of the gages thus determined was 13.75 inches from the center line of the sheet, and the corners of the box were 14.08 inches from the center line; the gage readings were therefore multiplied by 14.08/13.75 for comparison with the calculated flange stresses. A typical set-up of strain gages is shown in figure 5.

The experimental stresses σ are shown in figures 8 to 11 together with the calculated stresses. The agreement is satisfactory in general. In the immediate vicinity of the root, the experimental stresses are somewhat higher than the calculated stresses; the absolute magnitude of this discrepancy is roughly the same for all tests and consequently the percentage of error is quite large for the last test because the stresses are small.

The shear stresses at the two stations $3\frac{3}{4}$ inches from the root are shown in figure 12. These stresses were computed from strain rosette measurements taken at angles of 0°, 45°, and 90° with the axis of the box. Of practical interest is the high shear stress in the shear webs c. The excess of the experimental shear stress over the computed shear stress in the webs is presumably caused by introducing the torque by means of forces acting on the two webs; the bulkhead is not quite equal to the task of distributing the torque immediately to the four sides of the box, so that the webs have more than their share of the load while the cover sheets have less than their share. The quantitative agreement between the excess stress in the web and the corresponding deficiency in the cover sheets on a percentage basis is very poor; it is possible that the strain measurements in the web were falsified by buckling due to the vicinity of the torque reactions.

The shear stresses at the two stations located 24.5 inches from the root are shown in figure 13. At this distance from the root, the effect of the constraining forces is quite small (fig. 8); as a result, the shear stresses are nearly equal to the basic value τ_0 given by equation (1). The figure indicates one peculiarity that is not explained by the theory: The stresses in the cover sheet increase as the corners are approached and reach the same values as the shear stresses in the webs. A similar, although less pronounced, increase of shear stress near the corners was observed in a larger box with stiffened cover tested for a different purpose.

Measurements were also made of the shear stress in the two end bulkheads with a bulkhead spacing of 7 inches. The experimental stresses were about 70 percent of the calculated stresses, indicating either that the torque was not fully distributed by the end bulkhead or that part of the torque was transmitted by the angles around the bulkhead acting as bents, or both.

CONCLUSIONS

If a rectangular torsion box with bulkheads spaced at finite distances has a built-in root section, the normal stresses and the shear stresses caused by the constraint at the root can be calculated by Ebner's formulas with an accuracy sufficient for most practical purposes.

L-501

The theory tends to be slightly on the unconservative side, particularly in the immediate vicinity of the root. Part of the discrepancy can be traced to a nonlinear distribution of the bending stresses; this factor may require attention when the cover consists of stiffeners and thin skin.

Special allowances must be made on the shear stresses at stations where concentrated torques are introduced, because it will not be possible in many cases to predict very closely the efficiency of the bulkhead in distributing the load around the periphery of the box.

Langley Memorial Aeronautical Laboratory,
National Advisory Committee for Aeronautics,
Langley Field, Va.

REFERENCES

1. Reissner, H.: Neuere Probleme aus der Flugzeugstatik. Z.F.M., Jahrg. 17, Heft 18, 28. Sept. 1926, pp. 384-393 and Jahrg. 18, Heft 7, 14. April 1927, pp. 153-158.

2. Ebner, Hans: Torsional Stresses in Box Beams with Cross Sections Partially Restrained against Warping. T.M. No. 744, NACA, 1934.

3. Kuhn, Paul: Bending Stresses Due to Torsion in Cantilever Box Beams. T.N. No. 530, NACA, 1935.

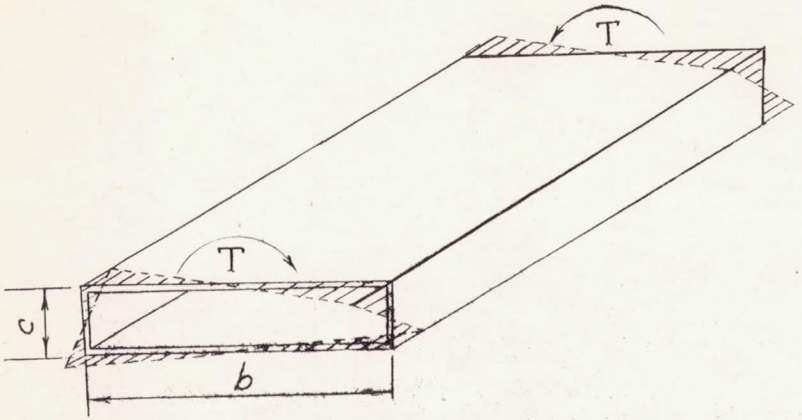

Figure 1.- Free torsion box.

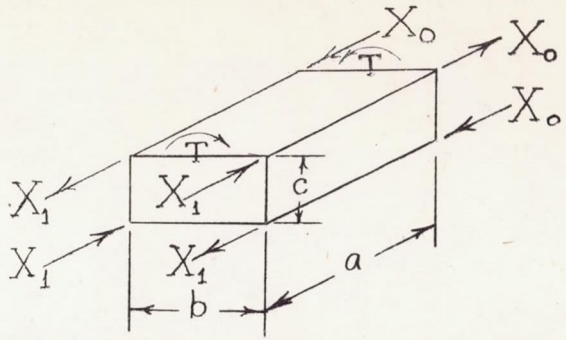

Figure 3.- Free-body diagram of root cell.

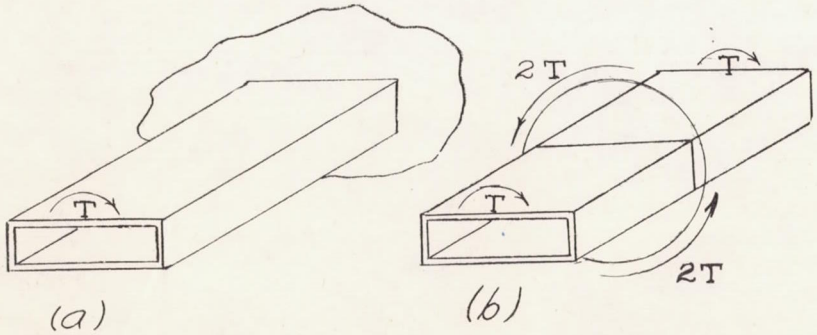

Figure 2.- Torsion box with built-in end.

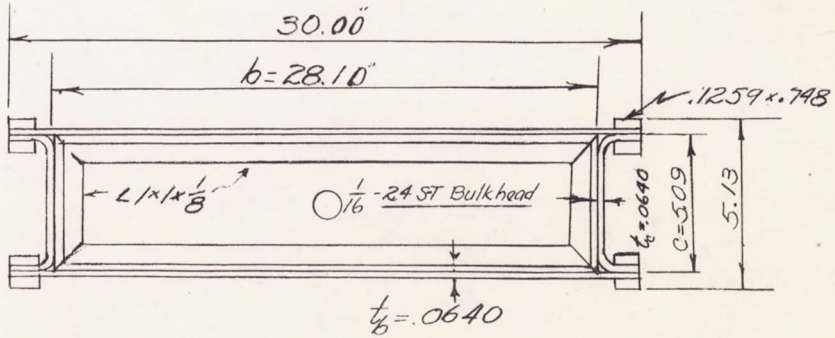

Figure 4.- Cross section of box.

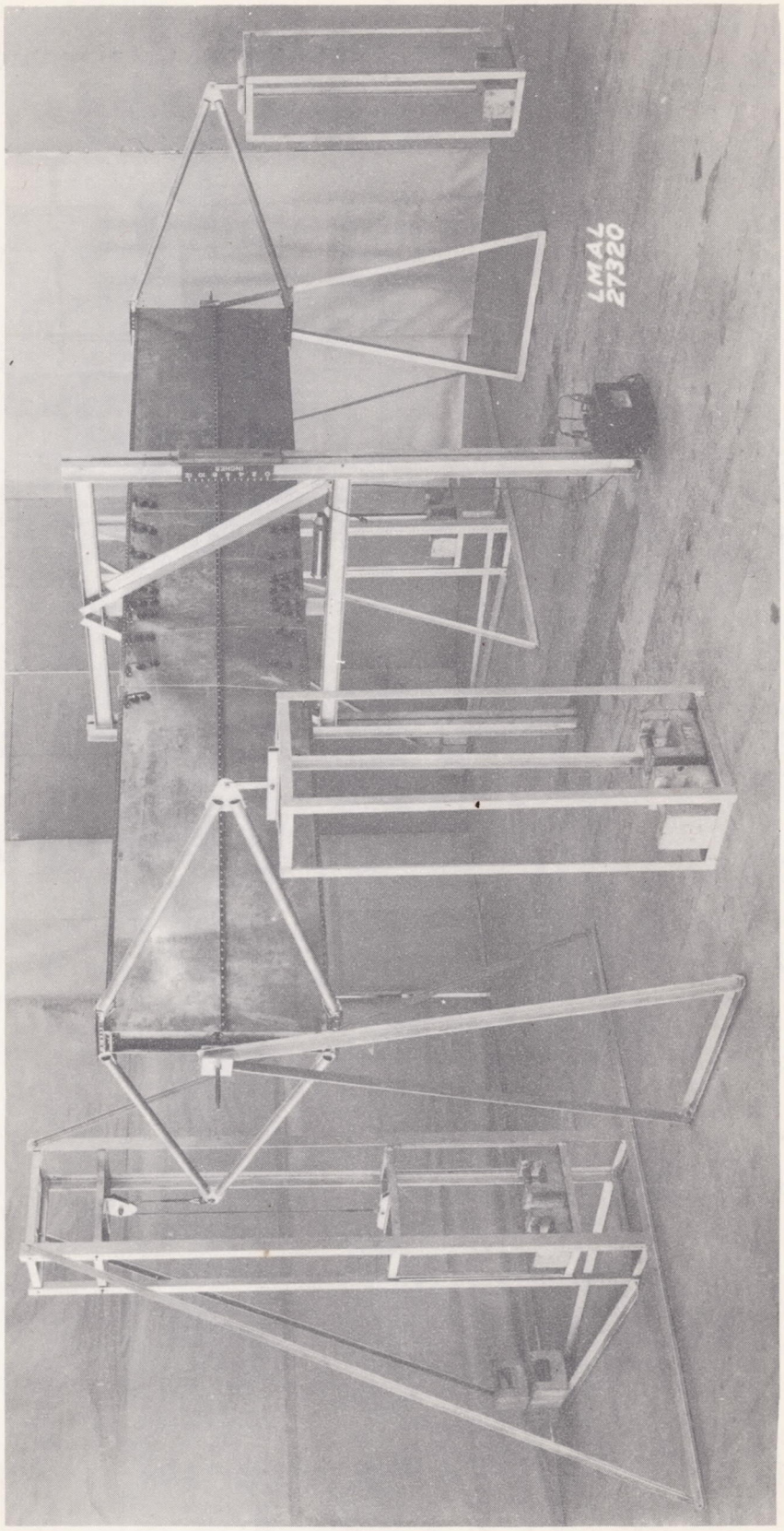

Figure 5.- Test set-up.

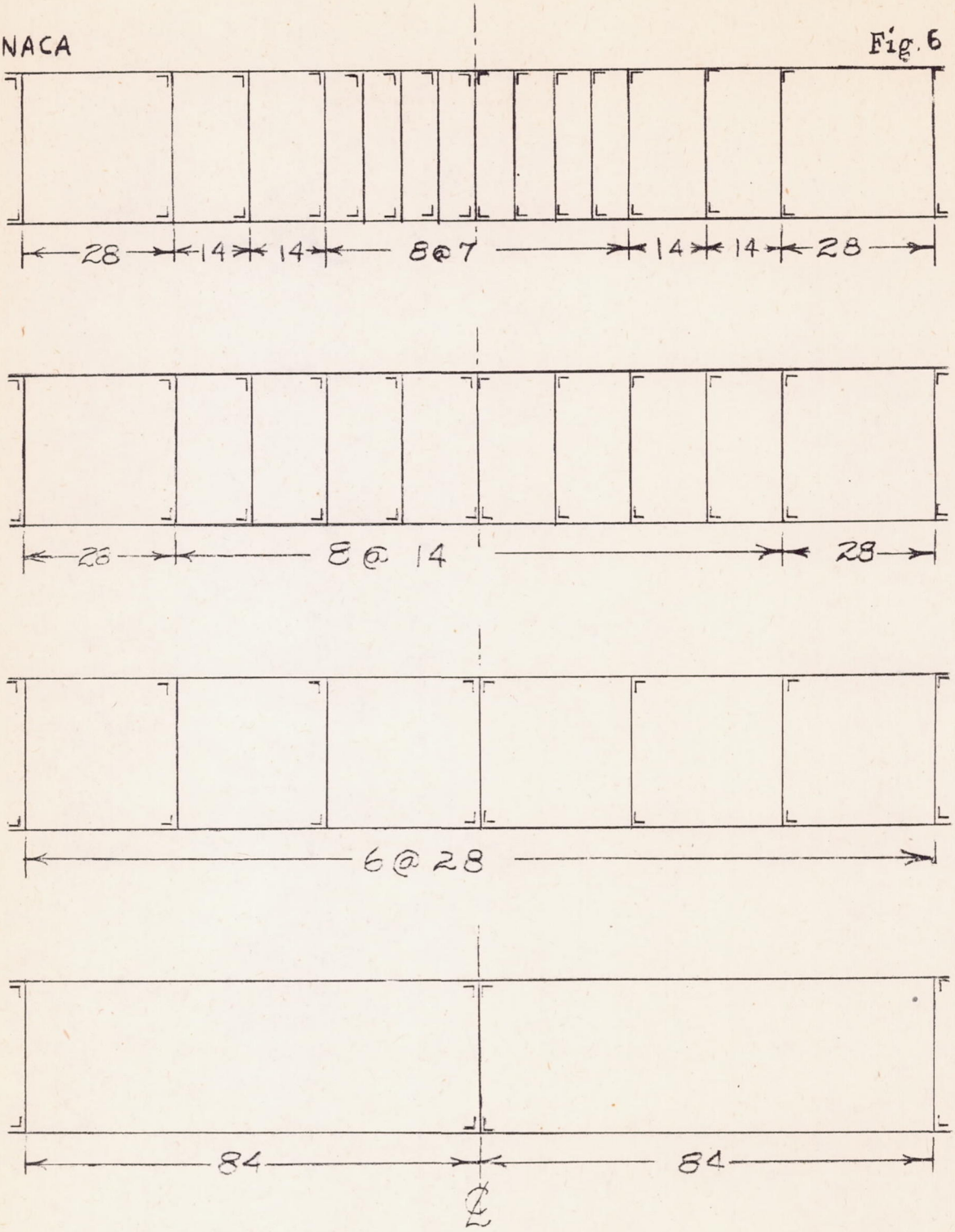

Figure 6.- Arrangement of bulkheads for four tests.

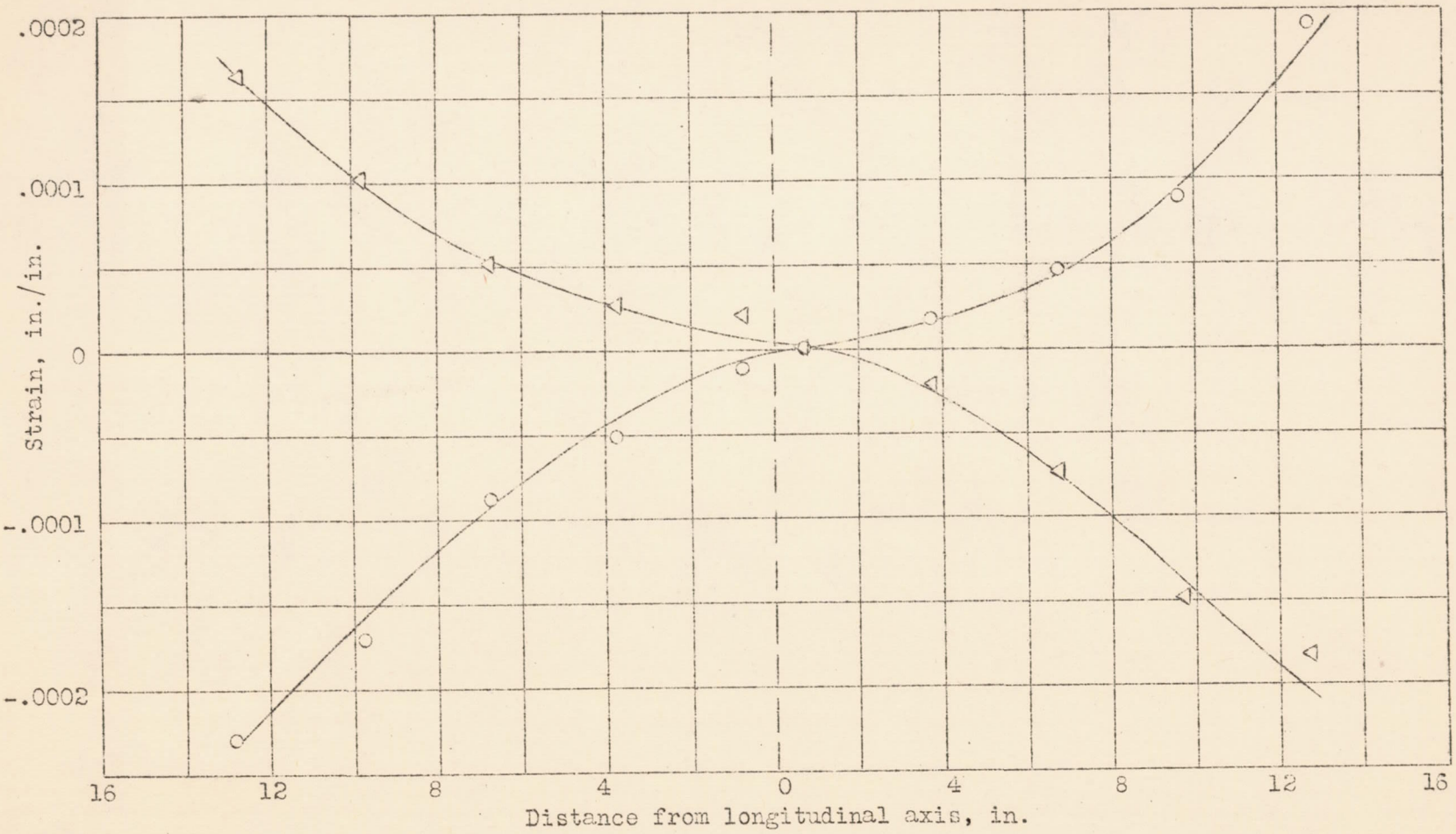

Figure 7.- Chordwise distribution of strains parallel to axis of beam at two stations $3\frac{3}{4}$ inches from root. Bulkhead spacing, 7 inches; T = 40,000 inch-pounds.

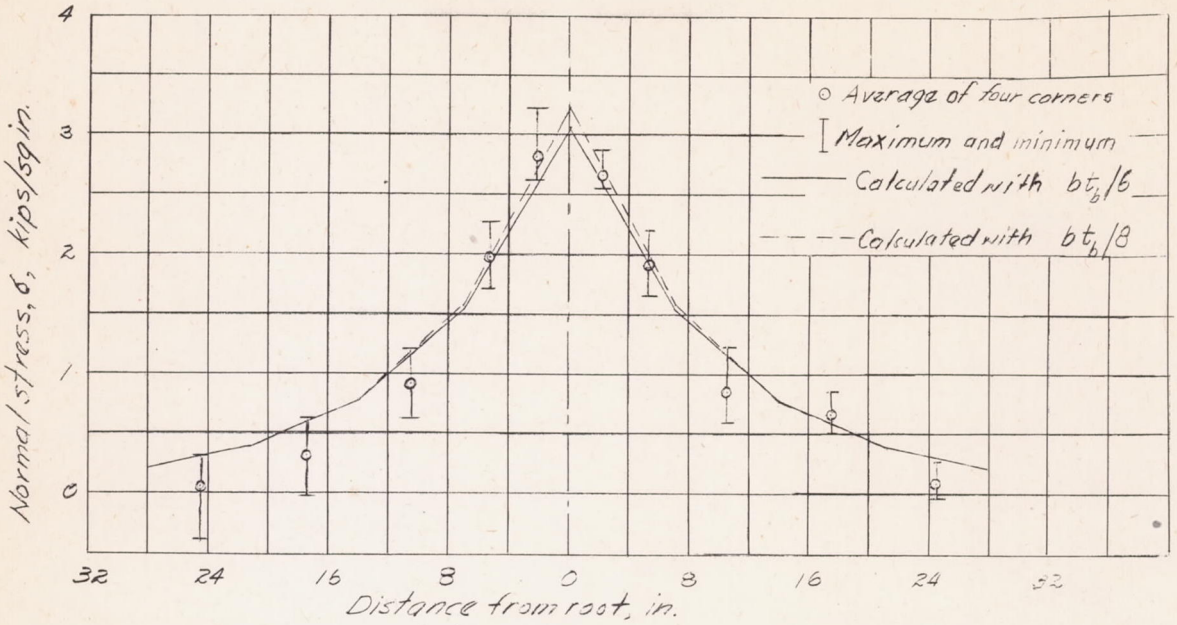

Figure 8.- Stresses in corner flanges with bulkhead spacing of 7 inches. T = 40,000 inch-pounds.

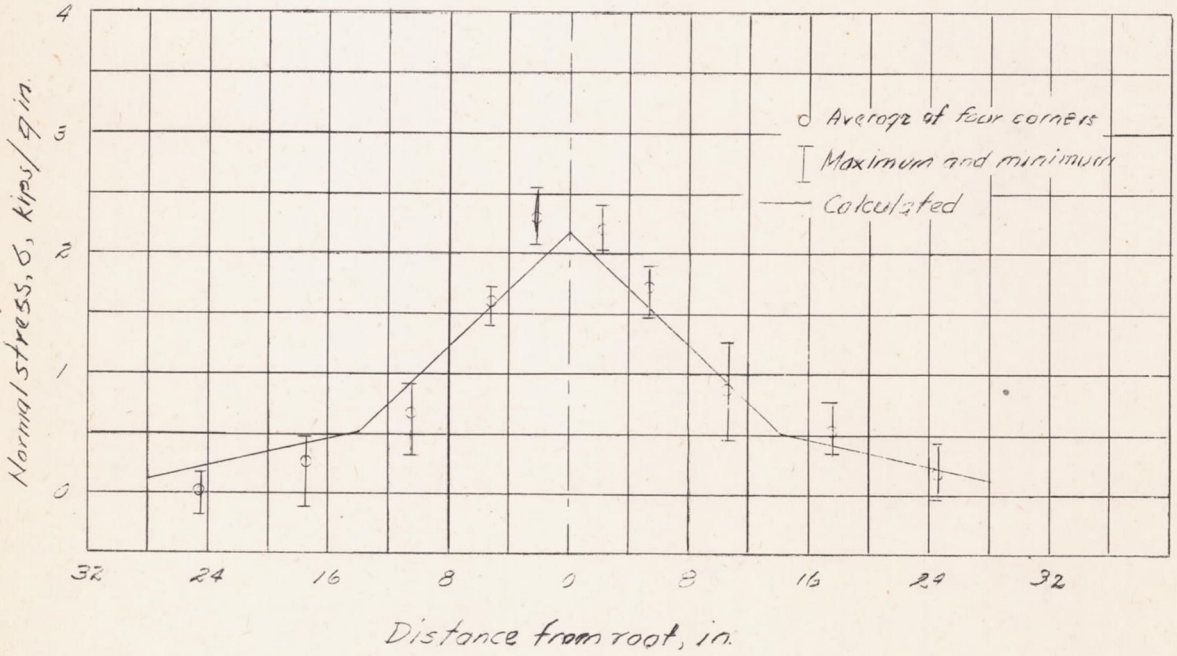

Figure 9 - Stresses in corner flanges with bulkhead spacing of 14 inches. T = 30,000 inch-pounds.

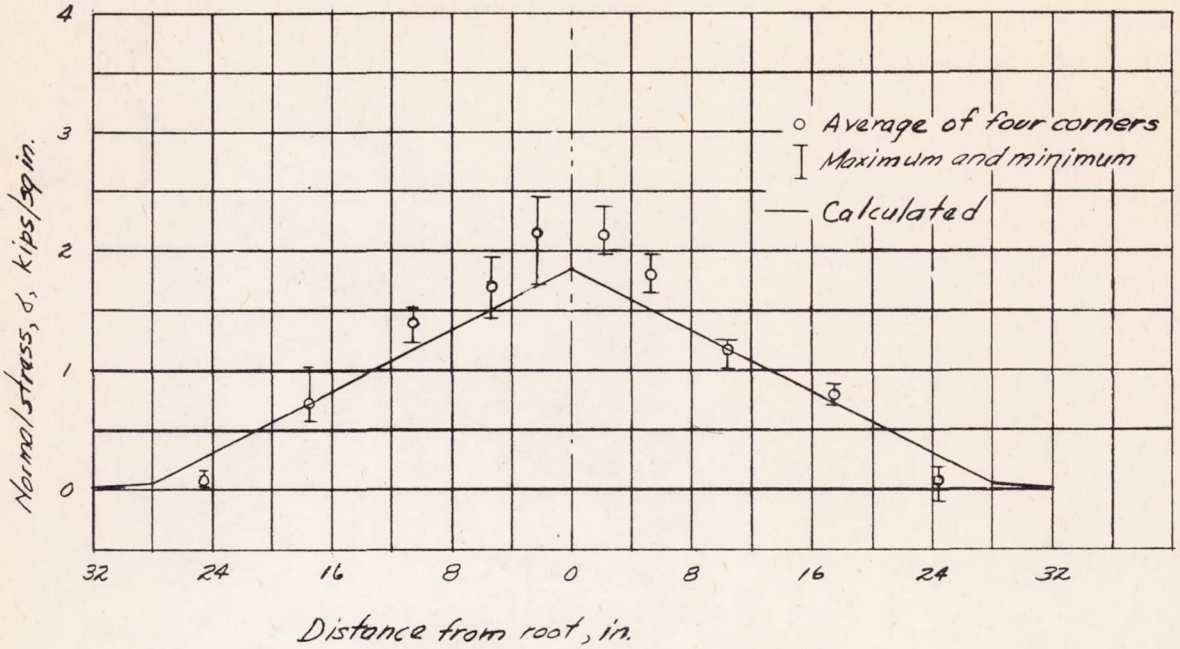

Figure 10.- Stresses in corner flanges with bulkhead spacing of 28 inches. T = 30,000 inch-pounds.

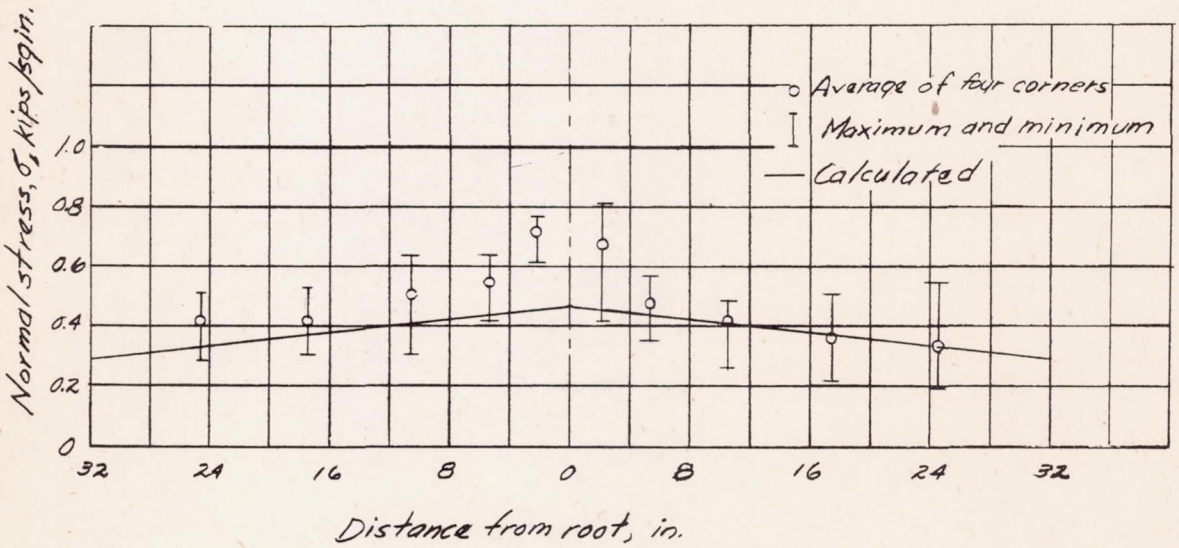

Figure 11.- Stresses in corner flanges with bulkhead spacing of 84 inches. T = 15,000 inch-pounds.

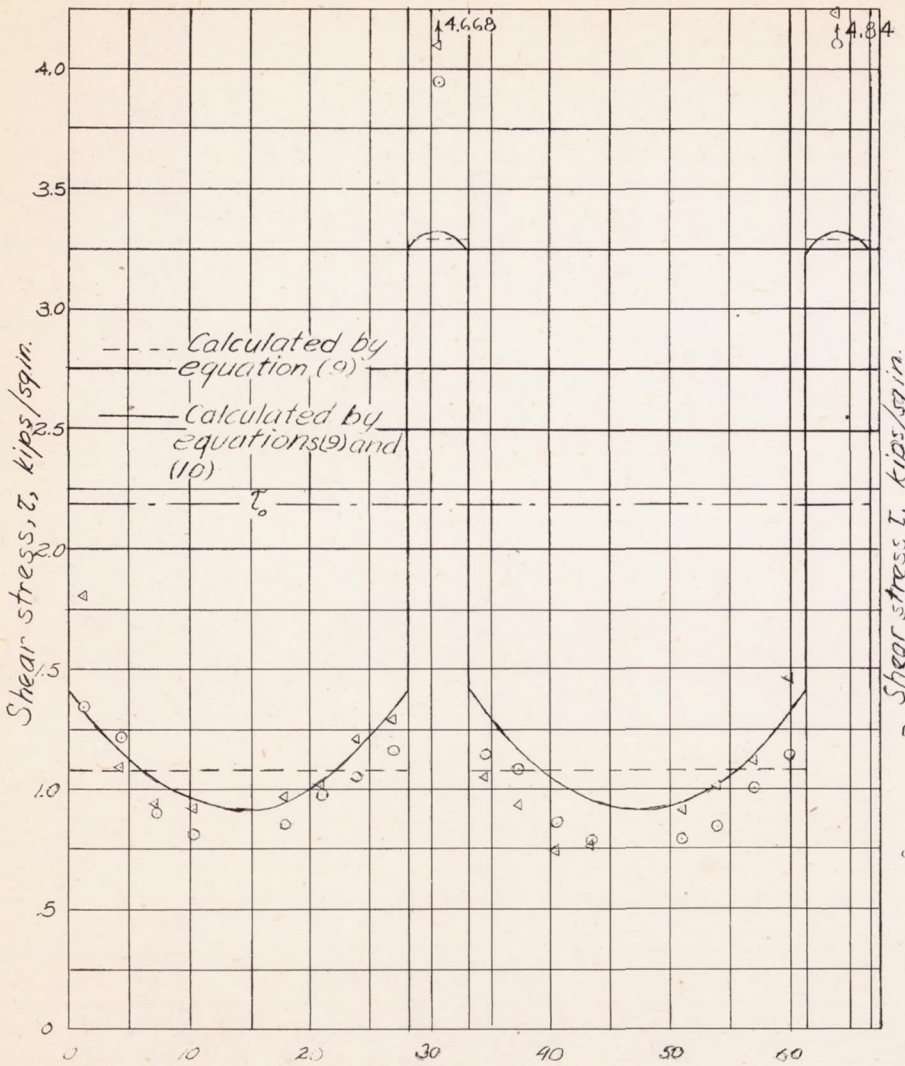

Figure 12 - Shear stresses at two stations $3\frac{3}{4}$ inches from root, Bulkhead spacing, 7 inches; T=40 000 inch-pounds.

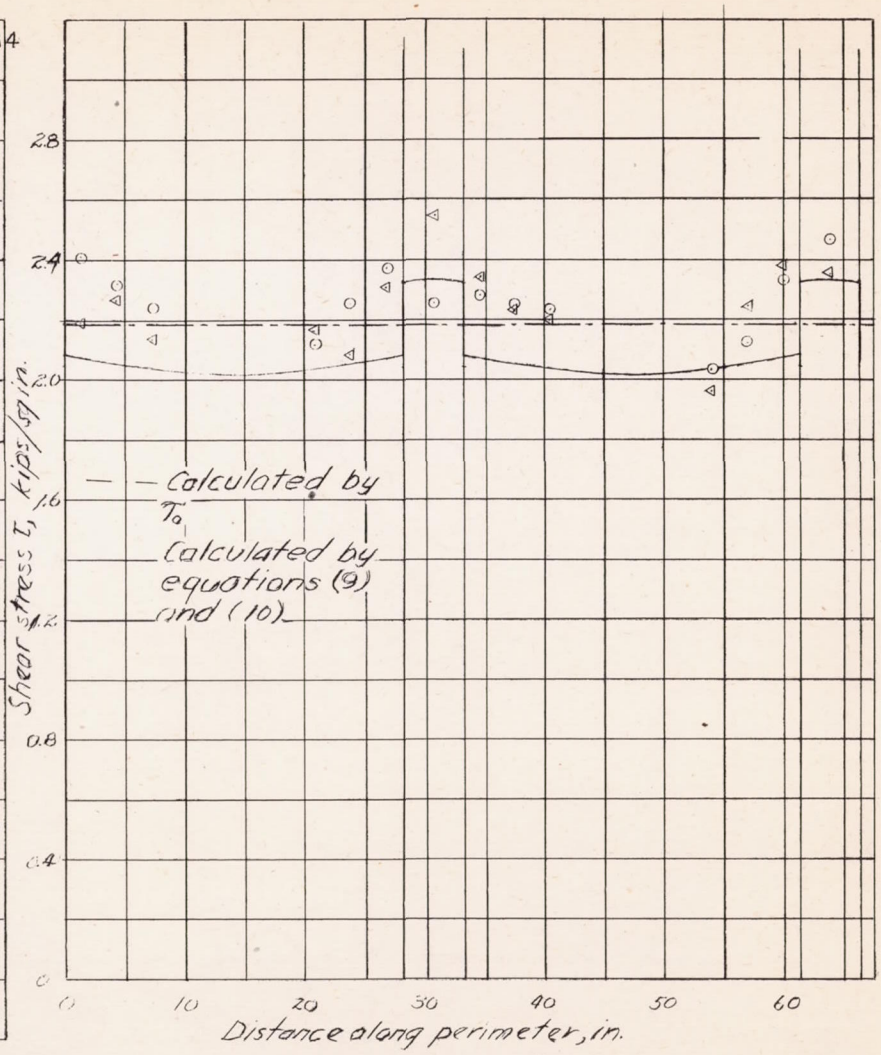

Figure 13 - Shear stresses at two stations $24\frac{1}{2}$ inches from root Bulkhead spacing, 7 inches; T= 40,000 inch pounds.