E-5

NATIONAL ADVISORY COMMITTEE FOR AERONAUTICS

WARTIME REPORT

ORIGINALLY ISSUED

December 1944 as
Advance Confidential Report E4L21

PERFORMANCE OF NACA EIGHT-STAGE AXIAL-FLOW COMPRESSOR AT SIMULATED ALTITUDES

By J. Austin King and Owen W. Regan

Aircraft Engine Research Laboratory
Cleveland, Ohio

WASHINGTON

NACA WARTIME REPORTS are reprints of papers originally issued to provide rapid distribution of advance research results to an authorized group requiring them for the war effort. They were previously held under a security status but are now unclassified. Some of these reports were not technically edited. All have been reproduced without change in order to expedite general distribution.

NATIONAL ADVISORY COMMITTEE FOR AERONAUTICS

ADVANCE CONFIDENTIAL REPORT

PERFORMANCE OF NACA EIGHT-STAGE AXIAL-FLOW COMPRESSOR AT SIMULATED ALTITUDES

By J. Austin King and Owen W. Regan

SUMMARY

An investigation has been conducted by the NACA to determine the design-performance characteristics of the NACA eight-stage axial-flow compressor and the effect of altitude on the performance. The compressor was tested at simulated altitudes of 50,000; 36,000; and 27,000 feet at rotor speeds corresponding to compressor Mach numbers of 0.80, 0.85, 0.90, and 0.95 with varying air flow at each speed.

The design pressure ratio of 5:1 was obtained at an adiabatic temperature-rise efficiency of 83 percent, a simulated altitude of 36,000 feet, and a compressor Mach number of 0.95. An appreciable Reynolds number effect was shown by the decrease of 4 points in efficiency at a Mach number of 0.80 for an increase in simulated altitude from 27,000 to 50,000 feet.

INTRODUCTION

The NACA eight-stage axial-flow compressor was constructed in order to determine the performance characteristics of a multistage axial-flow compressor based on aerodynamic principles. The preliminary investigation at the Langley Field laboratory consisted of performance tests at approximately sea-level outlet pressure and rotor speeds from 5,000 to 14,000 rpm, heat-transfer tests with the compressor lagged, and parameter tests to establish the most suitable method of presenting data. Although the estimated high efficiency was obtained, the performance at design conditions was not determined because of blade failure. A discussion of the test results, a bibliographical treatment of research on axial-flow compressors, the theory of design and operation of the compressor including the velocity diagrams on which the design was based, and the mechanical construction of the compressor are presented in reference 1.

The investigation of the NACA axial-flow compressor was continued at the Cleveland laboratory in 1944 with the dual objective of determining the design-performance characteristics and the effect of altitude, or Reynolds number, on the performance. The stator blades are of the original design but the rotor blades had been redesigned for improved strength. Altitudes of 50,000; 36,000; and 27,000 feet were simulated by means of refrigerated air and altitude exhaust; the range of rotor speeds corresponded to compressor Mach numbers from 0.80 to 0.95.

APPARATUS AND TESTS

NACA axial-flow compressor. - The essential mechanical features of the NACA eight-stage axial-flow compressor are shown in figures 1 to 3. Failure of the original rotor blades necessitated the following alterations that, though aerodynamically undesirable, would increase the operating life of the blades by improving the strength characteristics:

1. A semicircular fillet was cut at the point where the blade overhang joins the base.

2. The under side of the blade base of the three longest rows (first three) was designed to fair in the circular threaded section with the projected blade profile.

3. The blade thickness was tapered from hub to tip.

4. The fillet at the root of the blade was increased from 0.015 inch for small blades and from 0.025 inch for large blades to 0.090-inch radius for all rotor blades.

Figure 4 shows the typical construction of the redesigned rotor blades; the shaping of the under side of the blades of the first three rows (fig. 4(a)) might have been desirable for all rotor blades but the shorter blades (fig. 4(b)) have less stress at the root. The extension on the end of the threaded shank was designed as a friction lock on the original blades but was retained in the present design of the shorter blades only for dynamic balance. In order to eliminate any possibility of blade turning, which may have caused the previous failure, all blades were secured in the rotor by firm-fitting threads and spot-peening of the mating blade-base and rotor surfaces.

At the mean span of the rotor blades, the blade section in the new design is identical to the original design. (See table 1, reference 1.) The mean camber line and the chord length are the same at all radii but the thickness is varied linearly from hub to tip.

The thickness of the blades in the first two rotor rows varies from 12 percent of the chord at the hub to 6 percent at the tip. On the other rotor blades the rate of taper - that is, the change in percentage thickness per unit length along the span - is the same as for the second rotor row. For any given section, the thickness is changed by the same proportion at all points along the mean camber line. The chord length of the blades in the first four rows is 1.350 inches and in the last four rows, 1.013 inches.

Test setup. - The general arrangement of the compressor test setup is shown in figure 5. The compressor was driven through a cradled gearbox by two 300-horsepower dynamometers connected in tandem. A central system supplied refrigerated air to the compressor; the inlet-air temperature was automatically controlled. The air flowed through an inlet duct into a depression tank 4 feet in diameter and 6 feet long immediately ahead of the compressor. A Bailey adjustable orifice and a submerged VDI standard orifice 9 inches in diameter were located in the inlet duct. The depression tank was fitted with a screen, felt filter, and honeycomb straightening vanes to insure an air stream free of foreign particles and of uniform velocity at the compressor entrance. The air discharged from the compressor flowed through an 8-inch duct and was exhausted into the central altitude-exhaust system. Air flow was regulated by electrically operated throttles in the inlet and the outlet ducts. The ducts, the depression tank, and the compressor were insulated with a 6-inch layer of felt.

Independent lubricating systems were used for the front and the rear bearings. Suction was applied to the low-pressure side of the oil systems to prevent oil from being forced into the air stream. Pressure-actuated switches were used to cut off the dynamometer power supply and prevent operation of the setup with insufficient oil pressure. The power supply was also automatically cut off when predetermined limiting bearing temperatures were encountered.

Instrumentation. - Pressure and temperature measurements were made in accordance with the recommendations of references 2 and 3. Figure 6 shows the location of the various measuring stations. The air temperatures at the Bailey adjustable orifice and the inlet temperatures in the depression tank were measured with iron-constantan thermocouples. The three thermocouples in the tank were placed near the walls 180° apart and at the center. At the VDI orifice and in the discharge duct, iron-constantan thermocouples mounted in axial-vent temperature probes were used. The two probes in the outlet duct were arranged diametrically opposite. The cold junctions of all thermocouples were placed in an ice bath to maintain a cold-junction temperature equal to that at which the thermocouples had been calibrated. A calibrated potentiometer was used to measure the difference in potential between the hot and the cold junctions.

Mercury manometers were used to measure all pressures except the pressure drop at the orifices. A water manometer was used at the Bailey orifice; and a water micromanometer was used at the VDI orifice because of the slight change in pressure drop with change in air flow. Only static pressures were measured in the depression tank because the velocity pressure was negligible. Compressor speed was manually controlled and was periodically checked with a Chrono-Tachometer.

Tests. - The tests were begun with a single 300-horsepower dynamometer driving unit. Because of this power limitation the initial tests were run at inlet conditions approximating conditions at 50,000 feet (3.44 in. Hg and -67° F). The tests were run at compressor Mach numbers from 0.80 to 1.0; only one point was obtained at a compressor Mach number of 1.0, however, because of power limitation. Tests were then made at a simulated altitude of 36,000 feet but at compressor Mach numbers lower than 1.0. A large Reynolds number effect was indicated but, owing to the difficulty in maintaining a constant inlet pressure, the data were scattered at all speeds.

The tests at 36,000 feet were resumed with an additional 300-horsepower dynamometer but were again interrupted when the mercury in the manometer board was sucked through the compressor. An investigation revealed that the leading edges of the third, the seventh, and the eighth stages of the rotor blades had been damaged. The edges were smoothed by hand and traps were installed on the manometer board to prevent another such occurrence. When the compressor was disassembled, it was also found that the thrust bearing had worn and had allowed the rotor to move forward. The ends of the stator blades of the second row had scraped the rotor because of the taper of the rotor. Although all the stator blades of this row were scraped, the rotor showed signs of contact only on one side, which indicated that a critical speed had been encountered. From subsequent vibration tests it was found that the critical rotor speed was in a range from 15,000 to 21,000 rpm, which included the design speed.

Tests with the reassembled compressor were made at compressor Mach numbers of 0.80, 0.85, 0.90, and 0.95 at a simulated altitude of 36,000 feet; at compressor Mach numbers of 0.80, 0.85, and 0.90 at a simulated altitude of 50,000 feet; and at a compressor Mach number of 0.80 at a simulated altitude of 27,000 feet. No data were taken at a compressor Mach number of 0.95 and altitude of 50,000 feet because the bearing lubricating oil was sucked through the compressor. At an altitude of 27,000 feet, only a compressor Mach number of 0.80 was run because of power limitations.

RESULTS AND DISCUSSION

The adiabatic temperature-rise efficiencies η_T and pressure ratios p_{3_T}/p_{1_T} and p_{2_T}/p_{1_T} are based on total-pressure measurements either in the outlet pipe p_{3_T} or after the last row of stator blades p_{2_T}. The temperature rise between the inlet depression tank and the outlet pipe was used in determining the efficiencies for both total-pressure measurements. The performance characteristics are presented as functions of the volume flow (cu ft/min) corrected to NACA standard sea-level temperature, $60\ Q_1/\sqrt{\theta}$

where

Q_1 inlet volume flow, cubic feet per second

θ ratio of absolute inlet-air temperature to standard sea-level absolute temperature

The performance characteristics shown in figure 7 were obtained from pressures taken in the inlet depression tank and at the exit of the last row of stator blades. At 36,000 feet and a compressor Mach number of 0.95, the design pressure ratio of 5:1 was reached with a peak efficiency of 83 percent at this speed. The highest efficiency obtained in the tests was slightly more than 85 percent at 27,000 feet. The Mach number at which the compressor operates most efficiently is between 0.85 and 0.90.

The curves of figure 7 show an appreciable Reynolds number effect on the compressor performance; at a compressor Mach number of 0.80 the peak efficiency was 81 percent at 50,000 feet, 83 percent at 36,000 feet, and 85 percent at 27,000 feet. The Reynolds number for which a particular compressor stage should be designed cannot be determined from these over-all results because the Reynolds number varies from stage to stage. Calculations show that the average Reynolds number across the compressor blading is approximately 50,000 at 50,000 feet; 100,000 at 36,000 feet; and 150,000 at 27,000 feet.

The pressure distribution through the compressor at the point nearest the design pressure ratio of 5:1 at 36,000 feet and a compressor Mach number of 0.95 is shown in figure 8. The last stages of the compressor are operating more effectively and giving a better pressure distribution at the design point than was obtained at the low speeds in previous tests. (See fig. 9 of reference 1.)

Figure 9 shows the compressor characteristics obtained from measurements in the inlet tank and the outlet pipe, which include the losses in the scroll collector. The loss in efficiency due to the scroll is about 4 points.

The effect of the damage done by the mercury may be seen in figure 10. Because the leading edges of the blades had been damaged, the efficiency was decreased about 1 point and the flow was also slightly decreased. These curves are based on measurements in the outlet pipe at altitude conditions of 36,000 feet.

With new blades and at Reynolds numbers encountered at sea-level conditions the efficiency of the compressor based on measurements in the outlet pipe would probably be about 84 percent; the peak efficiency reported in reference 1 was 87 percent at an inlet-air temperature of approximately 50° F and pressure of approximately 10 inches of mercury. The operating differences that may account for the differences in performance obtained in the present tests and those of reference 1 may be the changes in rotor-blade design, lagging of the compressor in the present tests (or heat-transfer effect), Reynolds number effect, and possible error in measurements due to nonuniform inlet-air temperatures in the tests of reference 1.

In general, the compressor handled a somewhat smaller quantity of air at a slightly higher pressure ratio than that for which it was designed. This discrepancy is probably due to the fact that the design on which the compressor was based was new and, therefore, some of the initial assumptions as to losses from blade tip clearances, size of root fillets, wall friction, and blade interference were slightly in error.

The redesigned blades proved highly satisfactory as to strength requirements. At the termination of this investigation, the compressor had been run about 550 hours over a large range of speeds, temperatures, pressures, and loads, and no stress or fatigue trouble had been encountered.

CONCLUSIONS

1. The NACA eight-stage axial-flow compressor attained the design pressure ratio of 5:1 at an adiabatic temperature-rise efficiency of 83 percent, demonstrating that axial-flow compressors of high efficiency with a much higher pressure ratio per stage than had previously been obtained can be designed by the use of proper velocity diagrams and present airfoil theory.

2. The effect of Reynolds number on compressor performance is larger than had been generally assumed; an increase in simulated altitude from 27,000 feet to 50,000 feet resulted in a drop of 4 points in efficiency.

Aircraft Engine Research Laboratory,
National Advisory Committee for Aeronautics,
Cleveland, Ohio.

REFERENCES

1. Sinnette, John T., Jr., Schey, Oscar W., and King, J. Austin: Performance of NACA Eight-Stage Axial-Flow Compressor Designed on the Basis of Airfoil Theory. NACA ACR No. E4H18, 1944.

2. NACA Subcommittee on Supercharger Compressors: Standard Procedures for Rating and Testing Centrifugal Compressors. NACA ARR No. E5F13, 1945.

3. Ellerbrock, Herman H., Jr., and Goldstein, Arthur W.: Principles and Methods of Rating and Testing Centrifugal Superchargers. NACA ARR, Feb. 1942.

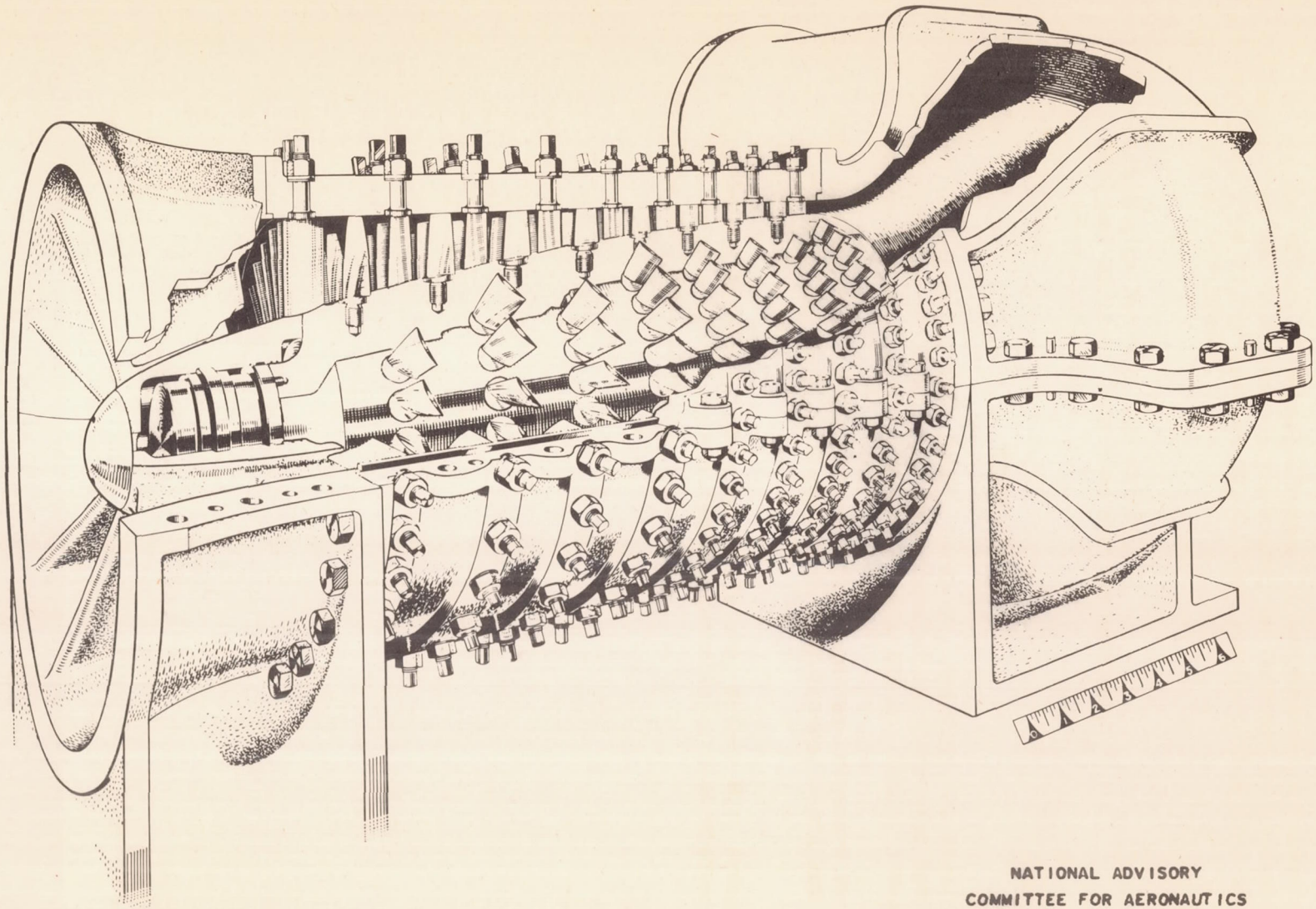

NATIONAL ADVISORY
COMMITTEE FOR AERONAUTICS

Figure 1.– NACA eight-stage axial-flow compressor.

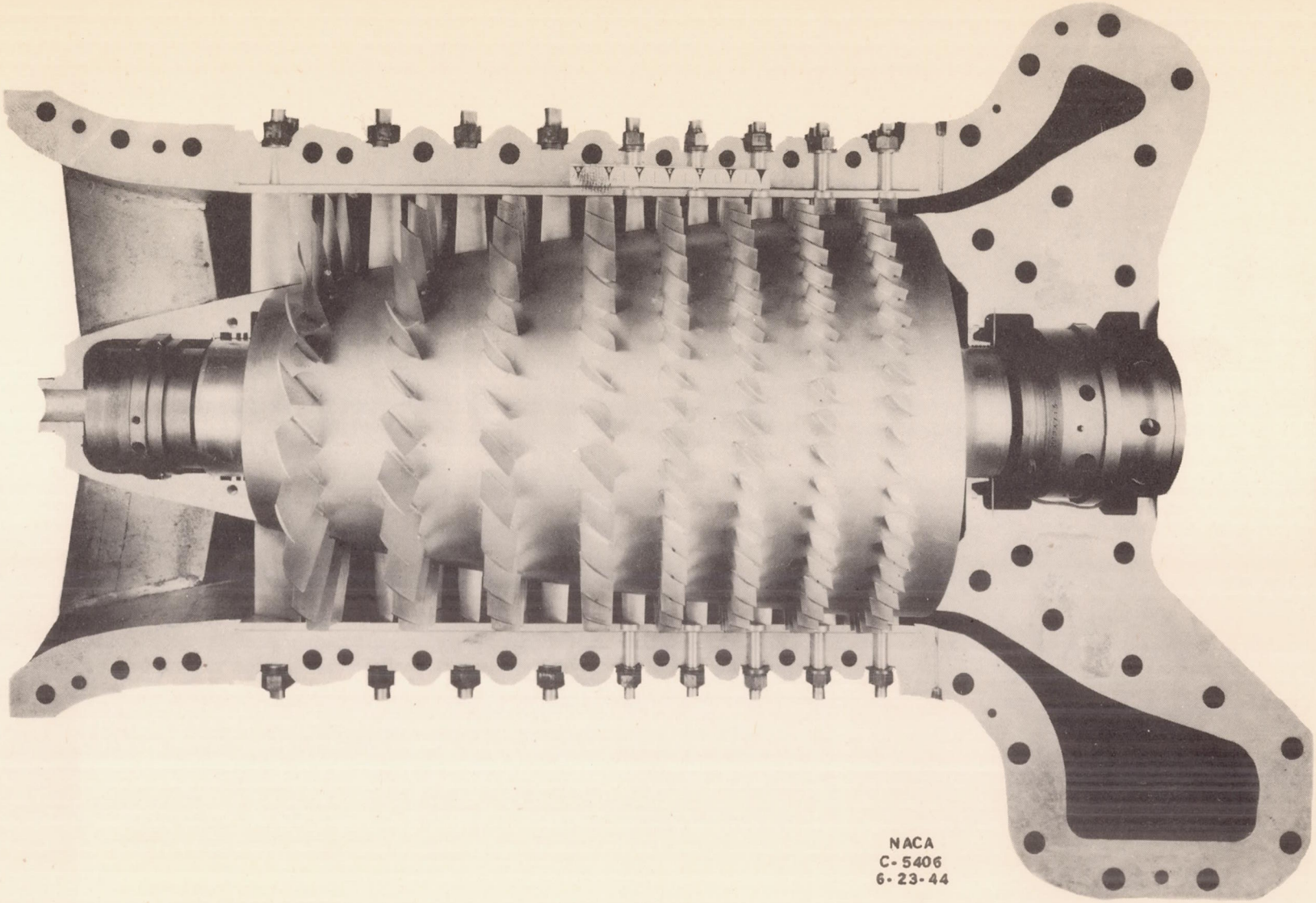

Figure 2. - NACA eight-stage axial-flow compressor with upper half of casing removed.

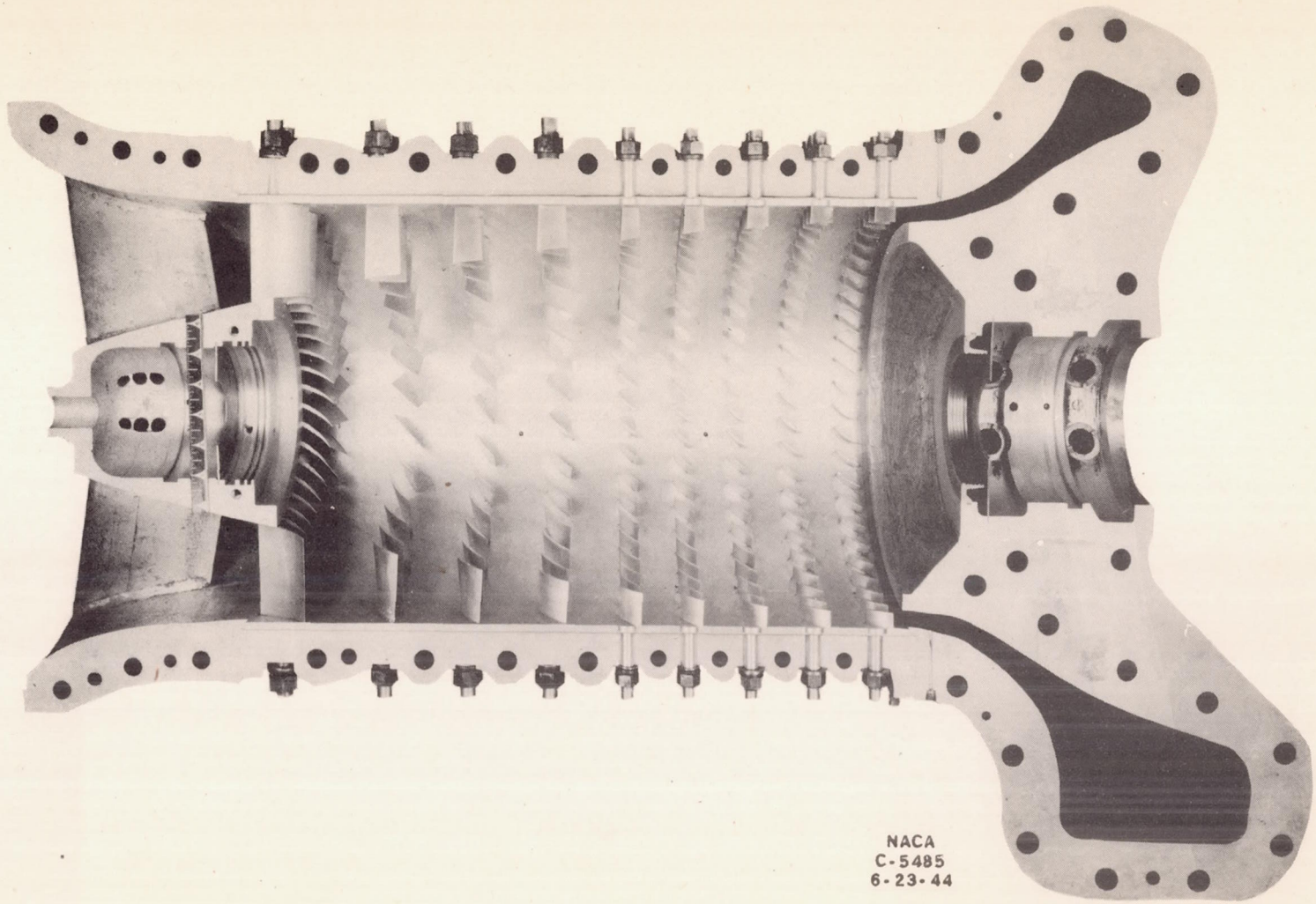

Figure 3. - Lower half of casing showing entrance guide vanes, stator blades, and section of scroll collector.

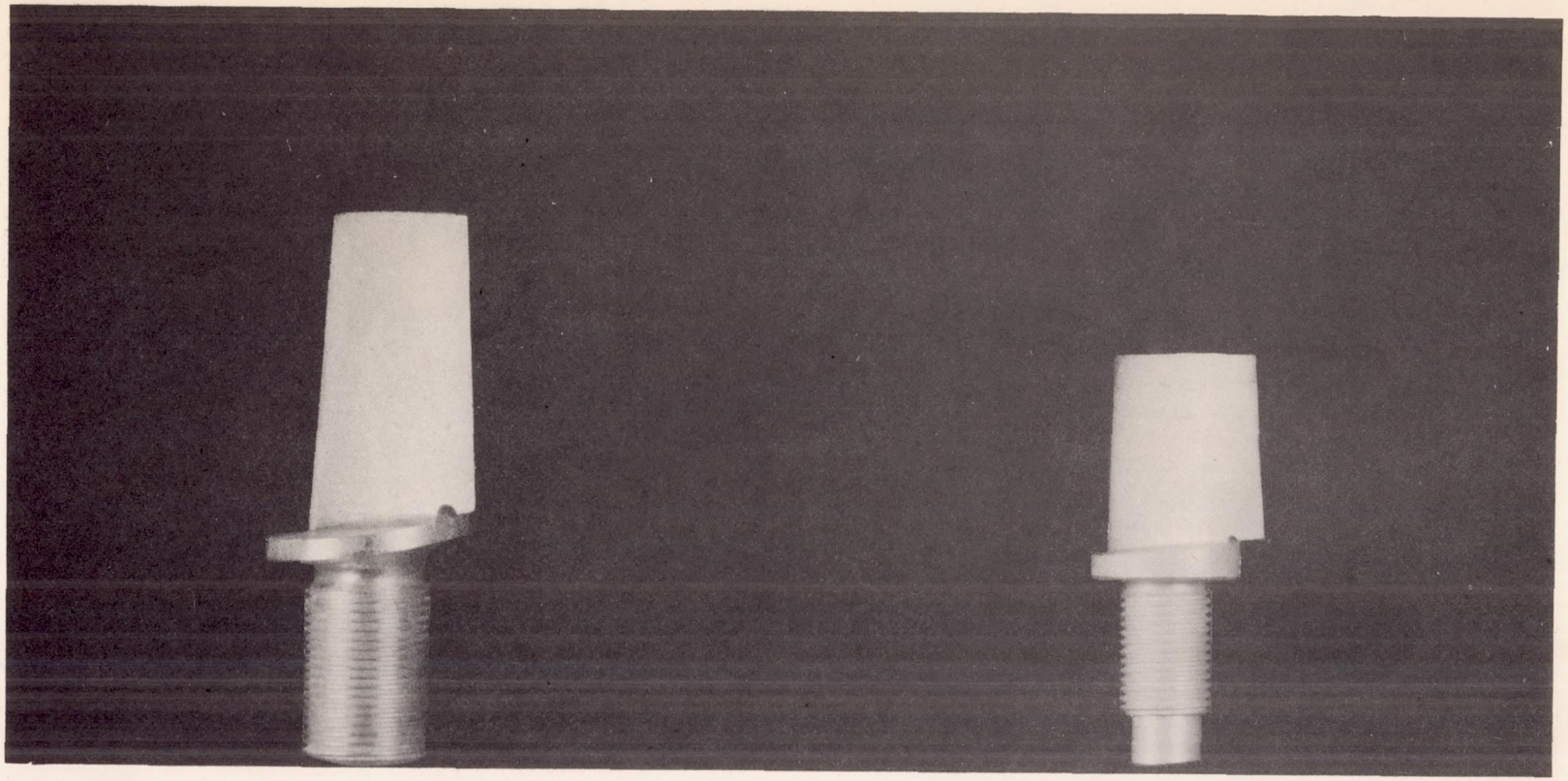

(a) First rows. (b) Last rows.

NACA
C-6319
7-7-44

Figure 4. - Construction of typical rotor blades.

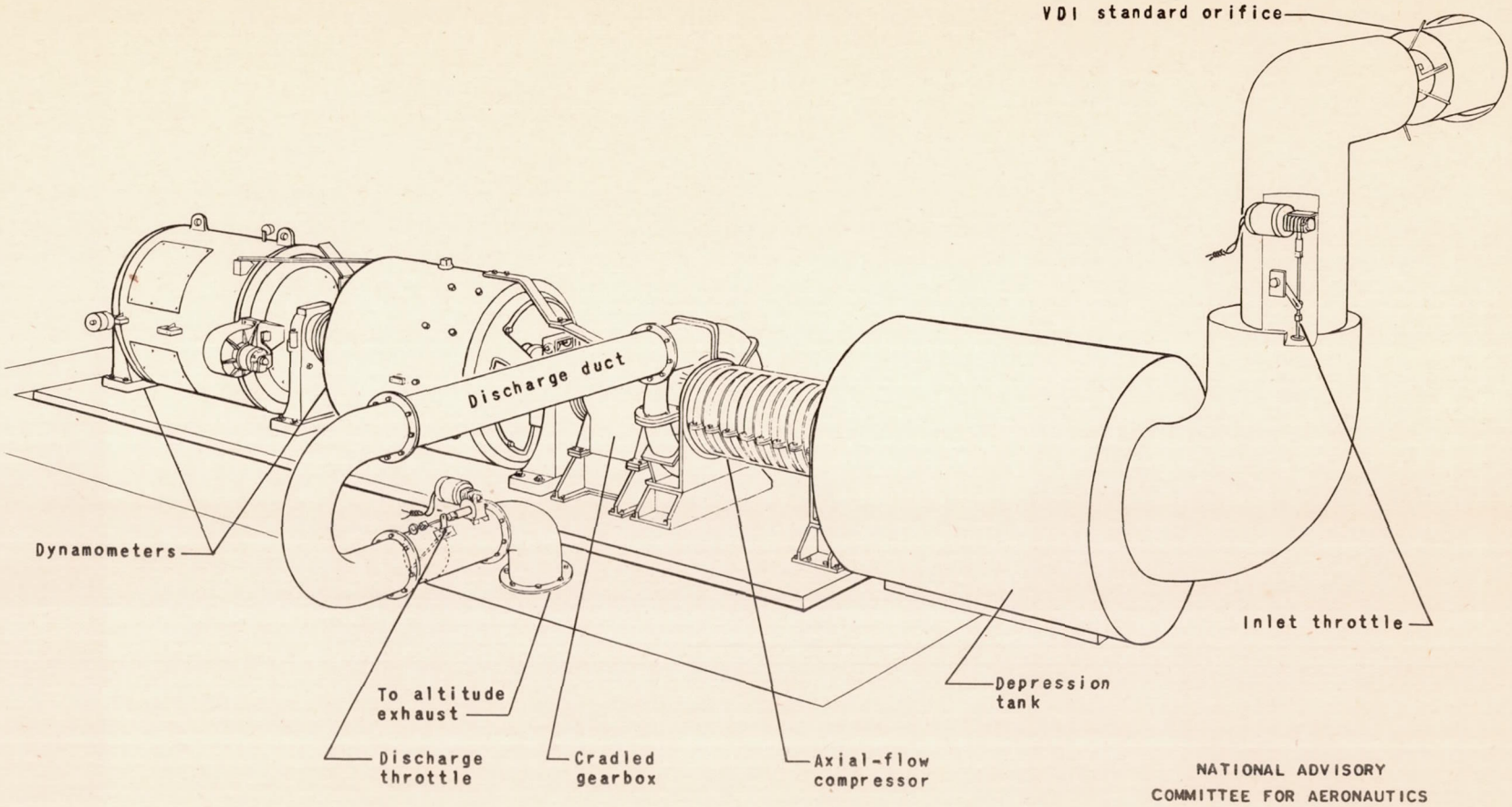

Figure 5. - Setup of equipment for tests of axial-flow compressor showing compressor and discharge duct with lagging removed.

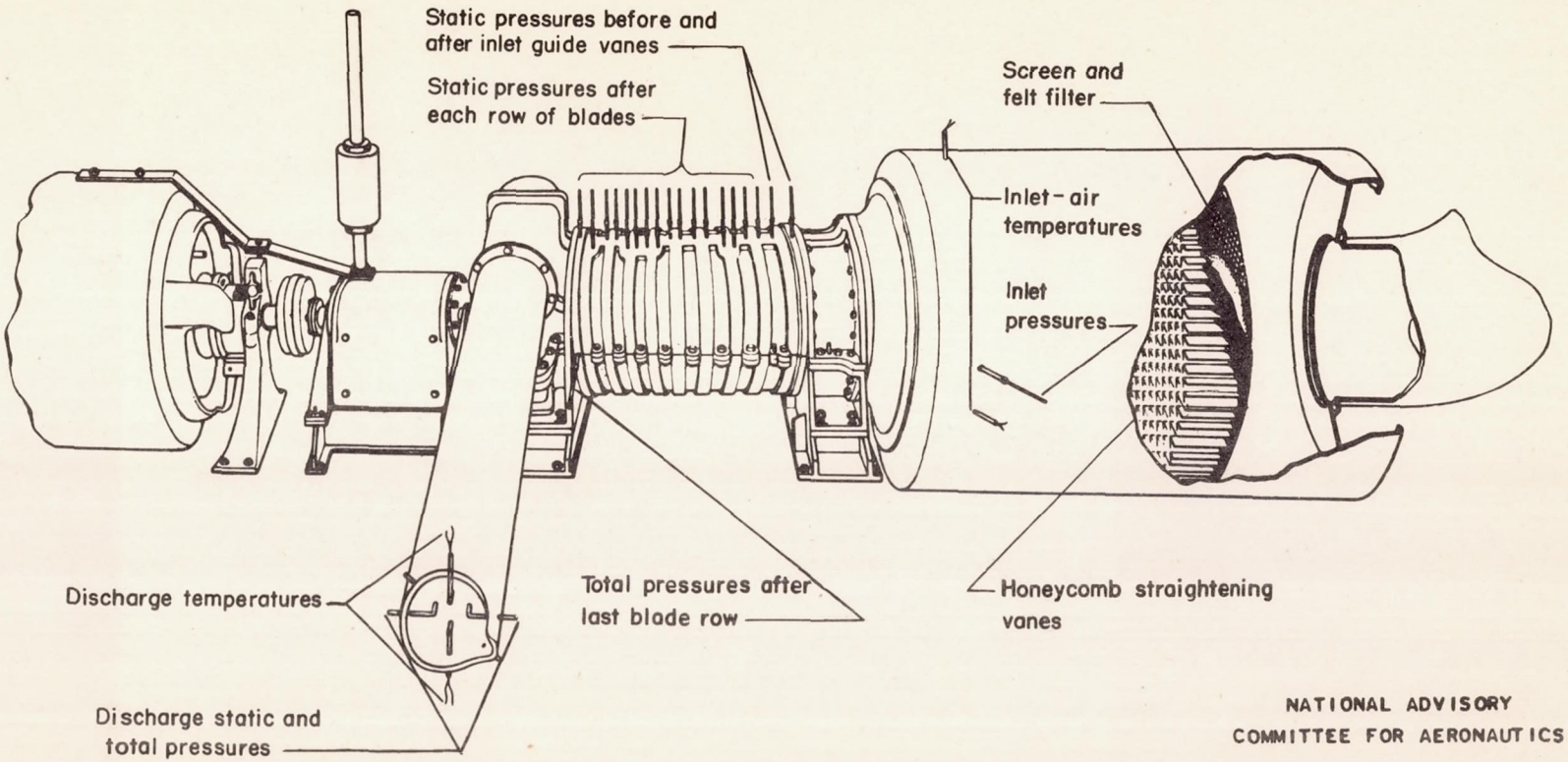

NATIONAL ADVISORY COMMITTEE FOR AERONAUTICS

Figure 6. - Compressor setup showing location of pressure and temperature measuring stations.

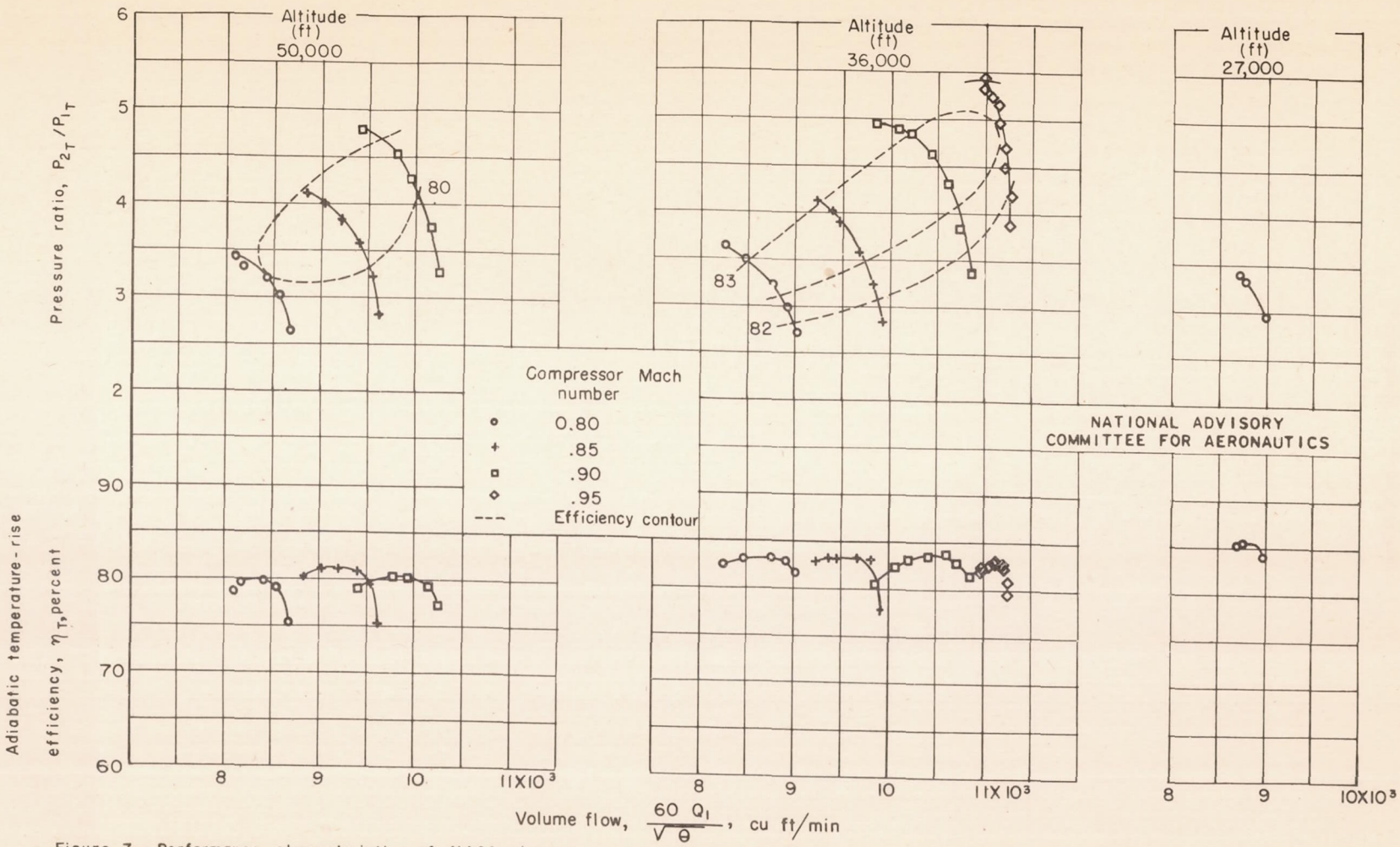

Figure 7.— Performance characteristics of NACA eight-stage axial-flow compressor based on measurements in inlet tank and at exit of last row of blades. Tests were not run to surge point.

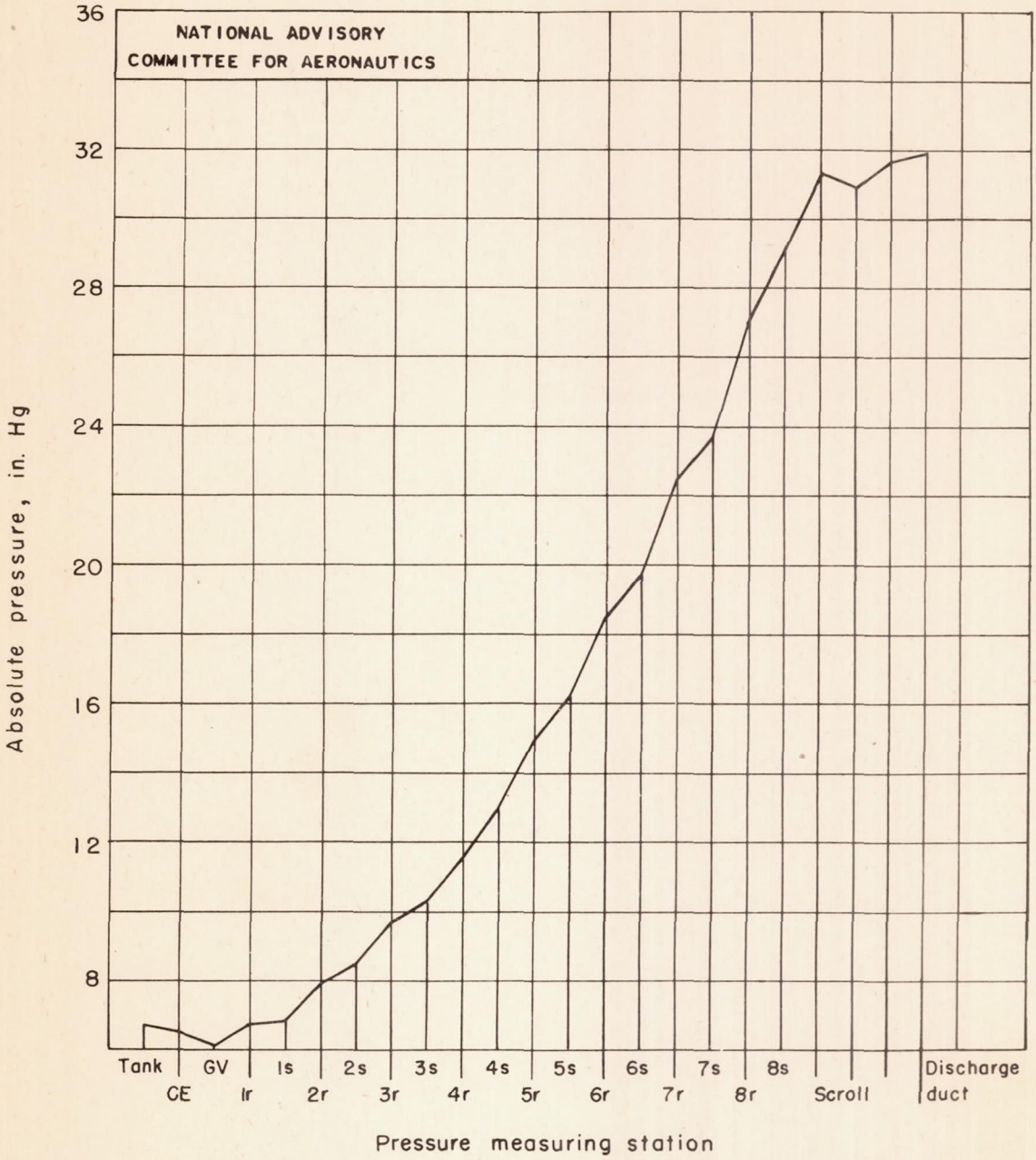

Figure 8. - Pressure variation from inlet tank to discharge duct at compressor Mach number of 0.95, altitude of 36,000 feet, and pressure ratio of 5:1. Compressor entrance, CE; after guide vanes, GV; after each row of rotor blades, 1r...8r; after each row of stator blades, 1s...8s. Pressure through compressor determined from static taps in casing.

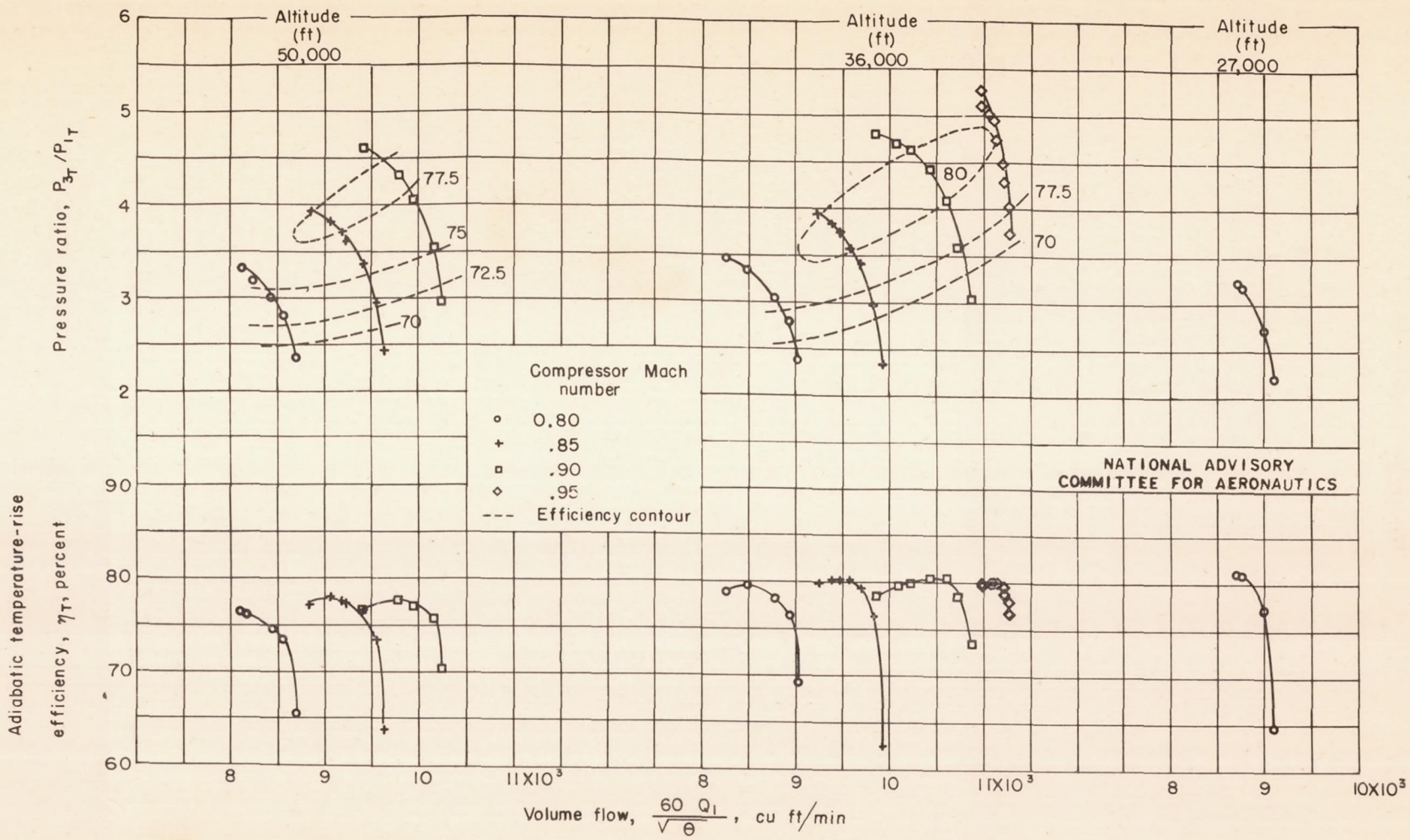

Figure 9.— Performance characteristics of NACA eight-stage axial-flow compressor based on measurements in inlet tank and outlet duct. Tests were not run to surge point.

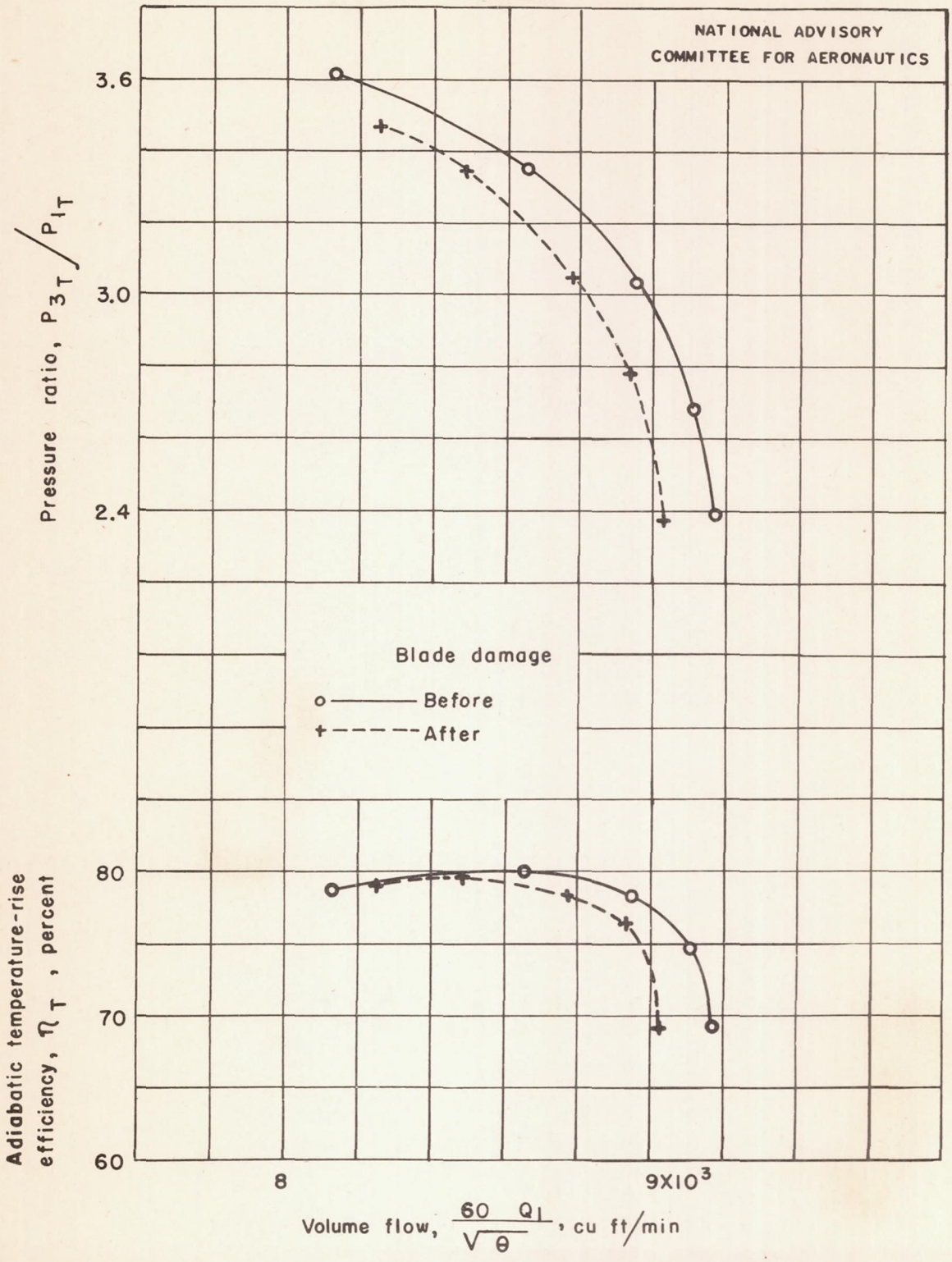

Figure 10.— Effect of blade damage on performance characteristics of NACA eight-stage axial-flow compressor. Altitude, 36,000 feet; compressor Mach number, 0.80.