NATIONAL ADVISORY COMMITTEE FOR AERONAUTICS

TECHNICAL MEMORANDUM 1277

PRESENT STATE OF DEVELOPMENT IN NONSTEADY MOTION OF A LIFTING SURFACE

By P. Cicala

Translation

"Lo Stato Attuale delle Ricerche sul Moto Instazionario di Una Superficie Portante." Estratto Da "L'Aerotecnica" Vol. XXI, N. 9-10, Settembre-Ottobre 1941, XIX.

Washington

October 1951

NATIONAL ADVISORY COMMITTEE FOR AERONAUTICS

TECHNICAL MEMORANDUM 1277

PRESENT STATE OF DEVELOPMENT IN NONSTEADY MOTION OF A LIFTING SURFACE*

By P. Cicala

A summary is given of the principal results thus far obtained from studies of the nonsteady motion of a lifting surface in an incompressible fluid; the methods followed by various investigators are indicated.

The aerodynamic problem of the nonsteady motion of an airfoil has been the subject of numerous investigations, which in 20 years have brought a degree of development such that an entire branch (that of two-dimensional motion) may be said to have been completely solved. The mass of existing publications is very large and among these naturally many overlap; moreover, the study of the problem has produced a variety of methods such that the same phenomenon is endowed with rather diverse aspects that, although of considerable speculative interest, do not always facilitate the task of those who wish to learn only the results of the research. A synthetic deduction of the results thus far obtained is given herein[1] in order to expound the principles of the various methods of investigation and particularly to collect the latest results in a form that is best suited to application.

As previously stated, the two-dimensional problem has been exhaustively studied. In this field, the problems of unsteady motion reduce to computations that at times are laborious, but which can always be conducted without uncertainties of the approximations and which are considerably facilitated by existing tabulations. Only a few attempts have been made to develop a rigorous computation for the wing of finite aspect ratio inasmuch as the existing methods present approximate solutions that contain many inaccuracies.

In part I of this report, the results relative to the wing of infinite aspect ratio are described, always with the assumption of a perfect and incompressible fluid with regard to the components of

---

*"Lo Stato Attuale delle Ricerche sul Moto Instazionario di Una Superficie Portante." Estratto Da "L'Aerotecnica" Vol. XXI, N. 9-10, Settembre-Ottobre 1941, XIX.

[1]The analytic developments have been shortened and the rigor of the demonstrations has at times been relaxed.

of the normal force on the wing plane. In part II, procedures are indicated for the computation of the wing of finite aspect ratio; a comparison is made of the various approximations thus far employed. In part III, the results are given relative to the force component in the direction of motion (propulsive or drag). In part IV, the results of experimental investigations are considered. In each part an evaluation is given of the existing publications, which may serve as a guide to a more detailed study of any aspect of the problem.

Once a reference system is established with respect to which the fluid is motionless at infinity, it is assumed that a fixed plane exists from which the points of the lifting surface are at distances that may always be considered very small with respect to the dimensions of the projection of the surface on the plane. The thickness and the curvature of the profile are therefore considered infinitesimal, as are the displacements along the normal to the fixed plane. Almost all the investigations up to the present time on the nonsteady motion of a wing use simplifications that are derived from the preceding assumption and thus assume that the singularities in which the body in motion is schematized are permanently contained in the fundamental plane. In this plane lie the orthogonal axes x and y, which are displaced with respect to the fixed reference and remain parallel to themselves with a velocity V parallel to the x-axis but opposite in direction; the z-axis is at right angles to the x,y-axes. With respect to these axes, which follow the motion of the wing, the relative velocities of the points of the wing are small with respect to V. It is thus assumed that the perturbations produced by the motion of the wing are sufficiently small. Hence, in the relations that are used, all terms of higher order than the linear terms in the velocities induced by the motion of the obstacle in the surrounding fluid are neglected. This fundamental simplification gives the problem under consideration the advantages of the linear theories (the most important of which is the principle of superposition) from the effects of which by the analysis of particularly simple motions, solutions can be obtained that through linear combinations make possible the study of motions of a more complicated character.

The velocity V is assumed to be small compared with the velocity of sound although investigations have been conducted that consider the compressibility of the medium (reference 1).

The variations in time or space must frequently be measured. The symbols occurring in the derivations herein are therefore defined in the following paragraph:

Let q be any magnitude that is a function of a point and that for every point varies in time. The symbol $\partial q/\partial x$ (or $\partial q/\partial y$) denotes the dependence of the law of variation of q as a function of x (or of y), measured by giving to q, at each point, the values that correspond to a certain fixed time t. The symbol $\partial q/\partial t$ indicates the rate of variation of q at a fixed point relative to the x, y, and z axes, which in the absolute reference system is displaced with the velocity V. In general, with the assumed linearization, the derivative also represents the rate of variation of q at a fixed point of the wing because the velocity of a point of the wing with respect to the moving axes is very small; if the gradient of q is not too great, the variation of q in time will be the same whether measured at the fixed point relative to the moving axes or measured at the point that follows the lifting surface. In order to express the rate of change in time of a q always measured at the same point of the stationary reference, the symbol $d'q/dt$ is used. Because of the assumed linearization, the previous derivative coincides with the derivative that measures the change in q with time for the same material point. Inasmuch as the absolute velocities of the fluid particles are very small, if the gradient of q is not too large, the change of q with time will be the same whether measured at the fixed point or following the molecule. It is preferred in this report to use a distinctive sign in $d'q$ to differentiate the local derivative from the derivative of the quantities that depend for the problem under consideration only on the time parameter; for this problem the notation dq/dt is used.

PART I. - TWO-DIMENSIONAL PROBLEM

1. The results of modern research on the two-dimensional problem will first be described. The simplification introduced by the assumption that the phenomenon develops in the plane of the x- and z-axes is such that it can be stated that each problem within this range can be reduced to the computation of integrals that, with graphical procedures aided by analytical considerations, can be computed with suitable accuracy (limited to the approximation of the existing tables), which eliminates the expansion into series. In the three-dimensional case (the wing of finite span), except for some particular problems, only approximate solutions exist.

In order to simplify the expressions of the two-dimensional problem, the semichord of the wing is assumed to be of unit length. The abscissas of the leading and trailing edge of the wing are assumed to be given by $x = -1$ and $x = 1$, respectively. In order to define

the points of the profile, the parameter ϑ is introduced. The variation with x is shown by the relation

$$x = -\cos\vartheta$$

The values 0 and π of the parameter therefore correspond to the leading and trailing edges of the wing, respectively.

The coordinate z, normal to x, is considered positive in the downward direction (fig. 1). The vertical component w of the velocity of the fluid is therefore considered positive if turned in the direction of positive z. The difference in pressure p between the two faces of the wing has the positive sign directed upward. The same sign convention is true for the vertical force P, the lift of a segment of unit chord. The moment M on the same segment is considered positive if it is a diving moment.

2. Condition of tangency. - The condition that the profile be impenetrable to the fluid is expressed by making the relative velocity of the fluid, with respect to the wing, tangent to the profile; or, in other words, the absolute velocities V_c of a point on the contour and V_f of the fluid particle in contact with the contour have the same projection on the normal n (fig. 2). Inasmuch as only the linear terms in the coordinate z of the points of the contour and their derivatives, or in the velocities (perturbations) created in the fluid by the motion of the wing are considered, the component on n of the velocity V_f may be supposed equal to the component w of the velocity of the fluid particle, which is parallel to z. By using the simplification of neglecting the quadratic terms in the computation of the projection on n of the velocity V_c, which has the components V and $\partial z/\partial t$, there is obtained

$$w = V\frac{\partial z}{\partial x} + \frac{\partial z}{\partial t} \tag{1}$$

3. Circulation and pressure on profile in steady motion. - Under the conditions of steady motion, it is known that the relative velocities of the fluid with respect to the profile, even if the profile is considered to be of infinitesimal thickness, are, in general, different on the two surfaces. In the motion under consideration, if V_1 and V_2 are the velocities at the corresponding points of the two surfaces (fig. 1), the pressure rise p between the surfaces is given by the Bernoulli equation

$$p = \frac{1}{2}\rho(V^2{}_2 - V^2{}_1) = \rho(V_2 - V_1)\frac{V_2 + V_1}{2} = \rho V u$$

where it may be assumed, because of the linearization hypothesis, that the average of the velocities V_1 and V_2 is V, and u denotes the difference between them.

If the wing is in the positive aspect, the smallest velocity is found at the bottom surface. The velocity difference u is considered positive under these conditions and the positive pressure p is therefore in the opposite direction to positive z. In order to represent the field created by the wing, the skeleton of the wing composed of a vortex film is considered; this system of singularities is capable of giving the existing velocity increment u between the two surfaces if the circulation in an element dx is equal to $u\,dx$.

4. Circulation and pressure on profile in unsteady motion. - For the case where the motion is unsteady, the velocity increment may be represented by a vortex distribution of intensity $g = u$. The only difference, when compared with the preceding case, is in the fact that the discontinuity in the velocity field exists not only on the points of the wing but also in the wake behind the wing. In order to describe this phenomenon, consider two fluid layers that pass above and below the profile. Because of the linearization assumption, the distances of the points of the profile from the x-axis can be neglected in the following discussion. It can easily be verified that the terms of the second order will therefore be neglected. The difference between the momentums of the two layers is computed (fig. 3)[2] at the time t_0 and at the time $t_0 + dt$ and therefore the variation that the difference has undergone in the interval dt is also computed. This variation, divided by the interval dt, must be equal to the difference between the forces along x that are applied to the two layers. Inasmuch as tangential actions do not exist (perfect fluid), and because no pressure difference exists on the anterior face (upstream of the profile), the previously mentioned momentums will be given by $(p_1 - p_2)\,dy = p\,dy$. The difference in the momentums of the molecules of the two layers, which is given by the product of the mass and the difference in the velocities u, varies in the interval dt because:

---

[2]The two layers are indicated in figure 3 by hatched lines in the two directions; the position of the leading edge of the profile is indicated by a semicircle.

1. New molecules come in contact with the profile[3] and therefore acquire the velocity increment $u = g$.

2. The increment for a given point of the profile varies with time.

If the graphs of g relative to $t = t_0$ and $t = t_0 + dt$ on the same position of the profile (fig. 3) are plotted corresponding to the two causes, respectively, it is found that the area (which gives the difference in the momentums when multiplied by $\rho\ dy$) varies in the interval dt by the amount

$$gV\ dt + dt \int_{-1}^{x} \frac{\partial g}{\partial t}\ dx$$

The first term is indicated in figure 3 by the obliquely hatched area (which, except for infinitesimals of higher order, is equivalent to a rectangle of base $V\ dt$ and altitude equal to the value of g corresponding to the abscissa x of point P); the second term is indicated by the vertically hatched area. Equating the impulse to the variation of the momentum and dividing by $\rho\ dy\ dt$ yield[4]

$$\frac{p}{\rho} = Vg + \int_{-1}^{x} \frac{\partial g}{\partial t}\ dx \tag{2}$$

The first term on the right side measures the pressure at P, which is obtained under the conditions of steady motion; this pressure depends on the local value of the velocity increment. By the effect of the other term, the pressure under the conditions of nonsteady motion depends on the variation that g undergoes at the instant considered in the entire strip ahead of P.

---

[3]The difference of the momentums of the two layers is observed to be zero before arriving at the wing because the velocity increment in front of the wing is zero if there are no other lifting surfaces.

[4]This relation is obtained by another method in differential form in reference 2.

5. Vorticity of wake. - If at the instant $t = t_0$ the point P coincides with the trailing edge of the wing, equation (2) still holds, but the first term becomes zero because a difference in pressure cannot exist where there is no wing surface. It follows that the increase in velocity g_s existing in the points of the wake, which is zero in the case in which the distribution of g on the wing is independent of the time, is given by

$$g_s = -\frac{dK}{V\,dt} \tag{3}$$

where

$$K = \int_{-1}^{1} g\,dx$$

is the circulation about the wing and the derivative is measured at the instant at which the trailing edge passes through the point of the wake under consideration. In other words, in the distance $V\,dt$ that the wing moved in the time interval dt a vorticity is distributed equal to the variation that the circulation about the profile has undergone in the same time. This conclusion can also be derived from the principle of the conservation of vorticity.

In figure 4, the diagram of the vorticities on the profile and in the wake is given for the case in which the wing executes a translatory oscillation with frequency Ω related to L and V by

$$\Omega L = 2V$$

The curve a refers to the instant in which the wing crosses the middle position; b refers to the position at the end. The scale of the vortices is indicated by assuming the vertical maximum velocity of the profile to be unity. For comparison, figure 4 shows the graph of the circulation g' corresponding to the maximum velocity in the case of steady motion. The increment of velocity in the wake is considerable. In the theories of a wing in nonsteady motion, it is generally assumed that this velocity increment remains in the position in which it originated, or, in other words, that the vortices

shed by the wing maintain their original position and intensity unaltered in time. It is evident that the error inherent in this assumption, from which the real phenomenon certainly deviates, impairs to some extent the results of the theory.

6. Bound and free vortices. - An original physical interpretation of equation (2) was given by Birnbaum (reference 3). By setting

$$\gamma = \frac{p}{\rho y} \tag{4}$$

$$\epsilon = -\frac{1}{V}\int_{-1}^{x} \frac{\partial g}{\partial t}\, dx \tag{5}$$

Equation (2) is written as

$$g = \gamma + \epsilon \tag{6}$$

With the aid of this relation, the value of the total vorticity g at a point on the profile at which the velocity increment between the corresponding points of the top and bottom surfaces is divided into two parts:

(1) The bound vorticity γ, which is sustained by the aerodynamic action

(2) The free vorticity ϵ, which trails in the fluid in its relative motion and which therefore gives no pressure rise

In order to clarify the relation between the free vortices and the bound vortices, equation (2) is differentiated with respect to x after g is expressed in terms of equation (6). Thus,

$$-\frac{\partial \gamma}{\partial t} = \frac{\partial \epsilon}{\partial t} + V\frac{\partial \epsilon}{\partial x} = \frac{d'\epsilon}{dt} \tag{7}$$

This relation indicates that the variation undergone in an interval of time by the vortex ϵ at a point of the fluid is equal (and of opposite sign) to the variation undergone in the same time by the bound vortex at the point of the profile in contact with it. In other words, the bound vortices leave at each instant, in the fluid with which they come in contact, an effect represented by a vorticity of intensity equal to that which they have produced at that instant. According to this representation, each of the inducing elements at the wing is considered in isolation and therefore produces a pressure rise expressed by equation (4) and has a proper vortex wake. The free circulation at any point on the wing or downstream of it is given by the sum of the circulations of the wakes corresponding to the bound vortices that are upstream of the point considered.

The decomposition of the total circulation in the two vortex systems previously described is shown in figure 4. It can be seen that the graph of the free circulations on the chord are joined in a continuous manner with the system of the wake at the point where the free circulation is equal to the total circulation.

7. Relations between circulations and normal velocities. - Ordinarily, the law of variation of w along the chord and with time is known from equation (1), with the aid of which these quantities are derived from the characteristics of the motion. The vorticities on the wing and in the wake must induce at each instant on the points of the chord the assigned w; that is,

$$w(x) = \frac{1}{2\pi}\int\frac{g(x')\,dx'}{x'-x} \tag{8}$$

The integration is extended from the leading edge of the wing to the entire part of the wake in which the passage of the wing has created the vorticity discontinuity.

It is known that, for the wing in steady motion, the field of motion would not be determined if the point of separation (trailing edge of the wing) were not fixed. This condition is also assumed for the wing in unsteady motion and is translated into the analytical condition that g be finite at the trailing edge of the wing.

The vorticity in the wake is connected with that at the wing by equation (3). When equation (8), which is completed by the condition of separation and by equation (3), is solved the total vorticity

g is obtained. The pressures are then obtained by making use of equation (2). As will be shown in more detail in section 17, this scheme is followed by various procedures of solution by Theodorsen, who makes use of conformal transformations (reference 4), Schwarz (reference 5), who makes use of Betz's solution of equation (8), and Söhngen (reference 6). Wagner and Glauert also refer to the total vorticity, but determine the total action on the profile and not the pressure distribution (as do von Kármán and Sears, reference 7).

When a different method is used, the free circulation on the chord and in the wake can be expressed as a function of γ by making use of the integrated equation (7) and thus transforming equation (8) so that only the unknown function γ appears in it. Then the pressures can be directly obtained by means of equation (4). This procedure was followed by Birnbaum (reference 3), by Kussner (reference 8), and by Cicala (reference 9).

8. Acceleration potential. - A different interpretation of the same problem can be made on the basis of the acceleration potential. For a perfect and incompressible fluid, the equation of Euler

$$a = - \operatorname{grad} \frac{p}{\rho}$$

expresses the equality between the force of inertia, which corresponds to the acceleration a of the fluid particle, and the resultant of the forces that are transmitted to the particle by the medium surrounding the particle. The Euler equation also permits stating that the components of the acceleration can be obtained from the function p/ρ through the same operations of differentiation with which the components of the velocity are deduced from the corresponding potential. The generating singularities are arranged on the surface of discontinuity (wing + wake) for the acceleration field whose potential satisfies analytical properties similar to those of the velocity potential in the same manner as for the velocity field. The singularities are arranged where the discontinuity exists in the pressures; that is, on the lifting surface. The simplification that is introduced by this concept is not, however, as great as might appear from the fact that the singularities (which are called the dipoles of the pressure) are limited only to the wing. In each case, it is necessary to pass from the acceleration field to the velocity field and this passage requires an integration through which the effects of all the preceding states of motion are felt and which, according to the

vortical representation, leaves a trace in the system of free vortices. In other words, the velocity field of the pressure dipoles depends on the history of the formation of the dipole.

The relation between the vortex representation of the phenomenon and that based on the pressure dipoles is already implied in the concept of Birnbaum of the vortices shed from all the points of the airfoil that is the only source of the bound vorticity γ, which is proportional to the difference in pressure between the two faces of the profile. A method will be shown, on the basis of the concept of vortices, for the derivation of some fundamental relations that in other publications are justified with the procedure of the acceleration potential.

The system of bound vortices induces at a point O at the instant $t = \tau$ a velocity that is denoted $\underline{V}_a$; at a succeeding instant $t = \tau + \Delta\tau$, at a point that occupies, with respect to the wing, the same position that O occupied in the first condition, there will be a velocity differing from $\underline{V}_a$ by an amount denoted by $\Delta\underline{V}_a$. The velocity $\Delta\underline{V}_a$ will depend on the variation in the constitution of the induction system or, with changed sign, will be the velocity induced by the system of vortices that, at the instant considered, are freed from the bound system and constitute the trace that the bound system has left in the fluid with which it has been in contact. The quantity $\Delta\underline{V}_a/\Delta\tau$, as $\Delta\tau \rightarrow 0$ as a limit, represents the derivative $\partial\underline{V}_a/\partial t$. Hence, if it is desired to express analytically the property that the actual velocity $\underline{V}_f$ of the fluid particles results from the sum of the velocities induced by the actual configuration of the bound vortices and from those freed at the preceding instants, then

$$\underline{V}_f = \underline{V}_a - \int_{-\infty}^{t} \frac{\partial \underline{V}}{\partial t}\, d\tau \tag{9}$$

where $\underline{V}_a$ and $\underline{V}_f$ are computed at the point and at the instant t, $\partial\underline{V}/\partial t$ being computed at the point of the fixed space being considered, and the system of bound vortices is in the corresponding position at the instant τ preceding t. In the case of translational motion or, more precisely, in the linearization assumed, the terms of the second order in the velocities of the points of the wing relative to a system that is displaced with translational motion with velocity V

are neglected; the term $\partial \underline{V}_a/\partial t$ is measured by having the point of induction at the abscissa $x-V(t-\tau)$, or, with respect to the point 0 of the abscissa x to which the velocity $\underline{V}_f$ refers, in a position upstream, advanced by the quantity $V(t-\tau)$ if V is assumed constant.

The following relation can be obtained from equation (9):

$$\frac{d'\underline{V}_f}{dt} = \frac{\partial \underline{V}_a}{\partial x} V \tag{10}$$

The quantity $\underline{V}_a$ is the velocity induced at 0 at the constant t by the bound-vortex film layer. From the instant $t-dt$ to the instant t, the vortex system changes only in the number of the bound vortices leaving a trace and that occupy the position corresponding to the time t. The variation that the velocity $\underline{V}_f$ of the fluid has undergone at the point 0 of the fixed space because of the effect of this change (local variation $d'\underline{V}_f/dt\ dt$) is that which would be measured by leaving the vortices γ in position and moving the point of induction of the segment $dx = Vdt$ so that the point of induction occupies the position that corresponds to the instant t; the variation that is measured in this manner is expressed by $\partial \underline{V}_a/\partial x\ dx$ and is thus added to equation (10), which equates the two expressions of the variation.

Relations (9) and (10) are equivalent[5] to the relations derived by Possio, which are based on the concept of the acceleration potential, if it is assumed that the stationary field $\overline{C}$, defined in reference 10, coincides with the field produced by the system of bound vortices in a uniform stream V. Inasmuch as the concept of

---

[5]Equation (10) is derived directly if the acceleration field is considered to depend only on the actual values of the pressures on the profile and, with the pressures equal, has the same configuration as though the motion were steady. In this case, according to equation (4), the actual pressures would be obtained by having only the actual values of γ on the profile: the velocity of the fluid would be $\underline{V}_a$ and the acceleration that, by the assumed linearization, is computed from $d'\underline{V}_a/dt$ (and not from the derivative formed in following the fluid particle) would be expressed by $d'\underline{V}_a/dt = \partial \underline{V}_a/\partial x\ V$ (without $\partial \underline{V}_a/\partial t$ because this virtual field is steady). When the acceleration of this virtual field is equated to the effective acceleration, which is written $d'\underline{V}_f/dt$, equation (10) is obtained, which when integrated, gives equation (9).

the acceleration potential lends itself less to physical interpretations than the concept founded on vortices although some simplifications can be obtained in the analytical development, it is preferred, in the following sections, to employ the classical method of description.

9. Cases of total zero circulation. - If the total circulation about the wing is constant in time and the system has no vortices in the wake, the induced velocities can be computed on the basis of the total circulation about the wing at the instant considered in the same manner as for steady motion. From the analysis relative to this case (reference 11, p. 185), it is known that if the circulations are represented by one of the following functions

$$\left.\begin{aligned} g_1 &= \cot\frac{\vartheta}{2} - 2\sin\vartheta \\ g_n &= -2\sin n\vartheta \qquad (n = 2, 3, \ldots) \end{aligned}\right\} \tag{11}$$

the corresponding velocities are respectively given by

$$\left.\begin{aligned} w_1 &= \frac{1}{2} + \cos\vartheta \\ w_n &= \cos n\vartheta \end{aligned}\right\} \tag{12}$$

Inasmuch as the values of g_n represented by equation (11) satisfy the condition

$$K = \int_{-1}^{1} g\,dx = 0$$

the preceding result holds for any motion because no wake exists downstream of the body. Thus,

$$w = \Sigma A_n w_n$$

where A_n are quantities independent of ϑ but functions of time. The total circulations are represented by the corresponding sum

$$g = \Sigma A_n g_n \tag{13}$$

The corresponding bound vortices are represented by $\Sigma \gamma_n$, where, as derived from equations (5) and (6),

$$\left.\begin{aligned} \gamma_1 &= A_1\left(\cot\frac{\vartheta}{2} - 2\sin\vartheta\right) + A'_1(\sin\vartheta + \sin\vartheta\cos\vartheta) \\ \gamma_n &= -2A_n\sin n\vartheta + A'_n\left(\frac{\sin(n+1)\vartheta}{n+1} - \frac{\sin(n-1)\vartheta}{n-1}\right) (n = 2, 3, \ldots) \end{aligned}\right\} \tag{14}$$

$$A'_n = \frac{dA_n}{V\,dt} \tag{15}$$

In general, the values of w can be expressed by expanding in a Fourier series:

$$w = \frac{1}{2}A_0 + \Sigma A_n \cos n\vartheta \tag{16}$$

The coefficients A_n, general functions of time, can be obtained by harmonic analysis by setting

$$\bar{w} = w - \Sigma A_n w_n$$

There is easily obtained

$$\bar{w} = \frac{1}{2}(A_0 - A_1) \tag{17}$$

It is therefore concluded that, if the vertical velocities on the profile are developed in Fourier series, the circulations and the pressures can be directly computed with the aid of equations (13)

and (14) if $A_0 = A_1$. In the general case, it will be necessary to sum the circulations (equation (13)), which correspond to the velocity

$$\bar{w} = \frac{1}{\pi}\int_0^{\pi} w(1 - \cos\vartheta)\, d\vartheta \tag{17'}$$

which is a function of time, but is constant over the chord.

10. Case of velocity w constant over chord. - Applying equation (10) for the potential on the z-axis, inasmuch as w is the projection of V_f, yields

$$\frac{d'w}{V\,dt} = \frac{\partial V_a}{\partial x} \tag{18}$$

where V_a is the projection of the vector $\underline{V_a}$ on z.

Because at each instant w assumes, for all the points of the chord, the value $\bar{w}$, the following relation is obtained:

$$\frac{d'w}{dt} = \frac{d\bar{w}}{dt}$$

and, therefore, from equation (18), integrating along the chord yields

$$V_a = \frac{d\bar{w}}{V\,dt}\,x + C$$

where C is a constant with respect to x, but is a function of time. From the analysis of steady motion, it is known that the distribution of the vorticity capable of giving velocities satisfying the condition at the edge is given by

$$\gamma_0 = 2\,\frac{d\bar{w}}{V\,dt}\sin\vartheta + 2\,C\cot\frac{\vartheta}{2} \tag{19}$$

In order to investigate the dependence of C on the condition of motion, the elementary case is considered in which $\overline{w}$, which has been zero for an indeterminate time, suddenly acquires, at the instant t', the value $\Delta\overline{w}$ and maintains it unchanged. For such a case, for $t > t'$, C, which must be proportional to $\Delta\overline{w}$, may be put in the form

$$C = (1-R)\,\Delta\overline{w} \tag{20}$$

where R is a function of the space passed through by the wing since the instant t'. Because, with the passing of time, the phenomenon tends toward the steady conditions for which the circulation tends to assume the distribution

$$\gamma_0 = 2\,\Delta\overline{w}\cot\frac{\vartheta}{2} \tag{21}$$

the asymptotic value of R must be zero. The law of the variation of R was studied in one of the first publications on the wing in unsteady motion (reference 12, which gives a résumé of the work of Pistolesi to whom reference is made). The more general case is obtained from the elementary case by superposition of the effects. According to equation (20), the second term of expression (19) is decomposed into the asymptotic term (equation (21)) and a term that contains the function R and represents the distribution of the circulation that would be realized if $\overline{w}$ possessed, from an indeterminate time, the value $\Delta\overline{w}$ up to the instant t', and then for $t > t'$, $\overline{w} = 0$. The pressures corresponding to this term, which represents the effect of the preceding variation and diminishes to zero with time, can be referred to as "transitory pressure."

In the computation of C in a general case, summing the effects of all the increments that $\overline{w}$ has received from the start of the motion, when it may be supposed $\overline{w} = 0$ (so that $\Sigma\Delta\overline{w} = \overline{w}$), there is obtained

$$C = \overline{w} - \int_0^{\overline{w}} R\,d\overline{w} \tag{22}$$

The integral is taken as the sum of the products of all the variations that $\bar{w}$ has undergone in the preceding instants (the procedure is not modified whether the variations are abrupt or gradual) for the corresponding values of R. The distance traveled by the wing, measured from an arbitrary origin, is denoted by s; the value of s for the position at which the pressures are measured is denoted by s_0 and the value of s for the distance s_0-s referred to the semichord is denoted by σ. The values of the function $R(\sigma)$ are given in table I. These values have been obtained from the recent tabulations of Kussner and Schwarz (reference 13).

11. General solution. - When the expressions of the two preceding sections are collected, the resultant pressures for a general case of motion may be computed. If the values of w are expressed by the series of equation (16), which is put in the form

$$w = \bar{w} + \Sigma A_n w_n \tag{16a}$$

the pressures corresponding to the first term, according to equations (19) and (22), are given by

$$p = \rho V \left[2 \frac{d\bar{w}}{V\,dt} \sin \vartheta + 2\left(\bar{w} - \int_0^{\bar{w}} R\, d\bar{w}\right) \cot \frac{\vartheta}{2} \right]$$

whereas, the values of w that constitute the summation of equation (16a) correspond to the pressures

$$p = \rho V\ \Sigma \gamma_n$$

where γ_n is expressed by equation (14).

It is convenient to divide the total pressures into a part that depends on the history of the motion and has been denoted as the transitory pressure given by

$$\frac{\bar{p}}{\rho V} = -\ 2 \cot \frac{\vartheta}{2} \int_0^{\bar{w}} R\, d\bar{w} \tag{23}$$

and into a part $\bar{\bar{p}}$, which depends only on the actual values of the parameters that characterize the motion and is denoted by the "instantaneous" pressure, given by

$$\frac{\bar{\bar{p}}}{\rho V} = 2\,\bar{w}\cot\frac{\vartheta}{2} + 2\,\frac{d\bar{w}}{V\,dt}\sin\vartheta + \Sigma\gamma_n$$

When equations (14) and (17) are used, this relation assumes the form

$$\frac{\bar{\bar{p}}}{\rho V} = A_0\cot\frac{\vartheta}{2} - 2\sum_1^{\infty}\left(A_n + \frac{A'_{n+1} - A'_{n-1}}{2n}\right)\sin n\,\vartheta \tag{24}$$

For the computation of the pressures on the profile, the following operations are therefore required:

(I) From the law of motion there is obtained, with the aid of equation (1), the expression for w as a function of time and of the coordinate ϑ.

(II) By developing w in a Fourier series, the values of A as functions of time are computed.

(III) From the instantaneous values of A and the derivatives, the values of $\bar{\bar{p}}$ are computed from equation (24). When $\bar{w}$ has been determined from equation (17), the values of $\bar{p}$ are computed by equation (23) and hence the resultant pressure $p = \bar{p} + \bar{\bar{p}}$. The total force and moment are obtained by the simple integrals

$$P = \int_{-1}^{1} p\,dx$$

$$M = \int_{-1}^{1} px\,dx$$

The formulas given here are also valid without change if V varies from one instant to the next. In such a case, it is convenient to assume as a reference variable instead of time the distance s traveled by the wing. Therefore

$$A'_n = \frac{dA_n}{ds}; \text{ where } ds = V\,dt.$$

In the calculation of the transitory pressures, the expression (23) is usually computed by graphic integration. When the diagram of $\overline{w}$ as a function of σ is known and the value of R is obtained from table I, it is convenient to draw the graph of $\overline{w}(R)$ (fig. 5), which is obtained by laying off, for each ordinate $\overline{w}$, the corresponding value of R for the same position. The area enclosed by this curve, by the vertical axis, and by the two horizontal lines through the ends (one of which is the axis $\overline{w} = 0$) represents the integral of equation (23) (cross-hatched area in fig. 5). If when tracing around the contour from a to b the area is on the right, the area is considered positive; in figure 5 the value would be considered negative. Even though the graph of $\overline{w}$ presents abrupt variations (as in the case of the figure), no complications are thereby introduced.

When it is possible to proceed by the analytic method in computing the preceding integral, it is convenient to assume as the variable of integration the distance s. Equation (23) is therefore written as

$$\frac{\overline{p}}{\rho V} = -2 \cot \frac{\vartheta}{2} \int_{-\infty}^{s_0} \frac{d\overline{w}}{ds} R(s_0 - s)\, ds \tag{23'}$$

or as

$$\frac{\overline{p}}{\rho V} = 2 \cot \frac{\vartheta}{2} \int_{0}^{\infty} \frac{d\overline{w}}{d\sigma} R(\sigma)\, d\sigma \tag{23''}$$

12. Example of application. - Let it be assumed that the wing always displaced with constant velocity in magnitude and direction undergoes a sudden small rotation (of small amplitude) about a point

of the chord. Let there be determined the law of the variation of lift and of the focal moment at the instant of the rotation.

It is convenient first to assume that the rotation occurs in a finite interval of time and then passes to the limit to let the interval approach zero. Let α be the angle of rotation, φ the final value of α, and $\vartheta = \vartheta_0$ the coordinate of the axis of rotation. While the wing travels through the distance from $s = 0$ to $s = \Delta$, the angle α increases continuously. Let

$$\text{for} \quad s < 0, \quad w = 0$$

$$\text{for} \quad 0 < s < \Delta, \quad w = \alpha V + \frac{d\alpha}{ds}(\cos\vartheta_0 - \cos\vartheta)$$

$$\text{and for} \quad s > \Delta, \quad w = \varphi V$$

Hence,

$$\frac{A_0}{2} = V\left(\alpha + \frac{d\alpha}{ds}\cos\vartheta_0\right)$$

$$A_1 = -V\frac{d\alpha}{ds}$$

$$\overline{w} = V\left(\alpha + r\frac{d\alpha}{ds}\right)$$

$$r = \frac{1}{2} + \cos\vartheta_0$$

for s between zero and Δ the rotation is $\overline{w} = V\varphi$. In the first phase,

$$\frac{d\overline{w}}{ds} = \left(\frac{d\alpha}{ds} + r\frac{d^2\alpha}{ds^2}\right)V$$

and in the second phase, $d\overline{w}/ds = 0$. If $s = s_0$ (the position for which the pressures are measured), let R_0, R'_0 ... be the values of R and the derivatives for $\sigma = s_0$. Equation (23') is then written by expanding R in a power series in s:

$$-\overline{p} = 2\rho V^2 \cot \frac{\vartheta}{2} = \int_0^\Delta (R_0 - s\,R'_0 + \ldots)\left(\frac{d\alpha}{ds} + r\,\frac{d^2\alpha}{ds^2}\right)ds \tag{25}$$

Then

$$\int_0^\Delta \frac{d\alpha}{ds}\,ds = \varphi$$

$$\int_0^\Delta \frac{d^2\alpha}{ds^2}\,ds = 0$$

$$\int_0^\Delta s\,\frac{d^2\alpha}{ds^2}\,ds = \varphi$$

and moreover, the quantities

$$\int_0^\Delta s^n\,\frac{d\alpha}{ds}\,ds$$

$$\int_0^\Delta s^{n+1}\,\frac{d^2\alpha}{ds^2}\,ds$$

for Δ approaching zero become zero at Δ^n.

Thus, from equation (25), for Δ approaching zero,

$$-\bar{p} = 2\rho\varphi V^2 \cot \frac{\vartheta}{2} (R_0 - r R'_0)$$

From this relation it is concluded that the transitory pressure decreases according to the function R if $r = 0$ or if the rotation occurs about the neutral rear point. If r is different from zero, a term is added in the law of variation of p that decreases as the derivative of R; this term corresponds to the pressure distribution that is created on the wing in uniform rectilinear motion and that executes an instantaneous displacement in the direction normal to the trajectory and then continues with the initial speed and direction.

The pressures $\bar{\bar{p}}$ after the rotation are given by

$$\bar{\bar{p}} = 2\rho\varphi V^2 \cot \frac{\vartheta}{2}$$

Hence, the lift after the rotation is expressed by

$$P = \int_L (\bar{p} + \bar{\bar{p}})\, dx = \pi\rho\varphi L V^2 (1 - R + rR') \tag{25d}$$

where L is twice the chord of the profile and R and R' are the function of table I and its derivative, respectively, both approaching zero with an increase of the independent variable, which is represented by the distance of the actual position from that at which the rotation has occurred.

In take-off of the wing, that is, when the wing starts its motion from rest,

$$\bar{w} = V\varphi$$

In the interval $0 < s < \Delta$, V passes from zero to its final value V_0. For $\Delta \rightarrow 0$,

$$\lim \int_0^{\Delta} R \, ds \, \frac{d\overline{w}}{ds} = R_0 \, \varphi V_0$$

and the lift is therefore still expressed by equation (25a), in which the factor in parentheses reduces to 1-R (Wagner's case). For the moments, because the pressures are always proportional to $\cot \vartheta/2$,

$$M_F = \int_{-1}^{1} (\overline{p} + \overline{\overline{p}}) \left(x + \frac{1}{2}\right) dx = 0$$

In the preceding computation, the impulsive pressures that are generated at the instant of the rotation and cease when rotation has occurred were considered. The values are therefore immediately obtained with the aid of equation (24).

13. Computation in finite terms of instantaneous pressures. - For the determination of the instantaneous pressures, a convenient expression is given by Söhngen, by means of which these expressions are obtained directly from w without expanding in a Fourier series. The expression, modified to conform with the notation used herein, may be given in the following form:

$$\overline{\overline{p}}/\rho \, V = A_0 \cot \frac{\vartheta}{2} - \frac{2}{\pi} \sin \vartheta \int_0^{\pi} \frac{H(\vartheta',s) \, d\vartheta'}{\cos \vartheta' - \cos \vartheta} \tag{26}$$

where

$$H(\vartheta',s) = w(x',s) + \int^{x'} \frac{\partial w}{\partial s} \, dx \tag{27}$$

and where $x = -\cos \vartheta$ is the coordinate of the point to which $\overline{\overline{p}}$ is referred and $x' = -\cos \vartheta'$ is the variable of integration.

The lower limit of the integral in equation (27) is arbitrary, so that H is defined except for an additive constant. This arbitrariness does not affect the results because

$$\int_0^{\pi} \frac{d\vartheta}{\cos\vartheta - \cos\vartheta_0} = 0$$

The proof of equation (26) can be given in a manner that is not, however, entirely satisfactory from the mathematical point of view by substituting the expression of equation (16) for w in equations (26) and (27) and verifying that the relation thus obtained agrees with equation (24).

The practical computation of the integral that occurs in equation (26) presents difficulties for the singularity of the function integrated at the point $\vartheta = \vartheta_0$. For cases that are encountered in practice, however, by dividing the chord into a certain number of strips it is found that in each strip H can be represented by a combination of a few terms of the type $\cos n\vartheta$. Hence, to simplify the applications, Söhngen gives the following formula, which in this case permits conducting the computation in closed form:

$$\sin\vartheta \int_0^{\pi} \frac{f\, d\vartheta'}{\cos\vartheta' - \cos\vartheta} = -\frac{\cos n\vartheta}{2} \ln \frac{\left[1-\cos(\vartheta-\vartheta_2)\right]\left[1-\cos(\vartheta+\vartheta_1)\right]}{\left[1-\cos(\vartheta+\vartheta_2)\right]\left[1-\cos(\vartheta-\vartheta_1)\right]} +$$

$$2\sum_{\nu=1}^{n-1} \frac{1}{\nu} \sin(n-\nu)\,\vartheta\,(\sin\nu\vartheta_2 - \sin\nu\vartheta_1) + (\vartheta_2 - \vartheta_1)\sin n\vartheta \tag{28}$$

where

$$f = 0 \quad \text{for} \quad 0 < \vartheta < \vartheta_1$$

$$f = \cos n\vartheta \quad \text{for} \quad \vartheta_1 < \vartheta < \vartheta_2$$

$$f = 0 \quad \text{for} \quad \vartheta_2 < \vartheta < \pi$$

In each case, by means of a few terms of this type, the function H can be expressed and the pressures can therefore be computed as a sum. The computation of the resulting actions involves easy integrations. In order to simplify this part of the computation, Söhngen gives the expression

$$\int_0 \ln\left[1-\cos(\vartheta-\alpha)\right] \sin n\vartheta \, d\vartheta = \frac{1}{n^2} \cos n\vartheta - \frac{\vartheta}{n} \sin n\alpha +$$

$$\frac{2}{n} \sum_{1}^{n-1} \frac{\cos\left[(n-\nu)\vartheta + \nu\alpha\right]}{n-\nu} + \frac{1}{n} (\cos n\alpha - \cos n\vartheta) \ln\left[1-\cos(\vartheta-\alpha)\right]$$

The use of these expressions will be clear from the examples that follow.

14. Examples of application. - Let the expressions of the preceding section be applied to the determination of the instantaneous pressures corresponding to the rotation of the elevator; that is, it is assumed that the forward part of the wing, corresponding to values of ϑ between 0 and ϑ_0, remains immovable while the rear part rotates rigidly about the hinge located at the point of the abscissa $x = -\cos\vartheta_0$. The angle of the elevator is denoted by β (positive downward) and the primes denote the derivatives $\beta' = d\beta/ds$, $\beta'' = d^2\beta/ds^2$. Hence,

$$z = \beta(\cos\vartheta_0 - \cos\vartheta)$$

and therefore, from equation (1),

$$w/V = \beta + \beta' (\cos\vartheta_0 - \cos\vartheta)$$

$$H = w+V \int_{\vartheta_0}^{\vartheta} (\beta'+\beta'' \cos\vartheta_0 - \beta'' \cos\vartheta) \sin\vartheta \, d\vartheta = B_0 + B_1 \cos\vartheta + B_2 \cos 2\vartheta$$

where

$$B_0 = V\left(\beta + 2\beta' \cos\vartheta_0 + \frac{1}{2}\beta'' + \frac{\beta''}{4}\cos 2\vartheta_0\right)$$

$$B_1 = -V\left(2\beta' + \beta''\cos\vartheta_0\right)$$

$$B_2 = \frac{V\beta''}{4}\cos 2\vartheta_0$$

For each of the three terms of the expression of H, equation (28) is applied with $n = 0$, $n = 1$, and $n = 2$, respectively, and with $\vartheta_1 = \vartheta_0$, $\vartheta_2 = \pi$. Making the substitutions yields

$$\sin\vartheta \int_0^\pi \frac{H\,d\vartheta'}{\cos\vartheta' - \cos\vartheta}$$

$$= -\frac{1}{2}\left(B_0 + B_1\cos\vartheta + B_2\cos 2\vartheta\right)\ln\frac{1 - \cos(\vartheta + \vartheta_0)}{1 - \cos(\vartheta - \vartheta_0)} +$$

$$(\pi - \vartheta_0)\left(B_1\sin\vartheta + B_2\sin 2\vartheta\right) - 2B_2\sin\vartheta_0\sin\vartheta$$

On the other hand,

$$A_0 = \frac{2}{\pi}\int_0^\pi w\,d\vartheta = \frac{2(\pi - \vartheta_0)}{\pi}\left(\beta + \beta'\cos\vartheta_0\right) + \frac{2\beta'}{\pi}\sin\vartheta_0$$

There is thus finally obtained from equation (26)

$$\pi\,\bar{p}/2\,\rho V^2 = \left\{\beta(\pi-\vartheta_0) + \beta'\left[\sin\vartheta_0 + (\pi-\vartheta_0)\cos\vartheta_0\right]\right\}\cot\frac{\vartheta}{2} +$$

$$\left[2\beta'(\pi-\vartheta_0) + \beta''(\pi-\vartheta_0)\cos\vartheta_0 + \frac{1}{2}\sin\vartheta_0\right]\sin\vartheta - \frac{\beta''}{4}(\pi-\vartheta_0)\sin 2\vartheta +$$

$$\frac{1}{2}\left[\beta + 2\beta'(\cos\vartheta_0 - \cos\vartheta) + \frac{1}{2}\beta''(\cos\vartheta_0 - \cos\vartheta)^2\right]\ln\frac{1-\cos(\vartheta+\vartheta_0)}{1-\cos(\vartheta-\vartheta_0)}$$

As a second example, the pressures in the case of the stationary gust are computed; that is, the wing is assumed displaced with the velocity, which is constant in magnitude and direction, encountering air layers that move in a vertical direction perpendicular to V with velocities that, at each point of the fixed space, are maintained constant in time. The graph of w along the wing trajectory (shape of the gust) is assumed given and P is a general point of the chord that is indicated by the positions corresponding to $t = t_0$ and $t = t_0 + dt$ in figure 6. For the point considered, the value of $\int_{-1}^{x} w\,dx$ is represented at the first instant by the obliquely hatched area and in the succeeding instant by the same area increased by the horizontally hatched strip and decreased by the vertically hatched part. The intervening variation in the interval considered will be represented, except for infinitesimals of the higher order, by the quantity $(w_1-w)\,ds$. Hence,

$$H = w + \frac{\partial}{\partial s}\int_{-1}^{x} w\,dx = w_1$$

The quantity H is therefore constant for all points of the chord. The same conclusions evidently hold for the point P if the point P has not yet entered the gust. (The only difference with respect to the preceding case is that in this case $w = 0$.) Hence, from equation (26) (the expression for p), the only nonzero term will be $\cot\vartheta/2$. It is therefore concluded that for the wing that crosses a stationary gust, whatever the form of the gust, the pressures are distributed proportionally to $\cot\vartheta/2$. The same result

could also be deduced by considering equation (18), for which, in this case, the first member should be zero from the hypothesis that w does not vary in time. The result given by Küssner that the aerodynamic actions on the wing that enters a stationary gust have a resultant passing through the focal point is thereby obtained. This result holds for the case where the values of w do not vary locally; in general, in agitated air the velocities vary rapidly with time.

By following the analysis of the problem of the stationary gust, the case of the elementary gust (the step diagram in fig. 7) is first considered. During the time in which the front of the gust lies within the wing,

$$A_0 = \frac{2}{\pi}\int_0^{\pi} w \, d\vartheta = \frac{2\vartheta'}{\pi}\Delta w$$

$$A_1 = \frac{2}{\pi}\int_0^{\pi} w \cos\vartheta \, d\vartheta = \frac{2 \sin\vartheta'}{\pi}\Delta w$$

$$\bar{w} = \frac{\vartheta' - \sin\vartheta'}{\pi}\Delta w$$

where $x' = -\cos\vartheta'$ is the abscissa of the gust front. When the entire wing is enveloped by the velocity Δw,

$$A_0 = 2\,\Delta w \qquad A_1 = 0$$

The instantaneous pressures are therefore represented by

$$\pi\bar{\bar{p}} = 2\rho V\,\Delta w\,\vartheta' \cot\frac{\vartheta}{2} \text{ in the first case,}$$

and by

$$\bar{p} = 2\rho V\,\Delta w \cot\frac{\vartheta}{2} \text{ in the second.}$$

For the computation of equation (23), only during the phase of the crossing of the gust front is $d\overline{w}$ different from zero, and there it has the value

$$d\overline{w} = \frac{\Delta w}{\pi}(1-\cos\vartheta')\,d\vartheta' = \frac{\Delta w}{\pi}\sqrt{\frac{1+x'}{1-x'}}\,dx'$$

If s denotes the distance of the midpoint of the wing at the actual position from the gust front, for which the values of p are measured, at this instant

$$-\pi\,\overline{p}/\rho V\,\Delta w\cot\frac{\vartheta}{2} = 2\int_{-1}^{1} R(s-x')\sqrt{\frac{1+x'}{1-x'}}\,dx'$$

The pressure may therefore be computed as a function of R, in the case of the gust, by means of a simple integration. The resultant pressures may therefore be expressed in the form

$$p = \overline{p} + \overline{\overline{p}} = \rho V\,\Delta w\,R_1\cot\frac{\vartheta}{2} \tag{29}$$

where R_1 is a function of the distance $s_1 = s + 1$ of the front of the gust from the leading edge of the wing. The function is evaluated in table 2; the values are obtained from reference 13. When s_1 is negative, then evidently $R_1 = 0$.

From the solution relative to the elementary case, the solution for a gust of any shape can be obtained by substituting in equation (29), in place of $R_1\,\Delta w$, the quantity $\int_0^w R_1\,dw$ (taken as the sum of the products of all the variations that the values of w undergoes for the corresponding values of R_1).

15. Profile in harmonic oscillatory motion. - The same relations permit solving the case of harmonic motion. Assume V constant. Using the complex variable notation yields

$$w = We^{i\Omega t}$$

where Ω is the frequency and W is a function of ϑ but not of t. Equation (26) for this case yields

$$\pi \bar{p}/2\rho V e^{i\Omega t} = \cot\frac{\vartheta}{2}\int_0^{\pi} W\,d\vartheta - \sin\vartheta\int_0^{\pi}\frac{W(\vartheta')\,d\vartheta'}{\cos\vartheta' - \cos\vartheta} -$$

$$\omega\sin\vartheta\int_0^{\pi}\frac{d\vartheta'}{\cos\vartheta' - \cos\vartheta}\int_0^{x'} W(x)\,dx \tag{30}$$

where

$$\omega = i\frac{\Omega}{V} \qquad x' = -\cos\vartheta'$$

For $\bar{w}$,

$$\bar{w} = \bar{W}e^{i\Omega t} = \bar{W}e^{\omega s} \quad (\bar{W}\text{ constant})$$

(For the position $s - \sigma$,

$$\bar{w}(s-\sigma) = \bar{w}(s)e^{-\omega\sigma} = \bar{W}e^{i\Omega t}\cdot e^{-\omega\sigma}$$

(Hence, from equation (23"),

$$\bar{p}/2\rho V\bar{W}e^{i\Omega t}\cot\frac{\vartheta}{2} = \omega\int_0^{\infty} R(\sigma)e^{\omega\sigma}\,d\sigma \tag{31}$$

The same problem can be attacked by making use of the general relations initially given. By procedures that are developed in numerous publications and that, in part, are herein presented, relations are arrived at that are equivalent to equations (30) and (31). In this manner, which is more rapid than direct computation, it is

found that the quantity that enters the second member of equation (31), a function of the reduced frequency $\overline{\omega} = \Omega L/2V$, is identified with the quantity denoted by λ in references 2 and 9 and is therein expressed by means of the Hankel function of parameter $\overline{\omega}$:

$$\lambda = \frac{H_0^{(2)}}{H_0^{(2)} - iH_1^{(2)}}$$

Reference 14 gives a tabulation of this function, which is rather important in the study of the aerodynamic phenomenon for the oscillating wing and which is reproduced in table 3. Küssner uses instead the function T correlated with λ by the relation

$$T = 1 - 2\lambda$$

whereas in the paper by Kassner and Fingado (reference 15), the function $P = 1 - \lambda$ is used with argument $V = \overline{\omega}/2$.

American publications use the function C introduced by Theodorsen, which has the same definition as $\overline{P}$.

By means of equations (30) and (31), the pressures are easily computed for any type of oscillation (for example, translatory, rotational of the entire wing, or rotational of the flap). The coefficients of the aerodynamic actions have been determined in various publications. A complete tabulation for the case of a wing with a flap hinged at the forward edge is found in reference 16, the computations for which were developed by the national institute for theoretical applications on the basis of the formulas of Kussner. In a recent publication by Kussner (reference 17), the case of the profile with a flap and with a tab hinged to the flap is treated. The fact that the hinges of the two movable parts can be retracted with respect to the corresponding leading edges is taken into account.

16. Analysis of pressures on airfoil in motion in nonperturbed air. - Equations (27) and (28) are considered, with the assumption that the values of w are due only to the motion of the wing and can therefore be expressed by equation (1). It is first assumed that V is constant. Then

$$H = w + \frac{1}{V}\int^x \frac{\partial w}{\partial t}\,dx = V\frac{\partial z}{\partial x} + \frac{\partial z}{\partial t} + \frac{1}{V}\int^x \frac{\partial^2 z}{\partial t^2}\,dx + \frac{\partial}{\partial t}\int^x \frac{\partial z}{\partial x}\,dx$$

Inasmuch as adding a constant to the value of H does not change the result of equation (26),

$$\int^{x} \frac{\partial z}{\partial x}\, dx = z$$

and therefore

$$H = V \frac{\partial z}{\partial x} + 2 \frac{\partial z}{\partial t} + \frac{1}{V}\int^{x} \frac{\partial^2 z}{\partial t^2}\, dx \tag{32}$$

The first term in the second member together with the corresponding term contained in A_0 gives rise to the pressures that are denoted by p_0:

$$\pi p_0/2\rho V^2 = \cot \frac{\vartheta}{2} \int_0^{\pi} \frac{\partial z}{\partial x}\, d\vartheta' - \sin \vartheta \int_0^{\pi} \frac{\partial z}{\partial x} \frac{d\vartheta'}{\cos \vartheta' - \cos \vartheta} \tag{33}$$

where $\partial z/\partial x$ is computed at the point of integration $x' = -\cos \vartheta'$. These pressures are those that are obtained if the wing in the actual configuration is under the conditions of steady motion.[6]

The second term in the second member of equation (32) with the corresponding term contained in A_0 gives the pressures that are denoted by p_1:

$$\pi p_1/2\rho V = \cot \frac{\vartheta}{2} \int_0^{\pi} \frac{\partial z}{\partial t}\, d\vartheta' - 2 \sin \vartheta \int_0^{\pi} \frac{\partial z}{\partial t} \frac{d\vartheta'}{\cos \vartheta' - \cos \vartheta} \tag{34}$$

These actions, which are proportional to the vertical velocities of the points of the wing, have the characteristic of damping forces and can, in part, be interpreted by kinematic considerations. Thus, if the wing is displaced without rotation with vertical velocity v,

---

[6]In fact, substituting in this expression the value of u/V given by equation (37) of reference 11 for $\partial z/\partial x$ and developing the computation yields the value of $\gamma = p/\rho V$ expressed by equation (31) presented herein.

the intuitive result that the wing is in the same condition as if it were at an angle of attack v/V is obtained from equation (34). Also, in regard to the effect of a torsional motion, a qualitative interpretation of p_1 can be given. If the wing is, for example, in diving rotation, it behaves with respect to the fluid as though it were curved upward. It is seen from such considerations that the focal moment that arises from this effect is turned in the opposite sense to the angular velocity (damping action). This consideration of the dynamic curvature has been put at the basis of the numerous approximate investigations on the aerodynamic coefficients of the vibrating wing (reference 9). These considerations would lead in substance to the computation of the values of p_1 with the same relation (equation (33)) that holds for p_0, in which $\partial z/V\,\partial t$ is substituted for $\partial z/\partial x$. This procedure leads to results that are quantitatively in error because it is necessary to halve the second term in the expression of p_1.

The third term of equation (32) gives rise to the pressures p_2:

$$p_2/2\rho = \sin\vartheta \int_0^{\pi} \frac{d\vartheta'}{\cos\vartheta - \cos\vartheta'} \int_{-1}^{x'} \frac{\partial^2 z}{\partial t^2}\,dx \tag{35}$$

These pressures, which result independently of the vertical accelerations of the points of the wing, represent an inertia effect of the mass of the circulating air. As evident from equation (35), the pressures p_2 do not depend directly on the local values of the accelerations, but on the entire distribution. Thus, in the case of the oscillation of a flap, although the forward part of the wing remains fixed, there are pressures over the entire chord. There can therefore, be no distribution of masses that are apparently capable of reproducing the inertia effect of the medium.

The result of equation (35) is of interest for the rigid motion of the airfoil. In the case of translational oscillation, pressures are obtained that are distributed proportionately to $\sin\vartheta$ and give rise to the same resultant as though the mass of the cylinder of air circumscribed about the wing underwent the motion of the wing. It is easy in such a case to compute also the actions on a part of the chord. In the case of the rotational oscillation of the profile about the mean point, the pressures of inertia still correspond to a

system of masses distributed according to $\sin \vartheta$, but the total mass in this case is equal to one-half that of the preceding case. The rigid wing thus undergoes in its motion an inertia action that can be thought of as reduced to two masses, each of a value equal to one-half of the mass of the circumscribed cylinder of air concentrated at a distance $L/\sqrt{32}$ from either side of the mean point (always in regard to the computation of the resultant actions).

It is observed that the pressures p_2 have values that are independent of the velocity of advance and must therefore be sustained in air at rest. For such conditions, the results would not rigourously apply because the assumption of the smallness of the perturbations, as compared with V, does not hold. The results nevertheless agree with those that, for any particular case, have been obtained without the preceding assumptions and moreover apparently reproduce sufficiently well the actual phenomenon as it is found from some measurements by Cicala, in which the periods of the oscillation of a wing model in rarefied air and at normal pressure were compared. In the case of the phenomenon of the wing vibrations, the inertia pressures are not of great importance, whether because the additional masses represent a small part of the mass of the structure or because the previously described actions, which exist independently of the velocity V, can be directly included in the computation if measurements of the mass of the structure are made by dynamic procedures.

Equation (35), which permits computing the inertia pressures in closed form, is derived in reference 2, and the expression for p_1 is contained in the same reference. The expression for p_1 presents a certain difference when compared with equation (34) in that it contains a term that in the preceding scheme is added to the transitory pressure.

If the velocity V is not constant in the expression for H, there is derived from the term $\frac{1}{V}\int^x \frac{\partial w}{\partial t}\,dx$, in addition to the quantity expressed by equation (32), the term $\frac{dV}{dt}\int^x \frac{\partial z}{\partial x}\,dx$, which because H is defined except for a constant is written $z\,dV/dt$. Hence, to the preceding computed pressures there are added the pressures p_3, given by

$$p_3/2\rho\,\frac{dV}{dt} = \sin\vartheta \int \frac{z\,d\vartheta'}{\cos\vartheta - \cos\vartheta'}$$

From this relation, there is obtained, for example, the following result: If the rectangular wing is displaced with velocity V not constant and with angle of attack α, which is constant, there is a force normal to the flight path represented by the distribution

$$p_3 = 2\rho\alpha \frac{dV}{dt} \sin \vartheta$$

which corresponds to the mass of the cylinder of air circumscribed about the wing subjected to the acceleration dV/dt.

It is emphasized that the pressures $\bar{\bar{p}} = p_0+p_1+p_2+p_3$ are still added to the transitory pressures, depending on the values that the quantity $\bar{w}$ has assumed in the preceding instants. If the values of w are distributed linearly over the chord, $\bar{w}$ represents the value of w at the neutral rear point. The instantaneous pressures have the resultant passing through the focal point.

The decomposition of the total pressures into instantaneous and transitory pressures has no absolute character in the sense that a part of the instantaneous pressures can be combined with the transitory (not vice versa, because a term containing the history of the motion is clearly distinguishable from the terms depending on the actual values). It nevertheless appears that the definition given herein is more natural because in the limiting case of steady motion the actions resulting from the group comprised of the instantaneous and the transitory pressures become zero.

17. Remarks on treatment of unsteady motion of wing in two-dimensional case. - The first investigator to study the aerodynamic problem of the oscillating wing was Birnbaum, who made use of the concept indicated in Section 6 of the splitting of the circulation about the wing into bound and free components. Equation (7) is integrated for harmonic motion. By use of the complex variable notation, in this case,

$$\gamma = \bar{\gamma}(x)\, e^{i\Omega t}$$

$$\epsilon = \bar{\epsilon}(x)\, e^{i\Omega t}$$

As is easy to verify, equation (7) is obtained if

$$\bar{\epsilon}(x) = -\omega e^{-\omega x}\int^{x} \gamma(x') e^{\omega x'} dx' \tag{36}$$

where

$$\omega = i\Omega/V$$

Inasmuch as the free circulation is zero in correspondence with the leading edge of the profile (if no other sources of vortices occur upstream of the wing), in order that $x = -1$ and $\epsilon = 0$, the lower limit of the integral in equation (36) must be equal to -1. For the points of the wake, the integration is evidently limited to the chord, because γ is zero outside the wing.

On the basis of these results equation (8) assumes the form

$$2\pi w_0 = \int_{-\infty}^{\infty} \frac{(\bar{\gamma}+\bar{\epsilon})\, dx'}{x'-x} = \int_{-1}^{1} \frac{\bar{\gamma}\, dx'}{x'-x} -$$

$$\omega \int_{-1}^{1} \frac{e^{-\omega x'}\, dx'}{x'-x} \int_{-1}^{x'} e^{\omega x''}\, \bar{\gamma}(x'')\, dx'' - \omega \int_{1}^{\infty} \frac{e^{-\omega x'}\, dx'}{x'-x} \int_{-1}^{1} e^{\omega x''}\, \bar{\gamma}(x'')\, dx''$$

where x' and x'' are variables of integration and $w = w_0 e^{i\Omega t}$.

Birnbaum takes into account the condition of separation by expressing γ by means of a combination of functions that satisfy this condition. The solution is sought in the form of a series expansion in powers of the reduced frequency $\Omega L/2V$. The series converge rather slowly so that the results of Birnbaum are applicable only to rather low values of the reduced frequency.

Wagner (reference 12) considered the problem of unsteady motion of the wing of infinite span. In the first part of reference 12, the treatment refers to the case in which w is constant over the entire chord but variable in time, a case of fundamental importance, as has

been stated in Section 10. Making use of the condition of separation that imposes the circulation of the wing capable of giving rise to a finite velocity at the trailing edge, Wagner arrived at an integral equation that defines the circulation in the wake of the wing. With a procedure based on the moment theorems, Wagner gave an expression for the computation of the lift and of the moment on the wing on the basis of the circulation in the wake. In particular, the computations were developed for the take-off motion of the wing. The case of rotation of the wing about a point of the chord was also considered.

The problem of the unsteady motion of a wing was also considered by Glauert. In an initial paper (reference 18), he made use of the hypothesis that the circulation remains constant, a hypothesis that considerably limits the importance of the results.[7] In a succeeding paper (reference 20), he took into account the variation of the circulation. In contrast to Birnbaum, Glauert sought to obtain directly the total circulation of the wing, which is divided into a part that would correspond to the case in which the vortex wake would be absent, and into a circulation induced by the vortices downstream of the wing. It is simple to show the equivalence of the relations assumed by Glauert for computing the lift P and the moment M with respect to the center point of the wing with the relations that are obtained on the basis of the bound circulation. From equation (4),

$$\left.\begin{aligned} P/\rho V &= \int_{-1}^{1} (g-\epsilon)\, dx = K - \int_{-1}^{1} \epsilon\, dx \\ M/\rho V &= \int_{-1}^{1} (g-\epsilon)\, x\, dx \end{aligned}\right\} \tag{37}$$

Considering that for $x = -1$, $\epsilon = 0$, and for $x = 1$, according to equation (3), $V\epsilon = -\, dK/dt$, integration by parts yields

$$\int_{-1}^{1} \epsilon\, dx = -\frac{dK}{V\, dt} - \int_{-1}^{1} x \frac{\partial \epsilon}{\partial x}\, dx$$

$$\int_{-1}^{1} \epsilon x\, dx = -\frac{1}{2}\frac{dK}{V\, dt} - \frac{1}{2}\int_{-1}^{1} x^2 \frac{\partial \epsilon}{\partial x}\, dx$$

---

[7]Lamb (reference 19) also treated the problem with the same restriction.

With the aid of these relations, equations (37) become

$$\left.\begin{aligned} P/\rho &= VK + \frac{dK}{dt} + \frac{\partial}{\partial t}\int_{-1}^{1} gx\,dx \\ M/\rho &= V\int_{-1}^{1} gx\,dx + \frac{1}{2}\frac{dK}{dt} - \frac{1}{2}\frac{\partial}{\partial t}\int_{-1}^{1} gx^2\,dx \end{aligned}\right\} \tag{38}$$

considering that, according to equation (5),

$$\frac{\partial \epsilon}{\partial x} = -\frac{\partial g}{\partial t}$$

and that the sign of the differentiation can be taken outside the integrals because the limits are independent of the time. Equations (38), which are the equations used by Glauert, serve for the computation of the resulting aerodynamic actions but do not lend themselves directly to the determination of the pressure distribution, a computation that is necessary if it is desired to know the actions on part of the wing (flap). The equations obtained by Wagner are also subject to the same limitation.

With the values of g expressed with the aid of the instantaneous characteristics of the rigid motion of the wing on the basis of the circulation existing in the wake, Glauert determined the lift and the moment with the aid of equations (38) and arrived at expressions agreeing with those of Wagner. For harmonic motion, in which the circulation is distributed in the wake according to the sinusoidal law, the solution of the problem reduces to the determination of certain integrals that Glauert obtained by approximate procedures that limit the results to values not much higher than the reduced frequency.

On the basis of the work of Birnbaum, Küssner (reference 8) again took up the problem of the oscillating wing, assuming for the bound circulation the functions that are used for steady motion (reference 11, p. 184). The corresponding w, expressed as a function of x, consists of a polynomial and of a trigonometric function multiplied by a factor depending on $\bar{\omega}$, which Küssner computed by means of a

power series. After rather laborious computations, Küssner obtained the pressure distribution on the wing corresponding to the motion of translational or rotational oscillation of the wing and also, approximately to the motion of the flap, for which he derived the coefficients of the aerodynamic actions for the field of variation of $\bar{\omega}$, which is of interest for the phenomenon of wing vibration.

Connected with the investigations of Wagner and Glauert is the theory developed by Theodorsen (reference 4), in which there are separately determined by use of the methods of conformal transformation the potential function on the wing for simple fundamental motions of the wing with flap. From the potential function, Theodorsen determined the pressures with the aid of the Bernoulli's equation generalized for nonsteady motion (reference 11, p. 38):

$$\frac{p}{\rho} + \frac{v^2}{2} + \frac{\partial\varphi}{\partial t} = 0 \tag{39}$$

(where φ is the potential function).

In the computation of the difference in the pressure between the lower and upper surfaces of the wing, it is necessary to consider, according to equation (39), the quantity derived from the variation with time of the difference in potential existing between the two surfaces of the wing. This difference is measured from the circulation of the velocity, which is determined by following a path (fig. 3) that joins the two points situated on the opposite surfaces and passes, always in the proximity of the wing, through the forward edge of the wing, thus obtaining the quantity $\int_{-1}^{x} g\,dx$; it is thus seen that the second term in the second member of equation (2) represents the corresponding term in $\partial\varphi/\partial t$ in equation (39).

Theodorsen's treatment of the problem represents a marked advance with respect to the preceding work because it determines the distribution of the pressures on the wing and hence, in contrast to the work of Glauert and Wagner, permits the computation of all the coefficients of the aerodynamic actions for the wing with a flap. Also, because the integrals with which the effect of the vortical system of the wake is computed are solved by means of Hankel functions, all restrictions on the value of the reduced frequency are thus eliminated by use of the existing tabulations.

Independently of Theodorsen, and almost simultaneously, Cicala arrived at the solution of the problem of oscillatory motion of a deformable wing with any law by the same method followed by Birnbaum and Küssner. In reference 9, it is proven that a class of functions exists, depending on the reduced frequency, that represents the distribution of the bound vortices, which correspond to the velocity w distributed over the wing by a particularly simple law. The first of these functions, corresponding to constant w on the chord, contains the Hankel functions of the reduced frequency; the others are essentially represented by the γ_n of equation (14) and give rise to the values of w_n in equation (12). In this manner, relations were obtained by means of which the coefficients of the Fourier series of the bound circulation on the wing can be computed in closed form as a function of the coefficients of the series for w. The coefficients of the aerodynamic actions for the wing with flap were thus computed. In a succeeding report (reference 2), it was also shown how the pressures depending on the second power of the reduced frequency (inertia pressures) and those proportional to the first power (pressures p_1) could be computed in closed form without developing them into Fourier series.

At the same time, Küssner arrived at the solution of reference 9 by a procedure described in reference 21, some results of which were anticipated in reference 22. The general case of nonsteady motion was also treated in reference 21, where the discontinuous motion was studied on the basis of the solution for the harmonic motion with the use of the Fourier integral. The case of a stationary gust was studied and tests were conducted (reference 23) confirming the result obtained that the focal moment remains zero during passage through the gust. The solution of Küssner was used by Dietze (reference 24) to compute the resultant of the actions on the flap (in the preceding papers only the hinge moments were computed); it was also used by Krall (reference 16) to elaborate, with the aid of the National Institute for Applied Computations, the tables of the aerodynamic coefficients for the oscillating wing, and was used by Dietze again (reference 25) for the computation of the coefficients for the wing with a flap and a tab hinged to the flap.

Kassner and Fingado (reference 15) also succeeded in computing the actions corresponding to the oscillatory rigid motion of the wing, making use of the Wagner's expressions by which, in the case of harmonic motion, the evaluation of the integrals relative to the effects of the vortices in the wake was investigated with the aid of Hankel functions by Borbély (reference 26). With the aid of the Wagner's

expressions, Ellenberger computed the resultant actions on the wing for a flap rotating according to a general function of time (reference 27).

In a summarizing note, Jaeckel (reference 28) established a coordination between the procedures of Glauert, of Lamb, and of Birnbaum-Küssner for the solution of unsteady motion of wings and considered also the case of the wing with a variable chord. Jaeckel also published a systematic derivation (reference 29) of the results that were given with rather synthetic justification by Küssner. A clear review of the theories on the wing in unsteady motion was given by Lyon (reference 30).

The results of the preceding studies, with some further development, are treated by von Kármán and Sears (reference 7); a derivation procedure is developed that presents in an intuitive form the mathematical fundamentals of the investigation. The computation is restricted to the determination of the lift and the aerodynamic moment, which are computed with the aid of the expressions, respectively,

$$P/\rho = \frac{d}{dt} \Sigma \Gamma_i X_i \tag{40'}$$

$$M/\rho = \frac{1}{2} \frac{d}{dt} \Sigma \Gamma_i X^2_i \tag{40''}$$

The second member of the first expression represents the rate of variation of the moment of circulation of the system measured with respect to a fixed point; in an interval of time dt, this moment should vary as the bound vortices are displaced by the amount $V\,dt$, while the position of the free vortices and therefore the moment with respect to the fixed axis have not changed. The total variation will therefore be given by the product of the total bound circulation and $V\,dt$ and therefore, when multiplied by the density and divided by dt, will give the lift. By analogous reasoning, the second of equations (40) is verified. Thus, the square of the distance from the fixed point varies by the amount $2VX\,dt$ for the bound vortices while it remains constant for the free vortices. Hence, the variations of the second member of equation (40") will be represented by the moment of the bound circulation or the aerodynamic moment except for the factor ρ.

From these relations, von Kármán and Sears derived expressions for the lift and the aerodynamic moment, which present a better generalization than those of Glauert inasmuch as they can also be applied to

the deformable profile; but the relations still do not permit computations on parts of the wing. The authors divided the total circulation into a part that would be obtained in the absence of the vortex wake (so-called quasi-stationary system) and into the induction of the vortices of the wake. The case of the general motion of the profile and of a stationary gust is also considered.

Garrick (references 31 and 32) brought out the relation (Laplace transform) that exists between the Wagner function, which gives the circulation by the elementary discontinuity, and the function that holds for the harmonic motion and proposed the use of approximate expressions to represent the function of Wagner, which would be useful in the analytic solution of various problems of unsteady motion.

Possio, making use of the acceleration potential, considered the problem of the discontinuous motion of a wing (reference 10) and the case of the stationary gust.

In a recent publication (reference 17), Küssner and Schwarz indicate the relations with which the pressures on the profile can be computed without making use of Fourier series but using integrations. These equations were applied to the determination of the aerodynamic coefficients for the wing with flap and hinged tab on the flap, when the case is considered in which the hinges are set back relative to the leading edge of the moving parts. The same relation for the computation of the pressures on the oscillating wing was derived in a different manner in a report by Schwarz (reference 5), in which a clear and rigorous derivation of the known solution of the aerodynamic problem of the oscillating wing is developed.

In reference 13, Küssner gives the general solution of unsteady motion in the two-dimensional case and the functions of Wagner and those relative to the aerodynamic actions produced by a gust are computed with greater precision.

The general case of unsteady motion has also been treated in a report by Söhngen (reference 6). The solution is put in substantially the form indicated in Section 13.

PART II. - WING OF FINITE ASPECT RATIO

The relations that connect the velocities induced by the vorticity of the inductor system of a wing of finite aspect ratio are derived herein and a form for these expressions is sought that lends itself to a future refinement of the investigation that, up to the present, has been conducted with approximate procedures. An evaluation is then given of the various approximations that have been used in the theory of the finite wing in unsteady motion.

The consideration is restricted to essentially rectilinear motion of the lifting surface; that is, it is assumed that the velocity of the points of the wing give small deviations relative to a mean value V, which maintains its direction unchanged with respect to the motionless fluid at infinity. It is assumed that V is small compared with the velocity of sound. The origin of the orthogonal axes x, y, and z is located at the point at which the induced velocity is measured (point of induction). The x-axis is taken parallel to V and in opposite direction; the y-axis is normal to the x-axis and is contained in the fundamental plane that, during the motion, is at a very small distance from the points of the lifting wing, which is assumed to be of infinitesimal thickness and curvature; the z-axis is perpendicular to the x- and y-axes and directed downwards. The vortices having an axis parallel to the x-axis (longitudinal vortices) and to the y-axis (transverse vortices) are considered positive if turned in the sense that carries the positive directions of x and y on z. In the middle section of the wing is located the origin of the ξ- and η-axes parallel to x and y. The semispan of the wing is denoted by b, so that for the points $-b \leq \eta \leq b$, ξ_0 and η_0 denote the coordinates of the point of induction, hence

$$x = \xi - \xi_0$$

$$y = \eta - \eta_0$$

Let $\xi_n(\eta)$ be the equation of the leading edge; $\xi_p(\eta)$ the equation of the trailing edge; $\xi_p - \xi_n = L$ the chord; Ω the pulsation;

ω the imaginary factor $i\Omega/V$; $\bar{\omega}$ the reduced frequency $\Omega L/2V$; $\int_L$ the integral taken over the chord from the leading to the trailing edge. The other symbols are defined in the text or in Part I.

18. Inductor elements in tridimensional case. - Let P (fig. 8) be a point of the wing that moves relative to the fluid with vector velocity $\underline{v}$ of magnitude v and having any direction; the linear element dl through P normal to $\underline{v}$ supports the bound vorticity Γ; that is, supports the aerodynamic action $\rho v \Gamma\, dl$. In the interval dt that precedes the actual instant, the point P starting from P' is displaced by the segment $d\sigma = v\, dt$. The total inductor is then changed in that the bound vorticity element has come to occupy the position 1-2 from the position 3-4, leaving behind it free vortices and simultaneously creating the two longitudinal elements 2-3 and 1-4 of equal circulation Γ. There is thus added to the preexisting inductor system a closed vortex element 1-2-3-4; on the side 3-4, which at the instant t there exists the vorticity element of intensity $-d\Gamma$ liberated from the bound vortex, it may be assumed that there simultaneously exist the vorticity $\Gamma - \frac{d\Gamma}{d\sigma}\, d\sigma$, which existed at the time $t-dt$ and the element of intensity Γ with oppositely directed sign constituting the fourth side of the circuit 1-2-3-4.

With the aid of the formula of Biot, it is found by simple computation that the closed vortex element induces, at a point O at distance r from P, a velocity that, except for infinitesimals of the higher order, may be written as[8]

$$d^2w = -\Gamma\, dl\, d\sigma/4\pi r^3$$

Whatever happened in the interval dt occurred in all the preceding time starting from the instant at which a force on the lifting element has arisen; that is, since an element of the bound vorticity was created. In the problems that ordinarily present themselves, it is assumed that $\underline{v}$ always has the same direction parallel to the x-axis, or more precisely, the deviations with respect to this direction are considered sufficiently small. Let $d\sigma$ and dl therefore

---

[8]The symbol d^2 is used to indicate a quantity that, divided by the product $\Delta l\, \Delta\sigma$, has a finite limit when these elements approach zero. With the assumed signs, w is directed upward and is therefore negative.

be parallel to x and y, respectively. The symbol σ denotes the distance measured from the point P of coordinates x and y, parallel to x, assuming that the circulation Γ on the element of the lifting surface considered is expressed as a function of σ. Summing the effects of the closed vortex elements created in the preceding time, the velocity at O is obtained:

$$dw = -\frac{dy}{4\pi}\int\frac{\Gamma\, d\sigma}{r^3} = -\frac{dy}{4\pi}\int_0^\infty \frac{\Gamma\, d\sigma}{\sqrt{(x+\sigma)^2 + y^2}^3} \tag{41}$$

The velocity induced by the bound-vortex element and by the system generated by it for $r \neq 0$ is identical to that which is obtained on the basis of the concept of the acceleration potential and which is defined as the field of the pressure dipoles (reference 33).

The particular case of steady motion (Γ constant) is considered. Inasmuch as

$$\int_0^\infty \frac{d\sigma}{\sqrt{(x+\sigma)^2 + y^2}^3} = \frac{1}{y^2}\left(1 - \frac{x + \sigma_1}{\sqrt{(x+\sigma_1)^2 + y^2}}\right) \tag{42}$$

a quantity that is denoted by $f(x+\sigma_1,y)$, then from equation (41),

$$-4\pi\, dw = \Gamma f(x,y)\, dy \tag{43}$$

where dw denotes the velocity induced by the elementary horseshoe vortex of frontal side dy and circulation Γ. The velocity (fig. 9b) induced by the semivortex 2∞ is $\frac{1}{y}\left(1 - \frac{x}{\sqrt{x^2 + y^2}}\right)$ and therefore, summing the velocity corresponding to the other semivortex, which has the opposite sign to the first, there is obtained, except for infinitesimals of higher order, the quantity

$$dy \cdot \frac{\partial}{\partial y}\left[\frac{1}{y}\left(1 - \frac{x}{r}\right)\right]\Gamma = dy\left[-\frac{1}{y^2}\left(1 - \frac{x}{r}\right) + \frac{x}{r^3}\right]\Gamma$$

Adding to this quantity the velocity corresponding to the frontal segment yields the value of dw given in equation (43). The equivalence, which in this case holds between the inductor system of the pressure dipole and the elementary horseshoe vortex, can also be seen by considering that the sides parallel to y of the continuous vortex circuits (indicated by the small circles in fig. 9(a)) are canceled if Γ has the same value for all. This inductor element is called a bivortex and a section of it closed in front and behind is called a segment of a bivortex.

Making use of equation (42) and integrating by parts yields, from equation (41),

$$- 4\pi\, dw = \Gamma\, f(x,y)\, dy + dy \int_0^\infty \frac{d\Gamma}{d\sigma} f(x+\sigma,y)\, d \qquad (44)$$

The operation that leads from equation (41) to equation (44) transforms the inductor system constituted by the closed circuits into a system of bivortices: a generating bivortex originating on the wing, denoted as a bound bivortex, and a row of free vortices. In a distance $d\sigma$ of the wake of the bound bivortex, free bivortices originate the circulation of which is represented by the variation that the intensity of the bound bivortex has undergone in passing through the distance $d\sigma$; that is, $\frac{d\Gamma}{d\sigma} d\sigma$.

For harmonic motion,

$$\Gamma = \overline{\Gamma} e^{i\Omega t}$$

where $\overline{\Gamma}$ is constant and Ω is the frequency of the motion. In this case, V is always assumed constant. The circulation of element 12 at the time in which the point P of the wing was set back with respect to the actual position by the amount σ is represented by

$$\Gamma(\sigma) = \Gamma e^{-i\Omega\sigma/V}$$

that is, with respect to the actual circulation Γ, a lagging phase shift represented by $i\Omega\sigma/V = \omega\sigma$. Making use of this result and denoting by $\hat{w}\Gamma\, dy$ the velocity induced by the bound bivortex and by the system of the wake in the case of harmonic motion yield

$$- 4\pi\hat{w} = \int_0^\infty \frac{e^{-\omega\sigma}\, d\sigma}{\sqrt{(x+\sigma)^2 + y^2}^3} \tag{45}$$

By setting

$$\bar{x} = \Omega\, x/V \qquad \bar{y} = \Omega\, y/V \qquad \bar{\sigma} = \Omega\sigma/V$$

equation (45) can be written in the form

$$4\pi\hat{w} = \omega^2\, \Phi \tag{46}$$

where Φ is the function of two variables $\bar{x}$ and $\bar{y}$ defined by the relation

$$\Phi\ (\bar{x},\bar{y}) = \int_0^\infty \frac{e^{-i\bar{\sigma}}\, d\sigma}{\left[(\bar{x}+\bar{\sigma})^2 + y^2\right]^{3/2}} \tag{46a}$$

For $\bar{x} = 0$, this function has been computed by Müller (reference 34, p. 36). For $\bar{x} \neq 0$,

$$\Phi\ (\bar{x},\bar{y}) = e^{i\bar{x}}\left[\Phi(0,\bar{y}) - \int_0^{\bar{x}} \frac{e^{-iu}\, du}{(u^2+\bar{y}^2)^{3/2}}\right]$$

With the aid of this relation, which is easily obtained from equation (46a), the computation is reduced to the tabulated function and to an integration between finite limits that can be carried out by graphical or numerical methods. The computation of Φ was carried out for $\bar{y} = 2$. When

$$\Phi = \Phi' + i\Phi''$$

there are plotted as abscissas and ordinates in figure 10 the real and imaginary parts Φ' and Φ'' of the function and the curve with

the values of $\bar{x}$ drawn. This curve serves for the computation of the velocity induced by the pressure dipole at the points of a section at distance $y = 2V/\Omega$ from the inductor elements. The point $\bar{x} = 0$ is at the origin of the dipole. The points that are found upstream correspond to the positive values of $\bar{x}$. For this segment, the values of $\hat{w}$ decrease continuously but all have slightly different phases. Proceeding toward the downstream region, the points shifted back with respect to the front of the bivortex generator ($\bar{x} < 0$) encounter velocities that vary little in magnitude but relatively more in phase. It is evident that at a great distance from the origin the velocities vary on the parallel considered by a sinusoidal law and therefore the representative point of figure 10 for negative values of x increasing in absolute value will approach a certain limiting circle with center at the origin.

19. Correction of divergent expressions. - The expressions of the preceding section are sufficiently well adopted for the computation of the velocities corresponding to the inductor system of a wing. Special methods are required, however, for the points of infinity that are presented by the functions under the integral sign present.

The case of steady motion is first considered. A bound vortex filament AB (fig. 11(a)) of circulation Γ varying from point to point is considered and with this filament is associated the system of longitudinal vortices that is shed from the points of AB according to the condition of Helmholtz. The velocity that these elements induced at a point O, which is outside the vortex wake of the filament AB, can be computed by means of the relation

$$- 4\pi w = \int_B^A \Gamma f(x,y)\, dy \tag{47}$$

where x and y are the coordinates of a point of the filament AB at which Γ is the circulation. This expression reduces the inductor elements to a system of bivortices that originate on the filament AB (scheme of fig. 11(b) for $\Delta \rightarrow 0$). The demonstration of this equation is given in reference 35. An intuitive justification is obtained from figure 11 (b). The segments of the dotted vortices in the limit reproduce the effect of the generator filament AB, whereas the other longitudinal elements constitute the system of the marginal vortices; each pair of contigous elements function as a single inductor element of circulation equal to the difference of the circulations of the two elements that compose it.

This expression is applied to an indefinite vortex of unit circulation at a distance x_0 from the point of induction. If x_0 is positive, f always remains finite. In fact,

$$\lim_{y \to 0} \frac{1}{y^2}\left(1 - \frac{x_0}{\sqrt{x^2{}_0 + y^2}}\right) = \frac{1}{2x^2{}_0}$$

If x_0 is negative, f increases indefinitely for $y \to 0$. Hence, in a singular integral, it is necessary in computing equation (47) to exclude from the integration the small segment from $y = -\delta$ to $y = +\delta$ and then make δ approach zero. The expression that is thus obtained, however, has no limit, as is intuitively evident from an examination of figure 12. The bivortices (fig. 11(a)), into which equation (47) transforms the inductor system when the elements contained in strip 2δ (which includes the point 0) are excluded, are equivalent to two angular vortices (fig. 12(b)) (because the semivortices joined by the small circles are canceled) and these elements, on approaching 0, induce a velocity that increases without limit. For this reason, the integral equation (47) diverges if the abscissa x_0 from the point at which the filament AB cuts the x-axis is negative, as in the simplified case of figure 12; in the computation of the principal value of the singular integral, an expression is obtained that increases indefinitely and that represents the velocity induced by the two semivortices, which are indefinitely removed from the point 0. (See fig. 12.)

In order to eliminate the previously discussed divergence, the following artifice may be applied: There are added to the elements of the filament AB those of the indefinite vortex I (fig. 11) passing through the point Q at which the x-axis through the point 0 intersects the filament AB and having the circulation $-\Gamma_0$, where Γ_0 is the value of Γ at Q. The system thus obtained gives a velocity at 0 that is denoted by Dw and, according to equation (47), is represented by

$$4\pi \, Dw = \int_{-\infty}^{\infty} \left[\Gamma_0 f(x_0,y) - \Gamma f(x,y)\right] dy \tag{48}$$

The first term of this integral represents the effects of the bivortices having their origin on vortex I; the second term refers to the bivortices having origins on filament AB (hence the integration is extended from y of the point A to that of B). The two

terms are divergent when taken separately, but give a correct expression when added. The intuitive reasoning for this lies in the fact that the two semivortices that, according to the scheme of figure 12, include the point O and arise from the vortex I find compensating terms in the elements arising from the filament AB. The velocity induced by the vortex I is then added to Dw.

In the case of a system Σ of inductor elements analogous to the filament AB with corresponding marginal vortices, the following procedure may be used:

I) The transverse vortices cut out from the section by the induced points are prolonged indefinitely, thus obtaining a system Σ_1, the induced velocity of which w' is computed by the formulas of the two-dimensional motion.

II) The quantity Dw, which constitutes the velocity induced by the system $\Sigma_2 = \Sigma - \Sigma_1$ obtained by superposing on the inductor system Σ the system Σ_1 with reversed sign, is computed with the aid of equation (47) and added to w'.

The advantage of the preceding procedure lies in the fact that both w' and Dw have a homogeneous inductor system (indefinite vortices for Σ_1, bivortices for Σ_2) and therefore free or bound longitudinal and transverse vortices need not be separately considered. The advantage is reflected in the simplicity of the formulation of w and in the rapidity with which the results of the existing theories for the approximate solution of the problem under consideration are derived from this scheme.

The same procedure can be applied if the motion is unsteady. The bound-vortex system impresses on the fluid an imprint represented by a similar vortex configuration corresponding to the variation of the intensity of the generating system. These vortex systems carried by the stream may be treated as shown for the bound system. The plane system Σ_1 including the free vortices can be analyzed by the formulas of part I. The system Σ_2 is made up of bound vortices with the corresponding wake of the row of free elements (that is, pressure dipoles) and can therefore be analyzed with the aid of equation (48).

20. Vortex system of wing. - The velocities induced by the vortex system of a wing can thus be computed by adding to w', induced by

the plane system that would obtain if the transverse vortices cut out from the section through the point of induction were indefinitely extended, the velocities Dw that, as a function of the bound vortices, are written as

$$Dw = \int_S \gamma \hat{w}\, dx\, dy - \int_{S_1} \gamma_0 \hat{w}\, dx\, dy \tag{49}$$

If harmonic motion is considered, the functions w can be derived from equations (45) and (46).[9] If the intensity of the generator bivortex varies according to a different law, it is necessary to make use of equation (41), for which the function $\Gamma(\sigma)$ must be known. From this relation the function $\hat{w} = dw/dy\ \Gamma(0)$ is obtained, which, in general, varies with time.

The first of the two integrals of equation (49) is extended to the surface S of the wing, γ being the bound vorticity, the second integral is extended to the strip S_1 included between the lines l_1 and t_1 parallel to y passing through the points at which the chord through the point O cuts the leading edge l and trailing edge t; the vorticity γ_0 on this strip is that which is on the wing at the section through O. On each element of the surfaces S and S_1 there originates a bound bivortex of circulation $\gamma\, dx\, dy$ connected with the pressure, which acts on the element by the relation

$$p = \rho V \gamma$$

In the computation of Dw, as in the computation of w', the total circulation g along y can be referred to instead of γ, the two quantities being connected by the relations of part I. When the effects of the elements of a section y = constant are considered, a system of bivortices will be obtained the origins of which are distributed either on the chord or in the wake, the intensity of the distribution being represented by g. The expressions are restricted to harmonic motion and are written as

---

[9]As the reduced frequency ω increases, the modulus of $\hat{w}$ decreases and therefore also Dw, which represent the correction velocities due to the finite span.

$$g = \bar{g}(\xi,\eta)\ e^{i\Omega t}$$

$$K = \int_L g\ dx = \bar{K}(\eta)\ e^{i\Omega t}$$

In the wake at a distance σ from the rear edge in a segment $d\sigma$, bivortices originate that have the circulation

$$\frac{d\ K(\sigma)}{d\sigma}\ d\sigma$$

equal to the change that the total circulation K has undergone in the interval in which the rear edge has passed through the distance $d\sigma$ at the time $t-\sigma/V$ in which $K(\sigma)$ was displaced with respect to the actual value by $\Omega\sigma/V$:

$$K(\sigma) = K\ e^{-\omega\sigma}$$

The velocity induced by the elements of the section considered is therefore proportional to

$$\int_L gf\ dx + \int_0^\infty \frac{d(Ke^{-\omega\sigma})}{d\sigma}\ f\ d\sigma = \int_L gf\ dx - \omega K \int_0^\infty e^{-\omega\sigma} f\ d\sigma \qquad (50)$$

The symbol x_p denotes the abscissa of the rear edge of the chord (that is, $x_p = \xi_p - \xi_0$), therefore

$$f'(x,y) = f(x,y) - f(x_p,y)$$

It is easily found by using equations (44), that equation (46) can be written in the form

$$-\omega^2 \Phi = f(x,y) - \omega \int_0^\infty f(x+\sigma,y)\ e^{-\omega\sigma}\ d\sigma$$

Hence, equation (50) can be transformed to

$$\int_L gf' \, dx - \omega^2 K\Phi\,(\bar{x}_p,\bar{y}) \tag{50'}$$

The expression for the velocities Dw at the point ξ_0, η_0 is therefore obtained:

$$- 4\pi \, Dw = \int_{-b}^{b} d\eta \int_{L(\eta)} g(\xi,\eta)\, f'(x,y)\, d\xi \, -$$

$$\int_{-\infty}^{\infty} d\eta \int_{L(\eta_0)} g(\xi,\eta_0)\, f'(x,y)\, d\xi \, -$$

$$\omega^2 \int_{-b}^{b} \Phi(\bar{x}_p,\bar{y}) \cdot K(\eta)\, d\eta + \omega^2 \int_{-\infty}^{\infty} \Phi(\bar{x}_0,\bar{y}) \cdot K(\eta_0)\, d\eta \tag{51}$$

where $\int_{L(\eta)}$ indicates the integral taken from $\xi_n(\eta)$ and $\xi_p(\eta)$, and with x_0 the quantity $\left[\xi_p(\eta_0) - \xi_0\right] \Omega/V$.

The first of the integrals in the second member of equation (51) represents the induction of a system of segments of bivortices having their origin on the points of the wing and ending on the rear edge of the chord, and which are of intensity equal to the total vorticity at the point of origin. The second integral represents the effects of the analogous inductor system existing in the strip S_1. The third integral expresses the induction of the wake system constituted by a system of pressure dipoles with origin on the trailing edge of the wing. The fourth integral refers to the elements of the wake having their origin on the line t_1.

If

$$G(\xi,\eta) = \int_{\xi_n(\eta)}^{\xi} g(\xi',\eta)\, d\xi' \tag{52}$$

the first two terms in the second member of equation (51), which corresponds to the velocity denoted by w_2, can be transformed by integration by parts so as to assume the form

$$- 4\pi w_2 = \int_{-b}^{b} \frac{d\eta}{y^2} \int_{L(\eta)} \frac{G(\xi,\eta)\, d\xi}{r^3} - \int_{-\infty}^{\infty} \frac{d\eta}{y^2} \int_{L(\eta_0)} \frac{G(\xi,\eta_0)\, d\eta}{r^3}$$

where

$$r = \sqrt{x^2+y^2}$$

It is then observed that, in regard to the effects of the elements of the wake, the difficulties arising from the divergence of equation (47) cannot appear because all the points of the wing are located upstream of the line from which the system of the wake originates. Hence, for these elements the decomposition into the systems Σ_1 and Σ_2 can be avoided and the total $w = w' + Dw$ can be directly computed. The velocity denoted by w_3 is thus obtained and is expressed by

$$4\pi w_3 = \omega^2 \int_{-b}^{b} \Phi(\bar{x}_p,\bar{y}) \cdot K(\eta)\, d\eta - \frac{2\, K(\eta_0)}{\xi_p(\eta_0)-\xi_0}$$

If w_1 denotes the velocities induced by the plane system that is obtained by indefinitely prolonging the total vorticities cut by the section containing the point 0; that is, if

$$2\pi w_1 = - \int_{L(\eta_0)} \frac{g(\xi,\eta_0)\, d\xi}{x}$$

the resultant velocities are expressed by the sum $w = w_1 + w_2 + w_3$. In general, w_1 must represent the preponderant part of w, which facilitates development of the methods of iteration for the computation of the function g for an assigned w. The velocities w_2, which represent the part whose computation presents the greatest analytical complexities, are independent of the reduced frequency and

are therefore determined only once for any frequency of oscillation. The values of w_3, which depend on the frequency of the motion, are expressed by simple integrals and are, moreover, zero for all the distributions of the circulation (equation (11)) for which the integral K is zero.

21. Approximate theories. - A first approximate treatment of the problem of unsteady motion of the finite wing was developed by Cicala (reference 36). The principle of approximation there assumed finds simple formulation if reference is made to the expressions of the preceding section. Although use is made of the exact solution regarding w', in the computation of Dw the segments of the bivortices of Σ_2, to which the first two terms of equation (51) correspond, are neglected and, moreover, it is assumed that on every chord the velocity induced by the system of the wake is constant and equal to that which would obtain if the system started at the point of induction. Hence, referring to equation (51), in addition to neglecting the first two terms of the second member, in the computation of the other two by Φ, a function of the abscissa and of the ordinate of the point of t with respect to 0, the value corresponding to $x = 0$ is substituted. As a consequence of the first approximation, $Dw = 0$ if $K = 0$. Hence, if g is represented by a linear combination of g_n of equation (11), the corresponding velocities are the w_n of equation (12) and the pressures are obtained from the γ_n defined by equation (14). Reciprocally, if the vertical velocities on the various chords can be represented by a combination of w_n, the corresponding circulations and pressures can be computed on the various chords, section by section, as though the motion were two dimensional. This fundamental simplification permits reducing the tridimensional problem to a single case; for example, that of vertical velocities constant on the different chords: any distribution of w that is developed in the series of equation (16) (in this case, A_n is a function of the coordinate measured along the span) requires particular examination only for the circulation corresponding to the $\bar{w}$ defined by equation (17) (this simplification is also, in general, variable from one section to the next).

The bound circulation corresponding to the velocity $w = \bar{w} =$ constant over the entire chord is obtained on the basis of equation (19) in which, if harmonic motion is considered, according to equation (22) and the results of Section 15, the following relation must be substituted:

$$C = \bar{w}(1-\lambda)$$

From γ, ϵ is then computed with the aid of equation (36) and then the total circulation yields

$$K = \int_L (\gamma+\epsilon)\, dx$$

When the computations are made, it is found that between $\overline{w}$ and K or between the total amplitudes of the quantities $\overline{W}$ and $\overline{K}$ there exists the relation

$$\overline{\omega}\,(H^{(2)}{}_0 - iH^{(2)}{}_1)\, e^{i\overline{\omega}}\, \overline{K} = 2\overline{W}L$$

where H is the Hankel function of parameter $\overline{\omega}$.

The velocity $\overline{W}$ is that induced by the system Σ_1; to this quantity is added the velocity due to the system Σ_2, which, for the assumed simplifications, is also constant on every chord. With the computations developed in reference 35, equation (51) is transformed into the relation

$$-4\pi\, Dw = \int_{-b}^{b} \frac{dK}{d\eta}\, N\, d\eta \tag{53}$$

where

η coordinate measured from middle section of wing parallel to y (which is measured from point O)

$$N = \frac{1}{y} - \omega F$$

F function of variable $\overline{y} = \Omega y/V$ defined by

$$F = \int_0^\infty e^{-iu}\left(\frac{1}{u} + \frac{1}{\overline{y}} - \sqrt{\frac{1}{u^2} + \frac{1}{\overline{y}^2}}\right) du$$

This function is computed by this relation for $y > 0$. For $y < 0$, $F(y) = -F(-y)$. The function F is tabulated in reference 37; in a recent report by Küssner (reference 33), the function N is tabulated.

Adding the velocities induced by the systems Σ_1 and Σ_2 yields

$$\overline{W} = \frac{\overline{\omega}(H^{(2)}{}_0) - iH^{(2)}{}_1)\, e^{i\overline{\omega}}\, \overline{K}}{2L} - \frac{1}{4\pi}\int_{-b}^{b} \frac{d\overline{K}}{d\eta} N\, d\eta \tag{54}$$

This equation, on the basis of known values of $\overline{W}$, defines the distribution of the total circulations along the span. For $\overline{\omega} = 0$, this reduces to the integrodifferential equation of Prandtl. Inasmuch as, for the simplifications assumed, the distribution of γ over the chords is similar to that of the two-dimensional motion, on the basis of the values of the total circulations, the problem is completely solved. Given the series of equation (16) on w, the circulations and the pressures corresponding to the part that is developable in the series of w_n is computed as if the motion were two-dimensional, whereas for the remainder $\overline{w}$, the circulations are distributed on the chord as if the motion were two-dimensional and along the span of the basis of the solution of equation (54).

In a succeeding note (reference 37), the procedure was applied to the determination of the aerodynamic coefficients for the oscillating wing.

Independently of reference 36, Borbély proposed a type of approximation for the computation of w for the finite wing (reference 38). Reference 35 shows that the expressions that Borbély elaborated for the computation of Dw in the particular case of the elliptical distribution of K along the span agree with the results that, for this case, were derived on the basis of equation (53).

Possio, concerned with the problem of the stability of small oscillations of the wing considered as a rigid body, also analyzed the problem of the oscillating wing of finite span. Making use of the concept of acceleration potential, he derived equations (9) and (10), which, however, as has been shown in Section 8, are also justifiable on the basis of the concepts of vortices. The solution is expressed by Possio in the form of a power series of the parameter $\Omega b/V$. The value limited by this parameter and the smallness of the ratio L/b (large aspect ratios) in the series containing the powers of $\Omega L/2V$ justify, for the computation of the w' corresponding to

the system Σ_1, the introduction of simplifications that were not adopted in references 36 and 37. The assumed simplification in the computation of Dw, when it is reduced to the scheme represented by equation (49), can be thus defined: The function $\hat{w}$ is computed by means of equation (46), substituting for Φ the value that, according to equation (46a), corresponds to $\bar{x} = 0$ and that is therefore constant for the elements of each chord. Reference 39 contains the principles of the procedure. Some of the results are described in reference 40 and in greater detail in reference 41. More general cases of the motion are considered in references 42 to 44. Reference 44 analyses the law of variation of the lift on a rigid wing of elliptical plan form during the start of the motion (the same problem that was studied by Wagner in the two-dimensional field). In the computation of the velocities induced by the transverse vortices, there was assumed (in the simplification of equation (14) of reference 44) an approximation different from that used in reference 43; the approximation gives for the case considered a greater precision of the results.

Sears (reference 45) also studied the problem of the oscillating wing of rectangular plan form with approximate procedures. Reducing the computations to the scheme of the preceding section, the simplification assumed consists of the suppression of w_2, while a rigorous computation is proposed for w_3, and making use of the results that are obtained for the infinite wing with sinusoidal distribution of the circulations along the span. The computation, which is intended to eliminate the errors inherent in the approximate theory of references 36 and 37 criticized by Sears, does not give results more accurate than that theory. As an example, the effects of the inductor elements of a chord L, for the case $\bar{\omega} = 1$ [10], are considered with the point of induction at a distance $y = L$. Apart from factors that need not be considered in a comparison, the induction can be expressed by the equation (50'), which can be written as

$$\frac{1}{y^2}\int_l g\Phi_1 \, dx$$

where Φ_1 is the nondimensional factor

---

[10] In the cases of wing vibrations encountered in practice, the reduced frequency turns about this value.

$$\Phi_1(x,y) = y^2\left[f'(x,y) - \omega^2\,\Phi\left(\frac{\Omega x_p}{V}, \frac{\Omega y}{V}\right)\right] = \Phi'_1 + i\Phi''_1$$

x being the abscissa of the point, with the vorticity g and x_p the abscissa of the rear end of the chord measured with respect to the position of the point of induction. The quantity Φ_1 was computed for the elements of the circulation g at the leading edge, at the middle, and at the rear edge of the chord considered, and in the three cases, on modification of the position of the induction point, there were obtained (see fig. 13, in which are drawn as the abscissas and ordinates the real and imaginary parts of Φ_1, respectively) the curves I, II, and III in the figure with the values of $X = x_p/L$. If the approximation that was made in reference 36 is assumed, in the three cases, for any position of the induction point, the end of the representative vector is the point indicated by the double circle; with the aid of the approximation of Sears for all three cases, the representative points are those of curve III. The error with either approximation is large. If the greater complexity of the computations required by the solution of Sears is considered, the advantage of his approximation is questionable.

In a recent publication (reference 33), Küssner, making use of the acceleration potential, developed a new approximate theory of the oscillating wing of finite span. The approximation assumed is easily related to the expressions of the preceding section; referring to equation (49), the value of $\hat{w}$ given by equation (45), setting $u = x + \sigma$, can be written in the form

$$-4\pi\hat{w} = e^{\omega x}\int_x^{\infty} \frac{e^{-\omega u}\,du}{\sqrt{(u^2 + y^2)^3}} \tag{45'}$$

Küssner's solution can be obtained by setting the lower limit of this integral equal to zero. The Dw, on the basis of this assumption, are proportional to $e^{-w\xi}$ (where ξ is the coordinate measured parallel to x from a fixed origin of the wing in an arbitrary position); that is, the values of Dw are distributed by the sinusoidal law over each chord. If the distribution of the vorticity is considered, which on the basis of the solution of the two-dimensional motion corresponds to the velocities distributed according to this law, and if for this case the values of w of the system Σ_1 are summed, velocities are obtained that can be represented by the expression

$$w = \overline{W}e^{i\Omega t - \omega\xi} = \overline{W}e^{-\omega(\xi - Vt)} \tag{55}$$

where $\overline{W}$ is a function of η.

By obtaining, on the basis of the solution of the two-dimensional problem, the velocities induced by the system Σ_1 and adding the values of Dw computed with the aid of equation (49), simplified according to the preceding assumption with respect to the limit of the integral in equation (45) and transformed by operations analogous to those that led to equation (54) (see reference 35), the final equation is obtained

$$\overline{W} = \frac{\overline{\omega}(H^{(2)}{}_0 - iH^{(2)}{}_1)K'}{2L(J_0 - iJ_1)} - \frac{1}{4\pi}\int_{-b}^{b} \frac{dK'}{d\eta} N \, d\eta \tag{56}$$

in which H and J are cylinder functions of the parameter $\overline{\omega}$ and

$$K' = \int_L \gamma e^{\omega\xi} d\xi$$

This quantity has the same modulus as the total circulation K, but has a certain phase displacement with respect to it.

By solving the integrodifferential equation (56), which has the same kernel as equation (54), the law of distribution of the vorticity on the wing corresponding to the values of w given by equation (55) can be obtained. If it is assumed that $\xi - Vt$ is the abscissa measured in a system of reference fixed with respect to the fluid, it is concluded that equation (55) represents a distribution of velocity having local values constant in time, as would be the case of disturbed air that presents, along the trajectory of the wing, vertical currents of constant velocities in time (stationary gust). The solution indicated refers to the case of the stationary gust of sinusoidal form. The more general case of motion can be studied with the aid of the preceding solution and the solution of the two-dimensional problem when it is considered that, according to the approximation of Küssner (as with the procedure of references 36 and 37), the values of Dw are zero for the distribution of the g that gives rise to zero values of the integral K and therefore of K', which has the same modulus as K. Hence, in this case, to the values of w represented by a combination of w_n expressed by equation (12) there correspond

the values of g expressed by equation (11), as if the motion were two-dimensional. On this basis, reference 35 indicates the extension to general cases of the solution based on equation (56). Küssner makes the generalization by a different principle, which leads, however, to expressions that, in the limiting case of the infinite wing, give the exact solution already known.

The approximate theory of Küssner therefore cannot be derived on the basis of the vortices concept developed in Section 18, as is true for the solution proposed by Cicala, which is criticized in the preceding note by Küssner as presenting arbitrary assumptions; the disagreement between equations (54) and (56) finds its justification in the different principle of approximation rather than in a fault of the derivation method based on the vortex concepts, which, according to Küssner, would lead to erroneous results. The approximations thus far assumed all lead to a somewhat inexact value of the induced velocities, as is shown in reference 35; the theories are all, except that of Sears, constructed so as to converge in the case of steady motion to the theory of the vortex filament of Prandtl, whose approximation has thus far been proven sufficient. On analytically examining some local values of the errors committed,[11] all are shown to be of little precision, from the simplest to that of Sears, which consists of the most laborious application, or that of Küssner, which is based on the concept of pressure dipoles. Only the fact that in a limiting case

---

[11]If the solution is expressed in the form of a decreasing power series of the aspect ratio λ, it is found that the error in the existing theories starts from the term in $\log\lambda/\lambda^2$. In reference 35, rather than analyzing the order of magnitude of the error, it is preferred to carry out the computation for concrete cases so as to be able to compare the various approximations.

The comparison is particularly evident by making reference to the concept of pressure dipoles. According to the principle followed in reference 39, the dipoles of the system Σ_2 are transported parallel to the direction of the x-axis up to the induction point; according to the principle adopted in reference 33, these dipoles are given the same displacment and, in addition, the same phase displacment $\Omega x/V$ (x is the abscissa of the dipole with respect to the induction point); according to references 36 and 37, these elements are given the same displacement and phase shift $\Omega(x-x_p)/V$. It is shown in reference 35 that the three approximations alter somewhat the value of the velocity produced by the pressure dipole. The affinity of the three principles is evident.

the approximations lead to a theory that has shown itself satisfactory in applications indicates that a compensation of the errors will, in a certain measure, be found in the values of the resultants of the actions. A solution of greater rigor would, however, be greatly desirable.

PART III. - DRAG AND PROPULSIVE FORCE[12]

The component parallel to the velocity V of the aerodynamic action of the wing of infinite aspect ratio in nonsteady motion can be readily computed on the basis of the solution of the problem of two-dimensional motion, as given in part I. Under the assumptions made, for any law of motion of the infinite wing, the theory permits computing the drag or propulsive force. For the hypothesis of a perfect fluid, the profile drag is not considered, nor are the variations of this drag due to the unsteady motion computable with the aid of this analysis. These actions are therefore added to those that are here computed.

For the wing of finite aspect ratio, in the problem under condideration, the uncertainties mentioned in part II are also encountered. The analysis will therefore be limited to the results obtained for the two-dimensional motion.[13]

Drag and thrust in unsteady two-dimensional motion. - The symbol R_i is the instantaneous value of the force that arises in the direction of V on a segment of unit chord of the wing in a uniform flow of velocity V. With the notation of the preceding parts and in the same range of validity of the theory there given, R_i, considered positive if it has the sign of a resistence and negative if it corresponds to a propulsive force, can be computed with the aid of the expression given by Birnbaum (reference 3).[14]

$$R_i = \rho V \int_L \frac{\partial z}{\partial x} \gamma \, dx - \pi \rho a^2 L/4 \tag{57}$$

where

$$2a = \lim_{\vartheta \to 0} \gamma \sin \vartheta \tag{58}$$

---

[12]The numbers of the figures, the equations, and the paragraphs follow from the preceding part.

[13]The treatment of Schmeidler (reference 46) examines the aerodynamic action corresponding to assigned vorticity of the wing. The method cannot, however, be generalized.

[14]The sign $\int_L$ indicates the integral taken over the chord of the wing from the leading to the trailing edge.

The aerodynamic action on a segment dx of the chord is represented by the force $\rho V\gamma\, dx$ normal to the line of the axis and is therefore inclined to the z-axis normal to V by the angle $\partial z/\partial x$. The integral in the second member of equation (57) therefore represents the action along x that is exerted on the points of the chord. The negative term in the expression corresponds in every case to a propulsive force and arises from the suction that is exerted at the leading edge by the surrounding fluid and produces a lowering in pressure that becomes infinite for the wing of infinitesimal thickness. If γ is expressed by means of the customary series of functions $\cot \vartheta/2$, $\sin \vartheta$, ..., $\sin n\vartheta$, only the first term can give rise to a suction at the leading edge because the other terms represent circulations that vanish. The quantity a defined by equation (58) gives the coefficient of the first term as found when considering that for $\vartheta \rightarrow 0$,

$$\lim \sin \vartheta \cot \frac{\vartheta}{2} = 2$$

The steady motion that is considered corresponds to a chordwise distribution of vorticity represented by the same γ as for the steady motion. Inasmuch as the suction at the leading edge depends on the instantaneous value of γ, the value of γ must be the same for nonsteady motion as for steady motion. In addition, when it is considered that for steady motion the resultant force in the wing direction must be zero,

$$0 = \rho V \int_L \left(\frac{\partial z}{\partial x}\right)_0 \gamma\, dx - \pi\rho a^2 L/4 \tag{59}$$

where $(\partial z/\partial x)_0$ is the slope of the axis of the wing on which, under the considerations of steady motion, the vorticity distribution γ holds.

If w_γ denotes the velocity induced by these vortices, then

$$V\left(\frac{\partial z}{\partial x}\right)_0 = w_\gamma$$

From this relation and from equations (57) and (59),

$$R_i = \rho \int_L \left(V \frac{\partial z}{\partial x} - w_\gamma \right) \gamma \, dx \tag{60}$$

which is a second form of equation (57) given by Jaeckel (references 28 and 29) and is entirely equivalent to the equation given in the development of the computations.

Denoting by w_l the velocity induced by the free vortices and taking account of equation (1) yield

$$w = w_\gamma + w_l = V \frac{\partial z}{\partial x} + \frac{\partial z}{\partial t}$$

Equation (60), on the basis of this relation, becomes

$$R_i = \rho \int_L w_l \gamma \, dx - \rho \int_L \frac{\partial z}{\partial t} \gamma \, dx \tag{61}$$

This third form of equation (57) was used by Schmeidler (reference 46). It lends itself to interesting interpretations: If the forces in the z-direction are distributed with density $\rho V \gamma$ and the corresponding velocities of the points of application are $\partial z/\partial t$, the instantaneous power N_i absorbed by the motion of the points of the profile in the direction normal to V is expressed by the relation

$$N_i/V = \rho \int_L \frac{\partial z}{\partial t} \gamma \, dz \tag{62}$$

It is noted that the values of z are assumed positive downward, whereas the pressures $\rho V \gamma$ are positive upward. Hence N_i, according to equation (62), is positive if work is done in overcoming the aerodynamic action.

When equation (62) is considered, it is observed that the second term in the second member of equation (61) represents the propulsive force (or thrust)[15] that would arise if the phenomenon occurred without dissipation of energy; that is, without increase in the kinetic energy of the fluid surrounding the wing. The first term represents the drag R_s that must be overcome by this phenomenon, or in other words, by the creation of the vortex wake.

The computation of the instantaneous values R_i and N_i and, successively, of the mean values R_m and N_m of the same magnitude, in the case of harmonic motion, is immediately obtained on the basis of the expressions given in part I. Poggi (reference 47), on the basis of the investigations of Glauert (reference 20), computed the propulsion and power corresponding to a rotary oscillation and, as a limiting case, to the translatory oscillation of the wing. Küssner (reference 21) determined these values for the wing in translational and rotary oscillation of the wing or flap. The same computations were made by Garrick (reference 48), who made use of equation (61) and of the energy interpretation of the term

$$R_m = \frac{\pi}{2}\rho L V^2 \left(\frac{2}{\pi\omega} \left| \frac{J}{H_1^{(2)} + iH_0^{(2)}} \right|^2 + \Phi \right) \tag{63a}$$

$$- N_m = \frac{\pi}{2}\rho L V^3 \Phi \tag{63b}$$

where

---

[15]This is the quantity called "Vortrieb" by Schmeidler; the first term is called "Widerstand."

$$\Phi = \mathscr{R}\left(J\bar{J}_2 - \frac{H_1^{(2)}\, J\bar{J}_1}{H_1^{(2)} + iH_0^{(2)}}\right)$$

$$\pi J = \int_L \left(\frac{dZ}{dx} + 2i\omega\frac{Z}{L}\right)(1 - \cos\vartheta)\, d\vartheta$$

$$\pi J_1 = \frac{2i\omega}{L}\int_L Z\, d\vartheta + \pi J_2$$

$$\pi J_2 = \frac{2i\omega}{L}\int_L Z\cos\vartheta\, d\vartheta$$

and $z = Ze^{i\Omega t}$ is the ordinate of a point of the wing according to the complex notation with $\mathscr{R}(C)$, $|C|$, and $\bar{C}$ the real part, the modulus, and the conjugate complex, respectively, of the complex quantity C, with H the Hankel function of reduced frequency $\omega = \Omega L/2V$.

The first addend that appears in the parentheses of the expression of R_m corresponds to the resistance R_s. If E denotes the amplitude of the sinusoid that represents the distribution of the free vorticity in the wake, it is found that, according to equation (63), the following relation holds:

$$R_s = \rho L E^2/16\,\omega$$

This relation can also be derived by considering that the work done by the resistance R_s during the displacement $2\pi V/\Omega$ corresponding to an entire oscillation of the wing must be equal to the increment that the kinetic energy of the fluid has received in the same time, and therefore to the kinetic energy of the fluid (considered stationary at infinity) in a strip included between two parallels to the z-axis at $2\pi V/\Omega$ distance from each other and located in the wake at a great distance downstream of the wing.

Applications to particular cases of oscillatory motion. In the case of a nondeformable wing (a wing in motion of translation and rotation),

$$Z = Z_m - Z_0 \cos \vartheta$$

in which Z_m represents the complex amplitude of the oscillation of the middle point of the wing and Z_0 the amplitude of the incident oscillation. Equation (63) yields, by simple computations,

$$R_m = \frac{\pi}{2} \rho L V^2 \left[\mathscr{R}(J\bar{Z}_0 K) - h \left|J\right|^2 \right] \tag{64a}$$

$$-N_m = \frac{\pi}{2} \rho L V^3 \left[\mathscr{R}(J\bar{Z}_0 K) - k \left|J\right|^2 \right] \tag{64b}$$

where

$$J = Z_0 + i\omega Z_m + \frac{1}{2} i\omega Z_0$$

$$K = \frac{H_1^{(2)}}{H_1^{(2)} + iH_0^{(2)}} (1-i\omega) + \frac{1}{2} i\omega$$

$$h = \left| \frac{H_1^{(2)}}{H_1^{(2)} + iH_0^{(2)}} \right|^2$$

$$k = \mathscr{R}\left(\frac{H_1^{(2)}}{H_1^{(2)} + iH_0^{(2)}} \right)$$

The quantities K, h, and k are functions of the reduced frequency. The variation of h and k as functions of ω are shown in figure 14. In figure 15, the real part is plotted on the abscissa of the quantities K/h and K/k and the imaginary part on the ordinate assuming the segment OA as unity and the positive sign of the imaginary axis in the downward direction. The points on the curve give values of the reduced frequency.

In the particular case of translatory oscillation $(Z_0=0)$, from equation (64), denoting by $v = \Omega|Z_m|$ the maximum velocity corresponding to this oscillation,

$$-R_m = \frac{\pi}{2} \rho L v^2 h \tag{65a}$$

$$N_m = \frac{\pi}{2} \rho L v^2 k V \tag{65b}$$

The force that arises in this type of motion is a propulsive one. The efficiency of the wing considered as a means of propulsion is h/k, which is equal to 1 for $\omega=0$ and decreases continuously toward 0.5 as ω increases.

If a wing of velocity v_1 normal to the wing velocity V is considered under conditions of steady motion, the lift P, the coefficient of which is equal to $\pi v_1/V$, under the usual assumptions gives a component in the difection V represented by

$$Pv_1/V = \pi\rho L v^2{}_1$$

for a segment of unit chord. This component is directed forward whether v_1 is directed downward or upward. On varying v_1 harmonically, if it were valid to apply at each instant the expressions of the steady motion, v_1 would be the mean value of the propulsive force given by equation (65a), in which h = 1. It is therefore concluded that the exact analysis corrects this approximate consideration by reducing the propulsive force by a factor depending on the reduced frequency. This factor approaches 1 when the reduced frequency is decreased and approaches 1/4 when ω is decreased. The power absorbed is reduced according to a factor that varies from 1 to 0.5 with an increase in ω.

It is of interest to examine how, by combining a torsional motion with translational and oscillatory motion, the propulsive force can be increased. By simple computations, it is found, on the basis of equation (64a), that for a given amplitude z_p of oscillation of the rear neutral point of the wing, for every reduced oscillation frequency a certain value of the amplitude and of the phase of the torsional motion exist for which the propulsive force is a maximum. If K' and K'' denote the real and imaginary parts of the quantity K/h, respectively, the component f of the rotation in phase with the translatory motion is given by

$$f = \frac{z_p}{L} \frac{\omega K''}{K'-1} \tag{66a}$$

The component in quadrature is expressed by

$$q = \frac{z_p}{L} \frac{2-K'}{K'-1} \omega \tag{66b}$$

The propulsive force under these conditions is given by

$$R_m = \frac{\pi}{2} \rho L v^2 h \cdot \frac{K'^2 + K''^2}{4(K'-1)} \tag{67}$$

With respect to the propulsive force of the purely translatory oscillation expressed by equation (65a), the effect of the rotation introduces the factor dependent on the reduced frequency $(K'^2+K''^2)/4(K'-1)$. This quantity assumes decreasing values with increases in the reduced frequency, tending asymptotically to the value 1.125. For $\omega = 0.5$, this value is equal to 1.445; for reduced frequencies not too small, the adding of the torsional motion does not greatly modify the value of the maximum obtainable propulsive force, the base value of which is always that of the purely flectional motion. For sufficiently small reduced frequencies, there are considerable increases. By neglecting the higher powers of the reduced frequency, the expression for R_m can be assumed

$$R_m = \frac{\rho}{2} z_p v V$$

On decreasing ω, the torsional motion that must be combined with the flectional motion to obtain the maximum propulsive force tends to assume a phase displacement of 90° ahead with respect to the translatory oscillation (that is, in the phase in which the translatory velocity is a maximum upward, the wing is nearest its maximum negative incidence angle).

The analysis of the variation of the propulsive force as a function of the flectional motion for a given amplitude of the torsional motion was given in reference 49 by means of a graph that permits computing directly from the propulsive force (or drag) and the power absorbed (or emitted) in the oscillation. All the values of the efficiency from 1 to 0 can be obtained by suitably varying the amplitude and the phase of the flectional motion. The region of maximum efficiencies is nearest the point $J = 0$, which corresponds to the motion without drag and without absorbed power, with zero vorticity in the wake. Under these conditions, for a small ω, the torsional motion is displaced by about a 90° lag with respect to the flectional motion; that is, in the phase in which the translatory velocity[16] upward is a maximum, the wing is nearest the maximum positive incidence. This result, in relation to that of the analysis of the maximum propulsive force previously indicated, leads to the conclusion that the conditions of maximum efficiency are not compatible with those of maximum efficiency of the wing considered as a propulsive means, which can be obtained with a certain loss in efficiency.

On the basis of equation (63), it may also be determined whether, by combining with the flectional motion a deformation that alters the curvature, any advantage in the value of the thrust can be obtained.

When

$$Z = Z_m + Z_2 \cos 2\vartheta$$

then

$$J = 2Z_2 + i\omega Z_m$$

$$R_m = \left[2\mathscr{R}\left(J\overline{Z}_2 \frac{H_1^{(2)}}{H_1^{(2)} + iH_0^{(2)}} \right) - h|J|^2 \right] \cdot \frac{\pi}{2} \rho L V^2$$

---

[16]More precisely, the velocity of the rear neutral point.

In this case, results are obtained that are entirely analogous to those of the motion of translation and rotation. When

$$2Z_2 = (f+iq)\ Z_m$$

there are obtained for f and q the same expressions of equation (66) in which K' and K'' are substituted for the real and imaginary parts of $H_1^{(2)}/h(H_1^{(2)}+iH_0^{(2)})$. With this modification, the factor of increase in the maximum thrust has the same expression as for the preceding case. This factor, which can be expressed by $1/4(k-h)$, has the value for $\omega \longrightarrow \infty$ and the value 1.148 for $\omega = 0.5$. In this case also, for a not very small ω, no great increases are obtained in the thrust as compared with the purely translatory motion. As in the preceding case, for a given frequency of oscillation on increasing the wing velocity, then maximum thrust for a given translatory amplitude first increases rather slowly; only when sufficiently low values of the ratio $\Omega L/2V$ are obtained does the maximum thrust tend to increase linearly with the velocity.

PART IV. - EXPERIMENTAL INVESTIGATIONS

The experimental investigations that have thus far been conducted on the aerodynamic actions on a wing in unsteady motion are not as numerous as would be required by the complexity and importance of the problem. It is from the measurement of the forces on the oscillating wing that conclusive data are expected that would permit a reliable computation of the critical velocities of the wings and tail surfaces, Various problems relative to the stresses of the wing structures during flight in agitated air also require experimental clarification. The experimental investigation should furnish the necessary control for the fundamental hypotheses of the theory of wings of infinite aspect ratio and for the finite wing, the actual theory that makes use of approximations that have not yet been completely checked should be integrated. The research presents, in addition to the difficulties common to all problems for which forces variable in time are to be measured, serious obstacles for the requirement of absolute regularity of the stream in which the experiment is conducted. Small fluctuations in the velocity and in the direction of the wing, which do not have any great effect in the measurements of a steady flow, can render the measurements of the forces on the oscillating wing entirely unreliable.

In this part, the results obtained up to the present by various experimentors will be discussed, and the results compared with theory.

English tests. - The first series of tests was conducted by Duncan at the National Physical Laboratory and published in 1928 (reference 50). The object of the tests was to check the mechanical theory of the wing oscillations. From these measurements Duncan obtained, for a particular wing model, the values of the aerodynamic coefficients to be introduced in the expression of the velocity in order to compare the calculated value with the experimental velocity obtained. The greater part of the tests was conducted on a model that was deformed during the oscillation, according to an incompletely defined law. The tests therefore do not lend themselves to a check of the aerodynamic theory, a check with which the experimentor was not concerned, as he did not then have the results of the theory. A series of tests were, however, conducted by Duncan on a model that, during the oscillation, rotated rigidly about an axis parallel to the span. The wing was rectangular, with RAF 15 profile, 152-millimeter chord, and 686-millimeter span. The axis of rotation was at 1/10 of the chord from the leading edge. The damping of the oscillations was measured in the presence of a wind and in still air for various angles

of attack and frequencies of oscillation. Inasmuch as the oscillations did not have very rapid damping, the results can be compared with those of the theory on harmonic motion. According to the theory, the moment of the aerodynamic force due to the rotational oscillation possesses a component in phase with the motion and a component M_q in quadrature and therefore in phase with the angular velocity q; the moment M_q, which has its sign opposite to q, therefore constitutes a damping action and may be put in the form

$$M_q = \pi\rho b q L^2 V S$$

where S is the wing area. For a segment of an infinite wing, the coefficient b depends on the reduced frequency and on the position of the axis of oscillation. On increasing the reduced frequency, b tends to the value[17]

$$b = \frac{1}{2}\left(\xi - \frac{1}{2}\right)^2 \tag{68}$$

where ξ is the distance of the axis of rotation from the focus considered positive if the axis is in the rear. For the finite wing, b depends also on the plan form. Its values for not-too-small reduced frequencies are not, however, considerably removed from that given by equation (68). For the position of the axis of rotation of the tests of Duncan, this gives $b = 0.211$. The values of b obtained on the basis of the damping moments measured by Duncan are given in figure 16. For the computation of b, the value of the aerodynamic damping moment is considered to be the difference between the measured values in the presence of wind and in still air. The values are all below that given by equation (68). For equal velocities, these values indicate a decrease with a decreasing ω, as would also be given by theory for positions of the axis of rotation ahead of the focus. For equal frequency, on decreasing the velocity (hence on increasing ω), the experimental values in general, indicate a decrease that can be ascribed to the effects of the Reynolds number. There is also a decrease on decreasing the angle of attack (at least in the region investigated). For angles of attack from -4° to -5°, Duncan found

---

[17]Which can be derived on the basis of the expressions given in references 2 and 21.

a vanishing of the aerodynamic damping. This phenomenon, called by Studer "oscillations of separation," cannot be studied by the theory of the preceding parts.

The measurements conducted by Duncan of the damping of the oscillations of the flap also lend themselves to a comparison with theory. In these tests, the damping due to the friction of the suspension is rather large. By assuming for this case also that the aerodynamic damping can be obtained from the difference between that measured with wind and that measured in still air, it is found that the experimental value of this damping is equal to about one-half the theoretical. This disagreement should not be surprising, because the derivatives relative to the flap are always markedly less than the theoretical values. In the tests conducted by Duncan, the value of the derivative of the hinge with respect to the angle of the elevator under conditions of steady motion was equal to 0.6 of the theoretical value.

Tests conducted at the Laboratorio di Aeronautica di Torino. - The aerodynamic actions on the oscillating wing were measured by Cicala in the free-jet wind tunnel of 600-millimeter diameter at the Laboratoria di Aeronautica di Torino. The chord of the models on which the tests were conducted was about 13 centimeters and the span about 50 centimeters. Because of the relatively small dimensions of the jet, which was free in the region in which the model was located, the wing operated with a rather low effective aspect ratio; the value of $\partial C_p/\partial\alpha$ under steady conditions (referred to ρV^2) was equal to about 0.5π because the wing projected from a plane that was placed tangent to the jet in order to mask the suspension and measuring apparatus. This rather low value of the aspect ratio is one disadvantage of these tests, which are described in references 14, 51, and 52.

In a first series of tests (reference 14), the aerodynamic damping of the flectional oscillations (rotation of the model about an end chord) and the damping of the oscillations about the axis containing the foci of the various sections (also a rigid rotation) were measured. The measurements relative to the flectional motion were of little importance because of imperfections in the construction of the model and of the measuring apparatus. These tests were later repeated (reference 52). The measurements relative to the torsional oscillations gave for b a value of about 0.11 (against 0.125 given by equation (68) for $\xi = 0$), which was almost constant when the reduced frequency was varied as required by theory. This value was confirmed, at least for the range of not very large angles of attack, by succeeding

tests on a model different from the one described in reference 14, this model also being of symmetric profile but of greater rigidity. The principle of the measuring apparatus for these tests and for those of series III can be briefly described as follows: The oscillation of the model was controlled through an intermediary element that possessed two simultaneous motions, a rotation depending on the displacement imposed on the model and a rotation about an axis perpendicular to the first rotation and depending on the magnitude of the force transmitted. This element carried a mirror that reflected on sensitive paper a luminous point that, by describing the motion of the intermediary, gave the force-displacement diagram (and therefore the moment-rotation diagram). The test conducted for equal frequency in still air and in the presence of wind permitted isolating the aerodynamic action. In figure 17 are given some of the oscillograms thus obtained that give the simultaneous values of the angular position of the wing and of the moment transmitted. The field of the coordinates can be retained as Cartesian, so that the diagrams are approximately ellipses. The enclosed area measures the work absorbed in the oscillation. In the figure are given the scale of motions and also the lines α = constant corresponding to the extreme positions for one of the oscillograms obtained for a wing velocity of 9.4 meters per second and for a number of oscillations equal to 570. For each measurement, the oscillogram was obtained by permitting the luminous point to run through two or three cycles. The paper was successively advanced, thus intercepting the light point. In order to obtain a reference point of the angles of attack for each oscillogram, a point in a fixed position was marked (points F in the figure).

In the third series of tests (reference 52), the damping measurements of the translatory flectional oscillation (in the sense previously defined) were repeated. The component of the lift in phase with the displacement of the wing can be expressed by the derivative

$$\frac{1}{\pi}\frac{\partial C_p}{\partial(v/V)} = a_2$$

where v is the translational velocity normal to V and v/V is the corresponding variation of the angle of attack. According to the theory of the infinite wing, the factor a_2 varies from -1 to -0.5 on increasing the reduced frequency (always negative because the variation of the lift has a sign opposite to the vertical velocity). According to the approximate theory of the finite oscillating wing, the range of variation of this factor is reduced, starting from

$\omega = 0$, from the corresponding value of the steady motion computed with the aid of the vortex-filament theory of Prandtl. The tests gave for a_2 a value nearly constant and equal to 0.43 for not too small a velocity within the range of reduced frequency in which the tests were conducted ($0.2 < \omega < 0.6$). At small velocities, a decrease of a_2 was found that was ascribed to the effect of the low Reynolds number.

The lift component in phase with the flectional motion and the focal moment in phase with the torsional motion were rather small, as required by theory, the aerodynamic inertia effect being included with the measurements of the mass of the model on the basis of the oscillation data in still air.

The variations of lift that arise from an oscillation of the wing about the focus were also measured (reference 51). By expressing the lift component in phase with the rotation by means of the derivative

$$\frac{1}{\pi}\frac{\partial c_p}{\partial \alpha} = a_3$$

values of about 0.52 were obtained for this coefficient for all the reduced frequencies at which the tests were conducted ($0.1 < \omega < 0.7$).

The component P_q of the lift, proportional to the angular velocity q and therefore in quadrature with the motion, can be expressed by means of the relation

$$P_q = \pi\rho a_4 qSLV$$

The coefficient a_4, which, according to the theory of the wing of infinite aspect ratio, has values increasing with ω and approaching to 0.5, was found from the tests to be almost always equal to 0.38.

The principle of the apparatus for the measurement of the lift due to the torsional moment was the following: The wing was put in forced torsional oscillation by guiding, according to the harmonic law, a point of an end section while a point of the same section was attached by means of a steel wire. Under these conditions, in addition to the torsional motion, a flexional motion of rotation arose

about the chord of this section. In another section, a force having a component in phase and one in quadrature with the excited motion, was introduced, the amplitudes of which could be varied during the test. In the presence of wind, the amplitudes of the two components were controlled so as to eliminate the flectional motion and to balance the aerodynamic action and the inertia force. From the tests conducted at equal frequency in still air and with wind, the aerodynamic forces were obtained. By the same principle, the focal moment due to the flectional motion was measured. In agreement with theory, the value of the flectional motion was so small that it could not be measured.

For all the aerodynamic derivatives expressed in the preceding form, almost constant values were thus obtained in these tests by varying the reduced frequency. The theory of the wing of finite aspect ratio developed in reference 37 justifies this result for the range of not-too-small reduced frequencies and low aspect ratios at which the tests were conducted. In figure 16, the dotted line gives the value of the coefficient b that would be obtained by these tests, a value that does not diverge much from the tests of Duncan.

American tests. - Tests have recently been conducted in the United States for the measurement of the aerodynamic forces on the oscillating wing to check the theory of the infinite wing. An interesting series of tests was conducted by Reid and Vincenti at the Guggenheim Laboratory (reference 53). The model used had a chord of 38 centimeters and therefore permitted the attainment of sufficiently high Reynolds numbers. The span was not large (about 91 cm). Nevertheless, a large aspect ratio was obtained because the model was placed between two walls normal to the plane of the wing. The wing of NACA 0015 profile was put in oscillation about an axis at a distance of 4/10 chord from the leading edge. At the opposite edge to that at which the motion was excited, the aerodynamic action was measured. The wing support, consisting of a ball bearing, was sustained by a rigid spring the inflections of which were recorded by means of mechanical and optical amplification on a strip of sensitive paper with uniform forward motion. On the same strip were marked the instants at which the wing occupied the extreme and middle position. With the aid of a harmonic analysis of a graph of the forces, which were necessarily irregular, the amplitude and the phase of the fundamental harmonic with respect to the motion of the wing were derived and thus the ratio r of the amplitude of the lift under conditions of oscillatory motion and the ratio corresponding to the steady motion for equal rotation and phase angle (leading) δ between the lift and the rotational motion were measured. The results are plotted as a function of the reduced frequency in figures 18 and 19 and compared with the theory of wings of infinite

aspect ratio[18] (continuous curve) and with those that were obtained in the Torino tests. The Torino tests must necessarily present a considerable divergence from the American tests because of the difference in aspect ratio. The phase displacements predicted by theory are somewhat greater than the experimental values. A considerable deviation is presented by the theoretical and experimental curves of the ratio r.

A similar series of tests was conducted by Silverstein and Joyner (reference 54). The model had a chord of 13 centimeters, considerably smaller than that used in the tests by Reid. In this case also, a large aspect ratio was attained by using end walls. The oscillation axis passed through the forward quarter chord and the aerodynamic lift force was measured by means of an apparatus based on the same principle as previously described. In these tests, only the phase displacement between the lift and the rotation was measured and the values shown in figure 20 were obtained; the continuous lines give the values of the theory of the infinite wing and the dotted line give the values obtained from the Torino tests. The scatter of the test points is large for the high values of ω; that is, for the tests conducted at low velocity.

Because of the small number of the results that are available, no deductions of a conclusive character can be given. The different conditions under which the tests were conducted also does not provide a good basis for comparing the different results.

The tests in which the conditions for a check of the theory of the oscillating wing of infinite aspect ratio were best realized are those of the Guggenheim laboratory. The comparison is not, however, completely satisfying. The probable cause of the divergence encountered seems to lie in the agglomeration and dissipation of the wake vortices, the mutual positions and intensities of which the theory assumes to be maintained indefinitely. The problem should be investigated more

---

[18]The theoretical curves of the graphs of reference 53 do not coincide with those given in figures 18 and 19 because the aerodynamic inertia effect represented by the terms in ω^2 in the expressions of the derivatives is not considered. In fact, this action, which remains unchanged with and without wind, is already compensated in the preliminary operation of putting the center of gravity on the axis of rotation, a compensation that, it seems, was effected under dynamic conditions. The correction is small and makes the test points approach the theory more closely.

thoroughly, especially in an experimental manner. The verification of the theory of the infinite wing is less urgent, however, than the investigation of the finite wing, particularly for the phenomenon of wing vibration, in which, because the motion is more pronounced toward the tip of the wing, the conditions are considerably removed from two-dimensional motion. This limiting case is also difficult to obtain experimentally because of the considerable importance assumed by the wake over a large distance behind the wing. The Torino tests make use, however, of low aspect ratios for which the approximations of the theory of reference 31 are less justified for giving an account of the results of such tests. There would therefore be required: First, a perfecting of the theory of the oscillating wing of finite aspect ratio; and second, the extension of tests to wings of greater aspect ratio. The range of angle of attack within which the coefficients can be held constant must be defined and the field of coefficients relative to the oscillating wing with flap must be investigated.

Translated by S. Reiss
National Advisory Committee
for Aeronautics.

REFERENCES

1. Possio, Camillo: L'azione aerodinamica sul profilo oscillante in un fluido compressible a velocità iposonora. L'Aerotecnica, vol. XVIII, fasc. 4, Aprile 1938, P. 441-458.

2. Cicala, P.: Le azioni aerodinamiche sul profilo oscillante. L'Aerotecnica, vol. XVI, fasc. 8-0, Agosto-Sett. 1936, P. 652-655.

3. Birnbaum, Walter: Das ebene Problem des schlagenden Flügels. Z.f.a.M.M., Bd. 4, Heft 4, Aug. 1924, S. 277-292.

4. Theodorsen, Theodore: General Theory of Aerodynamic Instability and the Mechanism of Flutter. NACA Rep. 496, 1935.

5. Schwarz, L.: Berechnung der Druckverteilung einer harmonisch sich verformenden Tragfläche in ebener Strömung. Luftfahrtforschung, Bd. 17, Lfg, 11/12, Dez. 10, 1940, S. 379-386.

6. Söhngen, Heinz: Bestimmung der Auftriebsverteilung für beliebige instationäre Bewegungen (Ebenes Problem). Luftfahrtforschung, Bd. 17, Lfg. 11/12, Dez. 10, 1940, S. 401-420.

7. von Kármán, Th., and Sears, W. R.: Airfoil Theory for Non-Uniform Motion. Jour. Aero. Sci., vol. 5, no. 10, Aug. 1938, pp. 379-390.

8. Küssner, Hans Georg: Schwingungen von Flugzeugflugeln. Luftfahrtforschung, Bd. 4, Heft 2, Juni 10, 1929, S. 41-62.

9. Cicala, P.: Le azioni aerodianamiche sui profili di ala oscillanti ecc. Memorie d. Reale Acc. della Sci. di Torino, 1935.

10. Possio, C.: Sul problema del moto discontinuo di un'ala. Nota 1. L'Aerotecnica, vol. XX, fasc. 9, Sett. 1940, P. 655-681.

11. Pistolesi, E.: Aerodinamica.

12. Wagner, Herbert: Über die Entstehung des dynamischen Auftriebes von Tragflügeln. Z.f.a.M.M., Bd. 5, Heft 1, Feb. 1925, S. 17-35.

13. Küssner, H. G.: Das zweidimensionale Problem der beliebig bewegten Tragfläche unter Berücksichtigung von Partialbewegungen der Flüssigkeit. Luftfahrtforschung, Bd. 17, Lfg. 11/12, Dez. 10, 1940, S. 355-361.

14. Cicala, P.: Ricerche sperimentali sulle azioni aerodynamiche sopra l'ala oscillante. L'Aerotecnica, vol. XVII, fasc. 5, Maggio 1937, P. 405-414.

15. Kassner, R., and Fingado, H.: The Two-Dimensional Problem of Wing Vibration. R.A.S. Jour., vol. XLI, Oct. 1937, pp. 921-944.

16. Krall, G.: Problemi non stazionari dell'idrodinamica. Pubbl. dell'Inst. Naz. per appl. del Calcolo, n. 26, 1938.

17. Küssner, H. G., and Schwarz, I.: The Oscillating Wing with Aerodynamically Balanced Elevator. NACA TM 991, 1941.

18. Glauert, H.: The Accelerated Motion of a Cylindrical Body through a Fluid. R. & M. No. 1215, Jan. 1929.

19. Lamb, H.: The Hydrodynamic Forces on a Cylinder Moving in Two Dimensions. R. & M. No. 1218, Feb. 1929.

20. Glauert, H.: The Force and Moment on an Oscillating Aerofoil. R. & M. No. 1242, March 1929.

21. Küssner, H.G.: Zusammenfassender Bericht über den instationären Auftrieb von Flügeln. Luftfahrtforschung, Bd. 13, Nr. 12, Dez. 20, 1936, S. 410-424.

22. Küssner, H. G.: Status of Wing Flutter. NACA TM 782, 1936.

23. Küssner, H. G.: Untersuchung der Bewegung einer Platte beim Eintritt in eine Strahlgrenze. Luftfahrtforschung, Bd. 13, Nr. 12, Dez. 20, 1936, S. 425-429.

24. Dietze, F.: Zur Berechnung der Auftriebskraft am schwingenden Ruder. Luftfahrtforschung, Bd. 14, Lfg. 7, Juli 20, 1937, S. 361-362.

25. Dietze, F.: Die Luftkräfte der harmonisch schwingenden, in sich verformbaren Platte (Ebenes Problem). Luftfahrtforschung, Bd. 16, Lfg. 2, Feb. 20, 1939, S. 84-96.

26. v. Borbély: Mathematischer Beitrag zur Theorie der Flügelschwingungen. Z.f.a.M.M., Bd. 16, Heft 1, Feb. 1936, S. 1-4.

27. Ellenberger, G.: Luftkräfte bei beliebig instationärer Bewegung eines Tragflügels mit Querruder und bei Vorhandensein von Böen. Z.f.a.M.M., Bd. 18, Heft 3, Juni 1938, S. 173-176.

28. Jaeckel, K.: Über die Kräfte auf beschleunigt bewegte, veränderliche Tragflügelprofile. Ing.-Archiv, Bd. IX, 1938, S. 371-395.

29. Jaeckel, Karl: Über die Bestimmung der Zirkulationsverteilung für den zweidimensionalen Tragflügel bei beliebigen periodischen Bewegungen. Luftfahrtforschung, Bd. 16, Lfg. 3, März 20, 1939, S. 135-138.

30. Lyon, H. M.: A Review of Theoretical Investigations of the Aerodynamical Forces on a Wing in Non-Uniform Motion. R. & M. No. 1786, British A.R.C., April 1937.

31. Garrick, I. E.: On Some Reciprocal Relations in the Theory of Nonstationary Flows. NACA Rep. 629, 1938.

32. Garrick, I. E.: On Some Fourier Transforms in the Theory of Non-Stationary Flows. Proc. Fifth Int. Cong. Appl. Mech. (Cambridge, Mass.), Sept. 12-16, 1938, pp. 590-593.

33. Küssner, H. G.: General Airfoil Theory. NACA TM 979, 1941.

34. Müller, Reinhard: Über die zahlenmässige Beherrschung und Anwendung einiger den Besselschen verwandten Funktionen nebst Bermerkungen zum Gebiet der Besselfunktionen. Z.f.a.M.M., Bd. 19, Nr. 1, Feb. 1939, S. 36-54.

35. Cicala, P.: Le teorie approssimate dell'ala oscillante di allungamento finito. Atti d. Reale Acc. della Sci. di Torino, 1941.

36. Cicala, P.: Sul moto non stazionario di un'ala di allungamento finito. Rend. Reale Acc. Naz. d. Lincei (Classe Sci. fis., mat. e naturali), vol. XXVI, 1937, P. 97-102.

37. Cicala, P.: Comparison of Theory with Experiment in the Phenomenon of Wing Flutter. NACA TM 887, 1939.

38. v. Borbély: Über einen Grenzfall der instationären raumlichen Tragflügelströmung. Z.f.a.M.M., Bd. 18, Heft 6, Dez. 1938, S. 319-342.

39. Possio, C.: Sulla determinazione dei coefficienti aerodinamici che interessano la stabilita del velivolo. Comm. Acc. Pontificia d. Sci., 1939.

40. Possio, C.: Aerodynamic Forces on a Lifting Surface in Oscillatory Motion. Air Ministry Trans. No. 987, Oscillation Sub-Comm., British A.R.C., Dec. 6, 1939.

41. Possio, Camillo: Determinazione dell'azione aerodinamica corrispondente alle piccole oscillazione del velivolo. L'Aerotecnica, vol. XVIII, fasc. 12, Dic. 1938, P. 1323-1351.

42. Possio, C.: Sul moto non stazionario di una superficie portante. Atti d. Reale Acc. della Sci. di Torino, 1939.

43. Possio, C.: L'azione aerodinamica su di una superficie portante in moto vario. Atti d. Reale Acc. della Sci. di Torino, 1939.

44. Possio, C.: Sul problema del moto discontinuo di un'ala. Nota 2. L'Aerotecnica, vol. XXI, fasc. 3, Marzo 1941, P. 205-230.

45. Sears, William R.: A Contribution to the Airfoil Theory for Non-Uniform Motion. Proc. Fifth Int. Cong. Appl. Mech (Cambridge, Mass.), Sept. 12-16, 1938, pp. 483-487.

46. Schmeidler, Werner: Vortrieb und Widerstand. Z.f.a.M.M., Bd. 19, Heft 2, April 1939, S. 65-86.

47. Poggi, L.: Azione aerodinamiche parallele al movimento su di un'ala animata da moto traslatorio uniforme e da moto oscillatorio. L'Aerotecnica, vol. XI, fasc. 6-7, Guigno-Luglio, 1931, P. 767-779.

48. Garrick, I. E.: Propulsion of a Flapping and Oscillating Airfoil. NACA Rep. 567, 1936.

49. Cicala, P.: Il problema aerodinamico del volo ad ala battente. L'Aerotecnica, vol. XVII, fasc. 11, Nov. 1937, P. 955-960.

50. Frazer, R. A., and Duncan, W. J.: The Flutter of Aeroplane Wings. R. & M. No. 1155, British A.R.C., Aug. 1928.

51. Cicala, P.: Ricerche sperimentali sulle azione aerodinamiche sopra l'ala oscillante (Ser. II). L'Aerotecnica, vol. XVII, fasc. 12, Dic. 1937, P. 1043-1046.

52. Cicala, P.: Ricerche sperimentali sulle azione aerodinamiche sopra l'ala oscillante (Ser. III). L'Aerotecnica, vol. XXI, fasc. 1, Gennaio 1941, P. 46-53.

53. Reid, Elliott G., and Vincenti, Walter: An Experimental Determination of the Lift of an Oscillating Airfoil. Jour Aero. Sci., vol. 8, no. 1, Nov. 1940, pp. 1-6.

54. Silverstein, Abe, and Joyner, Upshur T.: Experimental Verification of the Theory of Oscillating Airfoils. NACA Rep. 673, 1939.

TABLE I

σ	R	σ	R	σ	
0	0.5000	1.7	0.3490	7.5	0.1588
0.1	0.4878	1.8	0.3427	8.0	0.1509
0.2	0.4762	1.9	0.3366	8.5	0.1436
0.3	0.4651	2.0	0.3307	9.0	0.1368
0.4	0.4545	2.1	0.3250	9.5	0.1307
0.5	0.4443	2.2	0.3195	10	0.1250
0.6	0.4346	2.3	0.3141	11	0.1147
0.7	0.4253	2.4	0.3088	12	0.1058
0.8	0.4163	2.5	0.3038	15	0.0852
0.9	0.4077	3.0	0.2805	20	0.0634
1.0	0.3994	3.5	0.2600	25	0.0499
1.1	0.3914	4.0	0.2420	30	0.0408
1.2	0.3837	4.5	0.2261	40	0.0298
1.3	0.3763	5.0	0.2118	50	0.0232
1.4	0.3691	5.5	0.1990	100	0.0109
1.5	0.3622	6.0	0.1875	500	0.0020
1.6	0.3555	6.5	0.1770	1000	0.0010
		7.0	0.1675	∞	0.0000

TABLE II

s_1	R_1	s_1	R_1	s_1	R_1
0	0.0000	1.7	1.0356	8.5	1.6642
0.1	0.2824	1.8	1.0586	9.0	1.6817
0.2	0.3961	1.9	1.0806	9.5	1.6976
0.3	0.4812	2.0	1.1016	10	1.7123
0.4	0.5513	2.5	1.1942	10.5	1.7258
0.5	0.6116	3.0	1.2703	11	1.7382
0.6	0.6649	3.5	1.3344	12	1.7603
0.7	0.7128	4.0	1.3891	16	1.8235
0.8	0.7563	4.5	1.4364	20	1.8624
0.9	0.7964	5.0	1.4777	25	1.8934
1	0.8334	5.5	1.5140	30	1.9135
1.1	0.8678	6.0	1.5463	40	1.9380
1.2	0.9001	6.5	1.5750	50	1.9520
1.3	0.9303	7.0	1.6008	100	1.9778
1.4	0.9588	7.5	1.6241	500	1.9958
1.5	0.9858	8 0	1.6451	1000	1.9980
1.6	1.0113	—	—	∞	2.0000

TABLE I

$\bar{\omega}$	$1-\lambda'$	λ''	$\bar{\omega}$	$1-\lambda'$	λ''
0	1.0000	0	0.62	0.5757	0.1354
0.002	0.9967	0.0126	0.64	0.5727	0.1330
0.01	0.9826	0.0456	0.66	0.5699	0.1308
0.02	0.9637	0.0752	0.68	0.5673	0.1286
0.04	0.9267	0.1160	0.70	0.5648	0.1264
0.06	0.8920	0.1426	0.72	0.5624	0.1243
0.08	0.8604	0.1604	0.74	0.5602	0.1223
0.10	0.8319	0.1723	0.76	0.5581	0.1203
0.12	0.8063	0.1801	0.78	0.5561	0.1184
0.14	0.7834	0.1849	0.80	0.5541	0.1165
0.16	0.7628	0.1876	0.82	0.5523	0.1147
0.18	0.7443	0.1887	0.86	0.5490	0.1112
0.20	0.7276	0.1886	0.90	0.5459	0.1078
0.22	0.7125	0.1877	0.94	0.5432	0.1047
0.24	0.6989	0.1862	0.98	0.5406	0.1017
0.26	0.6865	0.1842	1.00	0.5394	0.1003
0.28	0.6752	0.1819	1.1	0.5342	0.0936
0.30	0.6650	0.1793	1.2	0.5300	0.0877
0.32	0.6556	0.1766	1.3	0.5265	0.0825
0.34	0.6469	0.1738	1.4	0.5235	0.0778
0.36	0.6309	0.1709	1.5	0.5210	0.0735
0.38	0.6317	0.1679	1.6	0.5189	0.0697
0.40	0.6250	0.1650	1.7	0.5171	0.0663
0.42	0.6187	0.1621	1.8	0.5155	0.0632
0.44	0.6130	0.1592	1.9	0.5142	0.0603
0.46	0.6076	0.1563	2.0	0.5130	0.0577
0.48	0.6026	0.1535	2.5	0.5087	0.0473
0.50	0.5979	0.1507	3.0	0.5063	0.0400
0.52	0.5936	0.1480	3.5	0.5047	0.0346
0.54	0.5895	0.1454	4.0	0.5037	0.0305
0.56	0.5857	0.1428	4.5	0.5029	0.0273
0.58	0.5822	0.1402	5.0	0.5024	0.0246
0.60	0.5788	0.1378	10.0	0.5006	0.0124
			>10	$0.5000 + 1/16\,\bar{\omega}^2$	$1/8\,\bar{\omega}$

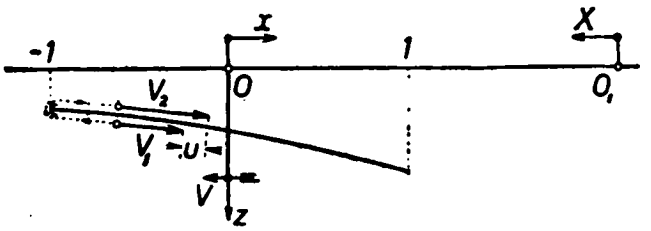

Fig. 1.

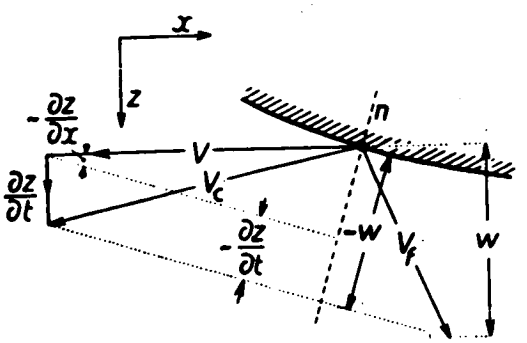

Fig. 2.

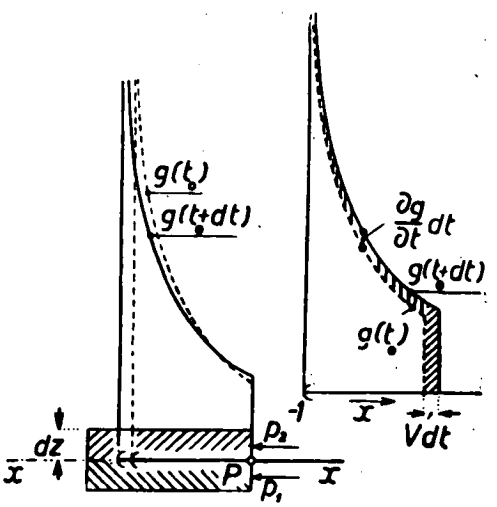

Fig. 3.

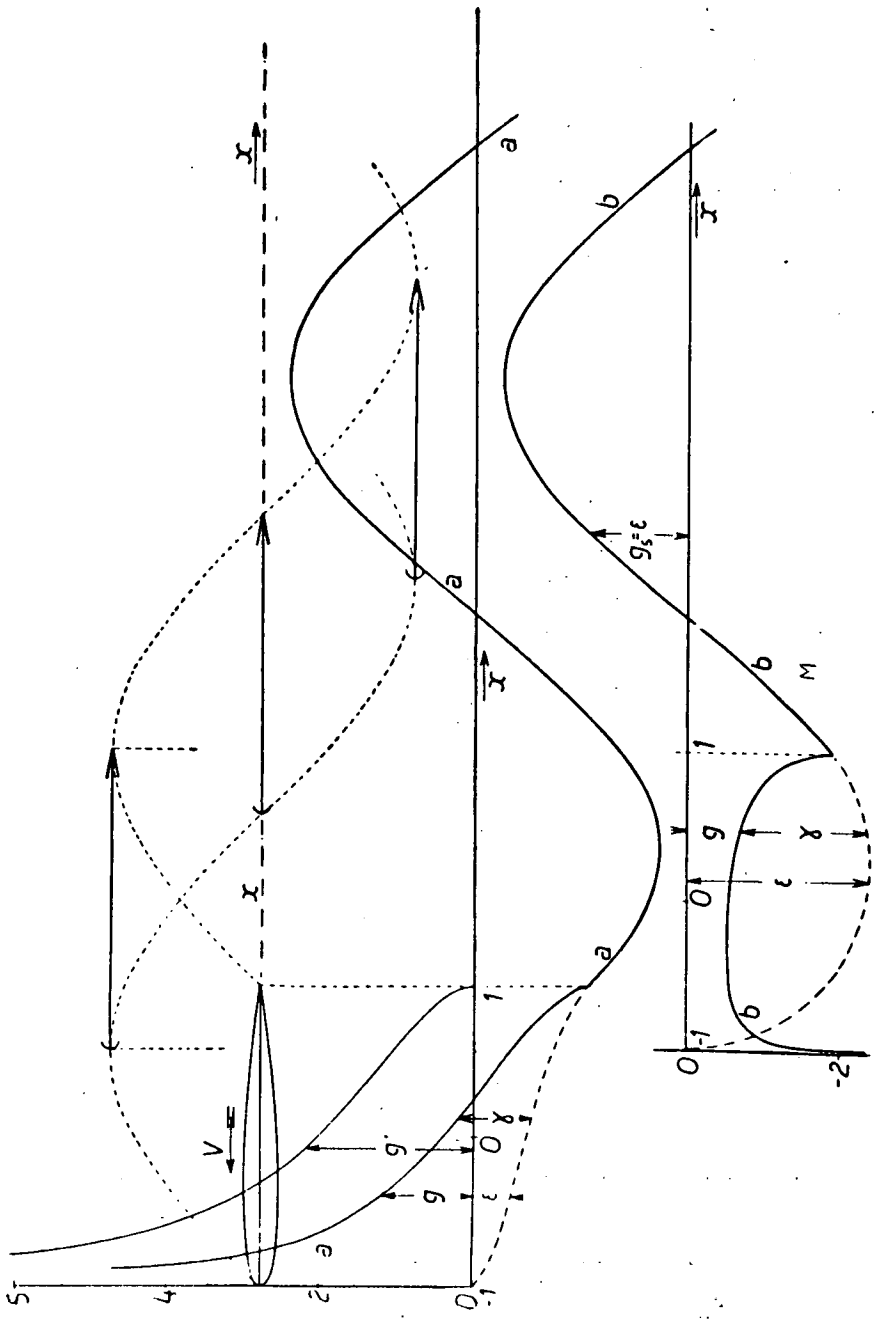

Fig. 4.

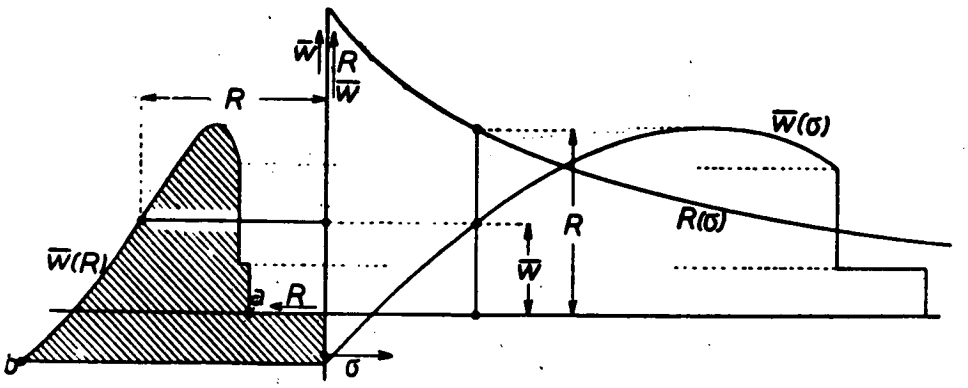

Fig. 5.

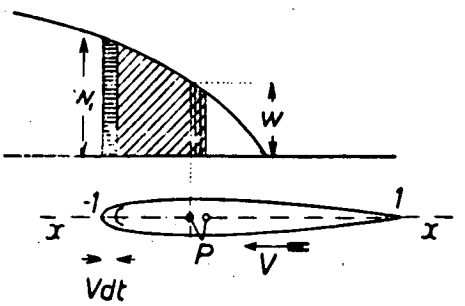

Fig. 6.

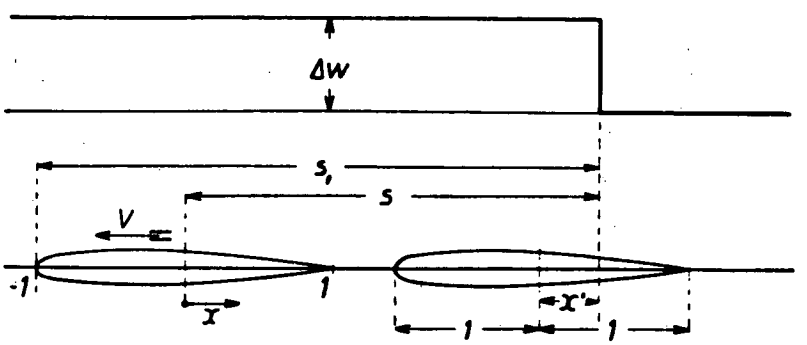

Fig. 7.

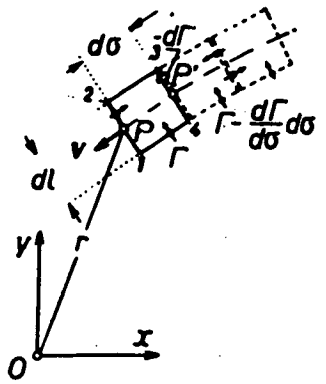

Fig. 8.

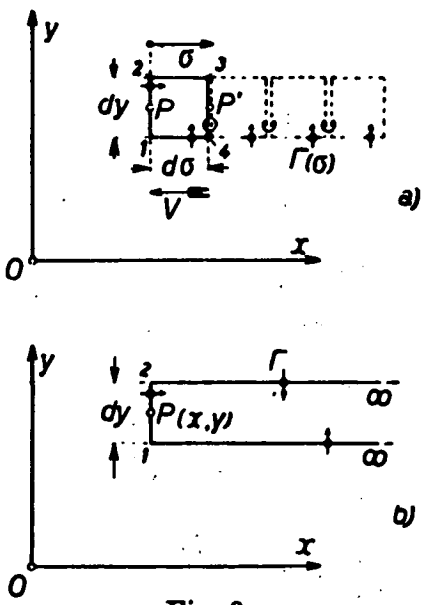

Fig. 9.

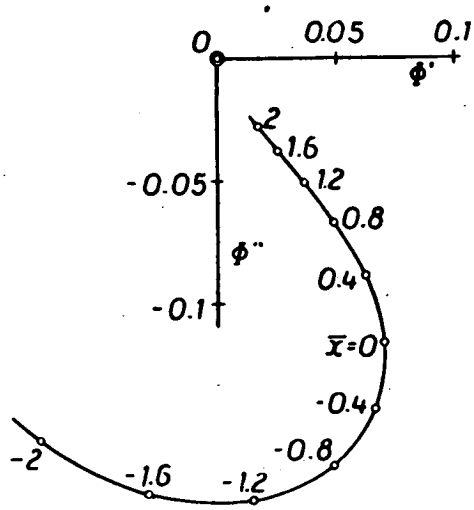
0
0.05
0.1
Φ'
2
1.6
1.2
0.8
0.4
$\bar{x}=0$
-0.4
-0.8
-1.2
-1.6
-2
-0.05
-0.1
Φ''

Fig. 10.

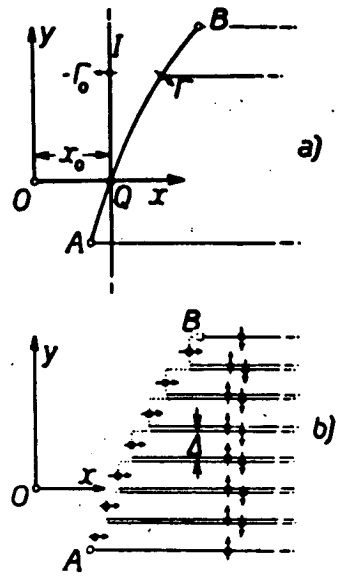
y
B
I
$-\Gamma_0$
Γ
x_0
a)
O
Q
x
A
B
y
b)
Δ
x
O
A

Fig. 11.

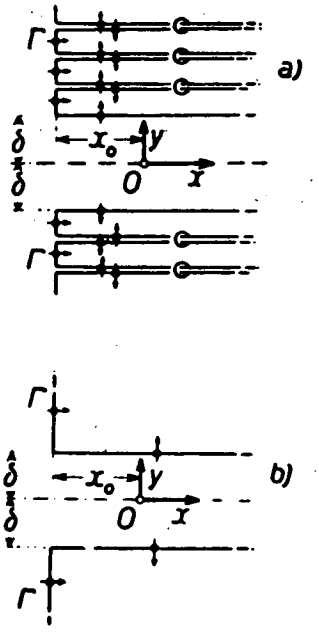
Γ
a)
δ
x_0
y
0
x
δ
Γ
Γ
δ
x_0
y
b)
0
x
δ
Γ

Fig. 12.

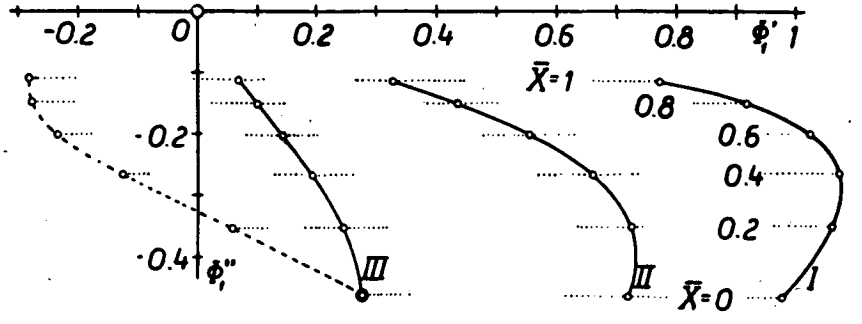
-0.2
0
0.2
0.4
0.6
0.8
Φ_1' 1
$\bar{X}=1$
0.8
0.6
0.4
0.2
-0.2
-0.4
Φ_1''
III
III
$\bar{X}=0$
I

Fig. 13.

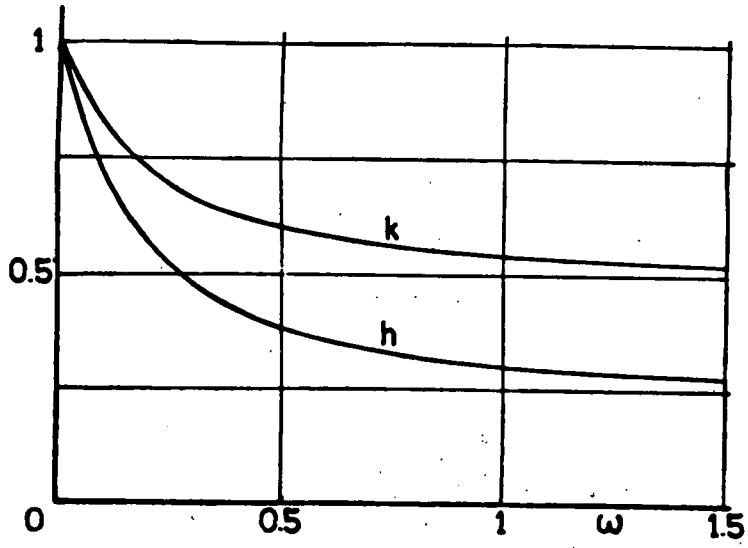
1
0.5
0
0.5
1
ω
1.5
k
h

Fig. 14.

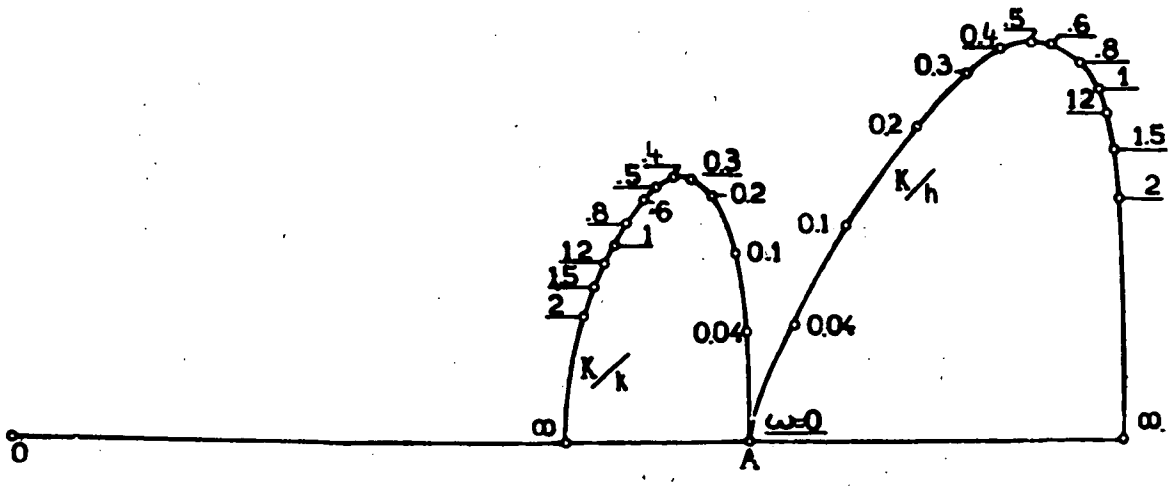
0
∞
A
ω=0
∞
K/k
K/h
0.04
0.1
0.2
0.3
.4
.5
.6
.8
1
1.2
1.5
2
0.04
0.1
0.2
0.3
0.4
.5
.6
.8
1
1.2
1.5
2

Fig. 15.

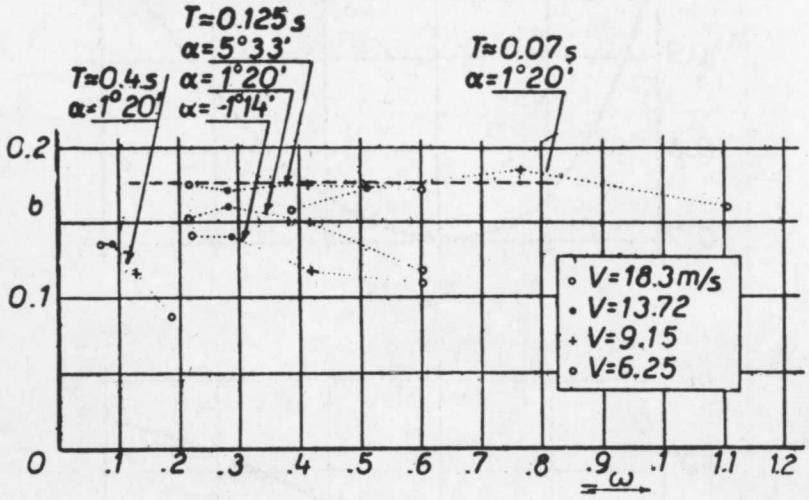
T=0.125s
α=5°33'
α=1°20'
α=-1°14'
T=0.4s
α=1°20'
T=0.07s
α=1°20'
0.2
b
0.1
0
.1
.2
.3
.4
.5
.6
.7
.8
.9
1
1.1
1.2
ω
V=18.3m/s
V=13.72
V=9.15
V=6.25

Fig. 16.

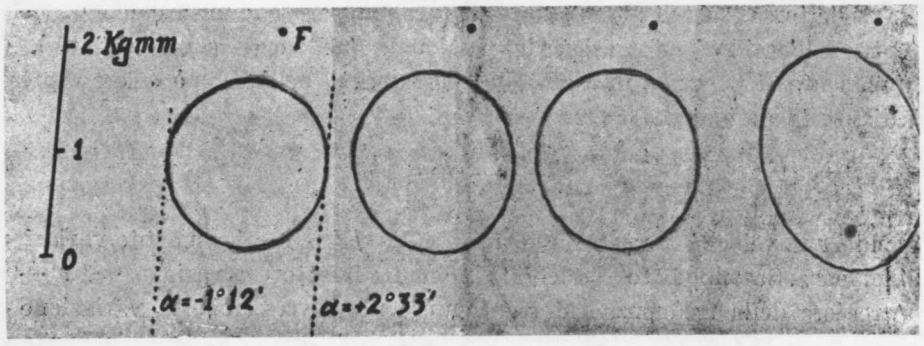
2 Kgmm
F
1
0
α=-1°12'
α=+2°33'

Fig. 17.

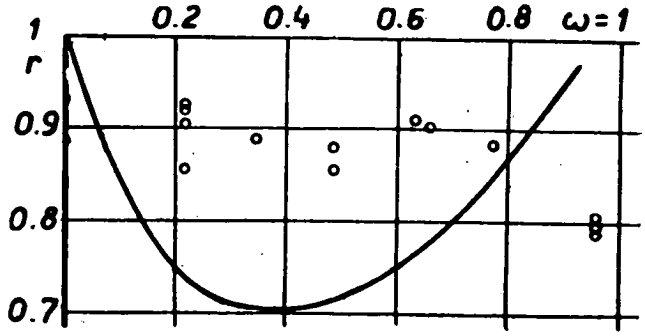

Fig. 18.

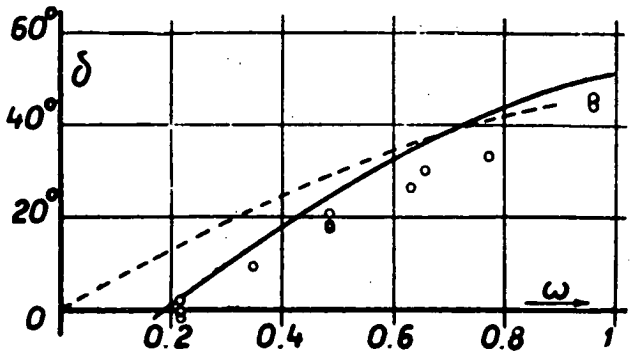

Fig. 19.

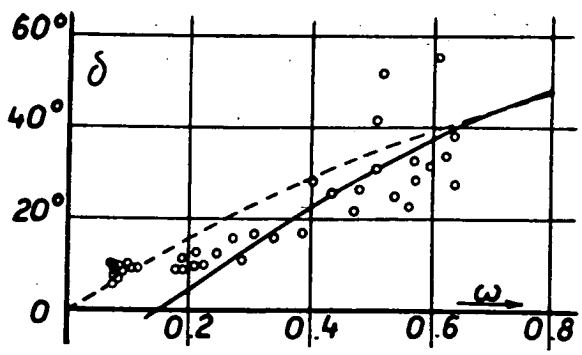

Fig. 20.