SA21/Otto K. Goetz

Rocketdyne Division
Rockwell International Corporation
6633 Canoga Avenue
Canoga Park, California 91304

Telex: 698478
ROCKETDYN CNPK

Rockwell International

NAS8-40000

15 July 1993

In reply refer to 93RC07449

National Aeronautics and Space Administration
George C. Marshall Space Flight Center
Marshall Space Flight Center, Alabama 35812

Attention: Repository, CN22D

Subject: STS-55 Pad Abort, Engine 2011 Oxidizer Preburner Augmented Spark Igniter Check Valve Leak
Report RSS-8898

To whom it may concern:

We are transmitting copies of the final report on STS-55 pad abort for your information and retention.

Very Truly Yours,

ROCKWELL INTERNATIONAL CORPORATION
Rocketdyne Division

J. S. Beitzel
Manager
SSME System Safety

JSB:vlf

cc: National Aeronautics and Space Administration
Marshall Space Flight Center, AL 35812
Attn: O. Goetz, SA21
C. Verschoore, EP01
M. Leberman, EE23
J. Laszar, EP64
M. Kynard, EP52
B. Mix, SA21
A. McCool, SA01
R. Leonard, CS01
D. Martin, CT21

(NASA-CR-193830) STS-55 PAD ABORT: ENGINE 2011 OXIDIZER PREBURNER AUGMENTED SPARK IGNITER CHECK VALVE LEAK Final Report (Rockwell International Corp.) 132 p

N94-12806

Unclas

G3/16 0184986

Rockwell International

Rocketdyne Division
6633 Canoga Avenue
Canoga Park, California 91304

RSS-8898

STS-55 PAD ABORT

3-22-93

ENGINE 2011
OXIDIZER PREBURNER
AUGMENTED SPARK IGNITER
CHECK VALVE LEAK

PREPARED BY

JOINT ROCKETDYNE/MSFC
INVESTIGATION TEAM

APPROVED BY

B. K. WOOD
VICE PRESIDENT
ENGINEERING & TEST

STS-55 PAD ABORT
FINAL REPORT

INTRODUCTION 1-1

TEAM RECOMMENDATIONS 2-1

FAILURE TREE DESCRIPTION 3-1

FAILURE SIGNATURE CORRELATION 4-1

OXIDIZER PREBURNER AUGMENTED SPARK IGNITER PURGE
CHECK VALVE FAILURE ANALYSIS 5-1

MATERIALS ANALYSIS 6-1

BUNA-N (NITRILE) IGNITION ANALYSIS 7-1

LEVEL-I (L-2) CLOSEOUT BRIEFING 8-1

Section 1.0

Introduction

STS-55 PAD ABORT FINAL REPORT
- INTRODUCTION -

The STS-55 initial launch attempt of Columbia (OV102) was terminated on KSC launch pad A March 22, 1993 at 9:51 AM E.S.T. due to violation of an ME-3 (Engine 2011) Launch Commit Criteria (LCC) limit exceedance. The event description and timeline are summarized in Figure 1.

Propellant loading was initiated on 22 March, 1993 at 1:15 AM EST. All SSME chill parameters and launch commit criteria (LCC) were nominal. At engine start plus 1.44 seconds a Failure Identification (FID) was posted against Engine 2011 for exceeding the 50 psia Oxidizer Preburner (OPB) purge pressure redline. The engine was shut down at 1.50 seconds followed by Engines 2034 and 2030. All shut down sequences were nominal and the mission was safely aborted. Figure 2 depicts the OPB purge pressure redline violation, and Figure 3 depicts the abort profile/overlay for all three engines.

SSME Avionics hardware and software performed nominally during the incident. A review of vehicle data table (VDT) data and controller software logic revealed no failure indications other than the single FID 013-414, OPB purge pressure redline exceeded. Software logic was executed according to requirements and there was no anomalous controller software operation.

Immediately following the abort, a Rocketdyne/NASA failure investigation team was assembled (Table I). The team successfully isolated the failure cause to the oxidizer preburner augmented spark igniter purge check valve not fully closed due to contamination. The source of the contaminant was traced to a cut segment from a rubber O-ring which was used in a fine clean tool during valve production prior to 1992. The valve was apparently contaminated during its fabrication in 1985. The valve had performed acceptably on four previous flights of the engine, and SSME flight history shows 780 combined check valve flights without failure.

The failure of an Engine 3 (SSME No. 2011) check valve to close was sensed by on-board engine instruments even though all other engine operations were normal. This resulted in an engine shutdown and safe sequential shutdown of all three engines prior to ignition of the solid boosters.

COLUMBIA STS-55 ABORT
SSME TIMELINE

03/26/93

GMT DAY : HR : MIN : SEC	EVENT	ME-1 (2030) TIME (SEC)	ME-2 (2034) TIME (SEC)	ME-3 (2011) TIME (SEC)
81 : 14 : 47 : 0.323	ME-1 PSN4	-233.36	------	------
81 : 14 : 47 : 0.516	ME-2 PSN4	------	-233.06	------
81 : 14 : 47 : 0.664	ME-3 PSN4		------	-232.79
81 : 14 : 48 : 5.456	ME-1 GN2 OFF	-168.00	-168.00	-168.00
81 : 14 : 49 : 27.268	ME-1 ENGINE READY	-86.40	-----	-----
81 : 14 : 49 : 27.319	ME-2 ENGINE READY	-----	-86.26	-----
81 : 14 : 50 : 27.299	ME-3 ENGINE READY	-----	-----	-86.16
81 : 14 : 50 : 50.527	ME-1 STEN	-3.16	----	----
81 : 14 : 50 : 50.537	ME-3 STEN	----	----	-2.92
81 : 14 : 50 : 50.560	ME-3 STEN	----	-3.02	----
81 : 14 : 50 : 53.456	ME-3 ENGINE START	----	----	0.00
81 : 14 : 50 : 53.579	ME-2 ENGINE START	----	0.00	----
81 : 14 : 50 : 53.687	ME-1 ENGINE START	0.00	----	----
81 : 14 : 50 : 54.856	ME-3 OPB PURGE PR > 50 PSIA (STRIKE #1, 50.3 PSIA)	----	----	1.40
81 : 14 : 50 : 54.895	ME-3 FID 013-414 POSTED, (OPB PRG PR = 55.1)	----	----	1.44
81 : 14 : 50 : 54.955	ME-3 SHUTDOWN (SSMEC INITIATED)	----	----	1.50
81 : 14 : 50 : 55.015	ME-3 FPB PURGE PR > 50 PSIA (53.7 PSIA)	----	----	1.56
81 : 14 : 50 : 55.255	ME-3 MAXIMUM OPB PURGE PR (111.2 PSIA)	----	----	1.80
81 : 14 : 50 : 55.255	ME-3 MAXIMUM FPB PURGE PR (90.4 PSIA)	----	----	1.80
81 : 14 : 50 : 55.276	ME-3 MAXIMUM MCC Pc (575.75 PSIA)	----	----	1.82
81 : 14 : 50 : 56.279	ME-2 SHUTDOWN (ORBITER GPC INITIATED)	----	2.70	----
81 : 14 : 50 : 56.300	ME-2 MAXIMUM MCC Pc (1277.88 PSIA)	----	2.74	----
81 : 14 : 50 : 57.526	ME-1 SHUTDOWN (ORBITER GPC INITIATED)	3.84	----	----
81 : 14 : 50 : 57.627	ME-1 MAXIMUM MCC Pc (2889.25 PSIA)	3.94	----	----
81 : 14 : 51 : 0.056	PREDICTED T-0	6.36	6.48	6.60
81 : 14 : 51 : 11.175	ME-3 POST SHUTDOWN STANDBY	----	----	17.72
81 : 14 : 51 : 12.480	ME-2 POST SHUTDOWN STANDBY	----	18.90	----
81 : 14 : 51 : 13.727	ME-1 POST SHUTDOWN STANDBY	20.04	----	----

55ABRTLN.TBL

FIGURE 1

Rockwell International
Rocketdyne Division

OPB PURGE PRESSURE
REDLINE VIOLATION

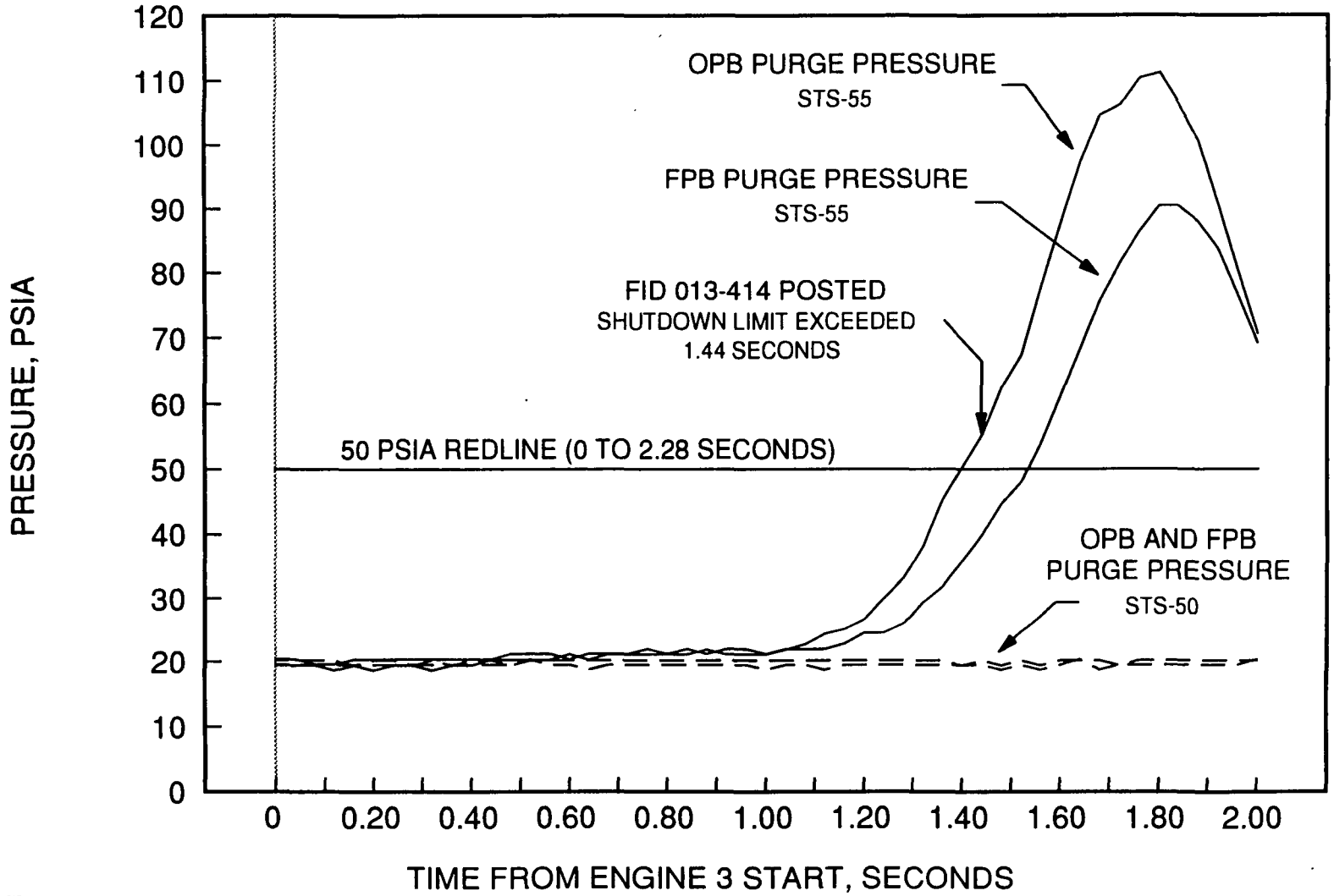

Rockwell International
Rocketdyne Division

FIGURE 2

A:\PBPPR1.DRW

MAIN COMBUSTION CHAMBER PRESSURE

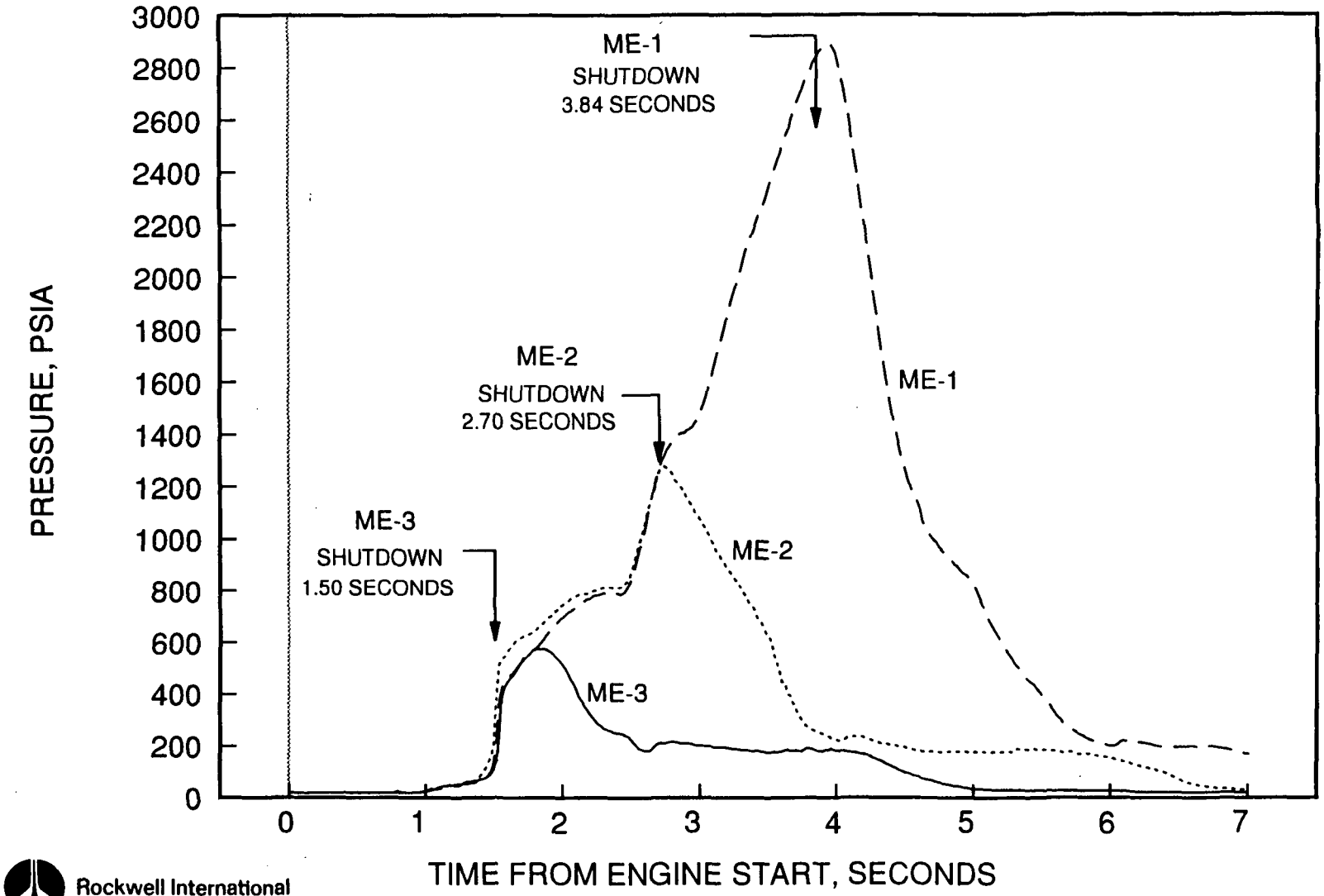

Rockwell International
Rocketdyne Division

FIGURE 3

A:\55MCCPC.DRW

INVESTIGATION TEAM

BYRON WOOD

ROCKETDYNE	NASA
JOHN PLOWDEN	CHUCK VERSCHOORE (NASA)
PAUL SEITZ	MIKE LEBERMAN (NASA)
GARY SMITH	JOHN LASZAR (NASA)
LORIN BLEWETT	MIKE KYNARD (NASA)
VINCE WHEELOCK	

• FAULT TREE	PHIN JONES
• DATA/TIMELINE	ERICH ESPENSCHIED MIKE CARLSON
• TEST CORRELATIONS	CRAIG STOKER
• VALVE DESIGN/DISASSEMBLY	BEN ODLE ART HILL AL OLSEN TOM LEE FRAN DOEHRER JOHN SCHNEIDER SANDY PETERSON
• AVIONICS	TED SCHULDT
• RELIABILITY	MARC BOUFFARD PAT O'KELLEY
• MATERIALS ASSESSMENT	JON FRANDSEN SUSAN STERN
• TRANSIENT ANALYSIS	RICH NELSON
• TURNAROUND REQUIREMENTS	SCOT BOTTEMILLER
• THERMAL ANALYSIS	JOHN FASHEH REY PRINCIPE TRI TRAN JIM JEPSKY DENNIS ROMINE
• SAFETY & FINAL REPORT	JIM BEITZEL/JOE MARDON

NOTE: Dr. Walter Williams (consultant to Aerospace Safety Advisory Board) was an observer in most team activities.

Section 2.0

Team Recommendations

STS-55 ON-PAD ABORT
TEAM FINDINGS & RECOMMENDATIONS

Tables 1 and 2 summarize key generic findings of the team, and expected corrective actions. Many of these actions were put in place after two contaminated valve cases during build were discovered in July of 1991.

Tables 3 thru 8 summarize the combined recommendations of the team for near term and long term action. The SSME Program should give serious and timely consideration to all of these recommendations.

Figure 1 summarizes check valve combined leakage data thru May 1993 and clearly illustrates the need to evaluate several check valve sets in the fleet. While the screening process recommended does not ensure contamination free operation it does provide a high degree of confidence to minimize the potential for PAD-ABORT. The team does not recommend the removal and replacement of valves in the field if they pass the defined screening process on the basis this issue is not a safety-of-flight concern.

Figure 2 on a conservative analysis basis dramatically illustrates the leakage sensitivity of the check valves to very small contamination levels which could result in limit exceedance. Limit settings of 50, 100 and 300 psi are shown. This necessitates clear action be taken to either desensitize the system to critical leakage, seek better redline monitoring and settings or take steps to further protect and preclude contamination entry in the first place.

The analysis results shown in Figure 3 illustrates the limitations on the FPB Augmented Spark Igniter (ASI) check valve stroke to preclude critical failure backflow with the present system. Table 9 provides the backflow margin for the other four valves in the oxidizer system. In Figure 4 a redline setting on the order of 700 psi would preclude an unnecessary pad abort for three of the five valves in the system.

Under lessons learned the team found that work in the boattail is very difficult, brings with it non-standard conditions and can have negative results. During the course of this investigation it was discovered that the leak check configuration in the boattail allowed for a parasitic leak path from HPOTP intermediate seal. Combined CV leak checks with this condition resulted in misleading data and resulted in unnecessary isolation leak checks on Engine 2024. During the isolation leak checks, which required the system to be opened up, contamination was inadvertently introduced into the system and subsequently resulted in the replacement of an otherwise acceptable check valve. The program should avoid the violation of closed systems to the maximum extent possible.

STS-55 ABORT FINDINGS
GENERIC ACTIONS

FABRICATION TOOL DESIGN

- IMPROVE DESIGN & SYSTEMS INTEGRATION TRAINING
- INCLUDE FAB PROCESS CRITICALITY ANALYSIS IN DESIGN REVIEW
- ASSESS ENVIRONMENT & KEY SKILLS FOR CONTAMINATION SENSITIVE FABRICATION TOOLING INSTALLATIONS

CHECK VALVE DESIGN

- DESIGN TRAINING SHOULD INCLUDE SYSTEMS SENSITIVITY TO CONTAMINATION ISSUES FAB & FIELD APPLICATION
- FABRICATION PLANS SHOULD INCLUDE PROCESS CRITICALITY ANALYSIS

TABLE 1

STS-55 ABORT FINDINGS
GENERIC ACTIONS

PERIODIC PERFORMANCE/INTEGRITY TESTS IN THE FIELD

- KEY DATA TAKEN PERIODICALLY IN THE FIELD SHOULD BE SUBJECT TO TREND & STATISTICAL NORMAL ANALYSIS
- SPECIFICATION LIMITS SHOULD BE ADJUSTED TO REFLECT THE ABOVE
- ACTIONS SHOULD BE PUT IN PLACE AS CONTINGENCY FOR OUT OF TOLERANCE EVENTS

VIOLATION OF CRITICAL PERFORMANCE PARAMETERS

- CRITERIA FOR UCR PREPARATION SHOULD CLEARLY IDENTIFY CRITICAL PERFORMANCE PARAMETERS FOR ASSESSMENT INDEPENDENT OF WHEN OR WHERE THEY OCCUR

TABLE 2

STS-55 ON-PAD ABORT TEAM
NEAR TERM RECOMMENDATIONS

1.0 2109, 2012, 2017, 2019, 2030, 2031 (NEAR NOMINAL LEAK HISTORY)

1.1 COMPLETE MINIMUM OF 8 TOTAL GN_2 PURGE FLOW/COMBINED LEAK CHECK (25 psig He) CYCLES (VENTED SUPPLY) AT KSC IF 8 ACCUMULATED, CONDUCT AT LEAST ONE GN_2 PURGE FLOW/COMBINED LEAK CHECK CYCLE PRIOR TO EACH FLIGHT

1.2 PERFORM ISOLATION LEAK CHECKS (25 psig He) IF COMBINED LEAKAGE IN ANY CYCLE > 7 SCIM. REPLACE ANY VALVE > 5 SCIM. COMPLETE 8 TOTAL CYCLES TO SAME REQUIREMENTS WITH REPLACEMENTS INSTALLED

1.3 INDIVIDUAL CHECK VALVE ISOLATION LEAKAGE SUM MUST MATCH COMBINED LEAKAGE WITHIN 3 SCIM OR CONDUCT ADDITIONAL CYCLES

1.4 IF COMBINED LEAK CHECK >11 SCIM AND NO ISOLATED VALVE >5 SCIM OR ITEM 1.3 CANNOT BE SATISFIED, REPLACE ALL CHECK VALVES

TABLE 3

STS-55 ON-PAD ABORT TEAM
NEAR TERM RECOMMENDATIONS

2.0 2011, 2022, 2026, 2027, 2028, 2029, 2032, 2034, 2035 (SUSPECT LEAK HISTORY OR MISSING ALIGNMENT PIN HISTORY)

2.1 CONDUCT MINIMUM OF 8 GN_2 PURGE FLOW/ COMBINED LEAK CHECK (25 psig He) CYCLES KSC ENG SHOP TO SAME REQUIREMENTS OF 1.2 THRU 1.4 CONDUCT AT LEAST ONE GN_2 PURGE FLOW/COMBINED LEAK CHECK CYCLE PRIOR TO EACH FLIGHT

3.0 IDENTIFY TWO FULL FLIGHT SPARE SETS

3.1 CONDUCT MINIMUM OF 8 GN_2 PURGE FLOW/LEAK CHECK (25 psig He) CYCLES CANOGA PARK. REJECT ANY VALVE >5 SCIM

TABLE 4

STS-55 ON-PAD ABORT TEAM
NEAR TERM RECOMMENDATIONS

4.0 FLEET SUPPORT

4.1 ELIMINATE USE OF TOOLS, FIXTURES & SHOP AIDS CONTAINING NON-LOX COMPATIBLE MATERIALS - ALL SITES & VALVE ROOM

4.2 ELIMINATE USE OF ISOLATION TEST AIDS (SUCH AS TEFLON BLANKING SHEETS) WHICH ARE SOURCES FOR CONTAMINATION - ALL SITES & VALVE ROOM

4.3 ESTABLISH MOST RELIABLE/COST EFFECTIVE COMBINED AND ISOLATION LEAK CHECK PROCEDURE FOR USE IN BUILD AND AT KSC AND SSC

4.4 ISSUE CHECK VALVE BUILD STOP ORDER TO VALVE ROOM

4.5 RECYCLE ALL IN-BUILD & FLIGHT SPARE VALVES (EXCLUDES 3.0) PER REVISED CLASS-I VALVE BUILD UPGRADE REQUIREMENTS

4.6 EXPEDITE VALVE UPGRADE DEFINITION, IMPLEMENT AND RETROFIT FLEET ASAP

4.7 ANY CHECK VALVE EXPOSED TO GREEN RUN HOTFIRE MUST PASS GN_2 PURGE FLOW CYCLE/LEAK CHECK REQUIREMENTS PER ITEM 4.3 PRIOR TO GOVERNMENT ACCEPTANCE

TABLE 5

STS-55 ON-PAD ABORT TEAM
LONG TERM RECOMMENDATIONS

VALVE BUILD UPGRADE

- IMPROVE FLUSH AT VALVE/LINE ASSEMBLY LEVEL
- PERFORM COMPONENT LEVEL (LINE ASSY) ACTUATION CYCLE/LEAK CHECKS AT 25 psig He (8 CYCLE MINIMUM)
- ALLOWABLE DELIVERED LEAKAGE < THREE (3) SCIMS AT 25 psig He
- INCLUDE NEW OR RECYCLE BUILD FUEL SYSTEM PURGE CHECK VALVES IN THIS ACTIVITY

TOOLING/FIXTURES

- ELIMINATE ALL NON-LOX COMPATIBLE MATERIALS (ENTIRE SSME)
- ELIMINATE/MINIMIZE POTENTIAL FOR BUILD OR TEST CONTAMINATION INGESTION
- MODIFY ENGINE THROAT PLUG TO PERMIT GN_2 CYCLING AND LEAK CHECKS WITH SINGLE THROAT PLUG INSTALLATION

SPEC CHANGES - ALLOWABLE LEAKAGE & TEST REQUIREMENTS

- VALVE BUILD, SSC, KSC LEAK CHECK PROCEDURES MUST BE CONSISTENT
- IMPROVE SYSTEM MEASUREMENT ACCURACY TO ± ONE SCIM (ALL SITES)
- ALIGNMENT PIN PROTECTION & JOINT DISASSEMBLY VERIFICATION PROCEDURES SHOULD BE IMPROVED (ALL SITES)

TABLE 6

STS-55 ON-PAD ABORT TEAM
LONG TERM RECOMMENDATIONS

ASSESS REDESIGN OPTIONS

- DESENSITIZE SYSTEM FOR LEAKAGE TO DELETE REDLINE (e.g. ORIFICE RELOCATION)
- REDUCE SUSCEPTIBILITY FOR REDLINE SHUTDOWN
  - HARDWARE & SOFTWARE CHANGES (e.g. INSTALL ALL - 151 CVs, FILTERS, SERIES CHECK VALVES, RAISE REDLINE)
- ELIMINATE NEED FOR ALIGNMENT PINS IN <u>ANY SYSTEM</u> SUSCEPTIBLE TO CONTAMINATION

INTEGRATION

- REEVALUATE PAD-ABORT CLUSTER SHUTDOWN LOGIC TO PRECLUDE OPOV CHANGEOUTS
- REEVALUATE OTHER SSME REDLINE SETTINGS WITH CONSERVATIVE MARGINS FOR POTENTIAL ADJUSTMENTS TO PRECLUDE UNNECESSARY ABORTS OR PREMATURE SHUTDOWNS

TABLE 7

STS-55 ON-PAD ABORT TEAM
OTHER OBSERVATIONS

NDT

- EVALUATE BORESCOPE, COMPUTED TOMOGRAPHY OR NEUTRON RADIOGRAPHY AS A MEANS FOR CONTAMINATION DETECTION IN THE FINAL BUILD PHASE

- USE OF NDT METHODS IN THE BOATTAIL IS NOT RECOMMENDED

  - REMOVE AND REPLACE HARDWARE BASED ON LEAK CHECK RESULTS
  - MINIMIZE EQUIPMENT AND OPERATIONS IN THE BOATTAIL

TABLE 8

BACKFLOW PRESSURE MARGIN

	2.3 SEC	65% PL	100% PL
FUEL PREBURNER			
NO CV LEAKAGE	700 PSI	475 PSI	1250 PSI
FPB DOME CV FULL OPEN	700 PSI	475 PSI	1250 PSI
OXIDIZER PREBURNER			
NO CV LEAKAGE	578 PSI	400 PSI	1026 PSI
OPB ASI CV FULL OPEN	211 PSI	159 PSI	550 PSI
OPB DOME CV FULL OPEN	578 PSI	400 PSI	1026 PSI
MAIN OX DOME			
NO CV LEAKAGE	49 PSI	405 PSI	917 PSI
MAIN OX DOME CV FULL OPEN	49 PSI	405 PSI	917 PSI

TABLE 9

CHECK VALVE COMBINED LEAKAGE DATABASE

(SAME ENGINE/CHECK VALVE SET)

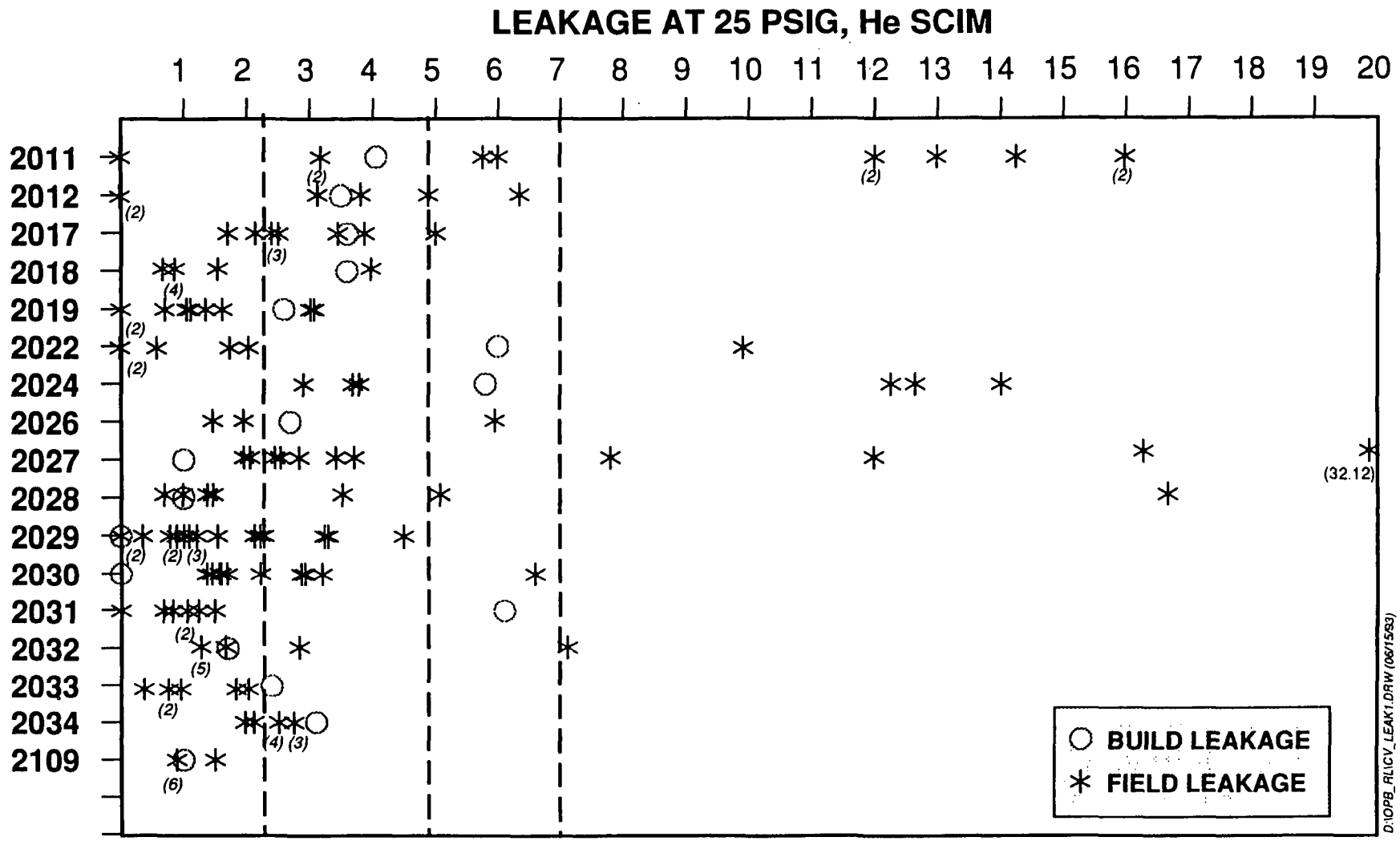

Rockwell International
Rocketdyne Division

AVE
2.2

2 SIGMA
4.9

NEW COMBINED
LIMIT = 7.0

FIGURE 1

CHECK VALVE LEAKAGE

- **DATA GENERATED FOR VARIOUS PURGE PRESSURE MEASUREMENT LEVELS**
  - AT START +2.3 SEC FOR NORMAL START
  - USES TEST BED DATA FOR UPSTREAM PRESSURE AND TEMPERATURE
  - DETAILED TRANSIENT HEAT TRANSFER MODEL OF CHECK VALVE SYSTEM

EQUIVALENT 25 PSIG HELIUM FLOW CHECK

	CALCULATED FLIGHT PURGE PRESSURE					
	50 PSIA		100 PSIA		300 PSIA	
	STROKE	SCIM	STROKE	SCIM	STROKE	SCIM
FPB DOME PR	.000079	3.2	.000122	12	.000284	149
FPB ASI PR	.000172	33	.000278	140	.000793	2190
OPB ASI PR	.000250	102	.000433	506	.00305	14000
OPB DOME PR	.000203	54	.000339	243	.00120	4560
MCC DOME PR	.000238	88	.000392	376	.00109	3930

FIGURE 2

FPB ASI LOX CHECK VALVE FAILURE

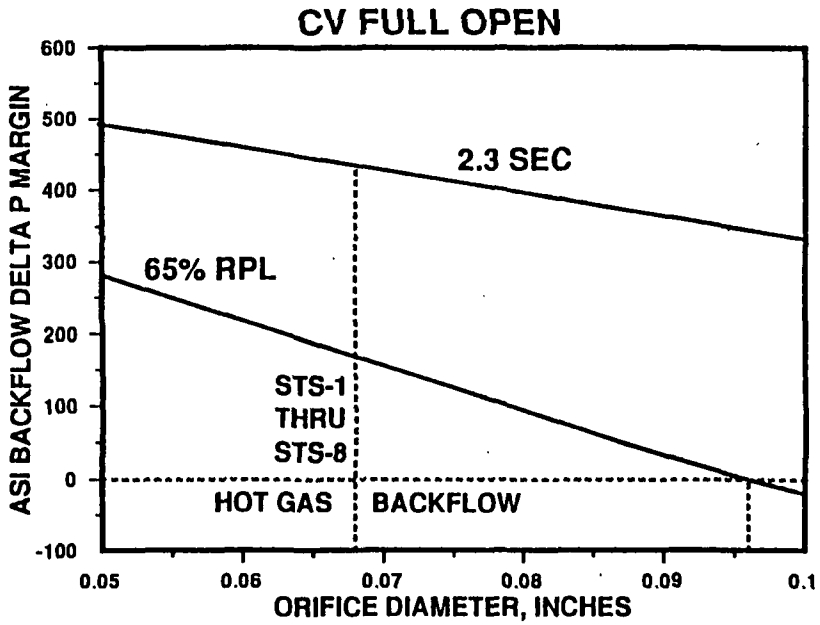

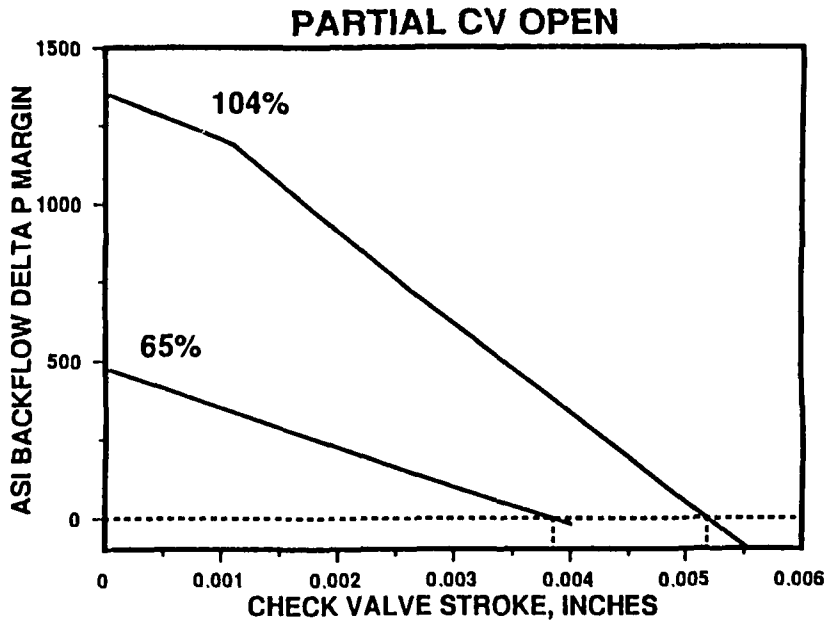

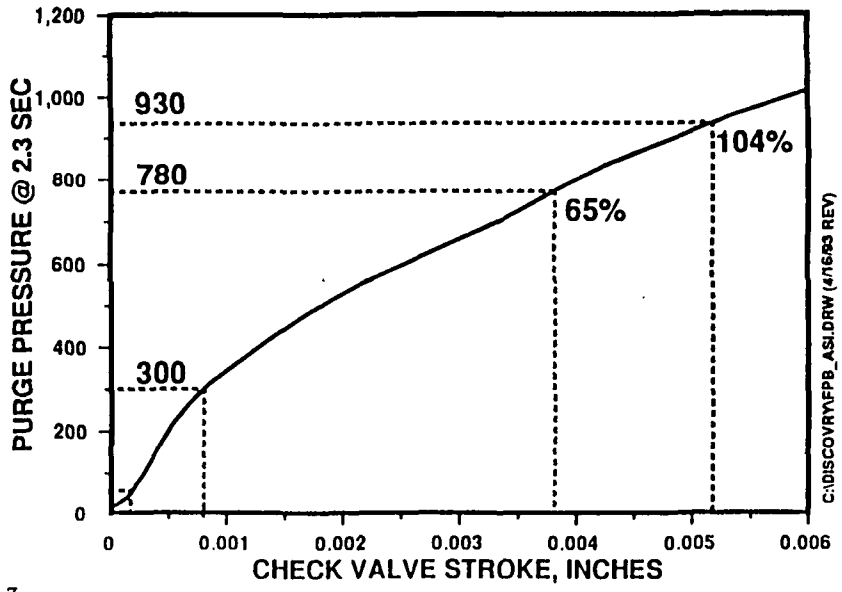

FIGURE 3

MEASURED PURGE PRESSURE AT 2.3 SECONDS

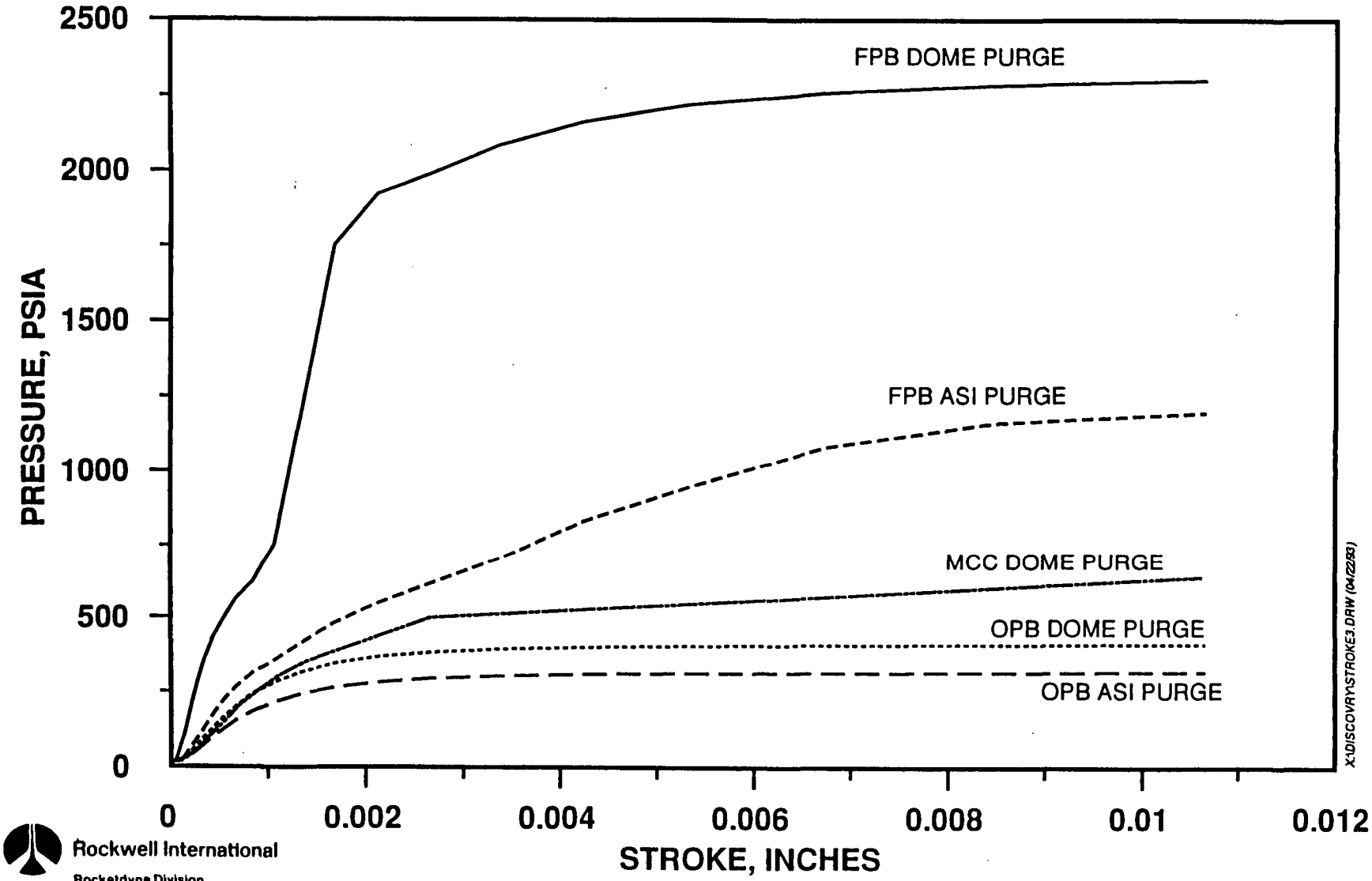

Rockwell International
Rocketdyne Division

FIGURE 4

Section 3.0

Failure Tree Description

FAILURE TREE DESCRIPTION

The failure tree for the Oxidizer Preburner Purge Pressure redline violation is shown in the Figure 1. The first branch of the tree distinguishes between two possible failure modes, 1) a real pressure increase causing the redline violation, and 2) a false redline violation, either an erroneous posting of the redline, or an erroneous pressure increase. The tree then identifies all components that could have caused the failure, and then further branches into possible failure modes of each component. Components were eliminated as failure candidates by post abort testing, data review, and/or system analysis.

The Oxidizer Preburner ASI purge check valve was identified as the failed component by special leak tests and also by data analysis. Discussion of the data analysis is contained in the STS-55 Abort Signature Correlation section of this report. Check valve teardown and inspection identified the failure mode as contamination on the sealing surface that was introduced into the check valve during the check valve fabrication process.

Components that could cause a false pressure indication are the controller, sensor, or harnesses. These failure paths were eliminated by data analysis of the pressure increase signature on both the Oxidizer Preburner (OPB) and Fuel Preburner (FPB) purge pressures. All characteristics of both traces appear real.

Components exonerated from causing the real pressure increase in the OPB and FPB purge pressures are the GN_2 Purge Supply Ground Support Equipment (GSE), SSME Solenoid Valves, Oxidizer Control Valves, and Pressure Actuated Valves.

The GN_2 Supply GSE is made up of solenoid valves, regulators, and hand valves. If the GN_2 supply were activated, the purge pressure would cause the OPB Purge pressure redline violation. It was eliminated by data review that showed the Supply Panel outlet pressure indicated ambient at the time of the failure. Also, the other engines showed no evidence of increased GN_2 supply pressure.

SSME solenoid valves that could cause an increase in OPB purge pressure are the Preburner Shutdown Purge, Emergency Shutdown, and POGO Precharge Solenoids. If the Preburner Shutdown Purge Solenoid were energized, helium would fill the purge supply and cause a redline violation. The Emergency Shutdown Solenoid could cause an OPB pressure increase if leakage was great enough into the solenoid vent system, which in turn vents to the Oxidizer Component Drain causing back pressure to flow into the OPB purge system. Leakage of the Helium Precharge Solenoid could flow into the Helium Precharge Valve (HPV) "Backdoor Actuation" control port. Pressure in that line can cause actuation of Pressure Actuated Valves PAV4 and PAV5 allowing helium to flow into the Preburner Purge System. Review of controller solenoid monitors showed that no solenoid was incorrectly energized during the failure. Review of emergency shutdown pressure showed there was no leakage from the Emergency Shutdown Solenoid and review of the POGO Precharge pressure did not indicate there was activation of the

Helium Precharge Valve. Also PAV4 and PAV5 actuation by the HPV "Backdoor Actuation" port has a different signature than the OPB & FPB purge pressures exhibited.

The SSME Oxidizer Control Valves are the Main Oxidizer Valve, the Fuel Preburner Oxidizer Valve, and the Oxidizer Preburner Oxidizer Valve. Shaft seal leakage from these valves drains into the Oxidizer Component Drain. Choked flow in this line would cause an increase in the OPB purge pressure system. Post abort leak tests of the Oxidizer Control Valve shaft seals identified no anomalies with these valve shaft seals. Shaft seal leakage from these valves is included in the preburner purge check valve combined leak test.

The Pressure Actuated Valves that could cause this failure are PAV4, PAV5, and PAV6. PAV4 and PAV5 leakage would allow helium to pressurize the purge system causing the redline violation. If PAV6 was failed in the open position, leakage from the OPB and FPB check valves would be trapped and pressure would increase. The combined allowed leakage from the check valves could cause the OPB purge pressure redline violation. PAV4 and PAV5 were eliminated by data review which showed there was no pressure increase until Preburner Pressure increased. A helium leak past PAV4 or PAV5 would cause a steady pressure increase from the beginning of the Engine Start sequence. PAV6 was exonerated by review of the OPB and FPB purge pressures when the GN_2 supply pressure was terminated. The OPB and FPB pressures clearly show an increased decay rate when the GN_2 supply decreases to 85 PSIA. This is indicative of PAV6 opening when the control port pressure decreases below the required actuation pressure.

All possible causes of Oxidizer Preburner Purge pressure redline violation are identified on the failure tree. Post abort testing, data review, and/or system analysis identified the OPB ASI purge check valve as the failed component and exonerated all other components as the failure cause.

Based on the evidence compiled in the investigation and detailed application of fault tree logic the most probable failure scenario is summarized in Figure 2.

STS-55 ABORT FAILURE TREE

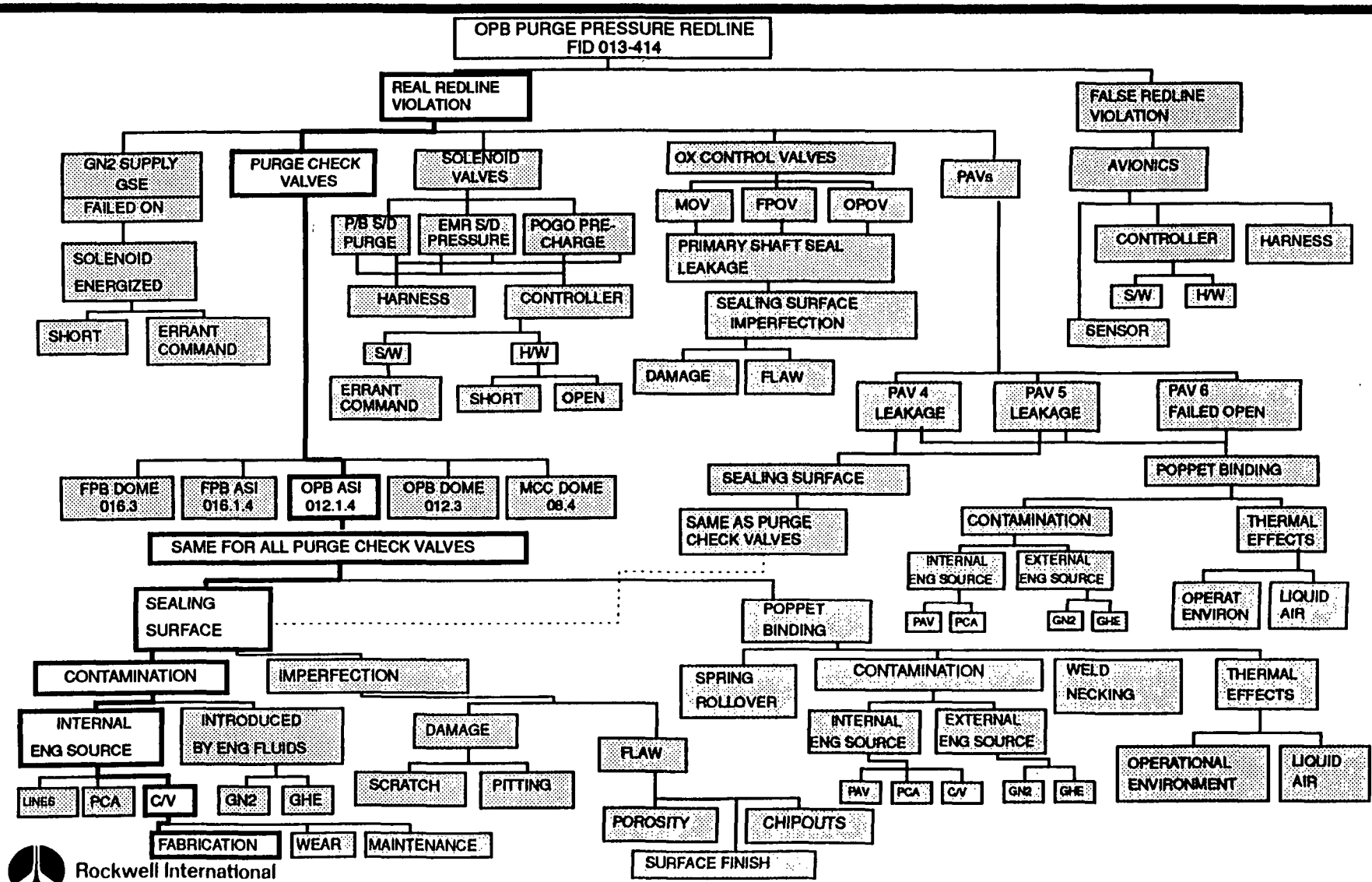

Rockwell International
Rocketdyne Division
57EXE36G1-AF

FIGURE 1

STS-55 PAD ABORT (ENGINE 2011)

FAILURE SCENARIO

EVENTS	DATA
(1) VALVE BUILD INTRODUCED CONTAMINATION	• FOUND AT DISASSY - LARGE BLACK PARTICLE WOULD NOT PASS THRU • IDENTIFIED TO BUILD TOOL (TWO PRIOR CASES DIS-COVERED IN BUILD) • CONSISTENT COMBINED LEAK CHECKS ABOVE DATA BASE • UPSTREAM ENGINE SYSTEM CLEAN
(2) CONTAMINANT MIGRATES TO D/S POPPET CAVITY & CAN BE ORIENTED TO NOT CAUSE LEAK & BE TRAPPED	• 12 HOT-FIRES & 4 SUCCESSFUL FLIGHTS • ZERO LEAKAGE IN 1st ISOLATION CHECK • SIMILAR CASE AT SSC (NOT SAME CONTAMINANT)
(3) A PORTION OF THE CONTAMINANT TRAPPED IN THE SEAT CAUSES LEAKAGE	• PRESSURE DATA & ANALYSIS • VERIFIED IN LEAK CHECK (.0004 EQUIV STROKE)
(4) LEAKAGE HIGH ENOUGH TO CAUSE REDLINE VIOLATION & SAFE S/D	• MODEL ANALYSIS • MEASURED LEAKAGE • REDUNDANT SENSORS • PRIOR TEST HISTORY
(5) FRAGMENTS (<.010) IGNITE IN 02 ENVIRONMENT UPSTREAM OF SEAT	• MATERIAL IS NOT LOX COMPATIBLE • ADIABATIC HEATING AT SHUTDOWN SUFFICIENT TO REACH IGNITION TEMP • CARBON RESIDUE FOUND
(6) INSUFFICIENT ENERGY RELEASED TO RAISE METAL TO > 2500° F	• NO EVIDENCE OF HEATING IN HARDWARE

FIGURE 2

Section 4.0

Failure Signature Correlation

FAILURE SIGNATURE CORRELATION

In analyzing the data that resulted in the abort, it is important to note that both the OPB and FPB purge pressure sensors showed an increase and the increase in pressures followed engine thrust build-up. This data is characteristic of purge check valve reverse leakage. Table 1 provides a list of previous purge check valve reverse leakage experience. The fact that this is a clear cut signature enabled the team to concentrate on this branch of the fault tree (Figure 1) (although the other branches were analyzed to insure completeness).

The next step was to determine which of the five check valves caused the abort. Figure 2 provides a comparison of the STS-55 abort with previous purge check valve failures. In analyzing the data from Engine 2011, it was noted that the FPB purge pressure lagged the OPB purge pressure and the FPB purge pressure was approximately 80% of the OPB purge pressure. An orifice located upstream of PAV 5 in the PCA (Figure 3) creates a lag between the pressure being registered on the two sensors. If the FPB dome purge check valve (016.3) had leaked, the OPB purge pressure would have lagged the FPB purge pressure (see Figure 2). The fact that the opposite occurred eliminates the FPB dome purge check valve (016.3) as the cause of the abort.

The MCC dome purge check valve (08.4) was then analyzed. Figure 2 shows three prior cases of MCC dome purge check valve leakage. Engine 2011 data does not match the MCC dome purge check valve (08.4) leakage characteristics and therefore eliminates this valve as the cause of the abort.

The remaining three check valves (FPB ASI purge (016.1.4), OPB ASI purge (012.1.4) and OPB dome purge (012.3)) all produce results similar to those seen on Engine 2011: The FPB purge pressure lags the OPB purge pressure and the system configuration is such that the FPB purge pressure would be approximately 80% of the OPB purge pressure. Figure 2 shows data from FPB ASI and OPB ASI purge check valve failures.

Further analysis based on modeling, previous check valve failures and data from TTB Engine 3001, revealed the following: leakage of the FPB ASI purge check valve (016.1.4) results in a OPB purge pressure which follows the average of PBP discharge pressure and FPB Pc. OPB ASI purge check valve (012.1.4) leakage results in a OPB purge pressure which follows the average of PBP discharge pressure and OPB Pc. Finally, the OPB purge pressure would follow PBP discharge pressure in the case of OPB dome purge check valve (012.3) leakage.

Analysis of Engine 2011 data from the STS-55 abort shows that OPB purge pressure lags PBP discharge pressure. This lack of correlation between OPB purge pressure and PBP discharge pressure exonerates the FPB dome purge check valve (012.3) as the cause of the abort. Comparison of OPB purge pressure and the average of PBP discharge pressure and FPB Pc also shows a lack of correlation (Figure 4), eliminating FPB ASI purge check valve (012.1.4) leakage as the cause of the abort. In the flight sensor

configuration, OPB Pc is not recorded and therefore a direct comparison to the average of PBP discharge pressure and OPB Pc could not be made. However, a comparison of Engine 2011 OPB and FPB purge pressure data and data from a prior OPB ASI purge check valve failure (Figure 5) shows a good correlation.

The lack of correlation with other purge check valve failure signatures and the good correlation to the OPB ASI purge check valve (012.1.4) failure data led to the conclusion on that the OPB ASI purge check valve (012.1.4) caused the abort.

TABLE 1. CHECK VALVE LEAKAGE OBSERVED DURING HOTFIRE TESTING

DURING HOTFIRE TESTING	TEST(S) ON WHICH FAILURES OCCUR	UCR #	FPB PURGE PRESSURE *	POSTTEST LEAKAGE	CAUSE OF FAILURE
FPB DOME PURGE CHECK VALVE O16.3	901–007	A002747	60 PSIA	UNKNOWN	A PIECE OF PCA FILTER SCREEN WAS FOUND UNDER THE POPPET SEAT.
	902–330	A013325	>1656 PSIA	> 1000 SCIM	KEL–F PARTICLE WERE FOUND IN THE CHECK VALVE. PARTICLE WERE FROM THE MCC PURGE PAV #6.
			OPB PURGE PRESSURE *		
FPB ASI PURGE CHECK VALVE O16.1.4	901–417	A012539	229 PSIA	> 10,000 SCIM	KEL–F PARTICLE WERE FOUND IN THE CHECK VALVE. PARTICLE WERE FROM THE MCC PURGE PAV #6.
OPB ASI PURGE CHECK VALVE O12.1.4	902–331	A013333	306 PSIA	0 SCIM	POLYKEN TAPE CONTAMINATION WAS FOUND IN THE CHECK VALVE.
OPB DOME PURGE CHECK VALVE O12.3	902–468	A022883	30 PSIA	680 SCIM	TRANSIENT CONTAMINATION IS THE PROBABLE CAUSE. NO CONTAMINATION FOUND IN CHECK VALVE. LEAK TESTS AT CANOGA SHOWED NO LEAK.
MCC LOX DOME CHECK VALVE O8.4	902–253	A017597	429 PSIA	44 SCIM	DEPRESSION FOUND ON VALVE BODY SEAT. SOURCE OF DEPRESSION (CONTAMINATE) WAS NOT FOUND.
	904–099 904–100	A030332	185 PSIA 167 PSIA	7500 SCIM	AN INCO 718 PARTICLE 0.054 x 0.040 x 0.026 WAS FOUND IN THE CHECK VALVE.

* MAXIMUM PRESSURE BETWEEN 0 AND 2.28 SECONDS

STS-55 ABORT FAILURE TREE

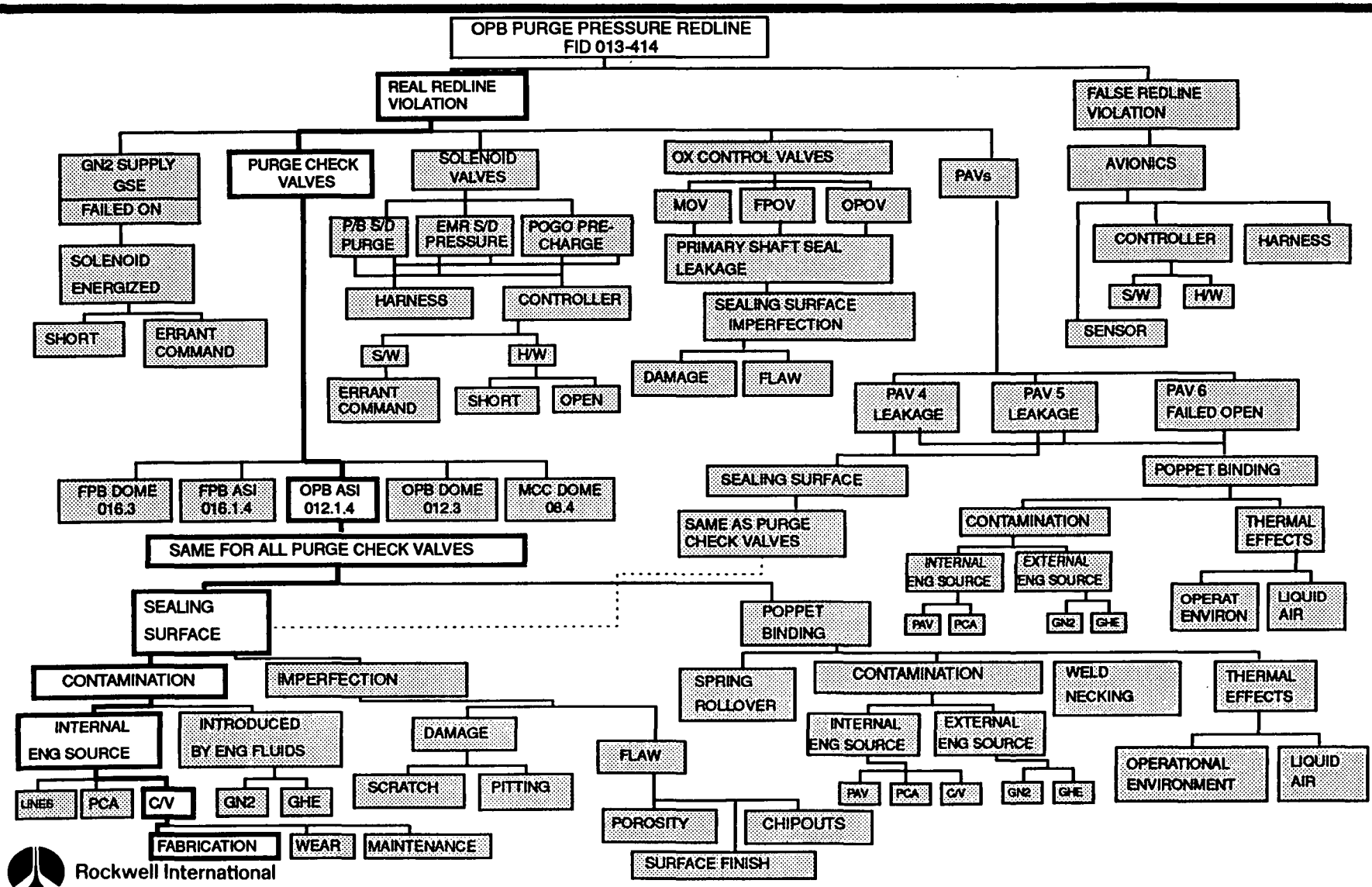

Rockwell International
Rocketdyne Division
57EXE\36G1-AF

FIGURE 1

Purge Check Valve Failures

STS-55 ME-3 ABORT

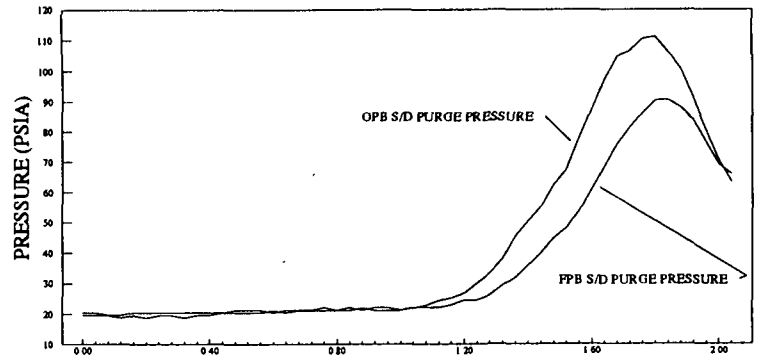

FPB ASI PURGE CHECK VALVE (O16.1.4) FAILURE

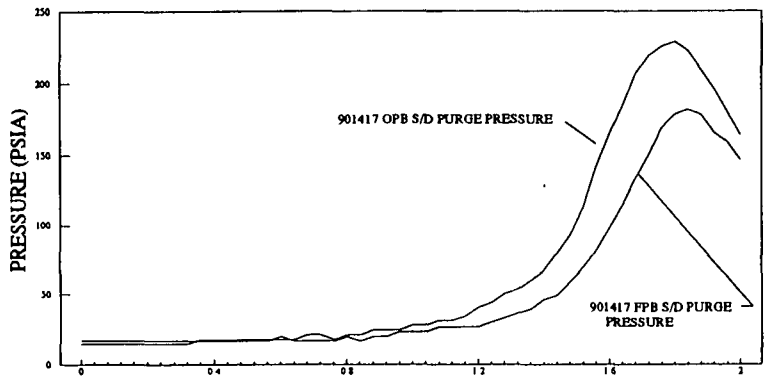

OPB ASI PURGE CHECK VALVE (O12.1.4) FAILURE

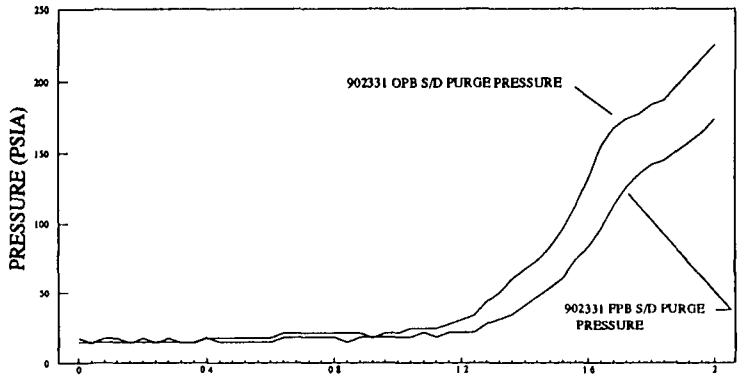

FPB PURGE CHECK VALVE (O16.3) FAILURE

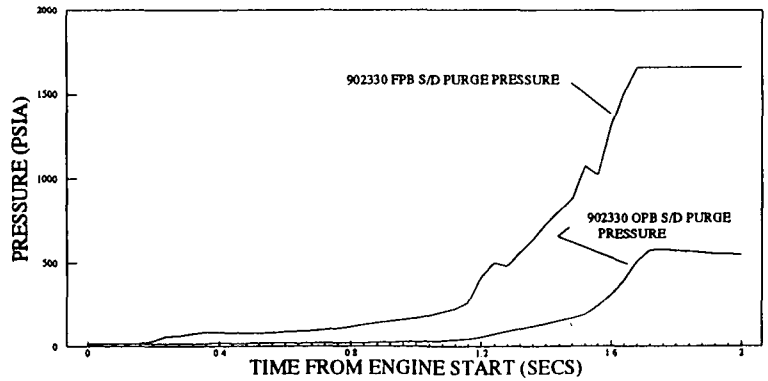

MCC LOX DOME CHECK VALVE (O8.4) FAILURE

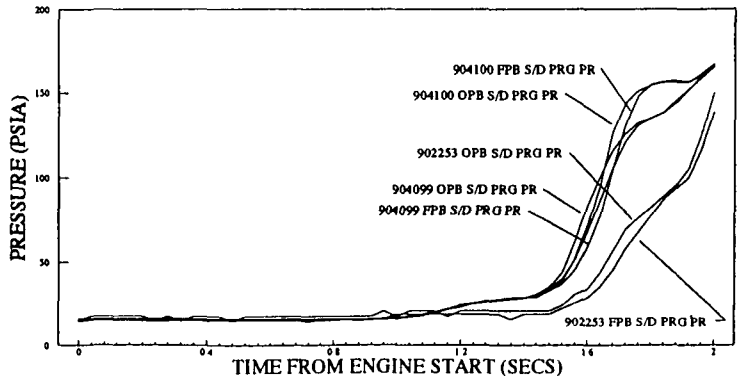

FIGURE 2

PURGE CHECK VALVE SYSTEM

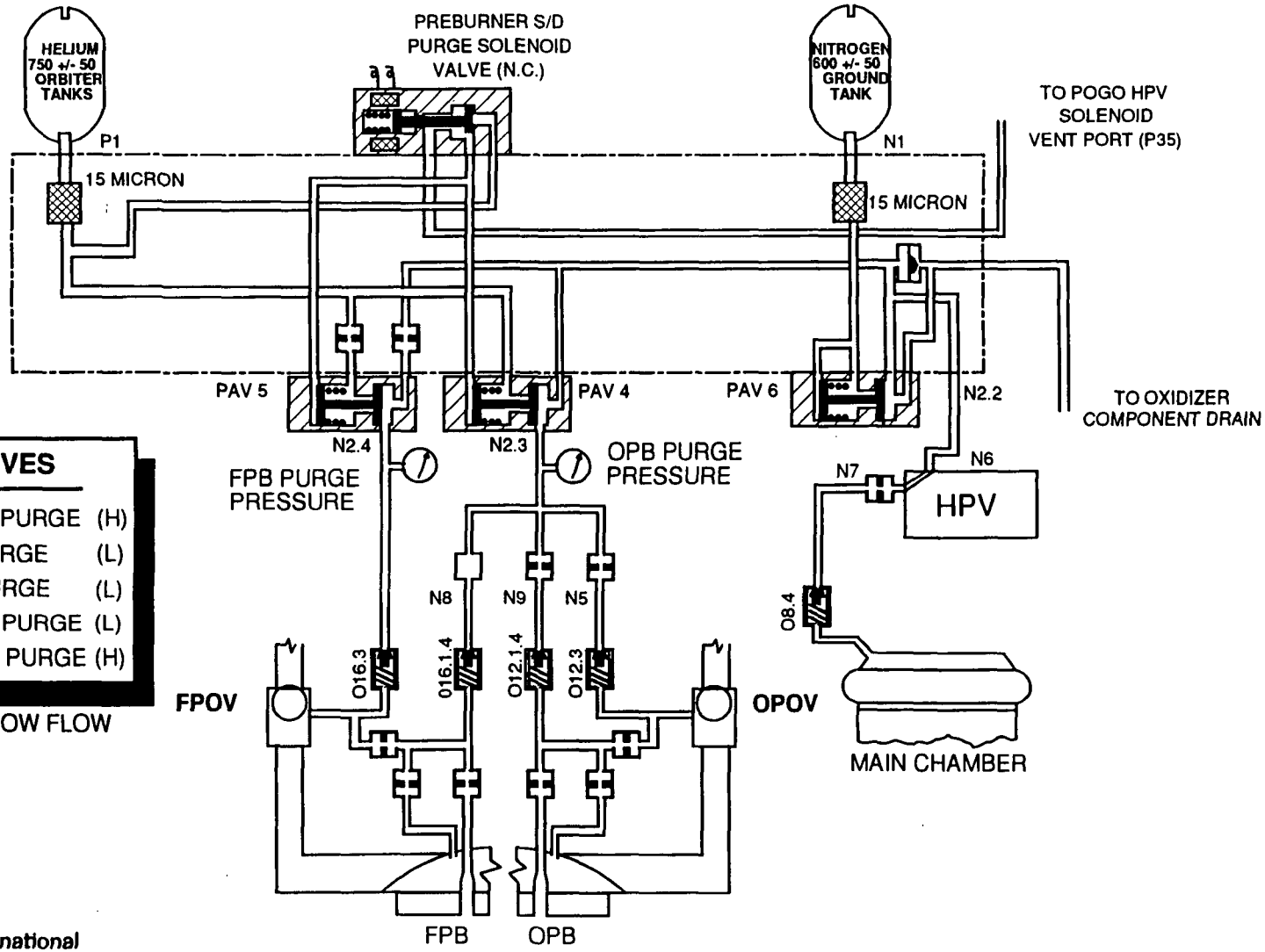

CHECK VALVES		
O16.3	FPB DOME PURGE	(H)
O16.1.4	FPB ASI PURGE	(L)
O12.1.4	OPB ASI PURGE	(L)
O12.3	OPB DOME PURGE	(L)
O8.4	MCC DOME PURGE	(H)

(H) HIGH FLOW (L) LOW FLOW

PURGSYS.DRW

Rockwell International
Rocketdyne Division

FIGURE 3

STS-55 ABORT AND FPB ASI CHECK VALVE FAILURE COMPARISON

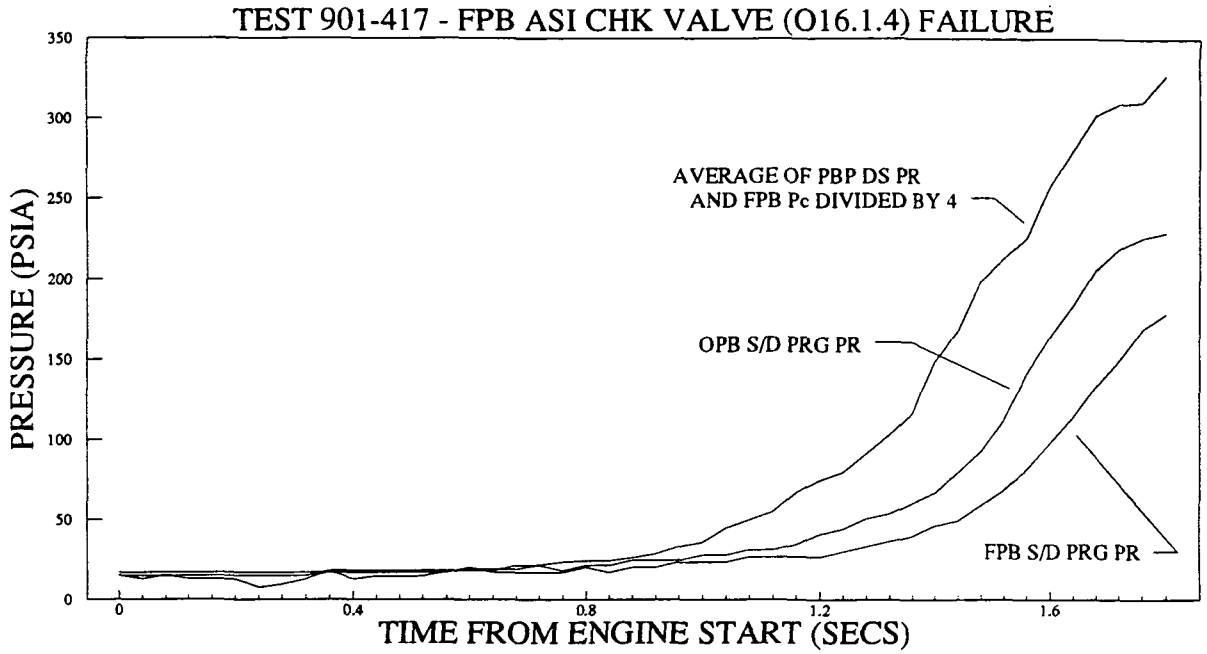

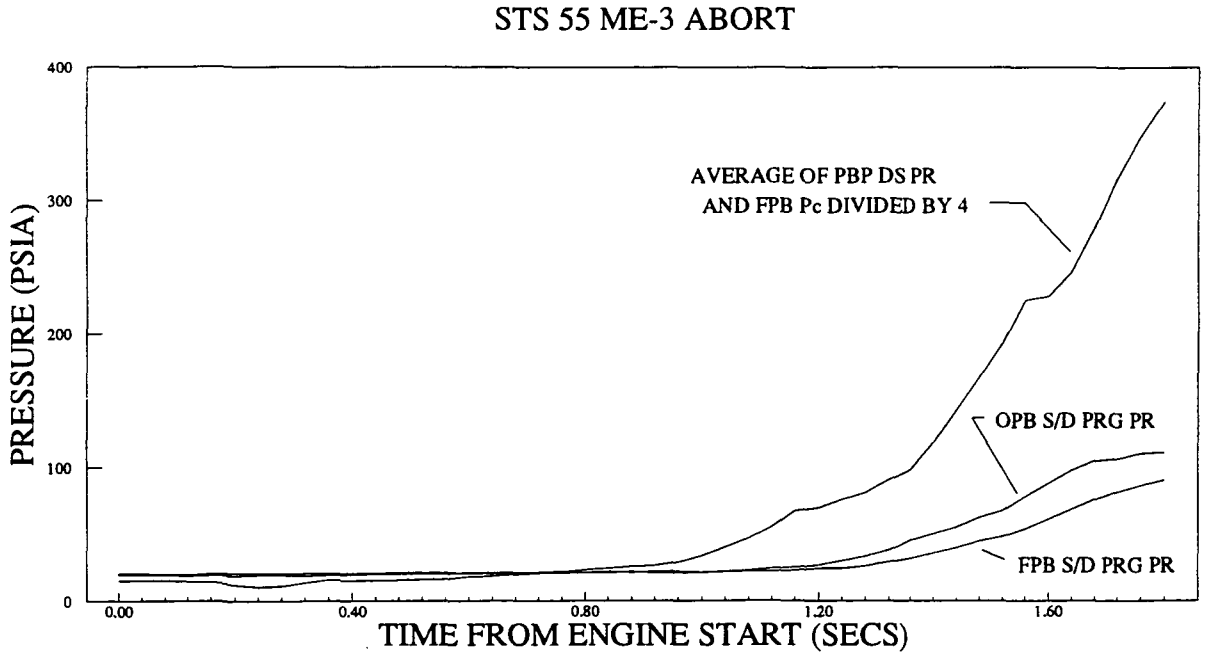

FIGURE 4

STS-55 ABORT AND OPB ASI CHECK VALVE FAILURE COMPARISON

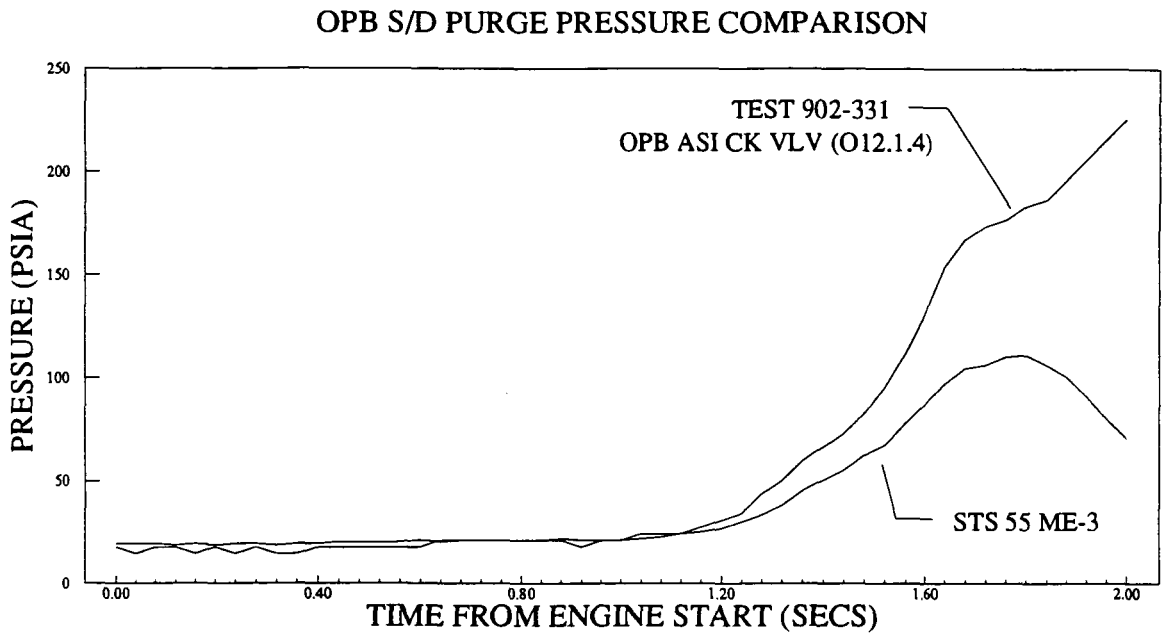

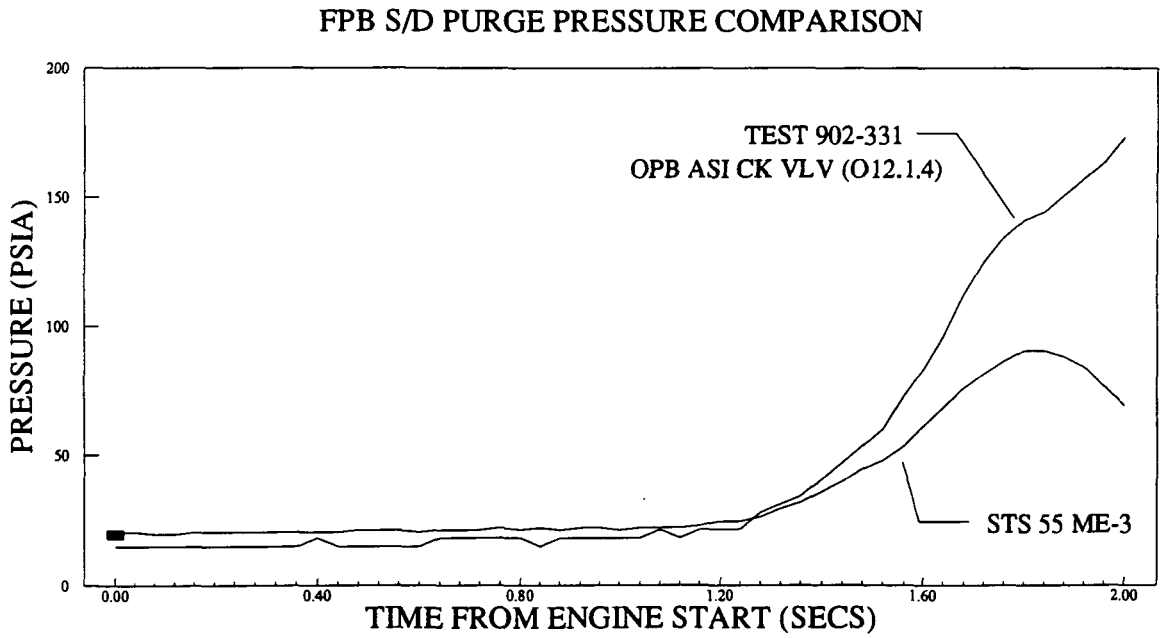

FIGURE 5

Section 5.0

OPB ASI Purge Check Valve Failure Analysis

OPB ASI PURGE CHECK VALVE FAILURE ANALYSIS

SUMMARY

A combined leak check was performed on Engine 2011 to verify the check valve leakage. The leakage measured was within acceptable limits (Table 1). After a five minute GN_2 purge, the combined leakage was 790 scim. Isolation tests were run. The OPB ASI Purge Check Valve leaked 468 scim and 581 scim at 11 and 25 psig respectively.

The check valve was visually examined at Canoga. One non-metallic particle was observed in the poppet/body annulus. Leakage measured at Canoga was 240 and 460 scim at 10 and 25 psig. Radiographic inspection did not locate any contamination or a poppet/seat gap. The two welds were machined to disassemble the valve. Contaminants found were analyzed by Materials, Engineering & Technology (ME&T). The largest particle found measured .146 X .046 X .018 inches (Figure 1). The material was nitrile rubber. The contamination apparently occurred during valve build in 1985. Evidence indicated a piece of O-ring was severed as a manufacturing fixture was installed for final assembly cleaning. A similar situation occurred in 1991 that resulted in a modification to the fixture and changes to its assembly procedures.

In July 1991 two check valves in build were similarly found contaminated with nitrile O-ring material. One was detected by an in-process leak check and one by visual inspection. At that time the contamination source was traced to the flushing fixture and several actions were put in place:

1) The planning was changed to provide clear installation procedures.

2) The fixture was changed to reduce susceptibility to O-ring damage.

3) The operation was brought into the valve assembly room to bring under the control of experienced valve technicians.

4) Requirements for inspection of the O-ring were added to the planning.

At the time the generic impact of the two discrepancies was evaluated at the valve fabrication team level. No UCR was written and at the time policy was vague as to whether one should be written. The valve fabrication team assessed the problem to be only an issue with the two valves in build on the bases of the following:

1) No prior evidence of similar contamination in any other build.

2) No prior evidence of similar contamination in any failure in-house or out-of-house.

3) The condition was easily detected during build.

4) Fluid leak check would detect problems with delivered valves.

5) Lox compatibility was not an issue since there was no contamination issue.

The poppet and body were reassembled using manufacturing fixtures (without welding). Leak tests were run from 10 psig to 5000 psig. The maximum leakage was .62 scim at 100 psig. Review of check valve FAR'S for leakage caused by contamination, showed twenty-nine check-valves contained particles large enough to analyze. All contained materials not used in the check valves, and no other cases of rubber O-ring material were found.

Test & Teardown

OPB ASI Purge Line Assembly P/N R0010828-031, S/N 4925685
Purge Check Valve Assembly P/N RS008059-141, S/N 4873034

The valve was received from KSC with no evidence of physical damage. The covers were removed and the assembly was visually inspected for contamination. One piece of contamination was observed between the poppet head outside diameter and the body. The contaminant was white and nonmetallic.

The line assembly was installed in the manufacturing test console per Figure 2. A millipore filter was installed in the discharge line to collect any contaminants dislodged during the test. The valve was leak tested at 10 and 25 psig inlet pressure to duplicate the KSC tests. Leakage was measured with a ball type flowmeter. The test fluid was ambient temperature helium.

Pressure (psig)	Leakage (scim)	KSC Data (scim)	New Valve MFG. Allowable (scim)
11	240	468	10
25	460	581	10

Because further testing could cause critically located contaminants to be lost, leakage tests were not conducted at higher pressure levels. The filter had no contamination.

The valve was separated from the line with a chipless cutter. The valve was held with the inlet down and a suction was maintained around the cutting area with a vacuum cleaner. After separation, the inlet was lightly deburred to remove loose burrs while maintaining the suction. The outside of the valve was hand wiped to remove any external contamination.

Based on the KSC isolation leak test data, the gap between the poppet and seat was calculated to provide information of the approximate flow path. Channel flow was

selected for the analysis, because the leakage flow indicated that the height of the leak path would be small compared to the length (width of seat). For 468 scim at 11 psig the calculated gap was .00057 inches. For 581 scim at 25 psig the calculated gap was .00040 inches. The change in gap suggested that the trapped contaminant was probably a soft material which compressed under the increased load.

The inlet and outlet of the valve were protected with closures. The valve was inspected by radiographic methods to determine if contamination could be detected and if the leakage gap would be visible. The results were negative. The inspection did show that the end coil of the spring slightly overlapped the adjacent coil at the retainer end.

Because the check valve is a welded assembly, it can only be disassembled by machining the welds (Figure 3). The inlet and outlet were protected to minimize the possibility of contamination. The machining was done on a lathe. No cutting oil was used. Weld number two was machined until is was almost through. The separation was accomplished by tapping lightly with a mallet. The retainer was removed by an axial cut to remove weld number one. The poppet was prevented from rotating by a bolt loaded from the outlet fixture into the poppet head. The spring was restrained with LOX tape to hold the parts when the weld was cut through.

The poppet and body were set on a clean piece of aclar. The parts were separated by lifting the body up off the poppet. The largest contaminant particle was found on the poppet outboard of the seat. The particle measured .146 X .046 X .018 inches (Figure 1) and was identified by ME&T as nitrile rubber, Table II (Ref. 1, Table II, IDCR 987174). The shape and material identified the source of the particle as a piece of O-ring from manufacturing tooling (Figure 4). The tooling is used during the fine clean of the check valve assembly. The installation procedure prior to 1991 was to assemble the fixture as shown in Figure 4 with the screws finger tight. The check valve was then inserted from the plate end by pushing the check valve cap tube through the O-ring into the fixture body. The sharp edge of the cap tube could nibble the O-ring as it passed through and the flushing operation would push the particles into the valve. These conditions were established when evaluating checkvalves contamination found in 1991. No other instances of O-ring nibbling were known prior to the 1991 instance. The test fixture was modified as shown in Figure 4. The assembly procedures were changed to put the plate and O-ring on the tube and then put the body on and install and tighten the screws. The O-ring is also now visually inspected both before installation and when the fixture is removed. These changes were incorporated in 1991 and the STS-55 failed the valve was built in 1985. Two cotton particles and three nylon particles were found on the aclar sheet. Because they were not observed on the body or poppet their location could not be identified and they could not be positively traced to the valve. A black residue at the bottom of the poppet bore was identified as carbon. The source of the residue is not known.

The poppet and body were reassembled using fixtures which are used to verify the poppet/body seal prior to welding. The maximum leakage was .623 scim at 100 psig test pressure. The test results are shown in Table III. The poppet was pushed open

manually and allowed to return with the spring load. There was no evidence of sticking or binding.

The "as received" leak tests verified the KSC leakage although the Canoga results were lower. The retest with clean parts verified the integrity of the poppet and body sealing surface. The manual valve actuation eliminated valve sticking as a possible cause. This leaves contamination as the most probable cause of leakage and the piece of nitrile rubber as the most probable suspect. The .018 thickness would allow the particle to pass through the seat lands but is too thick to have been trapped across the seal and only cause the amount of leakage measured. The particle was shaved off the inside of an O-ring by a cylindrical tube and was tapered at the ends. The rubber particle was long enough so that if it lay in a radial position one end would contact the outside of the body before the inner end cleared the seat (Figure 5 & 6).

An analysis was conducted to assess the possibility of valve leakage induced by the contaminant being wedged at the poppet O.D. to housing gap. Using the experimentally determined bulk modules data of Figure 7 and recognizing a 4 to 10 factor change with temperature two analyses were performed. One assuming the particle is trapped at the O.D. cavity, Figure 8 and one with a thin piece of nitrile under the seat, Figure 9. It was concluded from these results that a segment of the particle under the seat was most likely mechanism.

2011 LEAK CKECKS -25 PSIG

	COMBINED LEAK CHK	N2.4 016.3 FPB PURGE	N8 016.1.4 FPB ASI	N9 012.1.4 OPB ASI	N5 012.3 OPB PURGE	N7 08.4 MAIN DOME	TOTAL ISO'S
NEW DELIVERY	- -	0.9	2.4	0	0	0.8	4.1
1ST CHECK	14.5	0.9	0.5	0	5.9	2.7	10.0
CYCLE GN2 5 MINS - THROAT PLUG INSTALLED 50 MINUTES				580 @ 11 PSIG			
2ND CHECK @ 11 PSIG	790	0	0.4	468	2.2	0	471
@ 25 PSIG	–	0	0.7	581	0	3.2	3.9/585
OXID SHAFT SEALS	ZERO AT 25 PSIG						
CANOGA PARK	10 PSIG 25 PSIG			240 460	1.4 3.3		

55PAN31S1-F1

Rockwell International
Rocketdyne Division

TABLE 1

ME&T CONTAMINATION ANALYSES RESULTS - SSME 2011

RS008059-141 CHECK VALVE, S/N 4873034 (R0010828-031 CHECK VALVE LINE ASSY, S/N 4925685) IDCR 987174 (#1)			
PARTICLE LABEL	DIMENSIONS (INCHES)	IDENTIFICATION	COMMENTS
A	.045 X .011 X .002	NYLON W/ COTTON FIBER	AFTER CUT APART, GATHERED FROM ACLAR SURFACE FOLLOWING VALVE DISASSEMBLY
B	.104 X .015	COTTON	"
C	.041 X .038	COTTON	"
D	.045 X .025 X .005	NYLON	"
E	.077 X .040 X .004	NYLON	"
F	.022 X .010	NYLON	MOST LIKELY FROM PARTICLE E
BLACK RESIDUE	-	MAJOR CARBON	LOCATED UNDER POPPET CAP
BLACK PARTICLE	.146 X .046 X .018	NITRILE RUBBER	LOCATED ON POPPET FACE
POPPET SEAL SURFACE	-	INSUFFICIENT SAMPLE PRESENT FOR CONCLUSIVE RESULTS	SWAB SAMPLE TAKEN OF POPPET SEAL FACES
TAPE CONT.	.096 X .023	COTTON	LOCATED ON ADHESIVE SIDE OF TAPE USED AS MASK FOR VALVE INLET

TABLE 2

CHECK VALVE LEAKAGE

POPPET 7 BODY REASSEMBLED WITH TOOLING
TEST FLUID-HELIUM

PRESSURE (PSIG)	LEAKAGE (SCIM)
10	<.4*
25	<.4
100	.623
500	.501
1000	<.4
2000	<.4
5000	<.4

*.4 SCIM IS THE LOWEST MEASUREMENT POSSIBLE FOR THE FLOWMETER

TABLE 3

OPB ASI CHECK VALVE
BLACK PARTICLE CONTAMINATION

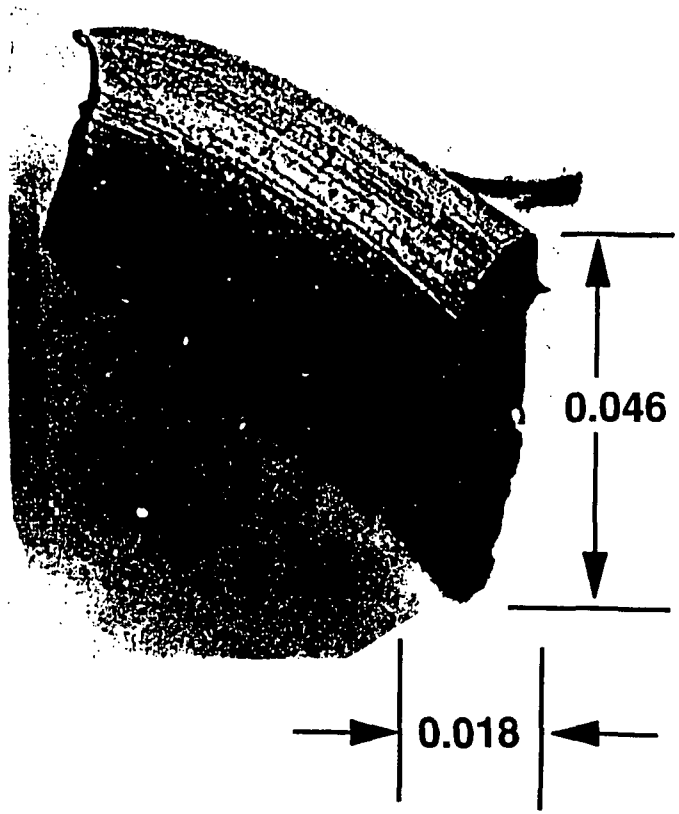

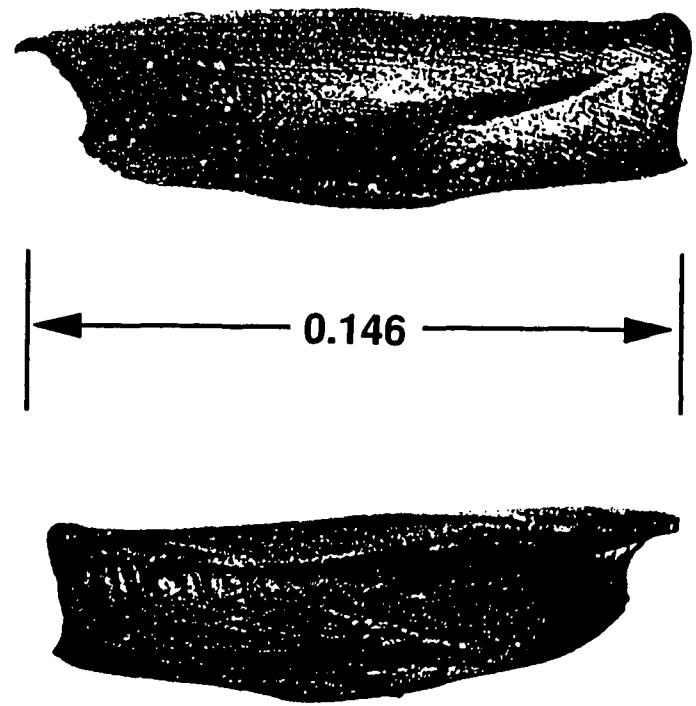

Rockwell International
Rocketdyne Division

FIGURE 1

SEAT LEAKAGE TEST SETUP

TYPICAL FOR USING STANDARD CONSOLE

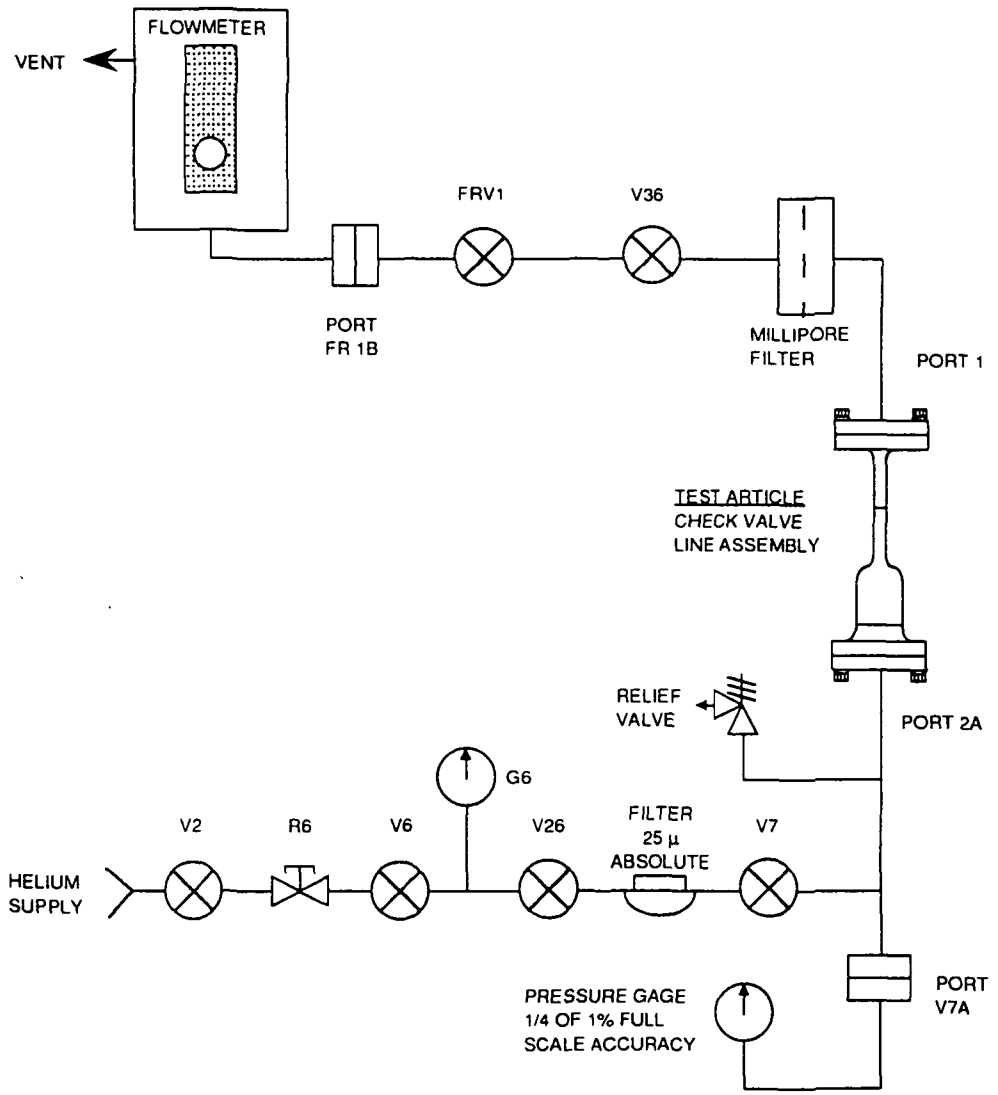

FIGURE 2

PURGE CHECK VALVE

CUTAWAY

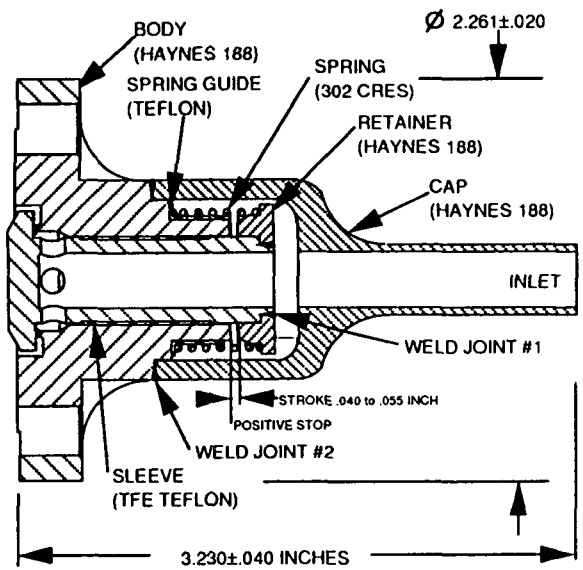

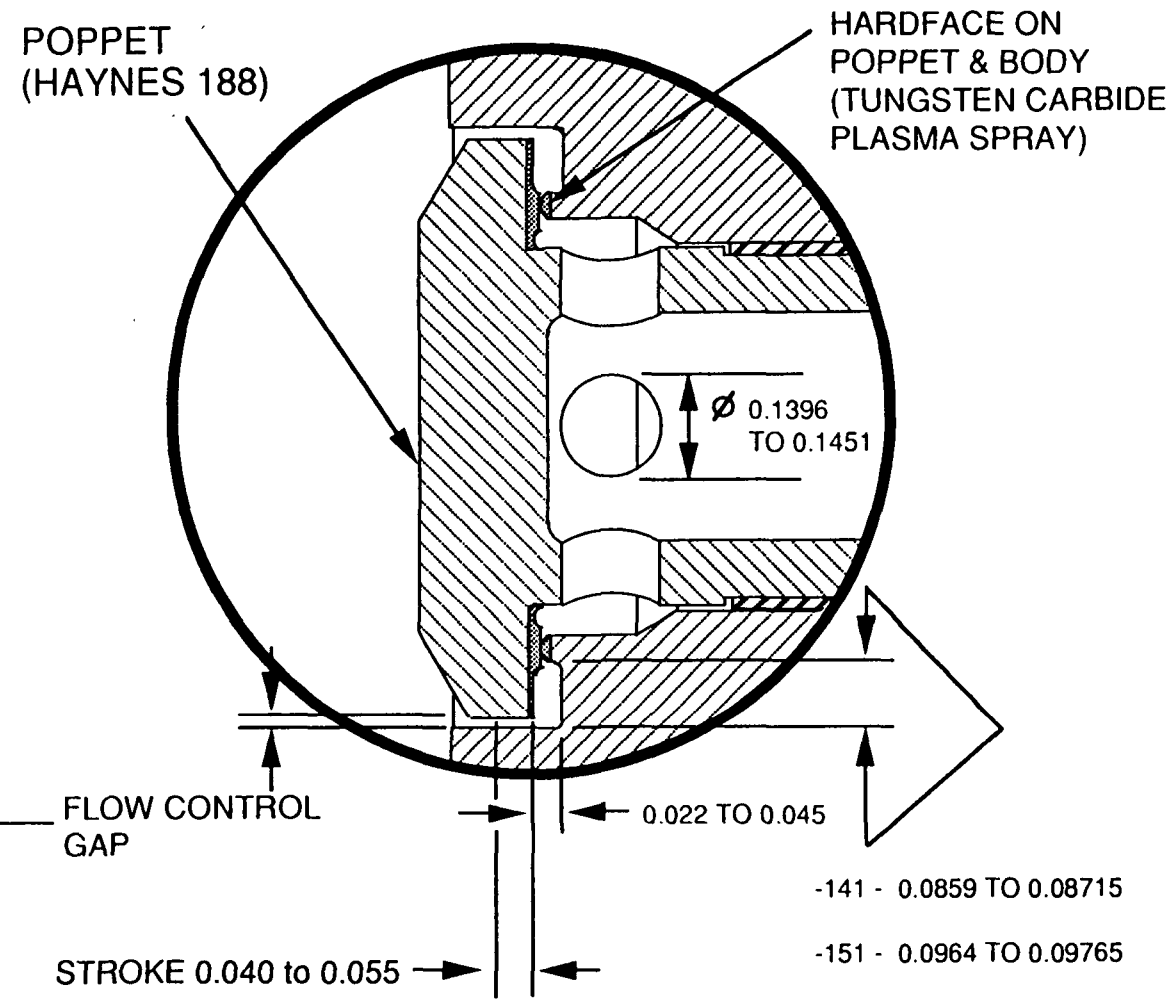

FLOW CONTROL GAP
-141 LOW FLOW 0.00915 TO 0.00965 -151 HIGH FLOW 0.01965 TO 0.02015

Rockwell International
Rocketdyne Division

FIGURE 3

CV-141-CUTAWAY - AVIONICS & CONTROLS 4/5/93

VALVE BUILD FLUSHING FIXTURE

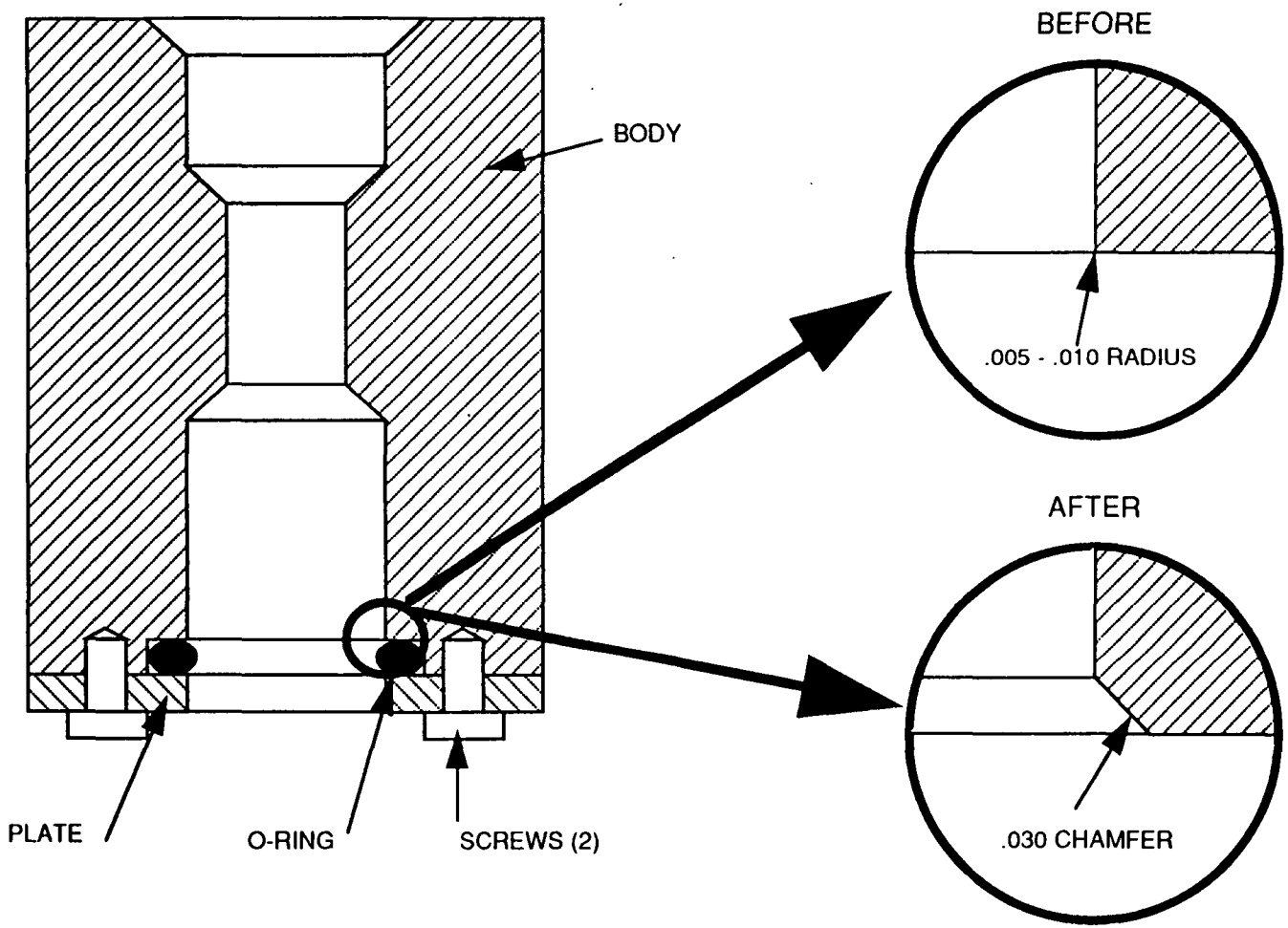

FIGURE 4

Rockwell International
Rocketdyne Division

FIXTURE with O-RING 3/30/93

STS-55 ABORT

CHECK VALVE CONTAMINANT POTENTIAL SCENARIO

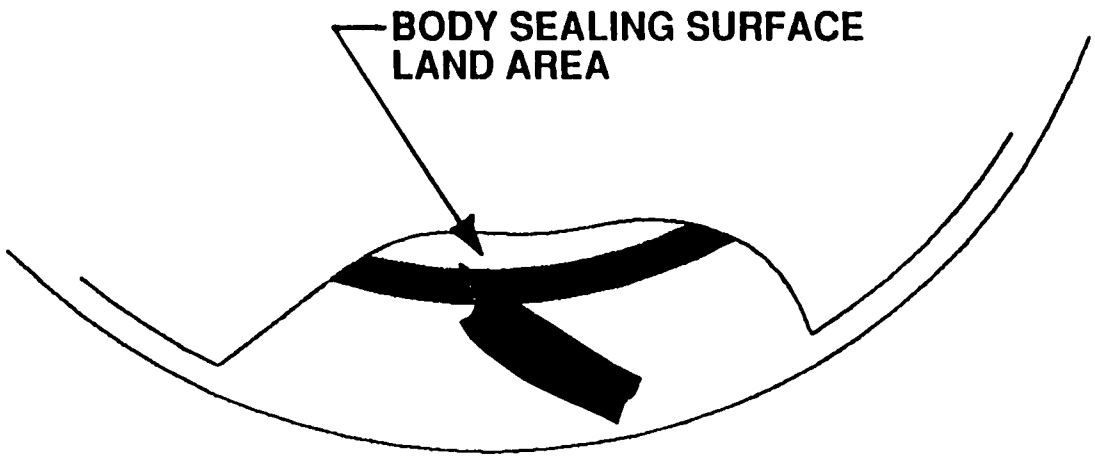

PROJECTION OF VIEW A

(PORTION OF POPPET REMOVED FOR ILLUSTRATION PURPOSES)

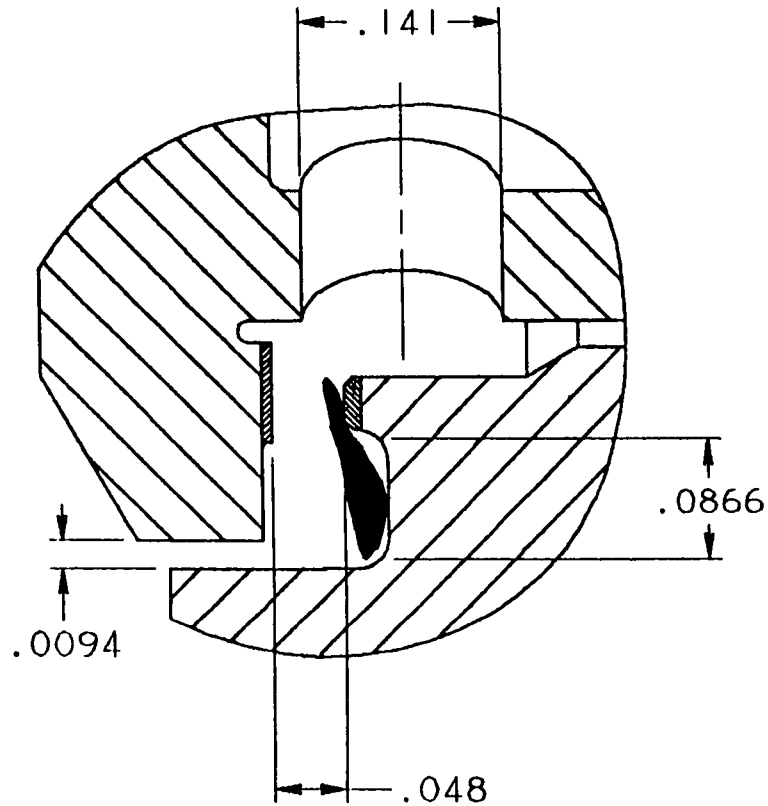

VIEW A

Rockwell International
Rocketdyne Division

FIGURE 5

AVIONICS & CONTROLS.E
7 APRIL 1993

CHECK VALVE CONTAMINANT POTENTIAL SCENARIO

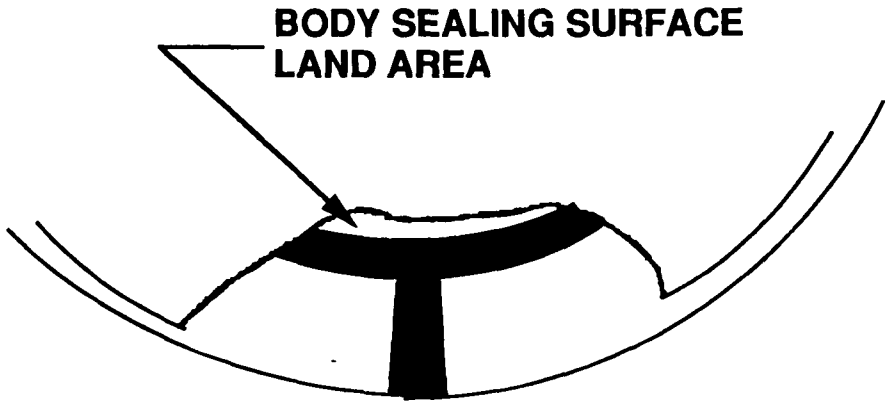

PROJECTION OF VIEW A

(PORTION OF POPPET REMOVED
FOR ILLUSTRATION PURPOSE)

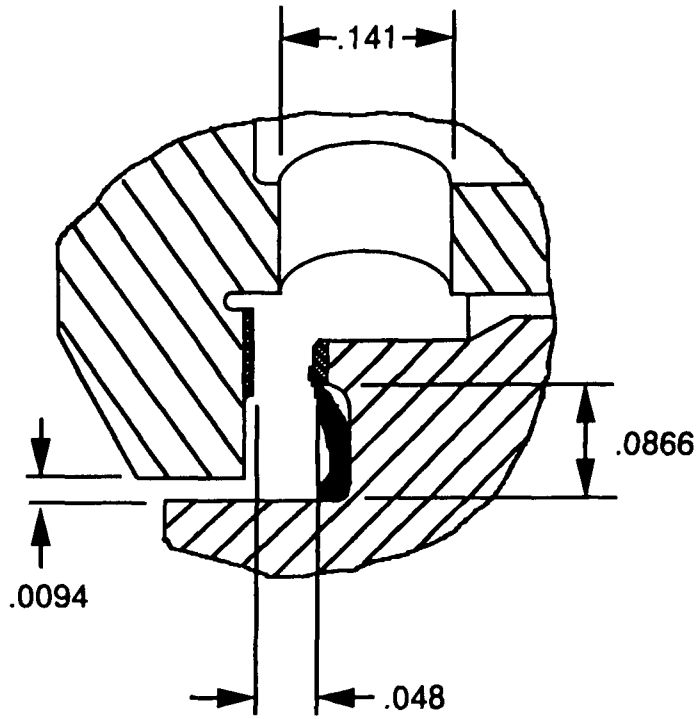

VIEW A

FIGURE 6

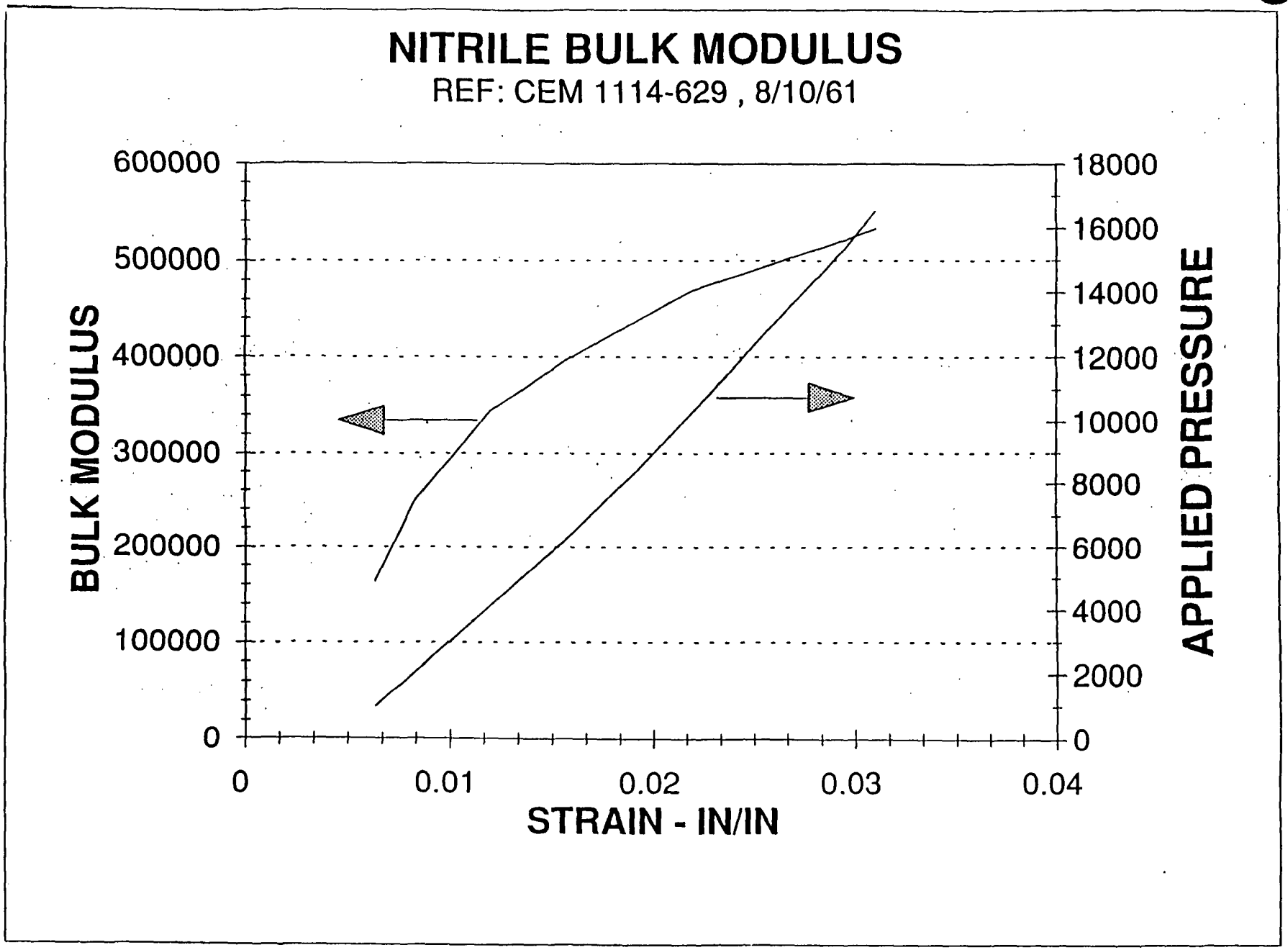
NITRILE BULK MODULUS
REF: CEM 1114-629 , 8/10/61
BULK MODULUS
600000
500000
400000
300000
200000
100000
0
APPLIED PRESSURE
18000
16000
14000
12000
10000
8000
6000
4000
2000
0
0
0.01
0.02
0.03
0.04
STRAIN - IN/IN

FIGURE 7

TRAPPED PARTICLE ANALYSIS

- ASSUME THE PARTICLE .0.0146 DIMENSION SPANS THE RADIAL CAVITY DIMENSION AND THE 0.046 DIMENSION IS ACROSS THE CAVITY.

  CAVITY CROSS SECTIONAL AREA = [.022 TO .045] [.0859 TO .08715] = .00189 TO .0039

  PARTICLE AREA = .046 *0.146 = 0.0067

  THE MAXIMUM PERCENT VOLUME REDUCTION IF COMPRESSED IN THE CAVITY RANGES FROM 41% TO 71%

  THE COMPRESSIVE STRESS IS [.41 TO .71] [150000 TO 600000] = 61,500 TO 426000
  CONTACT AREA = [.0859 TO 0.08715]* .015 = APPROXIMATELY 0.0013 INCHES SQUARED

  APPLIED FORCE = STRESS * AREA = 80 TO 553 LBS

  POPPET AREA IS APPROXIMATELY 0.25 INCHES SQUARED

  THEREFORE, THE PRESSURE REQUIRED TO DEFLECT THE RUBBER FRAGMENT IS:

  320 PSI TO 2200 PSI ASSUMING THAT THE FRAGMENT IS COMPLETELY CONFINED

  WITHOUT THE LATERAL RESTRAINT, THE MODULES IS APPROXIMATELY 1000 PSI AND THE SEATING PRESSURE IS REDUCED TO APPROXIMATELY: 2200*1/600 = 4 PSI

FIGURE 8

TRAPPED PARTICLE ANALYSIS

- CONSIDER A THIN PIECE OF NITRILE TRAPPED UNDER THE POPPET SEAT -
  - THIN SHEET ACTS AS IF TOTALLY RESTRAINED WHEN WIDTH OF CONTACT IS LARGE MULTIPLE (5 TO 10) OF THICKNESSES

<u>SENSITIVITY CALCULATION</u>

THICKNESS = 0.001 INCHES
POPPET SEAT WIDTH = APPROXIMATELY 0.027 TO 0.037 INCHES
SEATING PRESSURE = 100 PSI
MAXIMUM STRAIN = 50%

100*0.5 = [150,000 - 600,000][0.50](0.027 TO 0.037) * C]

REQUIRED CIRCUMFERENTIAL LENGTH (C) REQUIRED TO REACT PRESSURE IS

C =0.010 TO 0.025 INCHES

FIGURE 9

Section 6.0

Materials Analysis

MATERIALS ANALYSIS

INTRODUCTION

Contaminant particles associated with the OPB ASI Check Valve were discovered and retrieved for subsequent analysis both during the process of valve disassembly and from within the valve after disassembly was completed. Five white particles (identified as "A"-"E" in Table 1) were retrieved from the Aclar sheet covering the disassembly work bench after the disassembly was complete (The particle identified as "F" in Table 1 was subsequently determined to be a fragment from particle "E".). White contaminants were observed trapped between the poppet and the valve body before the valve was disassembled, but could not be retrieved before disassembly. It was not possible to correlate the particles found after disassembly with the observations made prior to disassembly because of the limited visibility of the contaminants prior to disassembly. One white particle was found on the adhesive side of the "LOX tape" used to seal off the valve inlet during the disassembly process. One large black particle was located on the upstream side of the valve poppet outboard of the valve sealing land after the valve was disassembled. Black residue consisting of two denser clusters (approximately .020" dia.) and a background of very fine dust was also observed on the upstream side of the valve poppet inside the hollow poppet stem. A thin transparent interference film of residue was noted on the poppet sealing surface of the valve body and was collected with a nylon swab for analysis. The contaminants, a brief description of their location relative to the check valve, their dimensions, and the analysis results, are summarized in Table 1.

The valve body, valve poppet, and spring were visually inspected with a binocular microscope. Particular attention was given to the hardfaced sealing surfaces on both the valve body and the valve poppet, and no discrepancies or damage were observed. Very light scuffing was observed on the surface of the spring coils where rubbing with the valve body had occurred, but this is considered typical. The Teflon sleeve on the poppet stem was inspected and no discrepancies were observed.

RESULTS

Black Contaminants

The large black particle from the upstream surface of the valve poppet is shown in Figures 1-3. The appearance and resiliency of this particle suggested that it might be a sliver sliced from the inner diameter of an O-ring. From the cross-section shown in Figure 3 it can be observed that the particle is a portion of a ring with a round cross section. The rounded surface is the original molded surface of the contaminant with ridges concentric with the center of the ring, and the flat surface was rough, indicative of having been sheared from a larger object. The particle was cut in half to permit destructive Fourier Transform Infrared (FTIR) Spectroscopic analysis and conserve the remainder for

subsequent analysis by other techniques. Approximately one-third of the remaining half was examined in the Scanning Electron Microscope (SEM) and an elemental chemical analysis was performed by x-ray Energy Dispersive Spectroscopy (EDS). The resulting EDS spectrum, Figure 4, clearly indicates the particle is not a Fluorocarbon elastomer, i.e. Viton, by the absence of a Fluorine x-ray peak, nor is it a Silicone indicated by the relative small Silicon x-ray peak. The presence of both Sulfur and Zinc, however, imply the particle is probably a rubber compound, and the similarity with an EDS spectrum subsequently obtained from an exemplar Nitrile O-ring, shown for comparison in Figure 5, should be noted. The contaminant EDS spectrum also contains small peaks for several metallic elements which would correspond to the fine metallic debris which was observed occasionally on the surface of the black contaminant during the SEM examination. The FTIR specimen was prepared by pulverizing the sample and dispersing it in a Potassium Bromide (KBR) pellet. The subsequent FTIR spectrum of the black contaminant matches the KBR spectrum prepared from the exemplar Nitrile O-ring, as shown in Figure 6. (The difficulty initially experienced in identifying the black contaminant was a consequence of using FTIR reference spectra prepared using the pyrolate technique for specimen preparation.) The identification of the black contaminant as Nitrile was subsequently confirmed by an independent FTIR analysis performed by an outside laboratory (Scanning Electron Analysis Laboratories, Inc.). The exemplar Nitrile O-ring used for comparison was a MS28775-012 O-ring which would be used in the check valve fine clean flushing fixture tool (T-5701004-303).

The original dimensions of the O-ring were estimated from the photographs of the fragment (Figures 1-3). Although the radius of curvature for the O-ring diameter is somewhat distorted, it was estimated that the original inside diameter was 7/16". The MS28775-012 O-ring has an inside diameter of 3/8". Likewise, the thickness of the O-ring was estimated at between 0.045" and 0.070" from the varying radius of curvature observed in Figure 3. The nominal thickness of a MS28775-012 O-ring is 0.070".

The two black residue particle clusters on the inside of the hollow poppet stem were too fragile to be removed intact for analysis. Insufficient material was removed to permit FTIR analysis, however sufficient material was retrieved to allow EDS analysis, in the SEM. The EDS analysis detected only carbon in the black residue and the SEM examination also indicated that the residue was not electrically conductive, eliminating graphite. With these characteristics, it was concluded that this black residue is most likely residual combustion product of some contaminant present in the valve, possibly Nitrile. An analysis of the potential for combustion to occur in the check valve in the event the check valve is not fully closed during engine shut down is included in the appendix of this report. No evidence for ignition, surface melting, or local heating (heat tint) was observed on any of the valve details.

White Contaminants

The five white particles, Figure 7, retrieved from the Aclar sheet after the valve was disassembled were analyzed by FTIR for identification. The particle identified as "A" was determined to be a thin piece of nylon with an adhering cotton fiber. The particles

identified as "B" and "C" were both cotton, with "B" having the appearance of fabric and "C" appeared as a balled up length of thread. Particles "D" and "E" were both solid fragments of nylon. The particle found on the adhesive side of the "LOX tape" (RB0195-002) was identified as a cotton fiber. The dimensions of these particles are summarized in Table 1. Numerous sources for both the nylon and cotton exist within the Rocketdyne manufacturing areas.

Sealing Surface Residue

The nylon swab that was used to wipe the seal land of the valve body was analyzed by FTIR. Insufficient material was present on the swab to draw any conclusion.

ME&T CONTAMINATION ANALYSES RESULTS - SSME 2011

RS008059-141 CHECK VALVE, S/N 4873034 (R0010828-031 CHECK VALVE LINE ASSY, S/N 4925685) IDCR 987174 (#1)			
PARTICLE LABEL	DIMENSIONS (INCHES)	IDENTIFICATION	COMMENTS
A	.045 X .011 X .002	NYLON W/ COTTON FIBER	AFTER CUT APART, GATHERED FROM ACLAR SURFACE FOLLOWING VALVE DISASSEMBLY
B	.104 X .015	COTTON	"
C	.041 X .038	COTTON	"
D	.045 X .025 X .005	NYLON	"
E	.077 X .040 X .004	NYLON	"
F	.022 X .010	NYLON	MOST LIKELY FROM PARTICLE E
BLACK RESIDUE	-	MAJOR CARBON	LOCATED UNDER POPPET CAP
BLACK PARTICLE	.146 X .046 X .018	NITRILE RUBBER	LOCATED ON POPPET FACE
POPPET SEAL SURFACE	-	INSUFFICIENT SAMPLE PRESENT FOR CONCLUSIVE RESULTS	SWAB SAMPLE TAKEN OF POPPET SEAL FACES
TAPE CONT.	.096 X .023	COTTON	LOCATED ON ADHESIVE SIDE OF TAPE USED AS MASK FOR VALVE INLET

TABLE 1

FIGURE CAPTIONS

Figure 1. Large black particle found on upstream side of poppet outboard of sealing surface after valve disassembly. (1 div = 1mm)

Figure 2. Large black particle found on upstream side of poppet outboard of sealing surface after valve disassembly. (1 div = 1mm)

Figure 3. Cross section of large black particle found on upstream side of poppet outboard of sealing surface after valve disassembly. (44X)

Figure 4. Energy Dispersive Spectroscopy (EDS) spectrum of large black particle found on poppet.

Figure 5. Energy Dispersive Spectroscopy (EDS) spectrum of exemplar Nitrile O-ring (MS28775-012).

Figure 6. Fourier Transform Infrared (FTIR) spectra of large black particle found on poppet and exemplar Nitrile O-ring (MS28775-012).

Figure 7. The five white particles retrieved from the Aclar sheet after valve disassembly. (11X)

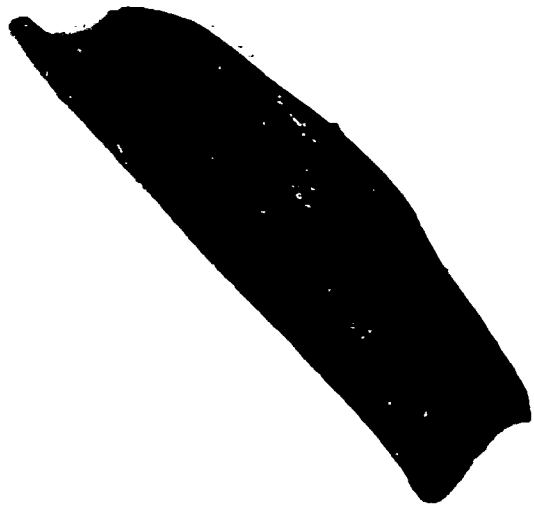

RS008059-141 CHECK VALVE, S/N 4873034 SSME 2011
NITRILE RUBBER PARTICLE 1 DIV = 1mm

FIGURE 1

RSS008059-141 CHECK VALVE, S/N 4873034 SSME 2011
NITRILE RUBBER PARTICLE 1 DIV - 1mm

FIGURE 2

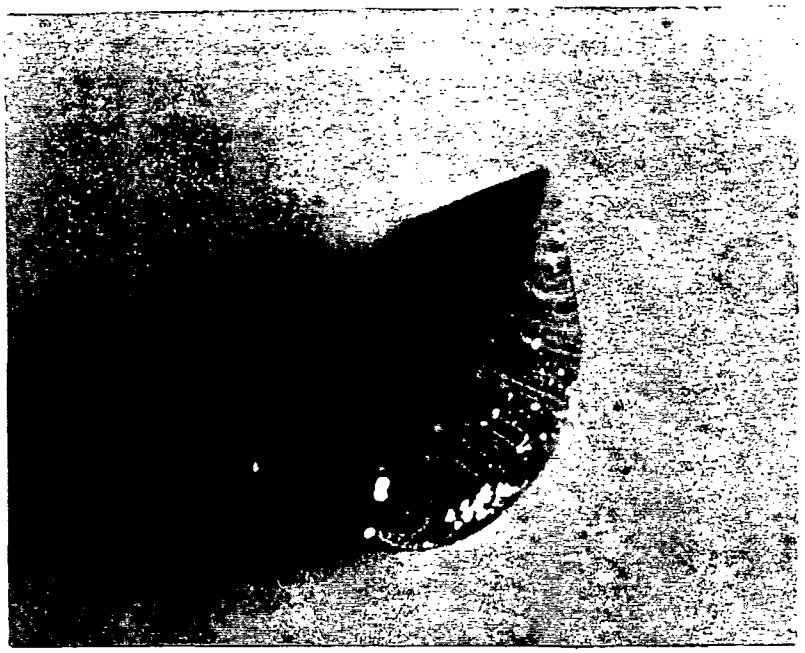

RS008059-141 CHECK VALVE, S/N 4873034 SSME 2011
NITRILE RUBBER PARTICLE CROSS SECTION 44.1X

FIGURE 3

JSM-840 Z-MAX 30 SERIES II MICROBEAM LAB TUE 18-MAY-93 11:21

Cursor: 0.000keV = 0

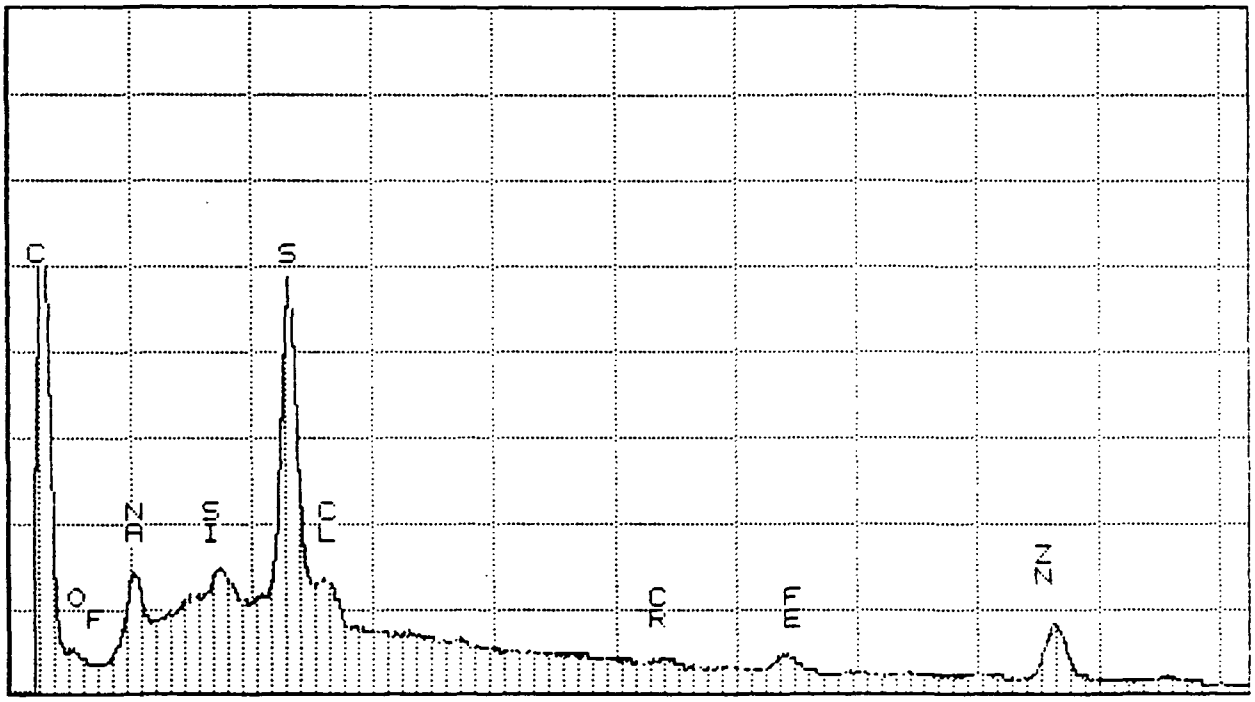

0.000 VFS = 4096 10.240

120 0393I146, D#17-20, STS 55 CHECK VALVE, CNTMN

FIGURE 4

JSM-840 Z-MAX 30 SERIES II MICROBEAM LAB TUE 18-MAY-93 11:23
Cursor: 0.000keV = 0

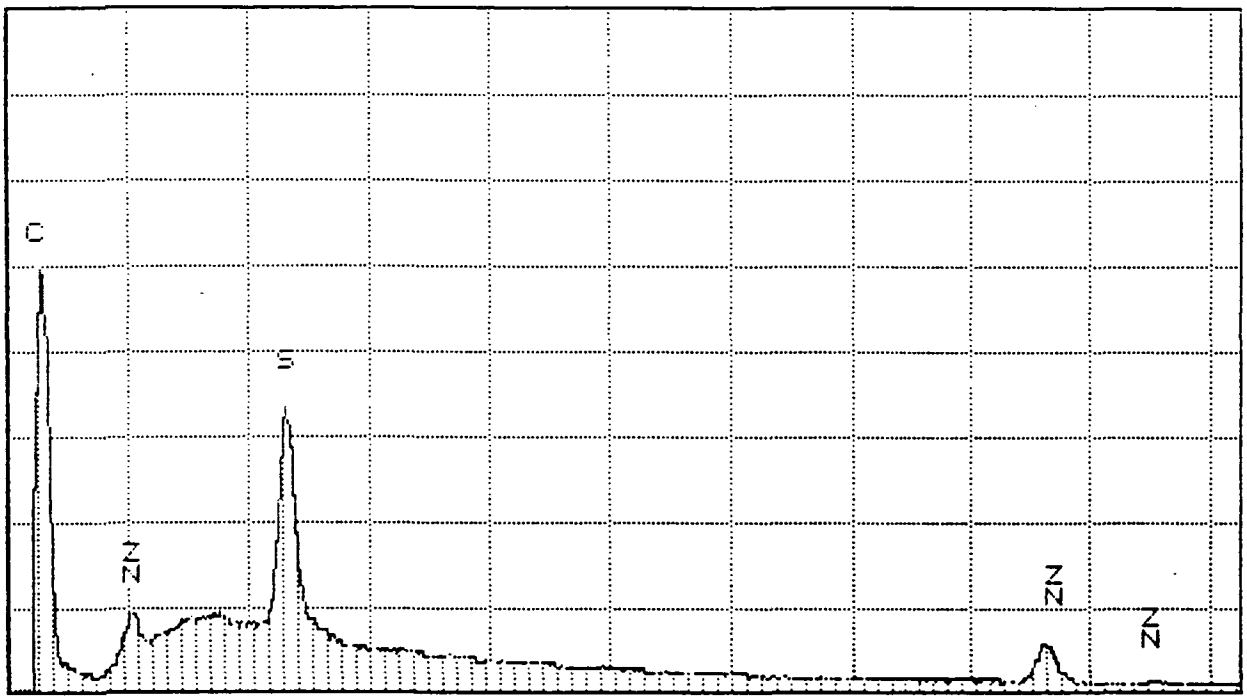

0.000 VFS = 4096 10.240
120 0393I146, D#17-33,O-RING P/N MS28775-012

FIGURE 5

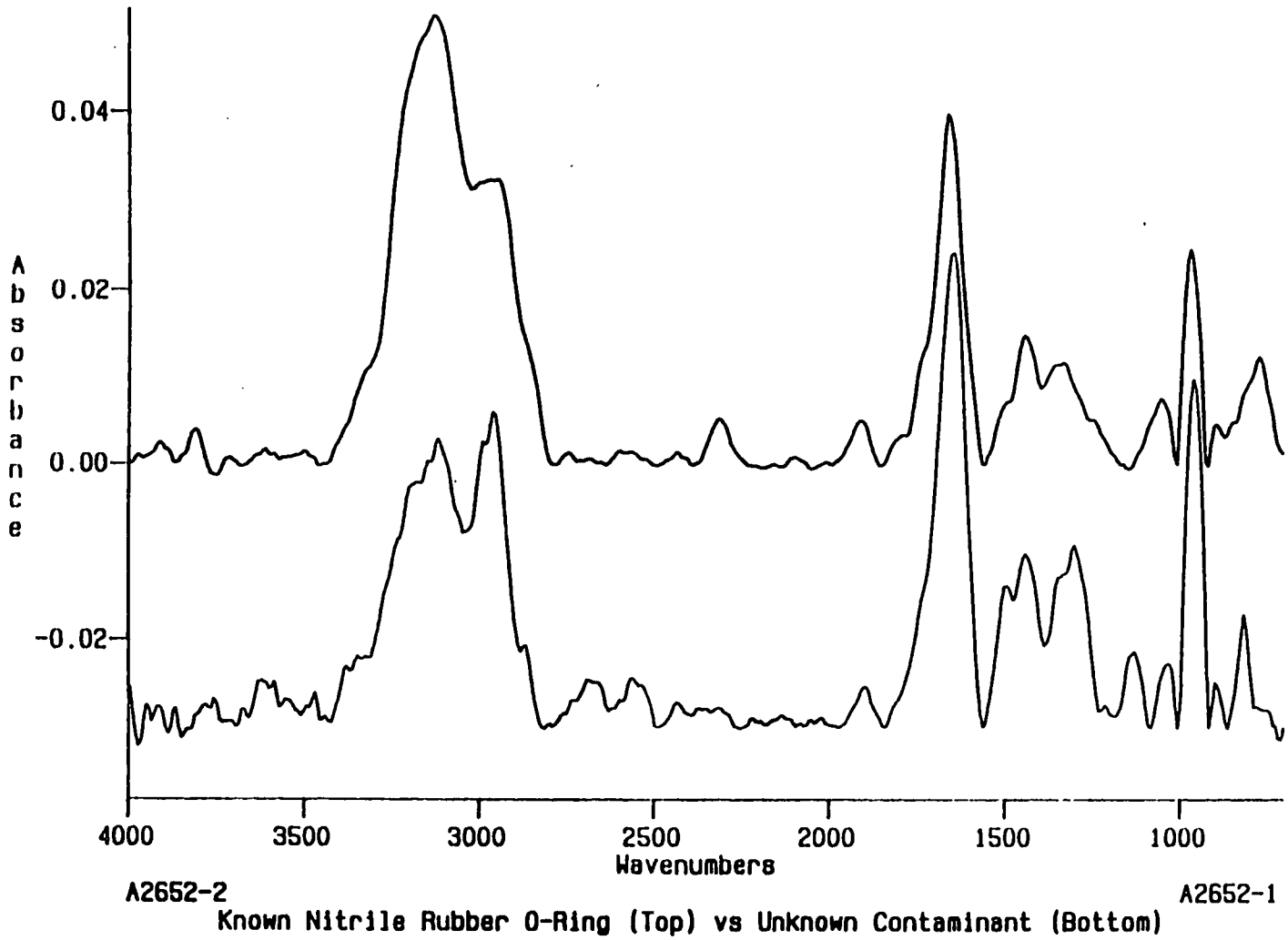
0.04
0.02
0.00
-0.02
Absorbance
4000
3500
3000
2500
2000
1500
1000
Wavenumbers
A2652-2
A2652-1
Known Nitrile Rubber O-Ring (Top) vs Unknown Contaminant (Bottom)

FIGURE 6

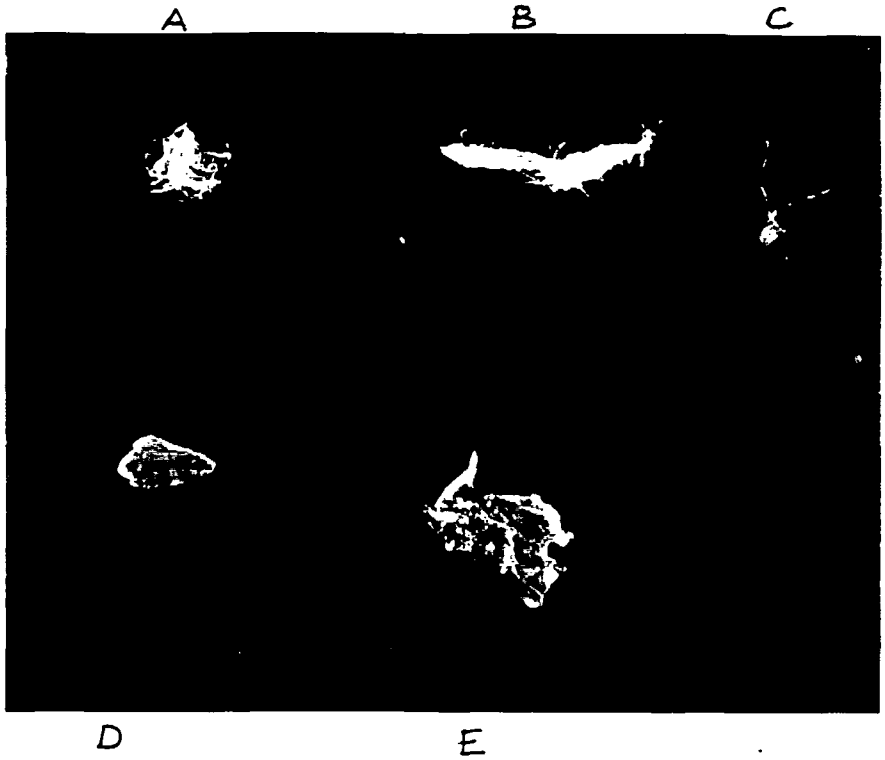

RS008059-141 CHECK VALVE, S/N 4873034 SSME 2011
PARTICLES A, B, C, D, E 10.9X

FIGURE 7

Section 7.0

Buna-N (Nitrile) Ignition Analysis

BUNA-N IGNITION ANALYSIS
SUMMARY

SSME Aerothermodynamics studied the implications of the Buna-N particle contamination and the carbon (soot) deposit that were found in the OPB ASI check valve of main engine 3. Specifically, various analyses supported the scenario that backflow of oxygen through the check valve during engine start was most probably due to the Buna-N particle contamination, and that the carbon residual was a by-product of the same, or similar non-LOX compatible material, that ignited within the valve.

The mechanism for Buna-N particle heating and ignition associated with the backflow of oxygen is explored analytically. Estimates are made of the extent of damage to the valve metal components in the event that the Buna-N particle combustion generated sufficient heat to cause metal ignition. It is concluded that while the potential to ignite Buna-N particles larger than that found in engine 2011 was created by the oxygen backflow, the damage to the metal, in the worst particle and metal burning orientation, would have been contained by the limited amount of time available for metal to burn prior to the helium purge taking effect. However, it also becomes evident from these studies that the fuel-like behavior of a contaminant like Buna-N, in proximity to the oxygen environment in the preburner domes, cannot be taken lightly, and that efforts to rid the engine of such contamination remains the best protective measure that will ensure against the potential for catastrophic engine failure.

Oxygen Backflow and Adiabatic Compression

Purge line pressure data from Figure 1 shows oxygen obviously backflowed into the purge system. Using typical OPB chamber pressure data from short engine ignition tests, the timeline of Figure 2 was constructed. Here it is shown that oxygen can backflow into the purge line from roughly 1.0 to 1.8 seconds after engine start, driven by the increasing OPB dome pressure (OPB chamber pressure is shown rather than dome pressure since the latter is not measured). Later, from 1.8 to 2.04 seconds, it appears that the high OPB chamber pressure reduced the valve poppet gap for leakage by squeezing the particle, such that the PCA overboard drain began to reduce the purge system pressure. However, at 2.04 seconds, the helium purge is introduced at 750 psia and rapid compression of the oxygen in the purge lines follows.

Given the filling time of between 1.0 to 1.8 seconds, it can be estimated that the shaded line at 012.1.4 shown in Figure 3 was full of oxygen prior to the compression phase. Assuming proportional volume displacement, the 750 psia helium purge would drive an estimated 0.28 in^3 of compressed oxygen into the bore of the ASI check valve poppet. The gox would fill 4 inches of the 0.305 inch diameter cylindrical bore as indicated in Figure 4. This translates to a total mass of the oxygen of 0.00036 lb. at 750 psia, available for ignition of the Buna-N.

The potential for starting ignition in gaseous oxygen systems due to adiabatic compres-

sion is well accepted by those who work with combustion phenomena, and consideration of this process is typically a part of the design of such systems. Various articles, (examples can be found in references 2 to 5), uniformly approach the formulation of this process by an isentropic compression of an ideal gas from some initial pressure p_1 to a higher pressure p_2. From gas dynamics, the increase in the pressure is accompanied by an increase in the gas temperature from T_1 to T_2 given by,

$$T_2/T_1 = [\, p_2/p_1]^{(k-1)/k}$$

where k is the ratio of specific heats for the gas. For oxygen, at the pressures and temperatures of interest, k= 1.5, and the exponent of the pressure ratio is (k-1) /k = 1/3. This gives an absolute temperature ratio T_2/T_1 = 2.32 for a pressure ratio of 750/60= 12.5. As shown in Figure 4, a final temperature of T_2= 1160°R is obtained from an initial temperature of T_1= 500°R. Since the compression of the oxygen would proceed rather quickly, non-isentropicity of the unsteady flow would yield a slightly higher temperature, but this effect is neglectable. Further, it should be mentioned that an initial pressure lower than 60 psia would lead to a higher pressure ratio and thus a higher final temperature. This suggests that the worst case GOX temperature can be attained when the backflow rate is just the right magnitude that the lines fill but do not pressurize above 20 psia. This can result in a final temperature of 1680°R after the compression, but with only 20/60= 1/3 of the mass of compressed oxygen in the valve poppet bore shown in Figure 4.

Buna-N Particle Heating Analysis

The study of the Buna-N particle heating from 2.04 to 2.8 seconds was simplified by using idealized spherical particles, with the original intent of relating the results to the round spot formed by the soot trace found at the base of the poppet. The surface temperatures of the particles were predicted for various events in the timeline of Figure 2, using the best estimates of the fluid conditions within the valve, and starting with a uniform temperature of 485°R due to the GN_2 purge prior to engine start. The Schneider chart [6] for the 1-D transient solutions for a sphere, suddenly exposed to uniform convection from a fluid environment, was used in the prediction of the surface temperature. The results are tabulated in Figure 5.[7]

A criteria that can be used to decide if the Buna-N is going to ignite is to compare the calculated surface temperature shown in Figure 5 at 2.8 seconds to the predicted autoignition temperature of the material. However, the ignition temperature reported in the literature varies considerably according to the test method, the heating conditions used in the tests (which is not even similar to the fast adiabatic compression heating), and the condition of the material. For instance, the flash and fire points for Buna-N were reported to be 791°R (331°F) in 2200 psia GOX for 70 Durometer hardness material.[8] The method in this case relies on gasification of the volatiles in the nitrile rubber to initiate and sustain ignition with a spark located 3/4 inch above the specimen. Using this as the ignition temperature criteria and comparing it to the calculated surface temperatures in

Figure 5, it is concluded that spherical particles 0.1 inch diameter and greater cannot be ignited up to 2.87 seconds when the oxygen is purged out of the valve. However, older reports indicate that shavings of Buna-N material of presumably smaller size were ignited at 743°R (283°F) in 750 psia flowing GOX. This temperature is still higher than the usual upper service temperature limit for nitrile rubber of 250°F. With this as the ignition temperature criteria, even 0.1 inch diameter particles can be ignited in the given time, although no time will be left for metal ignition.

Subsequently, it was decided that other models of the particle heating process were also necessary for the various particle orientations explored for Buna-N ignition as shown in Figure 6.[9] For a block-like piece, the worst orientations for particle heating are cases D and E, where the particle can be heated simultaneously from two faces around a corner. In these situations, and in those where an irregularly shaped particle can have a thin section heated from both sides, the time to raise the surface temperature to autoignition may be significantly reduced. In particular, for case D in Figure 6, heating only from the narrow edge as a semi-infinite solid, the surface temperature can reach 791°R in 0.25 second. This leaves 0.55 second for the particle to burn and ignite metal out of the available time of 2.87 - 2.04= 0.8 second. The subject of Buna-N ignition is discussed in the next section.

Buna-N Particle Combustion - Scope of Analysis

The amount of energy release and the distribution of that energy from the ignited Buna-N particle depend on several variables that are classified into three groups as follows. First, there are the particle's orientation, size, and shape. Second, there are the combustion and flame spread characteristics of Buna-N, which include the ignition temperature discussed in the previous section, the heat of combustion, the flame temperature; and the burn rate. Third and not necessarily of least significance, there are the fluid mechanics and heat transfer mechanisms involved in the combustion, which include the type of flame, and the manner by which oxygen and fuel is accessed by or supplied to the flame, and the manner by which the products are expelled from the combustion zone. It quickly became obvious that it was impossible to answer all the questions related to these parameters in the 5 weeks devoted to the study of the STS-55 anomaly, particularly when it also became evident that metal ignition, which has its own similar set of parameters, also required serious consideration. Therefore, the approach taken was to utilize available data whenever possible, but to be conservative in the interpretation and application of such data from whatever source to the thermal models, whenever there were relevant questions that could not be clearly answered by these data.

The first group of parameters mentioned above is effectively explored by the cases shown in Figure 6. Sustained combustion of the particle in cases D and E of Figure 6 is considered to be most severe due to the more intimate contact between the Buna-N and the metal. It is in this situation where a laminar diffusion flame of a burning solid fuel (the Buna-N particle) will produce a flamefront that will be closest to the metal surface, and where the heat transfer from the flame and the combustion gases to the metal would be most intense. The earlier analytical efforts related to the baseline orientation case A, and

the other cases B and C, were therefore quickly surpassed by the more important cases D and E. The baseline model is discussed first below, followed by the severe case D.

Buna-N particle Combustion - Baseline Model

This model immediately showed the importance of the second group of variables. Uncertainties were uncovered in the flame temperature, the burn rate, and therefore, the amount of heat delivered to the metal. The flame temperature was originally assumed to be 4800°R based on the "adiabatic temperatures" of 4815°R and 4890°R found in the literature for Buna-N volatiles Butadiene and Acrylonitrile, respectively, burning in atmospheric air.[10] A flame temperature of 5400°R corresponding to the stoichiometric temperature for natural gas was also used for sensitivity studies, as it was suggested that the volatiles of Buna-N will burn similar to natural gas.

An attempt to measure the Buna-N flame temperature in still air at Rocketdyne's Material Engineering laboratory yielded 1760°R (1300°F).[11] From this data, and a heat of reaction of 15,250 Btu/lb (8400 cal/g) from Lowrie[12], a heat of formation for solid Buna-N was calculated to be 4650 Btu/lb (2570 cal/g) assuming complete stoichiometric burning in air. This information was then used to compute a stoichiometric flame temperature in pure GOX of 4320°R. An increase of 500°R from 4320°R is well justified for burning in 750 psia oxygen rather than 14.7 psia. However, it should be pointed out that dissociation of the stable species occurs at temperatures significantly above 2250°R (see for example Glassman[13]). such dissociation would tend to lower the flame temperature. At this point, it was decided that the flame temperature of 4800°R was reasonable and adequately conservative. The Buna-N particle was modelled as 50% C_4H_6 (Butadiene) and 50% C_3H_3N (Acrylonitrile). The actual composition is more like 50% volatiles, 45% carbon filler, and 5% binding agent. It was determined from a thermal gravimetric analysis[11] with slow heating in air that the volatiles gasified and oxidized first, followed shortly by the carbon, at a temperature as low as 1570°R (600°C).

Next came the quandary on the ignition characteristics and burn rate of Buna-N. A burn rate of 0.4 in/sec was obtained from the same type of test at the Rocketdyne's Materials Engineering laboratory in which the flame temperature was measured. The test uses a Bunsen burner to start ignition of the Buna-N sample from the bottom edge. The Bunsen burner is then removed and the flame is allowed to propagate upwards, lengthwise of the sample. The sample is 1/16 inch thick, 12 inches long and 2.5 inches wide. The burn rate from this type of test is strongly enhanced by the buoyancy of the hot combustion products, because the plume of the products rises and engulfs the unburned portion of the specimen as the burning proceeds.

Since for the baseline particle orientation the flame can start from the edges or the top face, and proceed both horizontally and vertically downward through the thickness, the flame spread will not be buoyancy assisted as in the case of the upward propagation tests in the laboratory. Thus it is suspected that the burn rate can be significantly slower than 0.4 in/sec. However, what is strongly buoyancy controlled in the baseline particle

orientation case is the emission of the hot combustion products into the GOX column and the helium above the GOX, such that a large percentage of the heat released by the combustion is transferred to the surrounding gas by convective mixing and not to the metal, and the burn rate becomes a less significant factor to the metal heating. Thus for the baseline case, a burn rate of 0.4 in/sec through the particle thickness was used to estimate the time of heating of the metal from the burning Buna-N.

The heat transfer was done conservatively with a high heat transfer coefficient value of 4000 Btu/hr-ft^2-°R and a flame temperature of 4800°R. The value of the heat transfer coefficient translates to a constant flamefront to metal distance of 50 μ inches. The results are shown in Figure 7. A block 0.160 inch thick with a base area of 0.146 inch x 0.046 inch would have to be consumed before the metal surface temperature can reach the ignition point of 2800°R. Only 10% of the heat of combustion of the Buna-N consumed is transferred to the metal, and the particle will be consumed in 0.40 second. This particle is equivalent to a 1/8 inch diameter sphere, which based on the heating studies is unlikely to be autoignited in 0.8 seconds.

Buna-N Particle Combustion - Worst Orientation

Once the burning of the Buna-N is started, it is expected that the volatiles would continue to sublimate due to heating from the flame, and react with the oxygen such that a thin stoichiometric flame layer is formed that closely follows the receding surface of the solid Buna-N. For the case of the worst oriented particle burning from the inboard edge, this suggests a moving flamefront with the flame and the outflow of the combustion products simultaneously contributing to the heat transfer to the metal. This condition is sketched in Figure 8. Obviously in this case, the burn rate becomes a significant factor, as it controls the amount of time that the two metal surfaces close to the Buna-N will be exposed to the flame and the hot gas products.

Glassman[13, 14] and Williams[15] both detail condensed phase burning theory, and both provide the same model for estimating the fuel vaporization rate (in effect the burn rate) due to the laminar diffusion flame. From this model, a burn rate as low as 0.05 inch/sec was calculated. With a wide range for the burn rate from 0.05 to 0.4 in/sec, a parametric analysis was conducted on a pseudo-3D thermal model of the poppet and valve body interface.

The pseudo-3D thermal model developed by Tri Tran is described in Figure 9. The pie section corresponding to the particle location was collapsed into one axisymmetric plane. Due to the added complication of tracking the melted portion of the metal in the modeling, and the limited time available for the study, a full 3D model was avoided. The result of this analysis is depicted in Figure 10.[16] For a temperature of 4800°R for the Buna-N flame, a burn rate of 0.12 in/sec or lower would bring the Haynes 188 to melting and ignition. For a particle width equal to the 0.036 inch poppet sealing face, the Buna-N will be consumed and the metal will reach ignition temperature in 0.3 second. Adding to this the time required to autoignite the Buna-N particle, there remains 0.80 - (0.30 + 0.25) =

0.25 second for metal ignition. This is the topic of the following sections.

Haynes 188 Metal Ignition - Scope of Analysis

The Glassman criteria for the burning of condensed phases, (i.e., liquids and solids), can be extended to the combustion of metals.[14] But as to be expected, metals have different burning characteristics compared to typical solid or liquid combustibles or fuels. The important characteristics that apply to the current problem relate to the mechanics of the melting, the flame structure, and the oxidation of the metallic element or elements if the metal is an alloy. The ASTM publications in references 2 to 5 can be consulted for more recent articles particular to promoted metals ignition. Also, found relevant to the situation studied here are the recent papers by Sato et. al. on metal fire spread,[17, 18, 19] the earlier paper by Dean and Thompson[20] with data on ignition characteristics of Cobalt based alloy Haynes 25, and the paper by Grosse and Conway[21] for general metals combustion and properties of metal oxides. In particular, Dean and Thompson report ignition of Haynes 25 occurred within the melt range of around 2800°R, with up to 70% of the rod specimens consumed at a pressure of 300 psia in the promoted ignition tests.

Two possible scenarios for metal burning are arrived at.[22] The burn rate and flame temperature is expected to be dictated by the oxide vaporization, and the rate would be slow. This is called the "oxide inhibited" case, and would occur if the valve is oriented reasonably upright to gravity as shown in Figure 11a such that a pool of molten metal and oxide is formed between the flame and the solid metal. The other case, more severe from the "burnthrough" standpoint, allows for gravity assisted removal of the molten material in the case of a valve that is upside down relative to gravity (Figure 11b). In this case, fresh solid metal preheated by conduction effects is steadily exposed to the flame, and the flow of the molten material itself can help spread the burning. This is called the "oxide noninhibited" case.

Haynes 188 Metal Ignition - Oxide Inhibited

The elemental composition of Haynes 188 is shown in Figure 12, together with the respective oxides, and the available data on the melting and boiling points of both from various sources. The highest oxide boiling temperature belongs to the oxide of Chromium, Cr_2O_3, equal to 5940°R. Based on previous experience with metals ignition, (see Glassman[14] and Sato[19] for example), the flame temperature for vapor phase burning can be expected to be that of the oxide if the boiling point of the oxide is higher than the boiling point of the element. Since this is true except for the 14.55 Tungsten present in Haynes 188, the boiling point of Cr_2O_3 was used for the flame temperature in the thermal model. It is interesting to note from Figure 12 that although pure Tungsten has high melting and boiling points, the melting and the boiling of its oxide, WO_3, occur at lower temperatures. As anticipated, the 1-D model of the poppet wall developed by Jim Depsky for the oxide inhibited burning predicted only 0.008 inch depth of molten metal after 0.25 second.

Haynes 188 Metal Ignition - Oxide Noninhibited

The pseudo-3D model used for the Buna-N particle burning study was used also in the oxide noninhibited burning of Haynes 188. An effective heat transfer coefficient of 6000 Btu/hr-ft^2-°R was used with the flame temperature of 5940°R. The heat transfer coefficient was obtained by iteration with the 1-D model to match a mean fire spread rate of 0.3 inch/second reported by Sato for a 0.146 inch diameter steel rod, burning upward from an end. It should be emphasized here that this burn rate, and therefore the heat transfer coefficient derived from it, is conservative when applied to the model, in that the rod burning method used in Sato's promoted ignition tests is a more severe condition than burning from a finite area on the surface of the poppet. For rod burning, the continuous formation and detachment of the molten metal globule accelerates the metal removal, and only a small fraction of the metal that melts reacts with the oxygen prior to detachment of the globule. The detachment is of course a function of the surface tension of the molten metal, and for rod burning a simple force balance gives a molten mass globule diameter of 2 to 3 times the rod diameter. This implies that only about 1/5 of the metal melted reacts with oxygen, and the rest forms the globule that detaches intermittently as combustion proceeds.

The metal depth consumed based on Tri Tran's pseudo-3D model of the oxide noninhibited burning is plotted as a function of burn time in Figure 13, together with the oxide inhibited case discussed earlier. The melting for the oxide noninhibited case penetrates to 0.043 inch in 0.25 second, and does not burn through the poppet thickness of 0.155 inch even if the burn time is somehow extended to 0.50 second. The total amount of oxygen available within the valve at the onset of the metal ignition is consumed in 0.37 second. The heat transfer coefficient of 6,000 Btu/hr-ft^2 -°R and flame temperature of 5940°R used in the model in effect forces heating of the remaining solid Haynes 188 by 50% of the equivalent heat of combustion of the metal melting. This should be conservative since the 0.3 inch/second burn rate, derived from rod burning data for steel is conservative. Rod burning confines the heat to the axis direction, whereas a disc that starts burning on a finite area of one face actually has considerable 3-D conduction effects that spreads the heat.

CONCLUSIONS

1. The backflow of oxygen into the purge valves and lines during engine start leads to compressive heating of the oxygen during shutdown.

2. The compressive heating of the oxygen in turn can cause ignition of contaminant particles up to 0.1 inch diameter that are incompatible with gaseous oxygen, and can lead to metal ignition.

3. The damage to the metal due to ignition will be contained by the limited time available for combustion before the helium purge takes into effect, even in the worst case particle orientation.

REFERENCES

1. R. Principe, "STS-55 OPB Purge Check Valve Anomaly, Analyses of Teflon Thermal Binding and Sealing Face Contamination Scenarios", briefing charts BC-93-129-003, 3-26-93.

2. B. Werley, editor, ASTM STP 812, "Flammability and Sensitivity of Materials in Oxygen-Enriched Atmospheres", 1983.

3. S. Gebremedhin et. al., editorial staff, ASTM STP 910, "Flammability and Sensitivity of Materials in Oxygen-Enriched Atmospheres: Second Volume", April 1985.

4. D. Schroll, editor, ASTM STP 986, "Flammability and Sensitivity of Materials in Oxygen-Enriched Atmospheres: Third Volume", 1988.

5. J. Stoltzfus and K. McIlroy, editors, ASTM STP 111, "Flammability and Sensitivity of Materials in Oxygen-Enriched Atmospheres: Fifth Volume", 1991.

6. W. Rohsenow et. al., editors, "Handbook of Heat Transfer Fundamentals", 2nd edition, McGraw-Hill Book company, 1995.

7. J. Fasheh and R. Principe, "STS-55 OPB Purge Check Valve Anomaly, Combustion of Buna-N Particles", briefing charts BC-93-129-004, 4-2-93.

8. Data reported by Jeff Fink, D/539-166, of Rocketdyne's Materials Engineering & Technology Design Support from NASA document MSC-02681.

9. J. Fasheh and R. Principe, "STS-55 OPB Purge Check Valve Anomaly, Combustion of Buna-N Particles", briefing charts BC-93-129-005, 4-13-93.

10. CRC Handbook of Chemistry and Physics, 52nd ed., 1971-1972, p. D-76.

11. Data reported by Jeff Fink, D/539-166, of Rocketdyne's Materials Engineering and Technology Design Support.

12. R. Lowrie, "Heat of Combustion and Oxygen Compatibility", ASTM STP 812, 1983.

13. I. Glassman, "Combustion", Academic Press, 1977.

14. I. Glassman, "Combustion of Low Volatility Materials in Oxygen-Enriched Atmospheres", ASTM STP 1111, 1991.

15. F. Williams, "Combustion Theory, The Fundamental Theory of Chemically Reacting

Flow Systems", Addison-Wesley Publishing Company, In.

16. J. Fasheh and R. Principe, "STS-55 OPB Purge Check Valve Anomaly, Combustion of Buna-N Particles, briefing charts BC-93-129-008, 4-23-93.

17. J. Sato and T. Hirano, "Behavior of Fire Spreading Along High Temperature Mild Steel and Aluminum Cylinders in Oxygen", ASTM STP 910, 1985.

18. J. Sato et. al., "Fire Spread Mechanisms Along Steel Cylinders in High Pressure Oxygen", Combustion Science and Technology, 32, 1983, pp. 137-159.

19. J. Sato et. al., "Prediction of Metal Fire Spread in High Pressure Oxygen", Combustion and Flame, 51, 1983, pp. 279-287.

20. L. Dean and W. Thompson, "Ignition Characteristics of Metals and Alloys", ARS Journal, July 1961.

21. A. Grosse and J. Conway, "Combustion of Metals in Oxygen", Industrial Engineering chemistry, 50, April 1958, pp. 663-672.

22. J. Fasheh et. al., "STS-55 OPB Purge Check Valve Anomaly, Combustion of Buna-N Particles", briefing charts BC-93-129-009, 5-4-93.

ME-3 PURGE PRESSURE REDLINE

EXCEEDED LIMIT AT 1.44 SEC

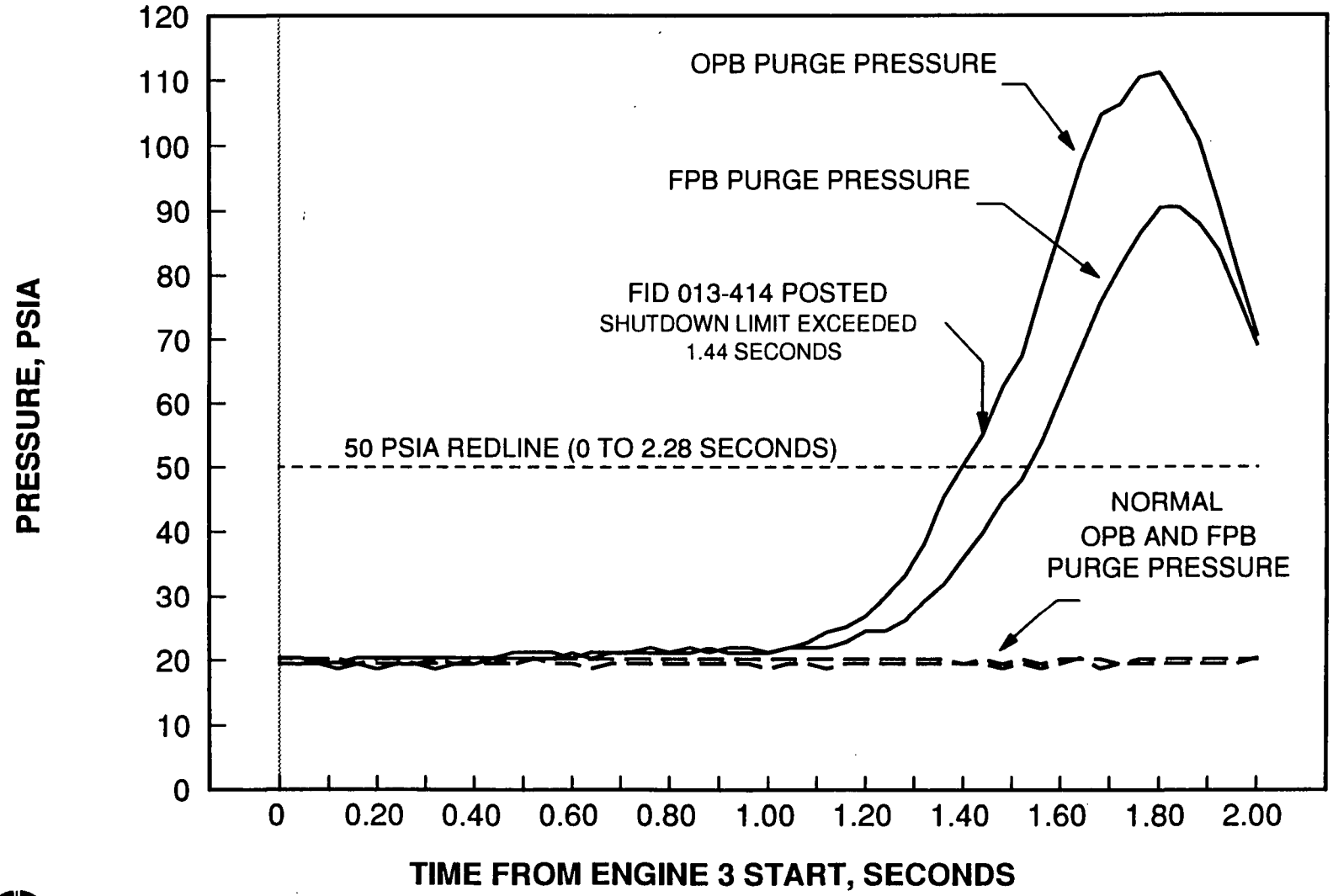

Rockwell International
Rocketdyne Division

FIGURE 1

A:\PBPPR1.DRW

STS-55 OPB PURGE CHECK VALVE ANOMALY

GOX PRESSURE / TEMPERATURE TIMELINE

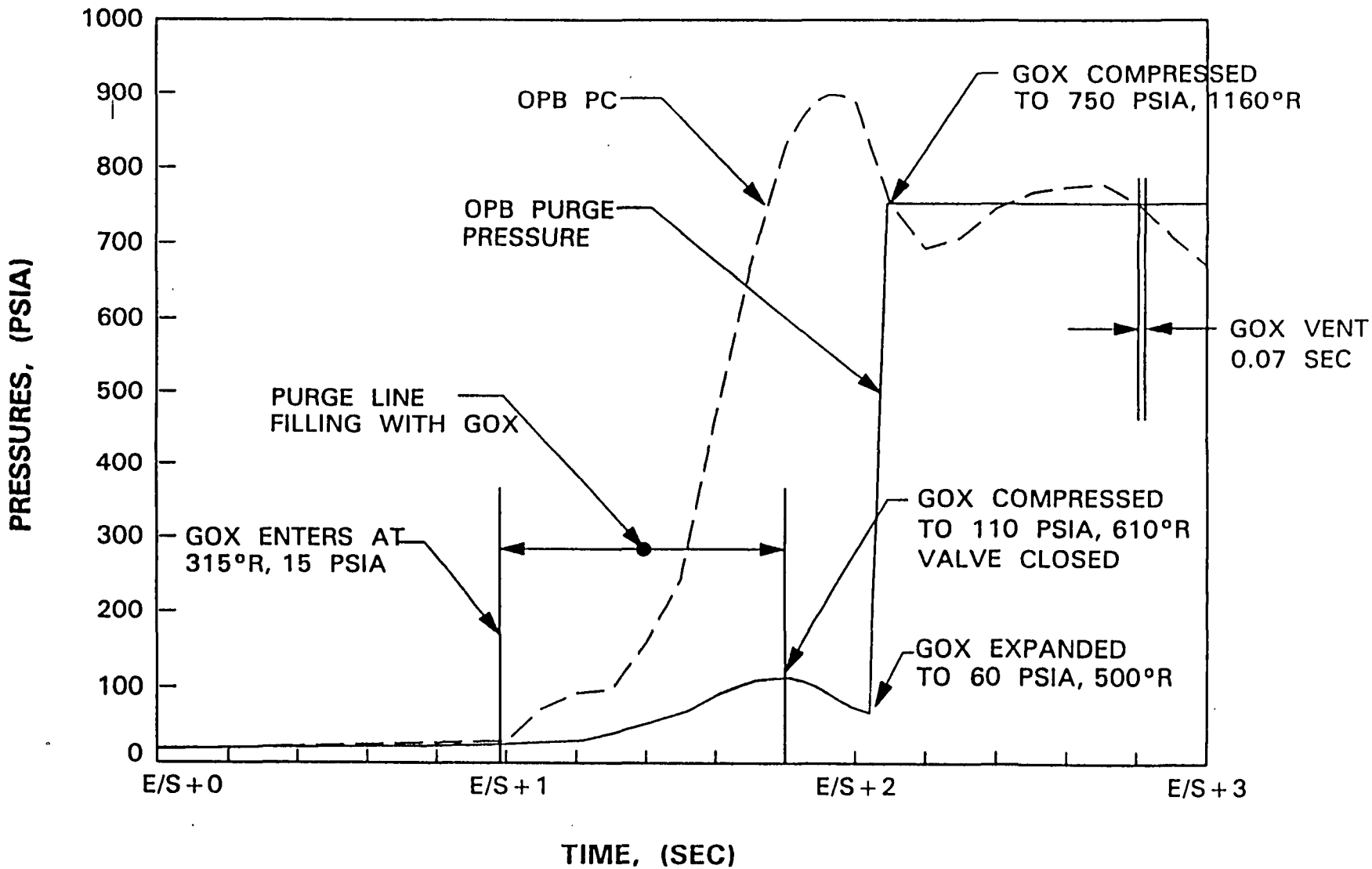

FIGURE 2

PURGE CHECK VALVE SYSTEM

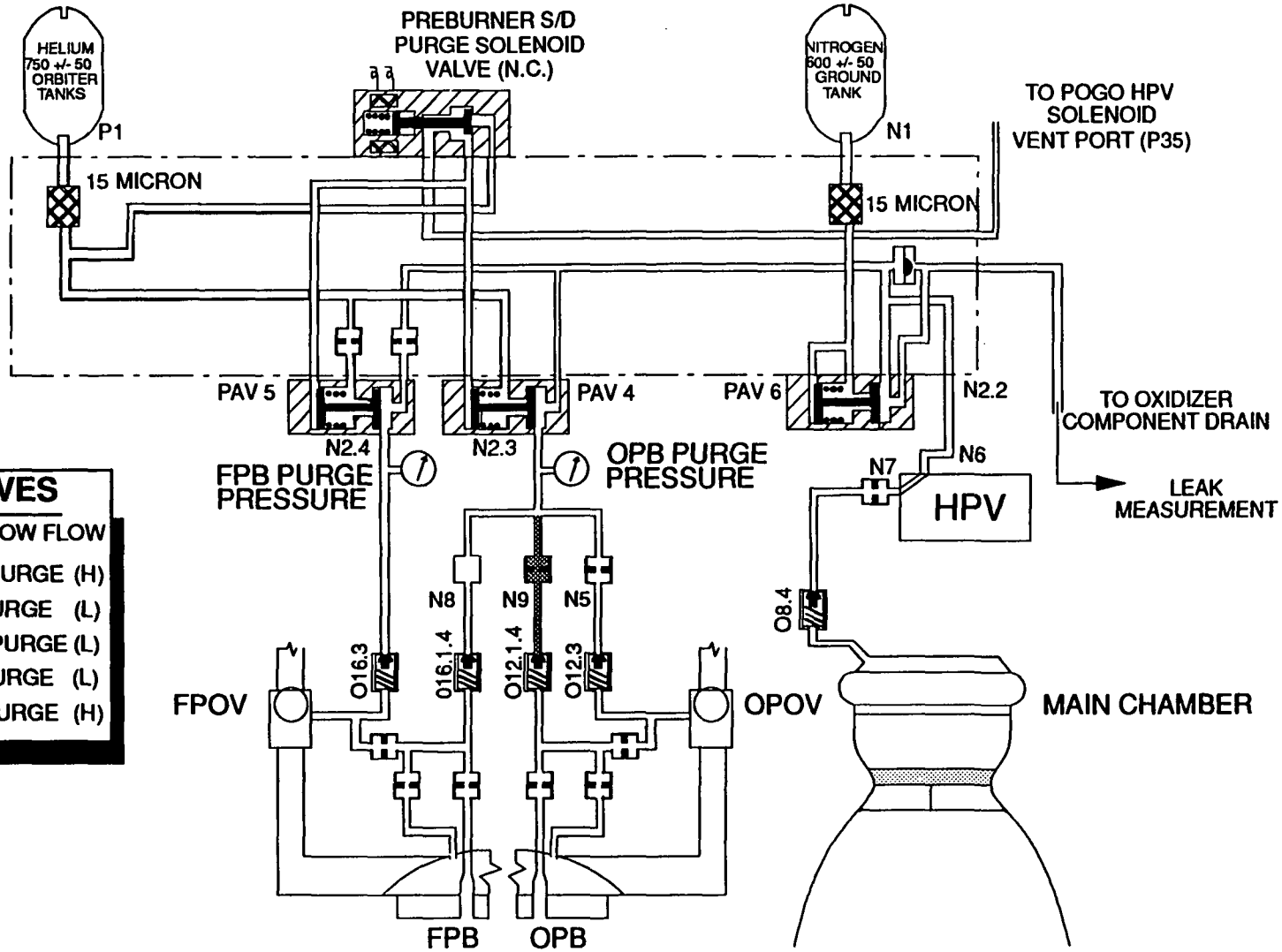

CHECK VALVES

(H) HIGH FLOW (L) LOW FLOW

O16.3 FPB DOME PURGE (H)
O16.1.4 FPB ASI PURGE (L)
O12.3 OPB DOME PURGE (L)
O12.1.4 OPB ASI PURGE (L)
O8.4 MCC DOME PURGE (H)

57EXE36G4-P1

Rockwell International
Rocketdyne Division

FIGURE 3

ADIABATIC COMPRESSION OF GOX
IN THE OPB ASI CHECK VALVE

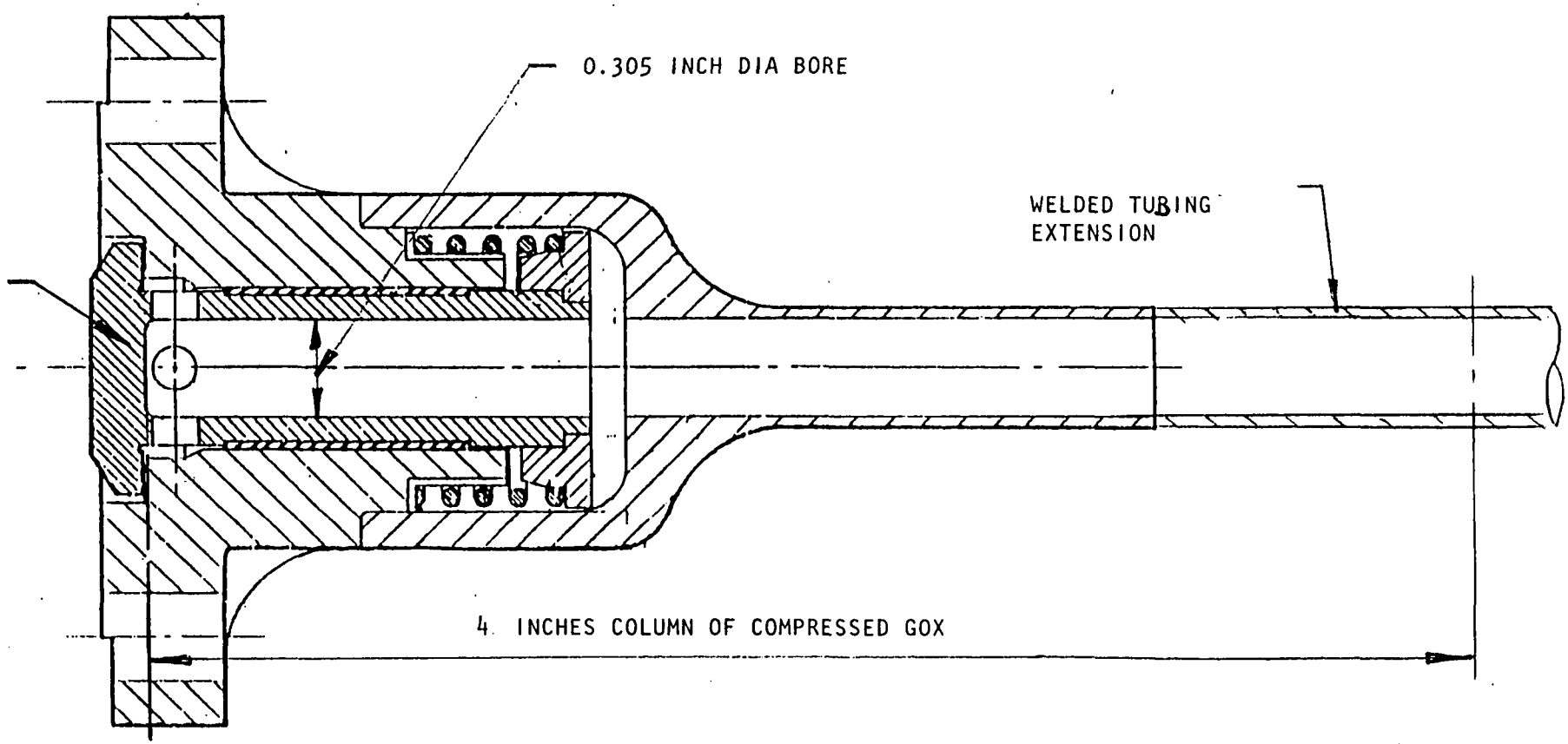

FIGURE 4

Rockwell International
Rocketdyne Division

STS-55 OPB PURGE CHECK VALVE ANOMALY

SMALL PARTICLE HEATING RESULTS

TIME FROM E/S, SEC	0	1	1.8	2.04	2.8	2.87	2.04-2.87
GAS	GN2	GN2	GOX	GOX	GOX	GOX	GOX
GAS PRESS, PSIA	15	15	110	60	750	750	60-750
GAS TEMP, °R	485	315	610	500	1160	1160	860
PARTICLE SURF TEMP, °R							
0.1 INCH DIA	485	485	485	490	600	740	581
0.06	485	485	485	492	710	840	617
0.03	485	485	485	497	910	1010	746
0.01	485	485	485	500	1130	1155	856

FIGURE 5

STS-55 OPB PURGE CHECK VALVE ANOMALY
POSSIBLE SCENARIOS OF PARTICLE COMBUSION

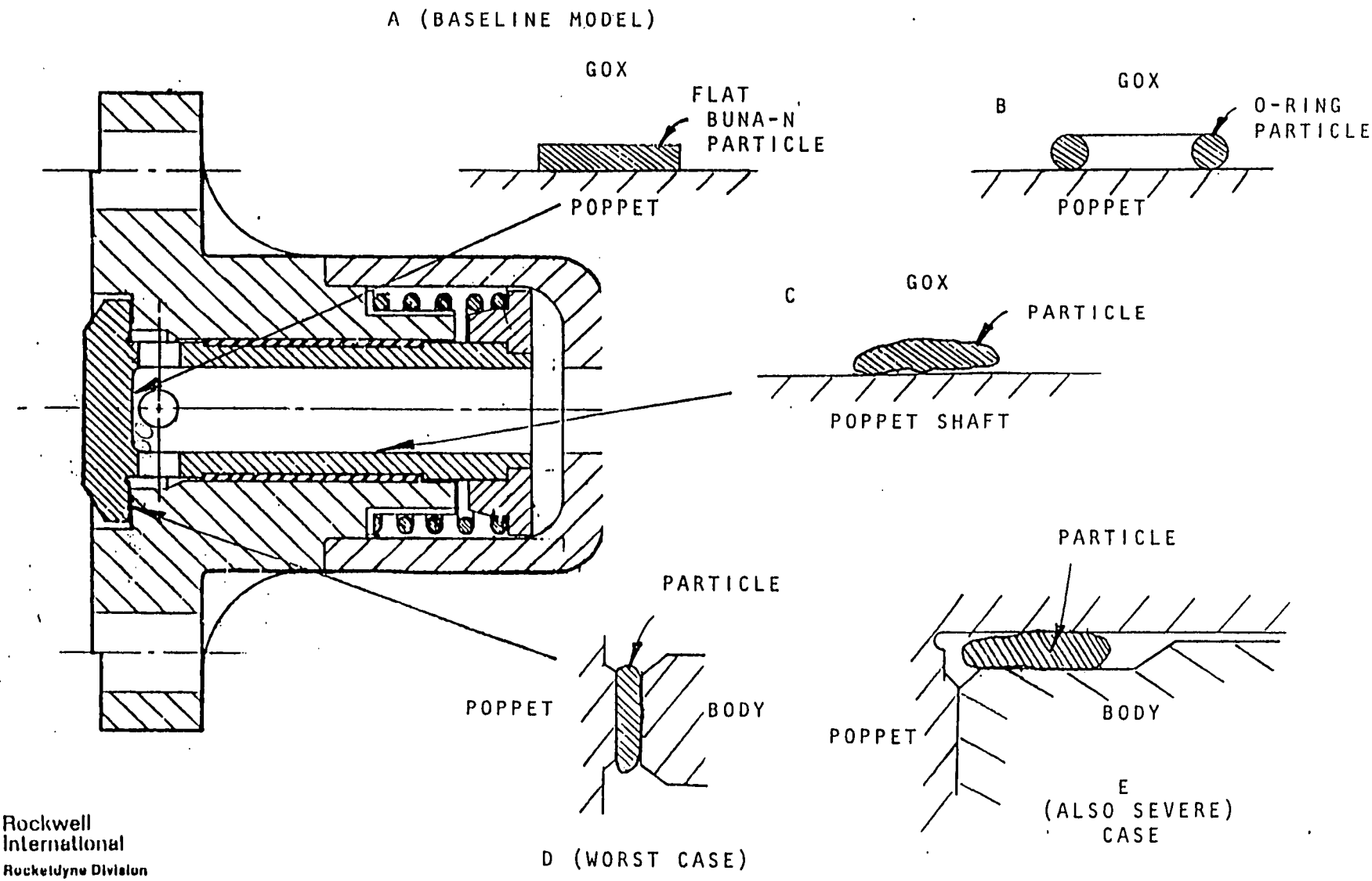

FIGURE 6

Rockwell International
Rocketdyne Division

STS-55 OPB PURGE CHECK VALVE ANOMALY PARTICLE COMBUSTION BASELINE MODEL RESULTS

THICKNESS OF PARTICLE (INCH)*	TOTAL HEAT RELEASE (BTU)	TIME TO BURN THROUGH (SEC)**	% OF HEAT DELIVERED TO POPPET	MAX SURFACE TEMP (°R)
0.018	0.064	0.045	12.2%	2190
0.054	0.192	0.135	11.0	2550
0.072	0.256	0.180	10.7	2620
0.108	0.320	0.270	10.3	2690
0.160	0.384	0.40	10	2800

* 0.046 INCH WIDE X 0.146 INCH LONG BROAD FACE.

** BURN RATE OF 0.4 IN/SEC.

FIGURE 7

STS-55 OPB PURGE CHECK VALVE ANOMALY

TRAPPED BUNA-N PARTICLE ORIENTATION

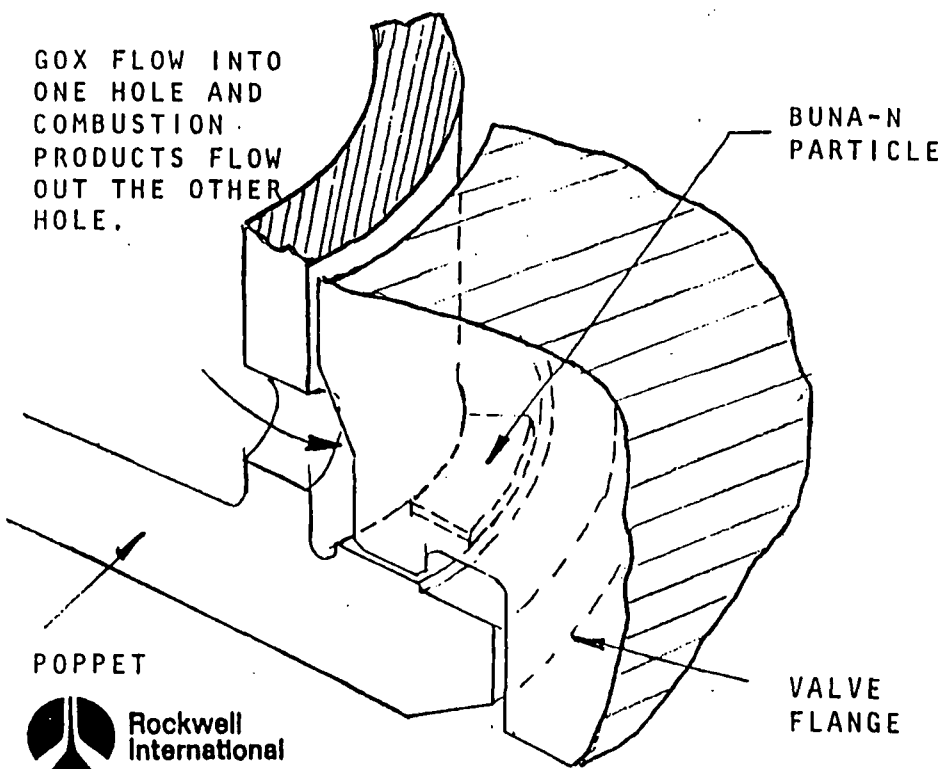

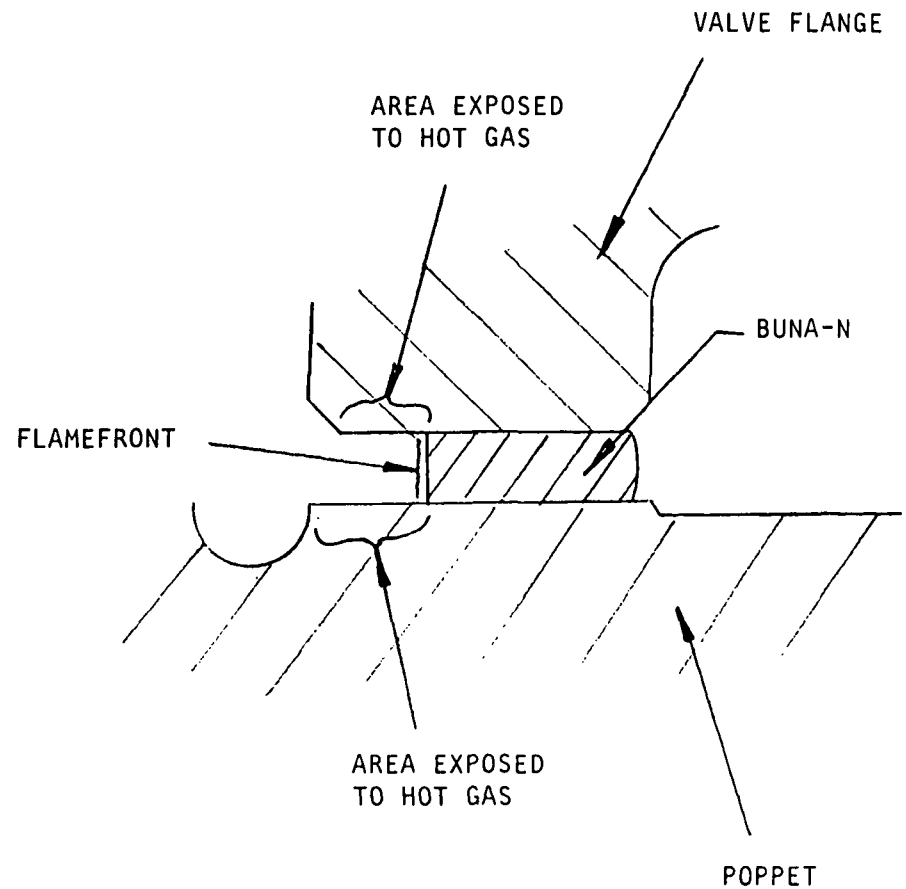

FIGURE 8

Rockwell International
Rocketdyne Division

PSEUDO-3D THERMAL MODEL OF THE OPB ASI CHECK VALVE

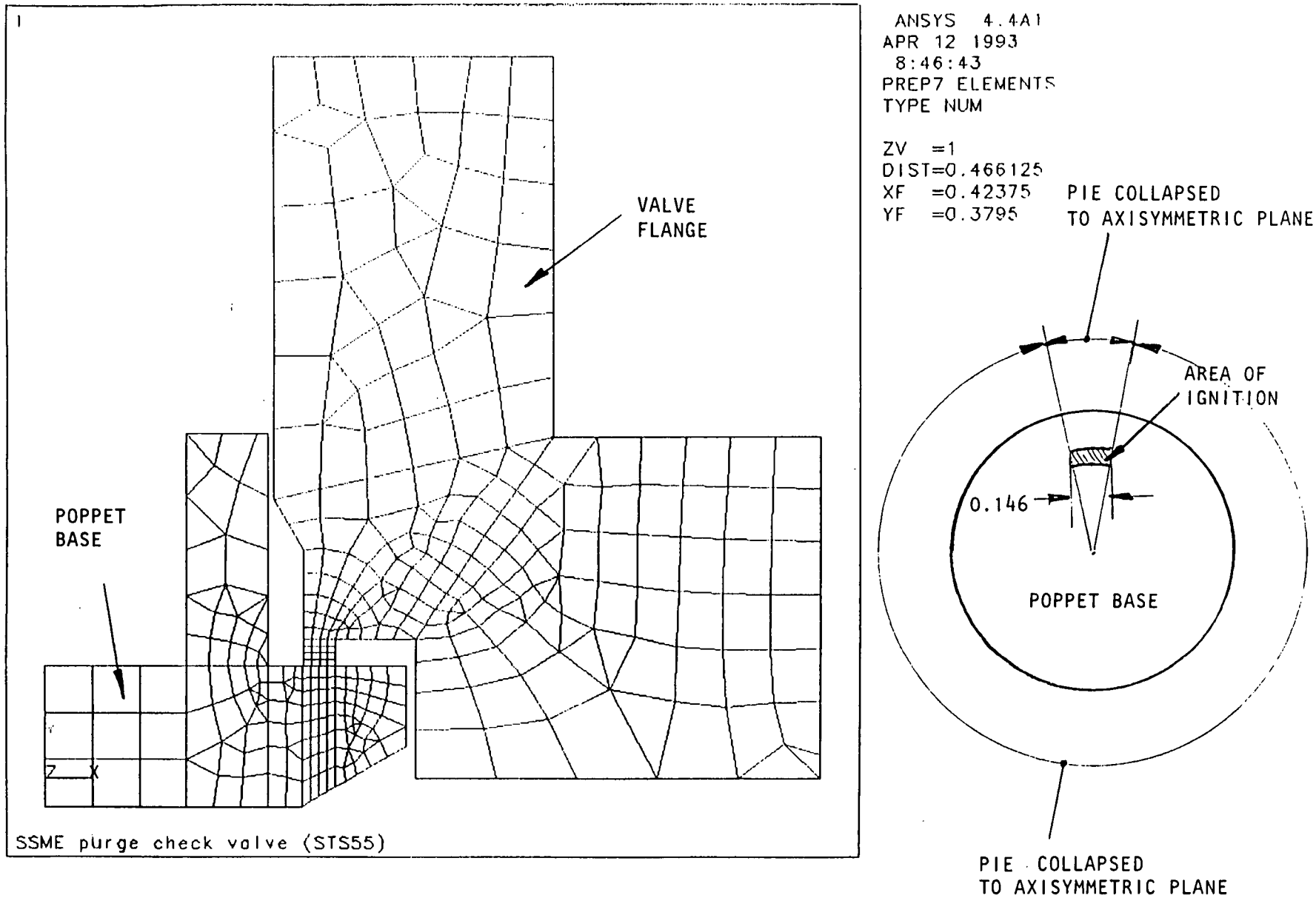

FIGURE 9

STS55 OPB purge check valve anomaly
Maximum surface temperature vs Burn rate

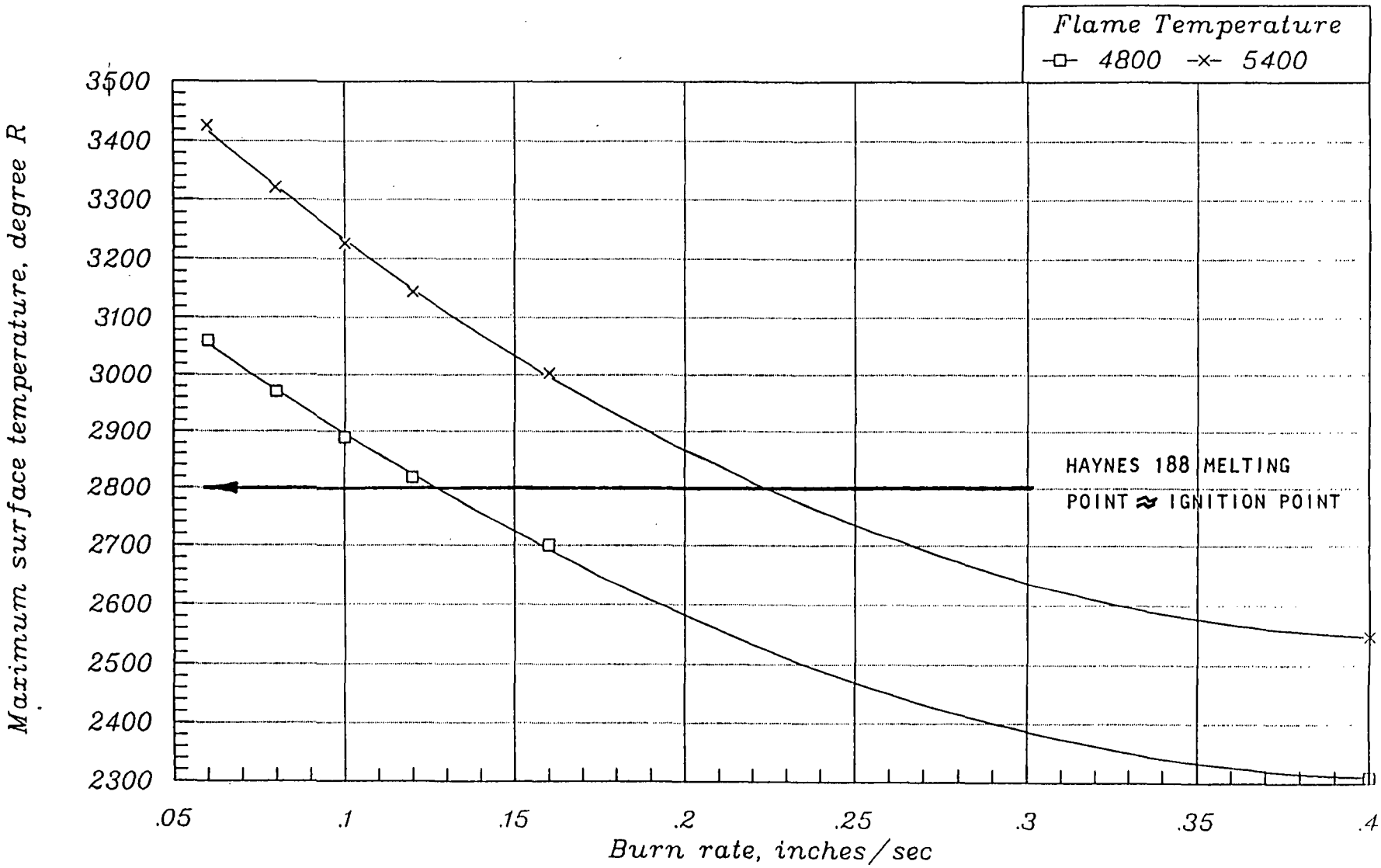

FIGURE 10

OPB ASI CHECK VALVE METAL IGNITION

FIGURE 11a

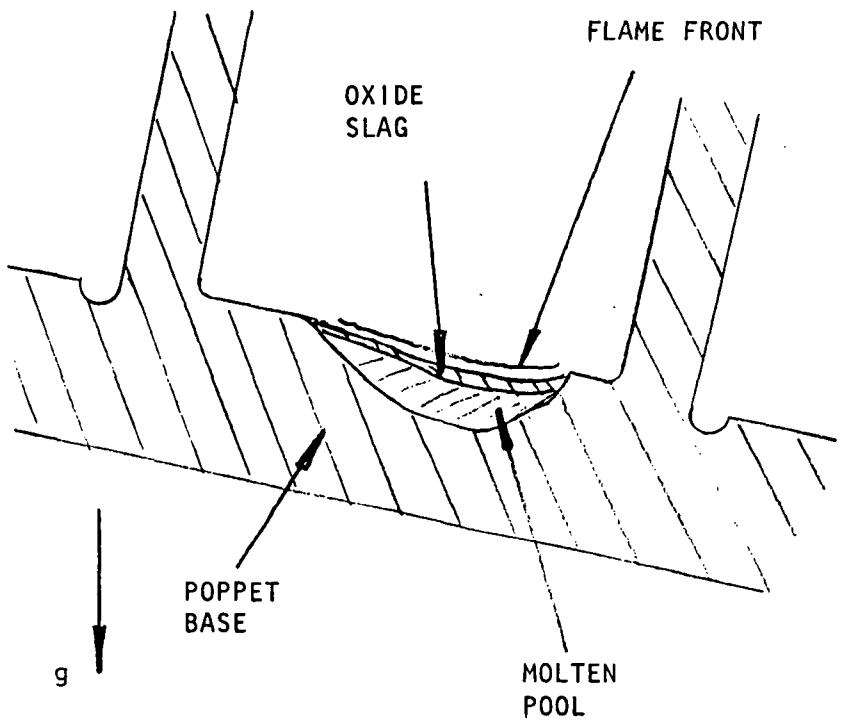

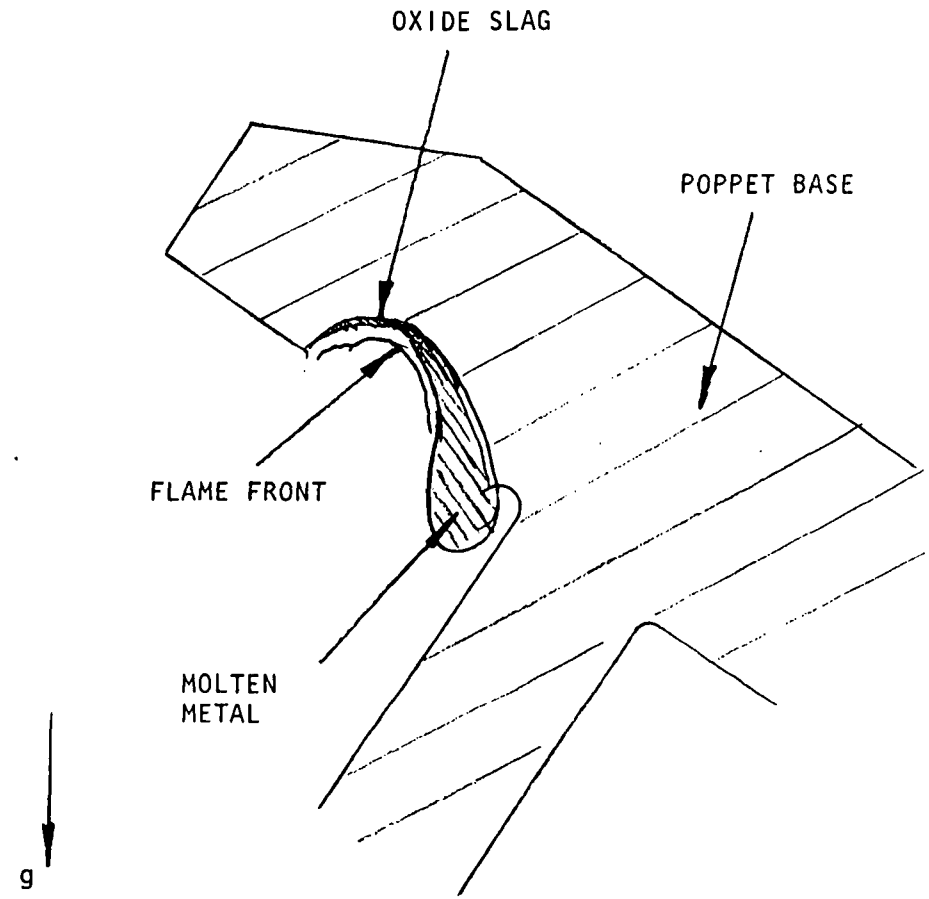

FIGURE 11b

FIGURE 11

Rockwell International
Rocketdyne Division

HAYNES 188 OXIDATION

METAL	MELTING POINT °R	BOILING POINT °R	METAL OXIDE	MELTING POINT °R	BOILING POINT °R
NICKEL (22%)	3106	5405	NICKEL OXIDE (NIO)	4014	---
CHROMIUM (22%)	3281	4946	CHROMIUM OXIDE (CR_2O_3)	4878	5940
COBALT (37.1%)	3155	5711	COBALT OXIDE (CoO)	3740	---
TUNGSTEN (14.5%)	6557	11,111	TUNGSTEN OXIDE (WO_3)	3142	3780

FIGURE 12

2883C

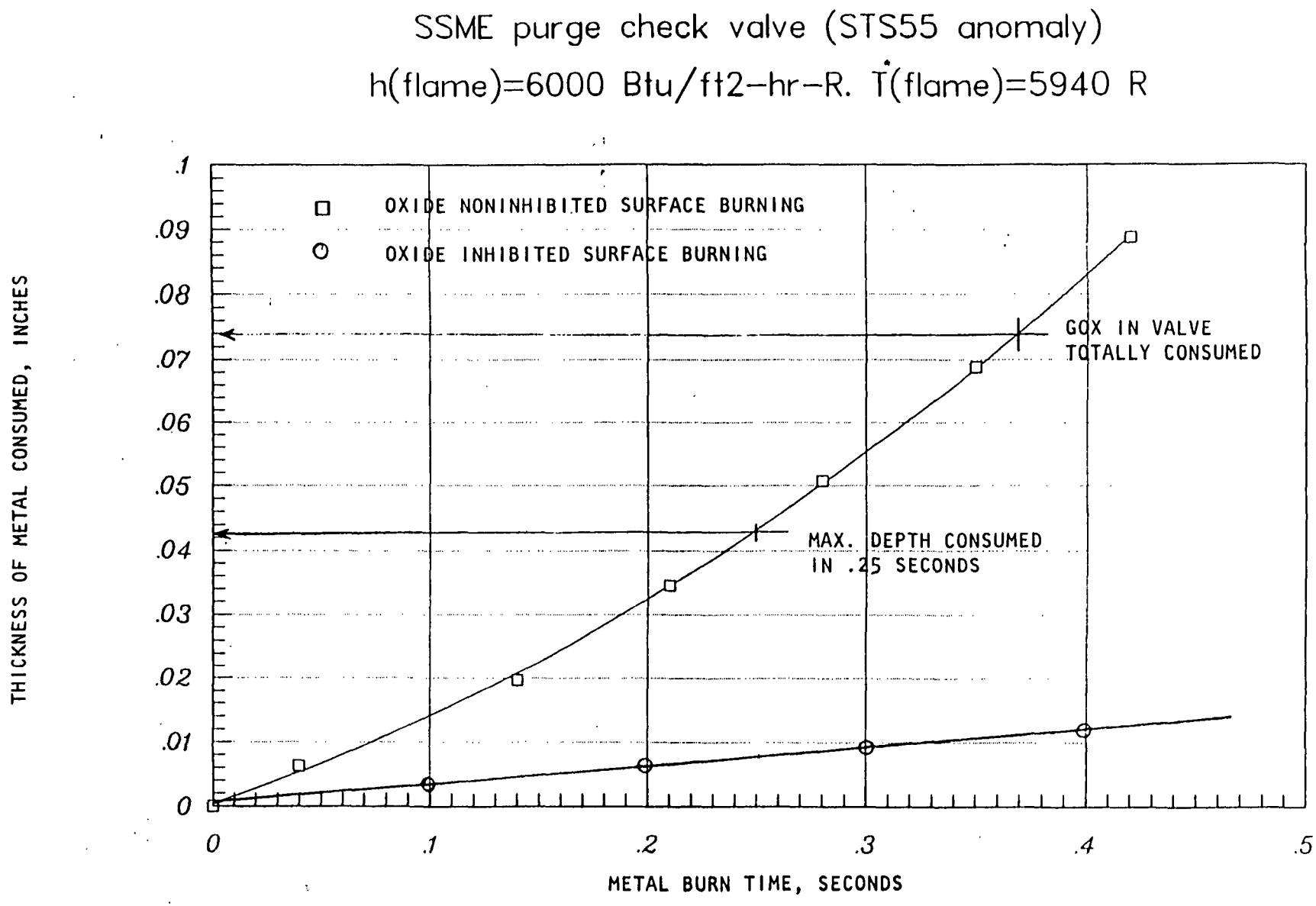
SSME purge check valve (STS55 anomaly)
h(flame)=6000 Btu/ft2-hr-R. T(flame)=5940 R
OXIDE NONINHIBITED SURFACE BURNING
OXIDE INHIBITED SURFACE BURNING
GOX IN VALVE
TOTALLY CONSUMED
MAX. DEPTH CONSUMED
IN .25 SECONDS
THICKNESS OF METAL CONSUMED, INCHES
METAL BURN TIME, SECONDS
0
.01
.02
.03
.04
.05
.06
.07
.08
.09
.1
0
.1
.2
.3
.4
.5

FIGURE 13

Section 8.0

NASA Level-I and STS-56 L-2 Closeout Briefing

STS-55 PAD ABORT
LEVEL-I CLOSEOUT BRIEFING

The results of the team investigation were presented by Byron Wood to the NASA Level I PRCB via telecon on 3/31/93 and to the Mission Management Team (STS-56 L-2 Day) on 4/4/93 at KSC. The investigation findings and rationale to fly STS-56 (OV103) were included in the presentation.

STS-55

PAD ABORT INVESTIGATION

STS-56
OV103 L-2
CLOSEOUT
04/04/93

Rockwell International
Rocketdyne Division

SSME-55PAI\31S1-A

1

STS-55 ON-PAD ABORT

3/22/93

- **PROBLEM**
  - ME-3 (ENGINE 2011) OXIDIZER PREBURNER (OPB) PURGE PRESSURE EXCEEDED 50 PSIA REDLINE LIMIT DURING START SEQUENCE
- **PAD ABORT SEQUENCE**
  - ME-3 SHUTDOWN WAS INITIATED BY MAIN ENGINE CONTROLLER AT 1.5 SECONDS
  - ME-2 AND ME-1 RECEIVED SHUTDOWN COMMANDS FROM ORBITER GENERAL PURPOSE COMPUTERS
  - STAGGERED SHUTDOWNS ACCOMPLISHED PER NORMAL PAD ABORT SOFTWARE LOGIC
- **NO ENGINE DAMAGE**
- **NO POST SHUTDOWN HYDROGEN LEAK OR FIRES**

ENGINE PERFORMANCE NOMINAL

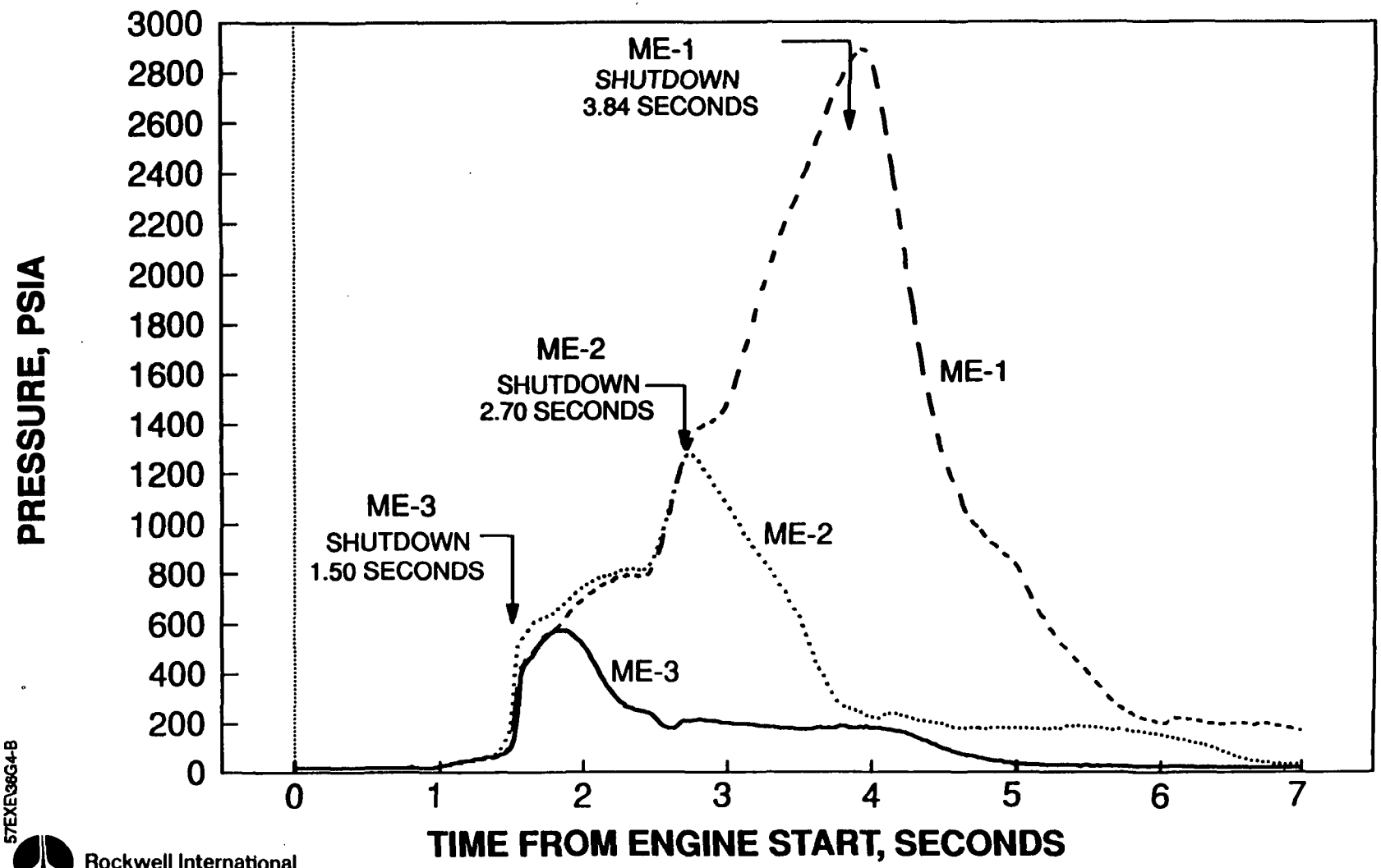

57EXE\38G4-B

Rockwell International
Rocketdyne Division

4.1.2

ME-3 PURGE PRESSURE REDLINE

EXCEEDED LIMIT AT 1.44 SEC

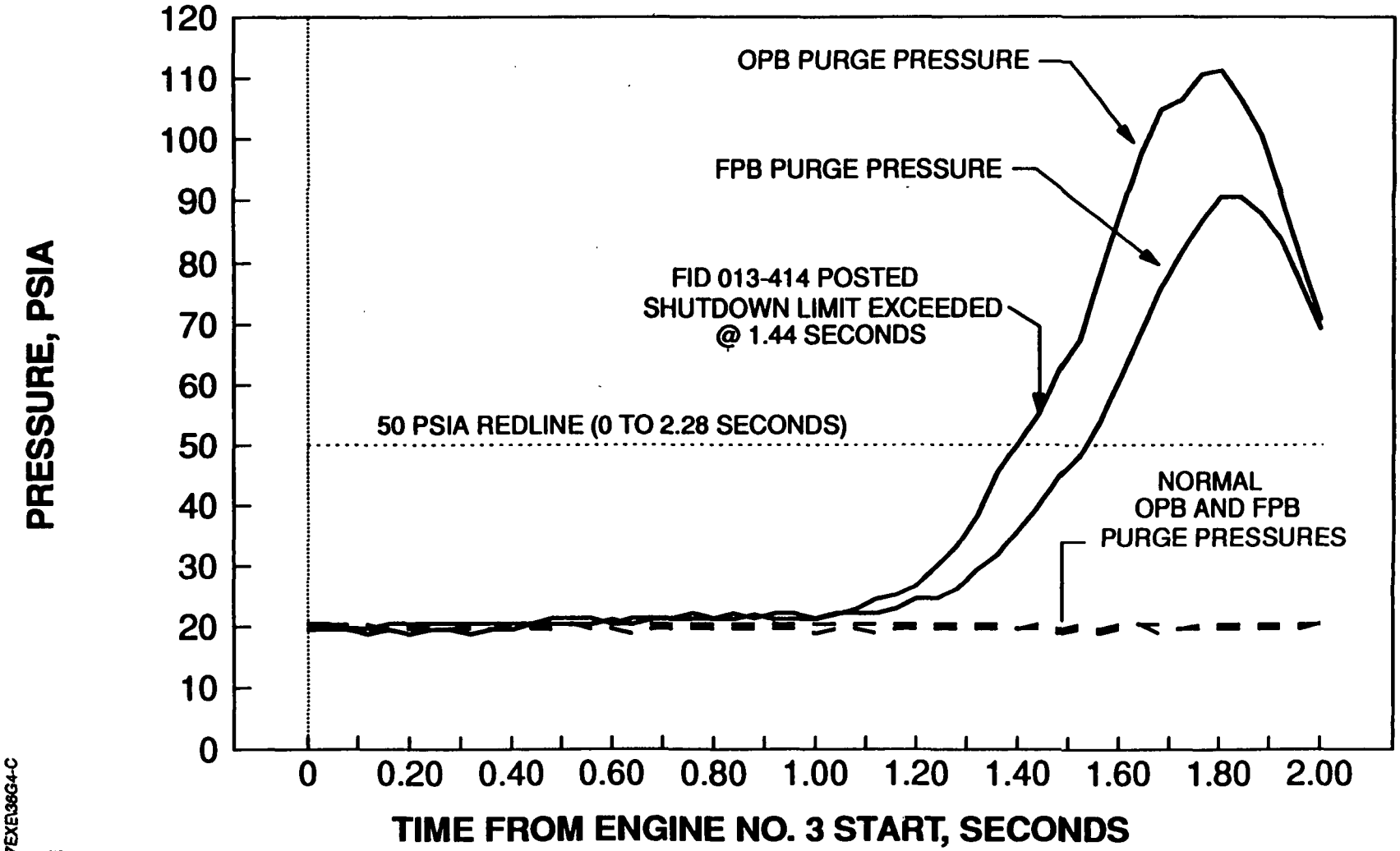

8-6

a-2

57EXE36G4-C

Rockwell International
Rocketdyne Division

4.1.3

PURGE CHECK VALVE SYSTEM

PRESTART OPERATION

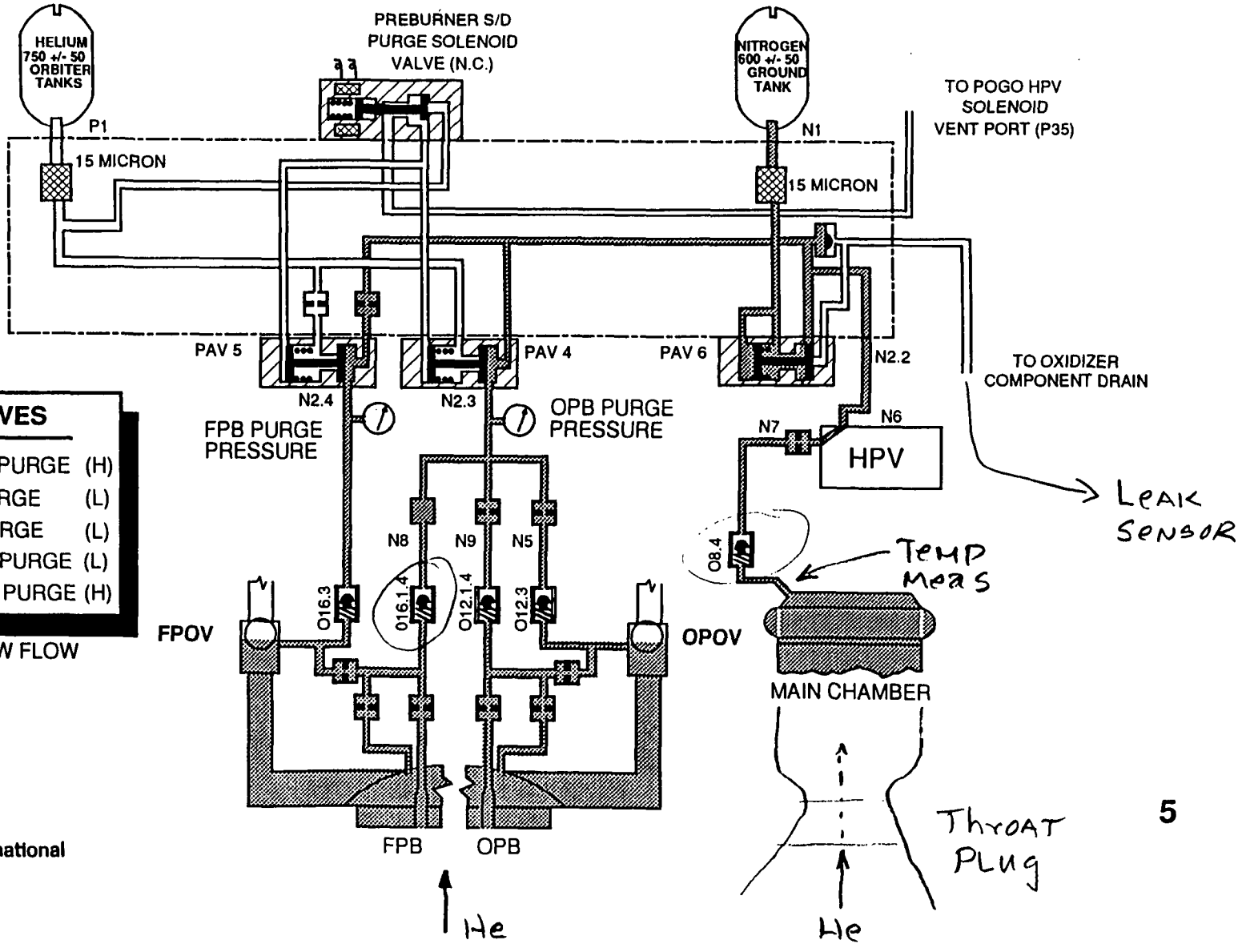

CHECK VALVES		
O16.3	FPB DOME PURGE	(H)
O16.1.4	FPB ASI PURGE	(L)
O12.1.4	OPB ASI PURGE	(L)
O12.3	OPB DOME PURGE	(L)
O8.4	MCC DOME PURGE	(H)

(H) HIGH FLOW (L) LOW FLOW

PURGPRE1.DRW

Rockwell International
Rocketdyne Division

PURGE CHECK VALVE SYSTEM

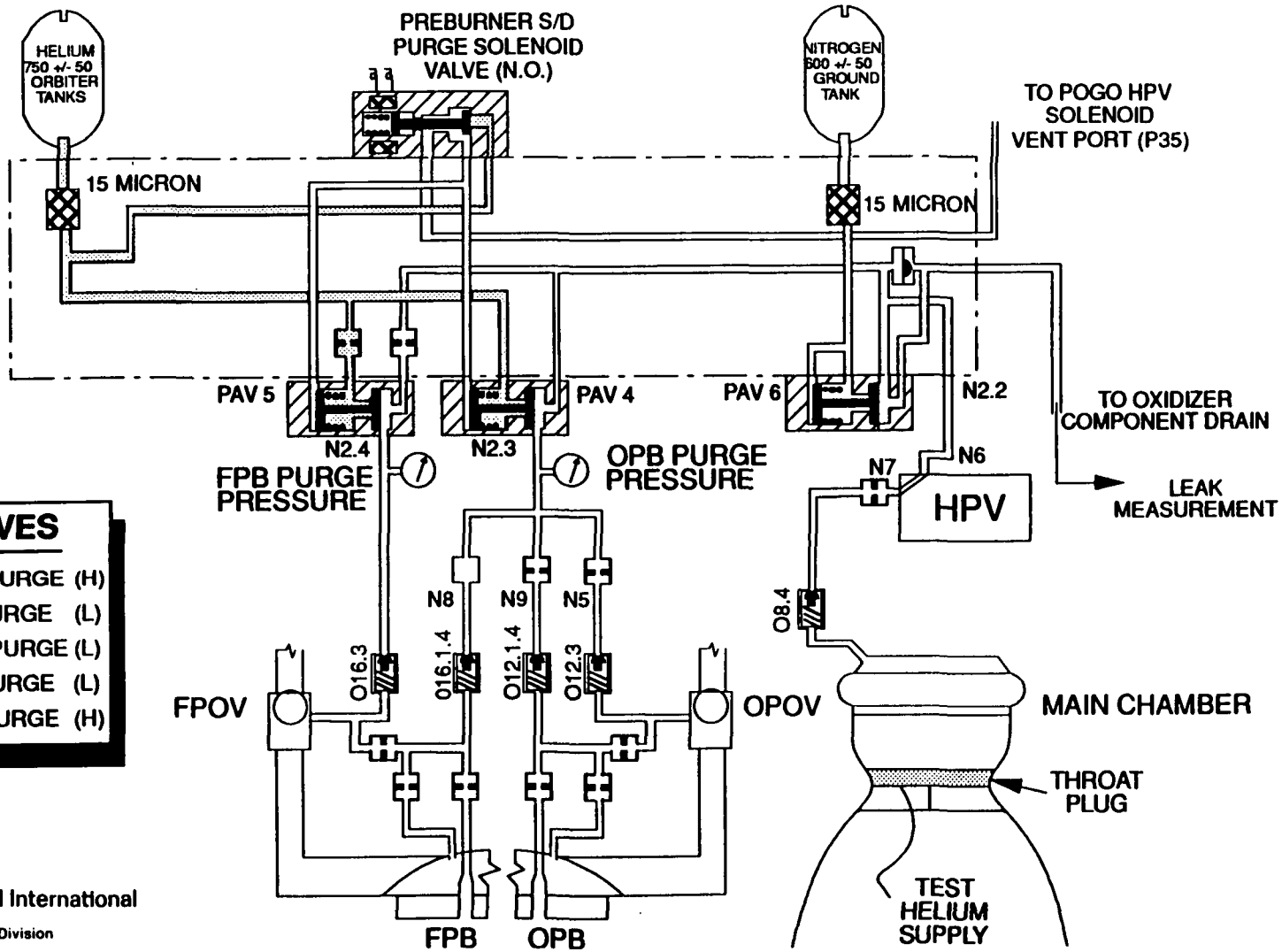

CHECK VALVES

O16.3	FPB DOME PURGE	(H)
O16.1.4	FPB ASI PURGE	(L)
O12.3	OPB DOME PURGE	(L)
O12.1.4	OPB ASI PURGE	(L)
O8.4	MCC DOME PURGE	(H)

57EXE36G4-P

Rockwell International
Rocketdyne Division

4.1.5

REDLINE REQUIREMENTS - FMEA/CIL

LRU	PART NAME	FAILURE MODES	PHASE					CRIT.
			P	S	M	C	D	
C113	MAIN OXID. DOME PURGE CHECK VALVE	1. FAILS TO OPEN	X					1
		2. LEAKS		X	X	X	X	3
C116	FPB ASI PURGE CHECK VALVES	1. FAILS TO OPEN	X					1
						X		3
		2. LEAKS		X	X	X		1R
							X	3
C117	OPB ASI PURGE CHECK VALVES	1. FAILS TO OPEN	X			X		3
		2. LEAKS		X	X	X	X	3
C111 & C112	FPB & OPB PURGE CHECK VALVES	1. FAILS TO OPEN	X			X		3
		2. LEAKS		X	X	X	X	3

57EXE\36G4-E

FUEL PREBURNER PURGE SYSTEM
ASI PURGE CHECK VALVE FAILS TO CLOSE

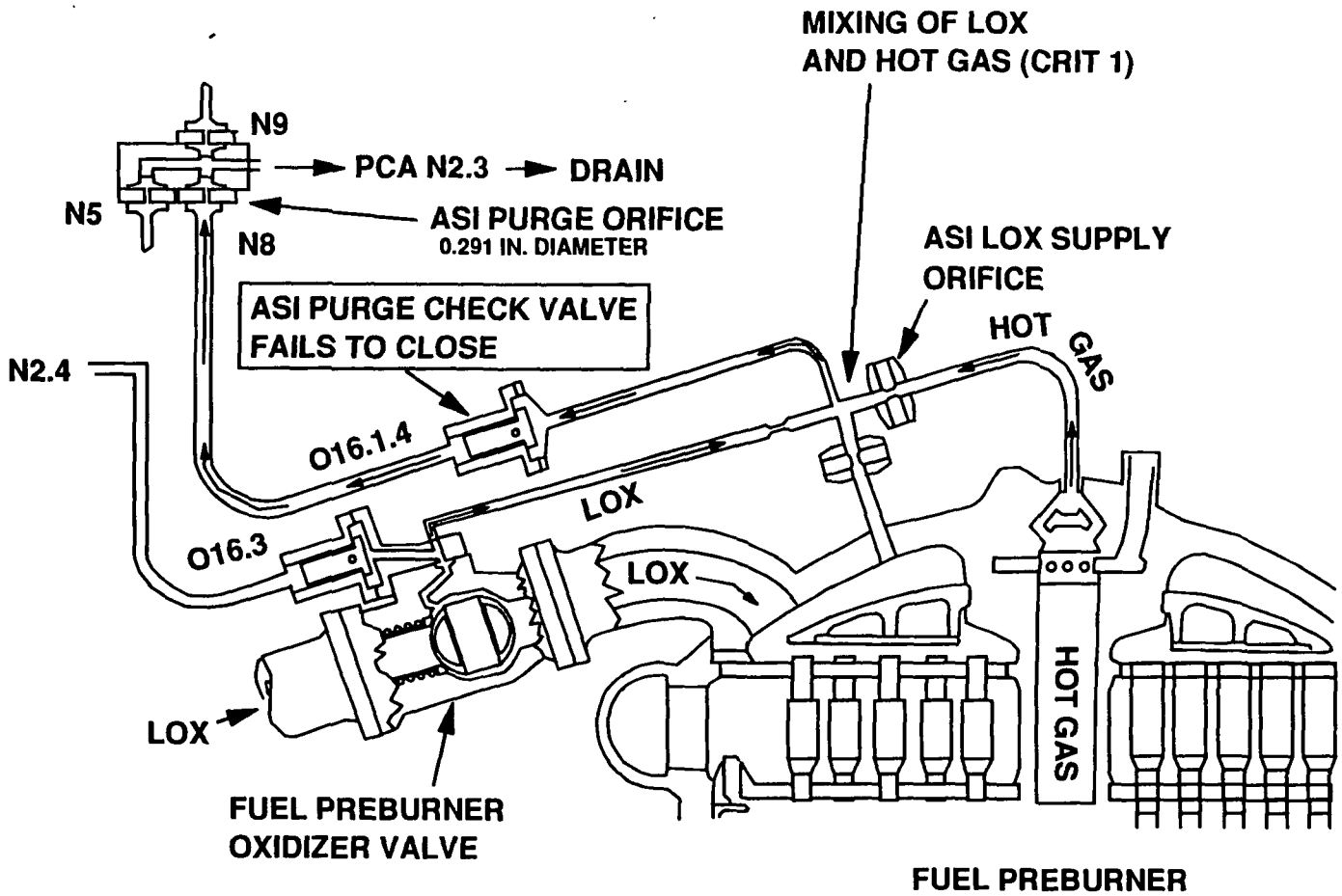

X:\FLDRWGS\FPB1.DRW

Rockwell International
Rocketdyne Division

OXIDIZER PREBURNER PURGE SYSTEM

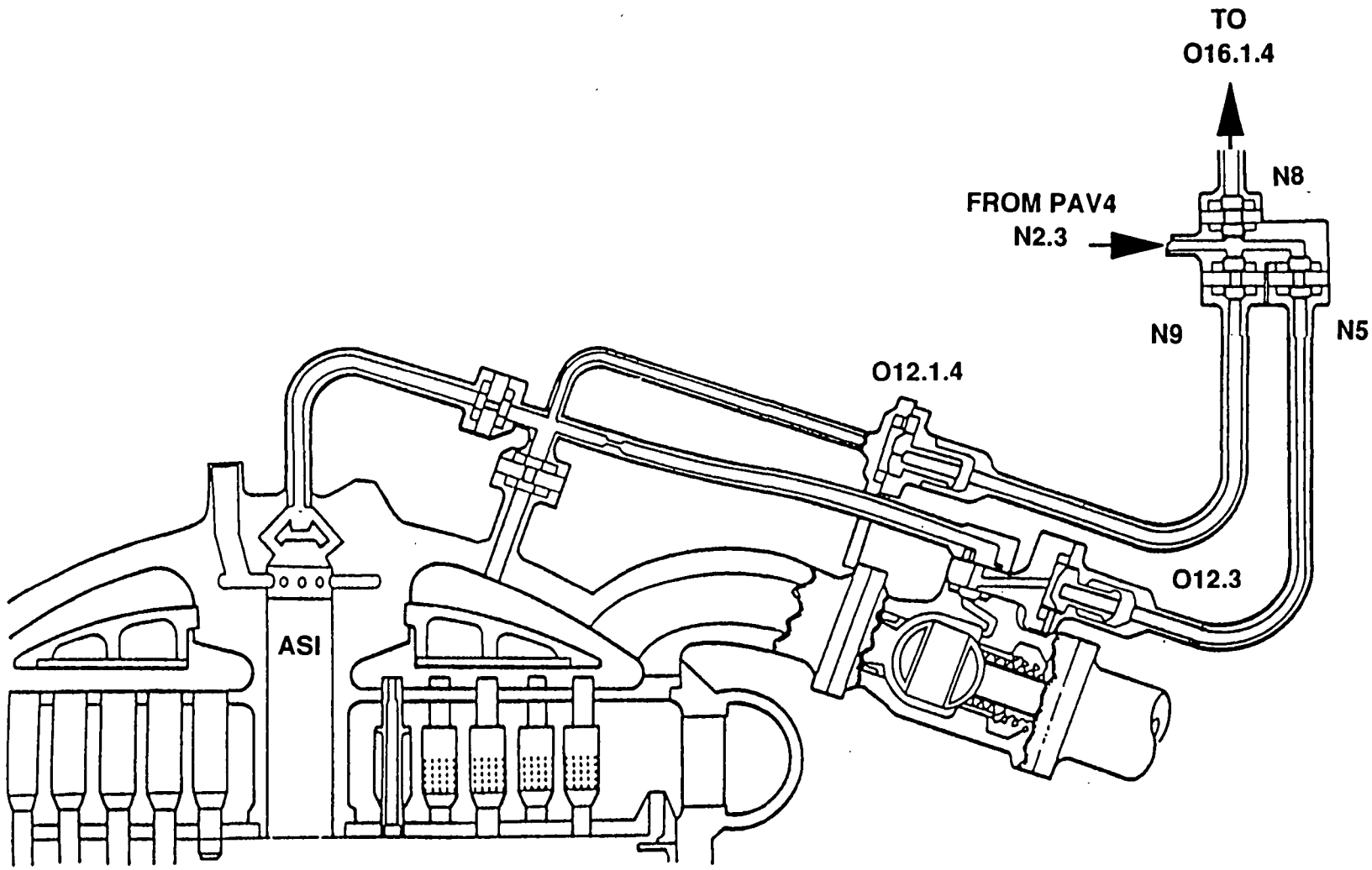

OXIDIZER PREBURNER

Rockwell International
Rocketdyne Division

BU-1

2011 LEAK CKECKS -25 PSIG

→ same order as chart 5

	COMBINED LEAK CHK	N2.4 016.3 FPB PURGE	N8 016.1.4 FPB ASI	N9 012.1.4 OPB ASI	N5 012.3 OPB PURGE	N7 08.4 MAIN DOME	TOTAL ISO'S
NEW DELIVERY	--	0.9	2.4	0	0	0.8	4.1
1ST CHECK	14.5	0.9	0.5	0	5.9	2.7	10.0
CYCLE GN2 5 MINS - THROAT PLUG INSTALLED 50 MINUTES				580 @ 11 PSIG			
2ND CHECK @ 11 PSIG	790	0	0.4	468	2.2	0	471
@ 25 PSIG	–	0	0.7	581	0	3.2	3.9/585
OXID SHAFT SEALS	ZERO AT 25 PSIG			.0004 poppet seat gap			
CANOGA PARK	10 PSIG 25 PSIG			243 480	1.4 3.3		

8-12 special procedure

55PAN31S1-F

Rockwell International
Rocketdyne Division

Check vlv History BU-2
FLTS BU-3

Oxidizer Preburner ASI Purge Check Valve

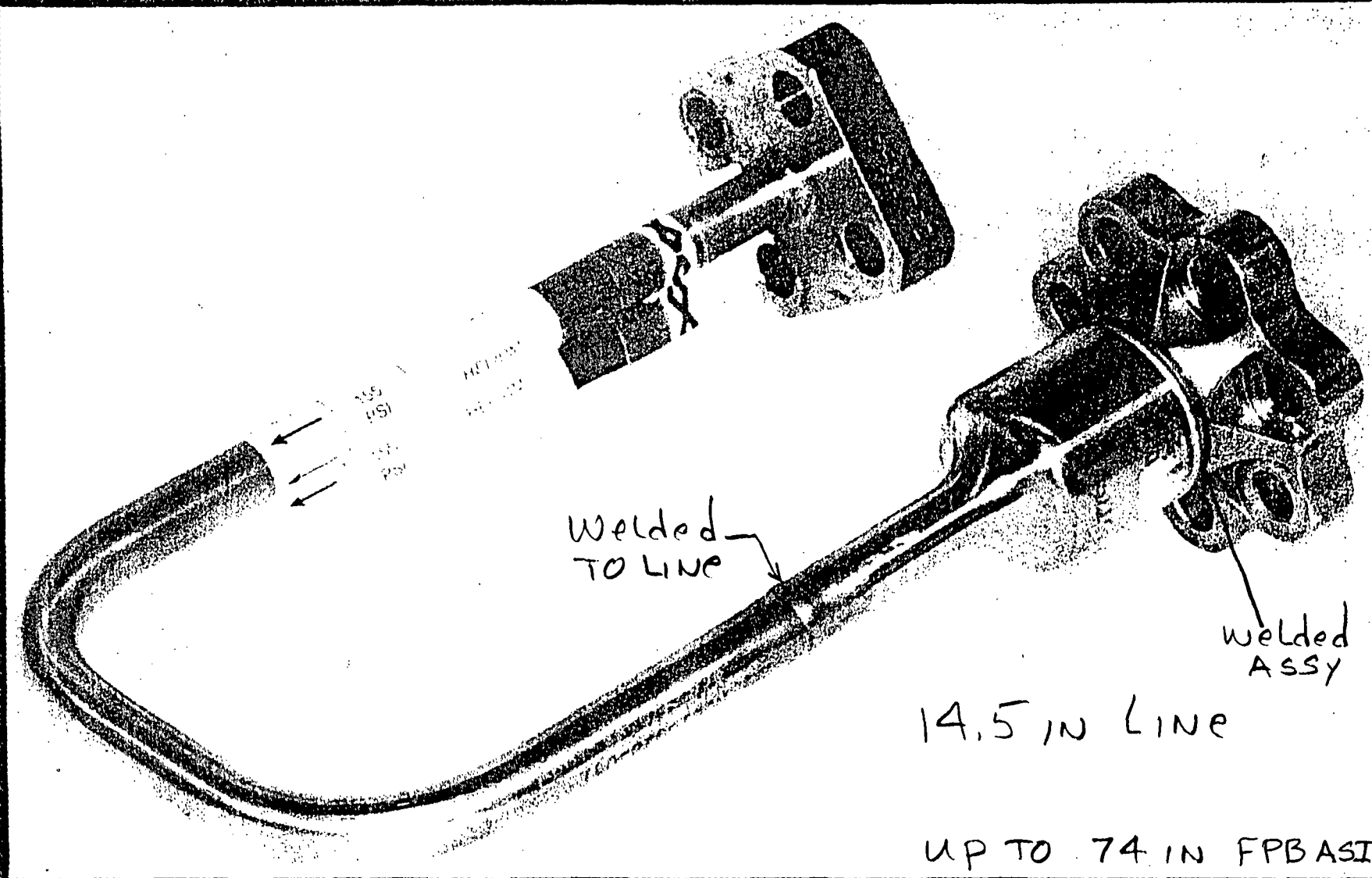

Rockwell International
Rocketdyne Division

SC93c-4-158
(SM14-3/26/93-C1003)M742

9

OPB ASI Check Valve Poppet

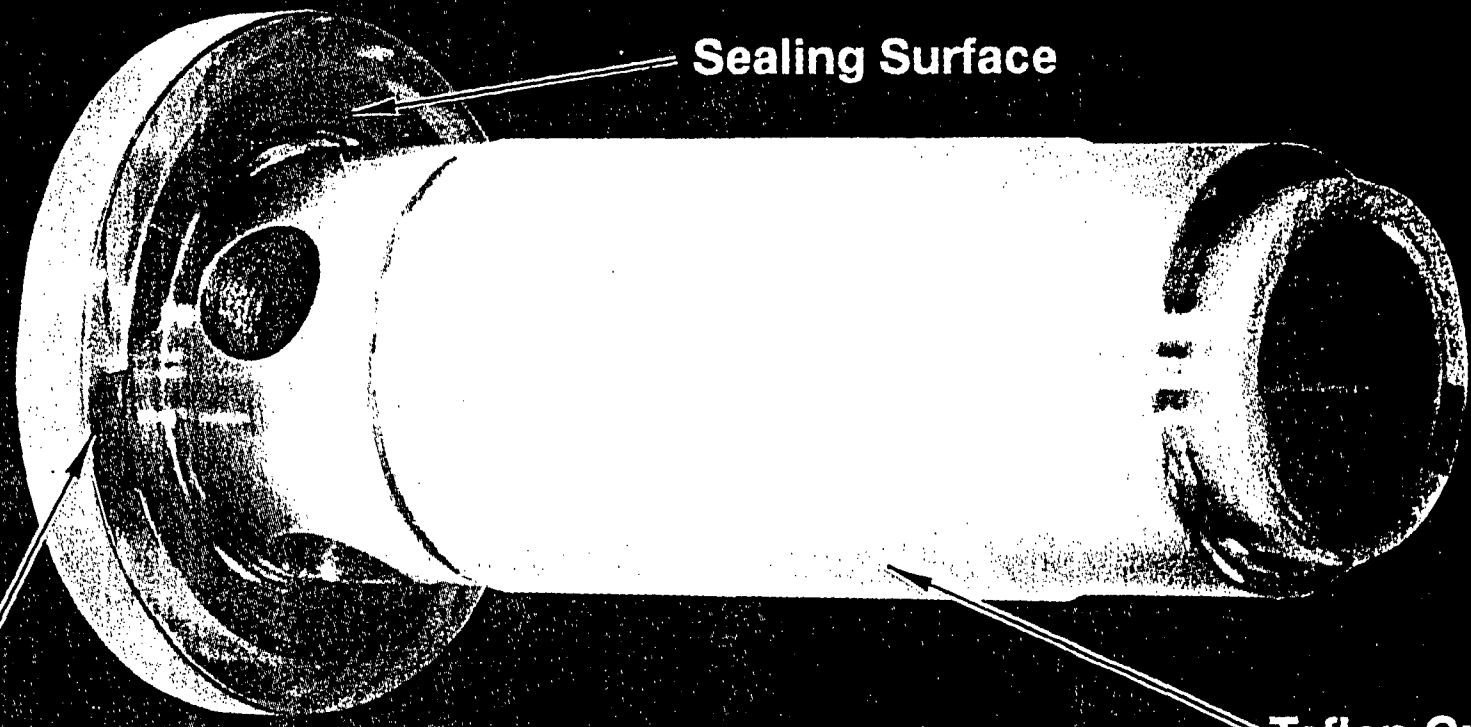

Rubber Contaminant
0.146 x 0.046 x 0.018

Rockwell International
Rocketdyne Division

SC93c-4-155
M742

10

ENGINE 2011 OXIDIZER CHECK VALVES

PART NAME	STARTS/SEC	BUILD DATE	NEW BUILD LEAK CHECK @25 +/-1 (<10 SCIM)
FPB DOME PRG. C/V	20/6453	2-23-84	0.9
FPB ASI PRG C/V	26/10153	4-11-80	2.4
OPB ASI PRG C/V	12/4761	5-25-85	0
OPB DOME PRG C/V	12/4761	1-11-83	0
MCC DOME PRG C/V	20/6453	2-15-84	0.8

55PAN31S1-E

ENGINE 2011 CHECK VALVE HISTORY

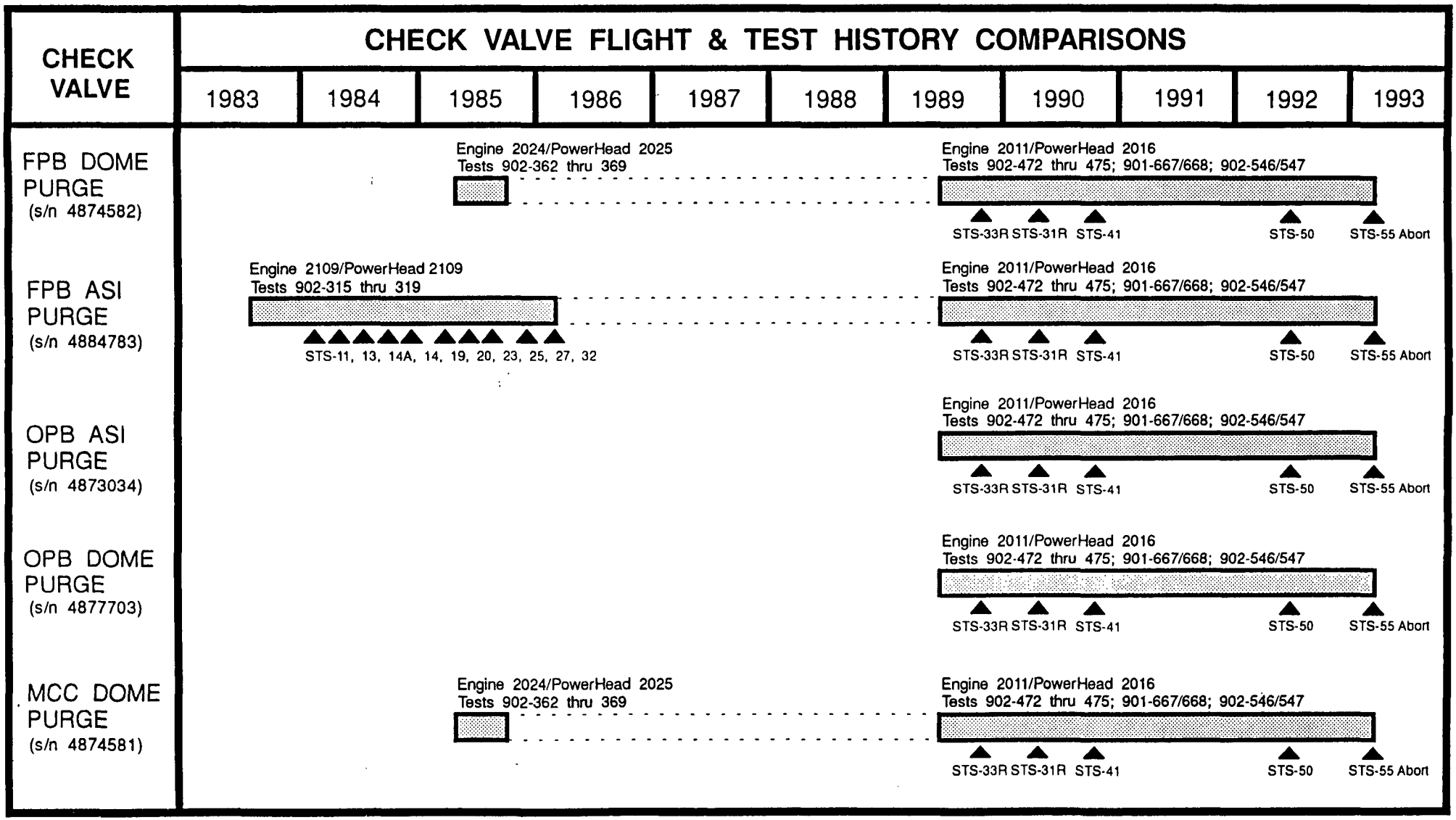

(E:\STS55\55CHKHST.PRE)

OPB ASI CHECK VALVE
BLACK PARTICLE CONTAMINATION

BUNA-N "Nitrile" O-RING

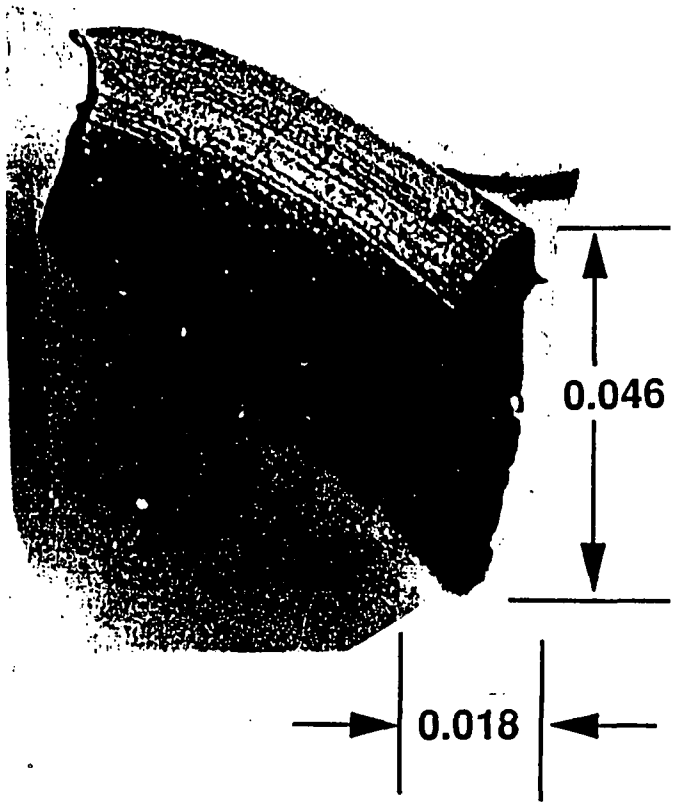

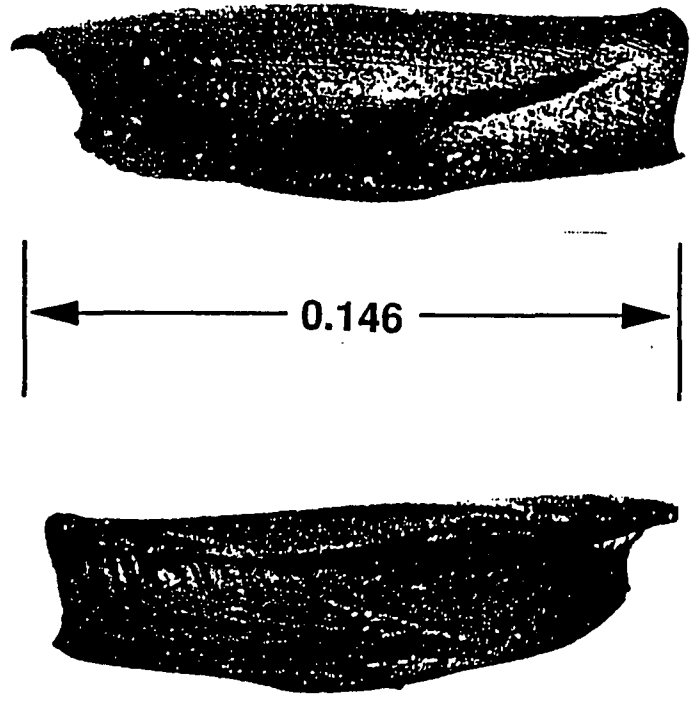

Other contam BU-7
Dimensions BU-8
Flush Fixt BU-9

Rockwell International
Rocketdyne Division

STS-55 ABORT

CHECK VALVE CONTAMINANT POTENTIAL SCENARIO

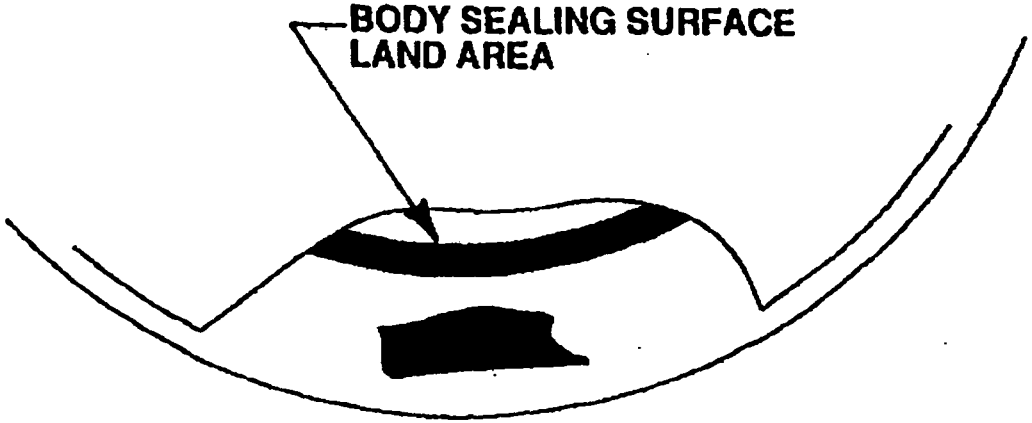

PROJECTION OF VIEW A
(PORTION OF POPPET REMOVED FOR ILLUSTRATION PURPOSES)

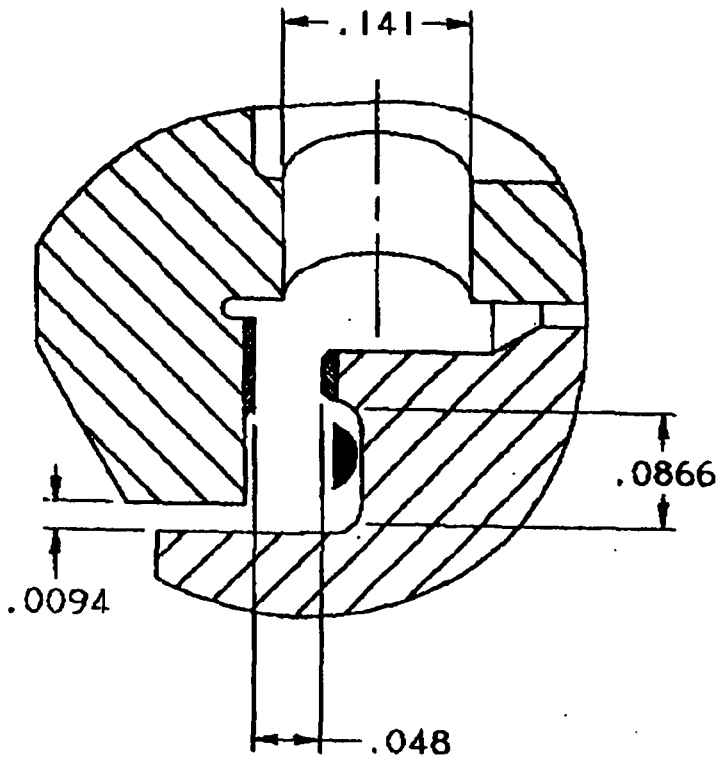

VIEW A

Rockwell International
Rocketdyne Division

AVIONICS & CONTROLS.B
7 APRIL 1993

STS-55 ABORT

CHECK VALVE CONTAMINANT POTENTIAL SCENARIO

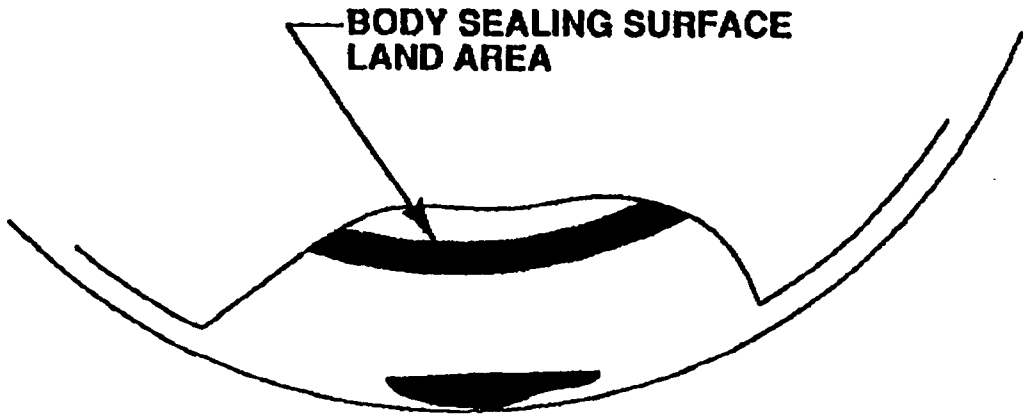

PROJECTION OF VIEW A
(PORTION OF POPPET REMOVED FOR ILLUSTRATION PURPOSES)

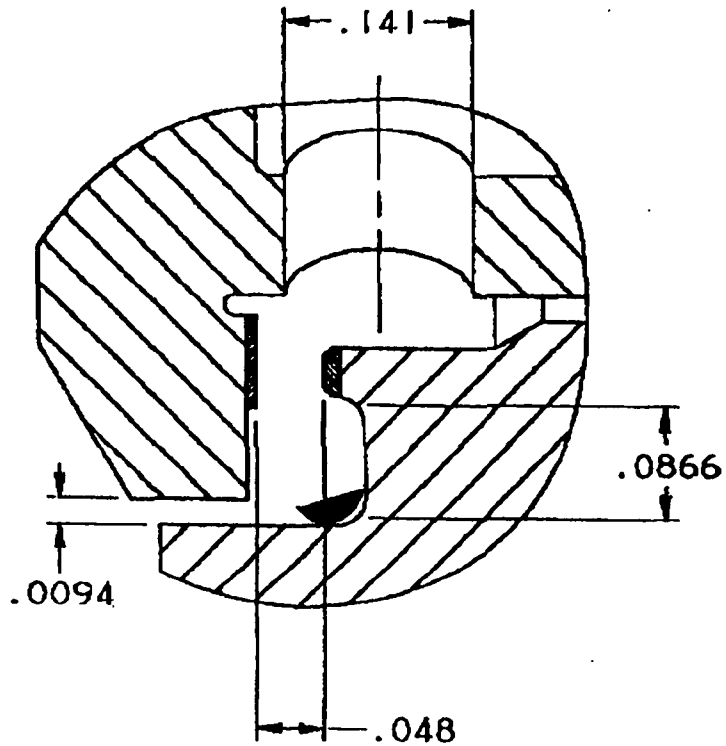

VIEW A

Rockwell International
Rocketdyne Division

AVIONICS & CONTROLS C
7 APRIL 1993

STS-55 ABORT

CHECK VALVE CONTAMINANT POTENTIAL SCENARIO

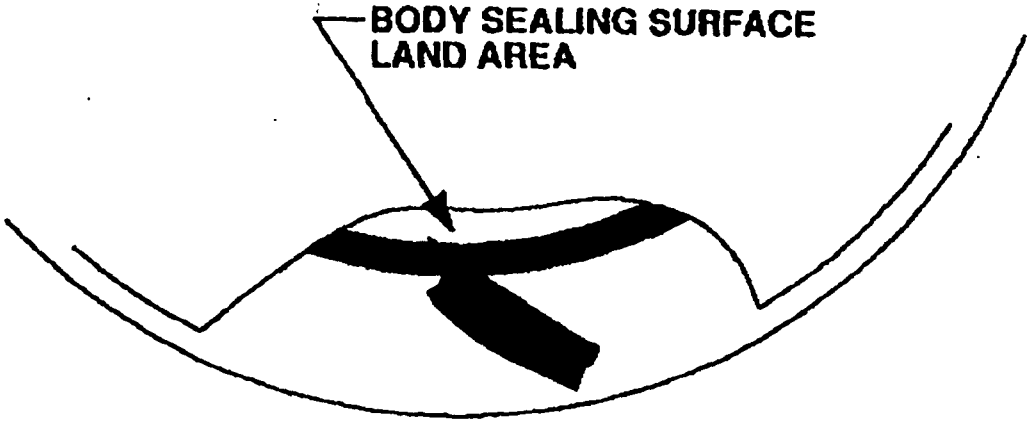

PROJECTION OF VIEW A
(PORTION OF POPPET REMOVED FOR ILLUSTRATION PURPOSES)

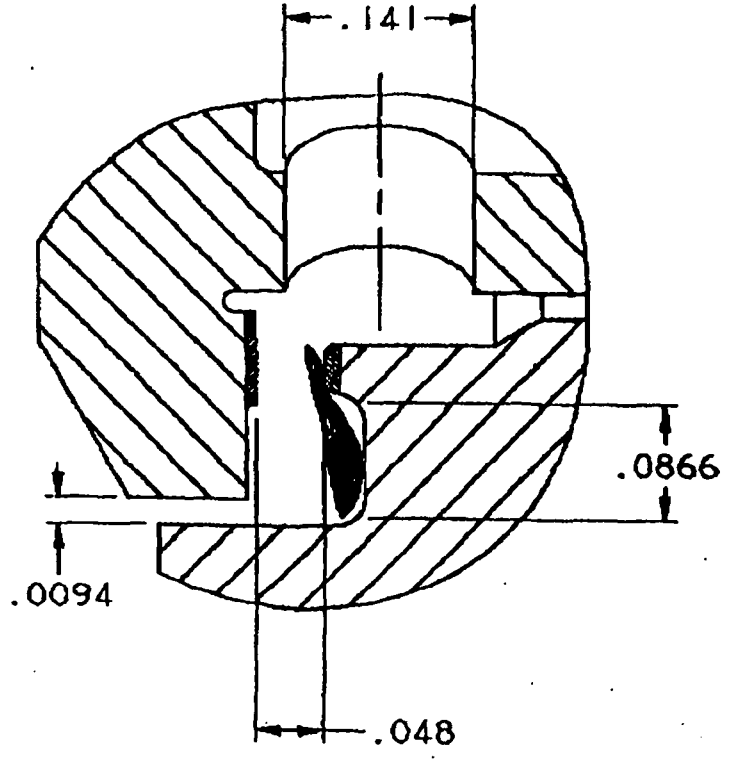

VIEW A

Rockwell International
Rocketdyne Division

AVIONICS & CONTROLS E
7 APRIL 1993

OPB ASI CHECK VALVE CONTAMINATION MATERIAL SAMPLES

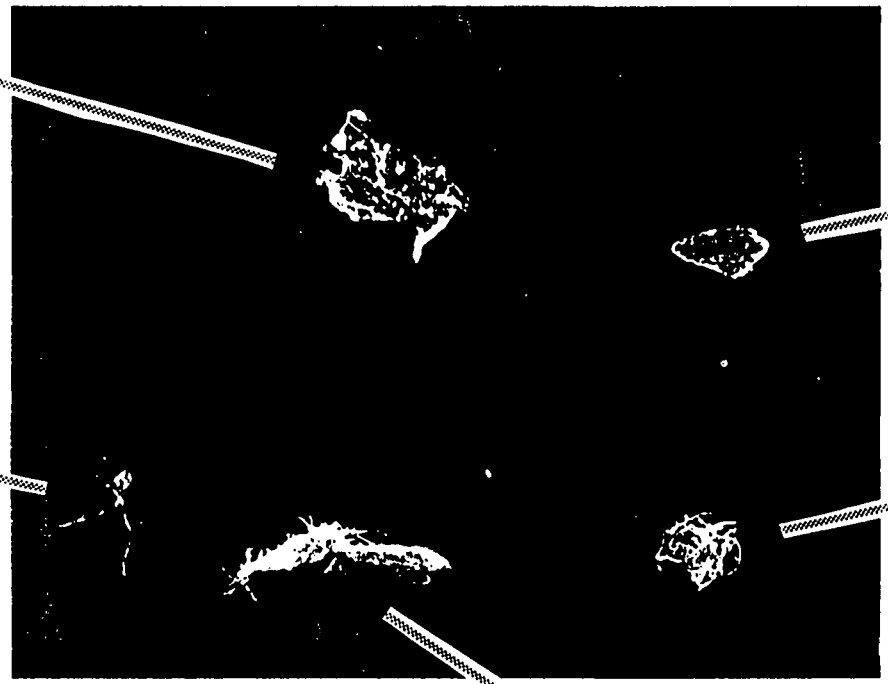

CONTAMINATION ANALYSIS

DESCRIPTION	MAXIMUM LENGTH	MAXIMUM WIDTH	MAXIMUM THICKNESS
SAMPLE A (NYLON W/COTTON FIBER)	0.045	0.011	0.002
SAMPLE B (COTTON)	0.104	0.015	------
SAMPLE C (COTTON)	0.041	0.038	------
SAMPLE D (NYLON)	0.045	0.025	0.005
SAMPLE E (NYLON)	0.077	0.040	0.004
BLACK PARTICLE (NITRILE BUNA N)	0.146	0.046	0.018
LOX TAPE CONTAMINANT (USED TO HOLD POPPET IN REMOVAL PROCESS)	0.096	0.023	------

VALVE BUILD FLUSHING FIXTURE

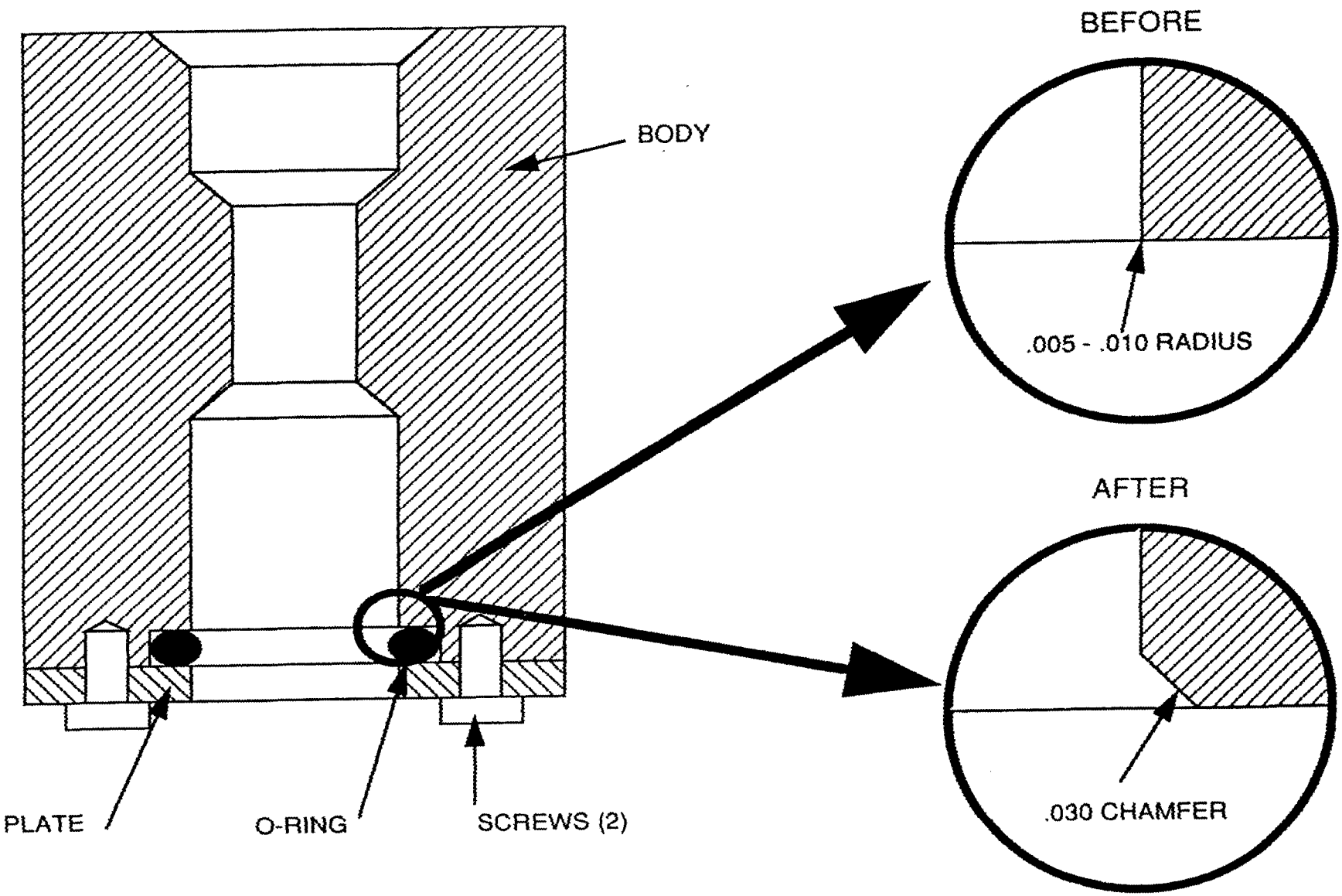

PURGE CHECK VALVE

CUTAWAY

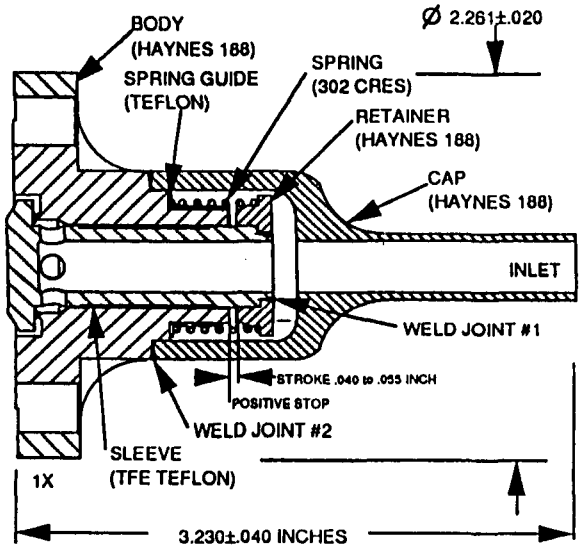

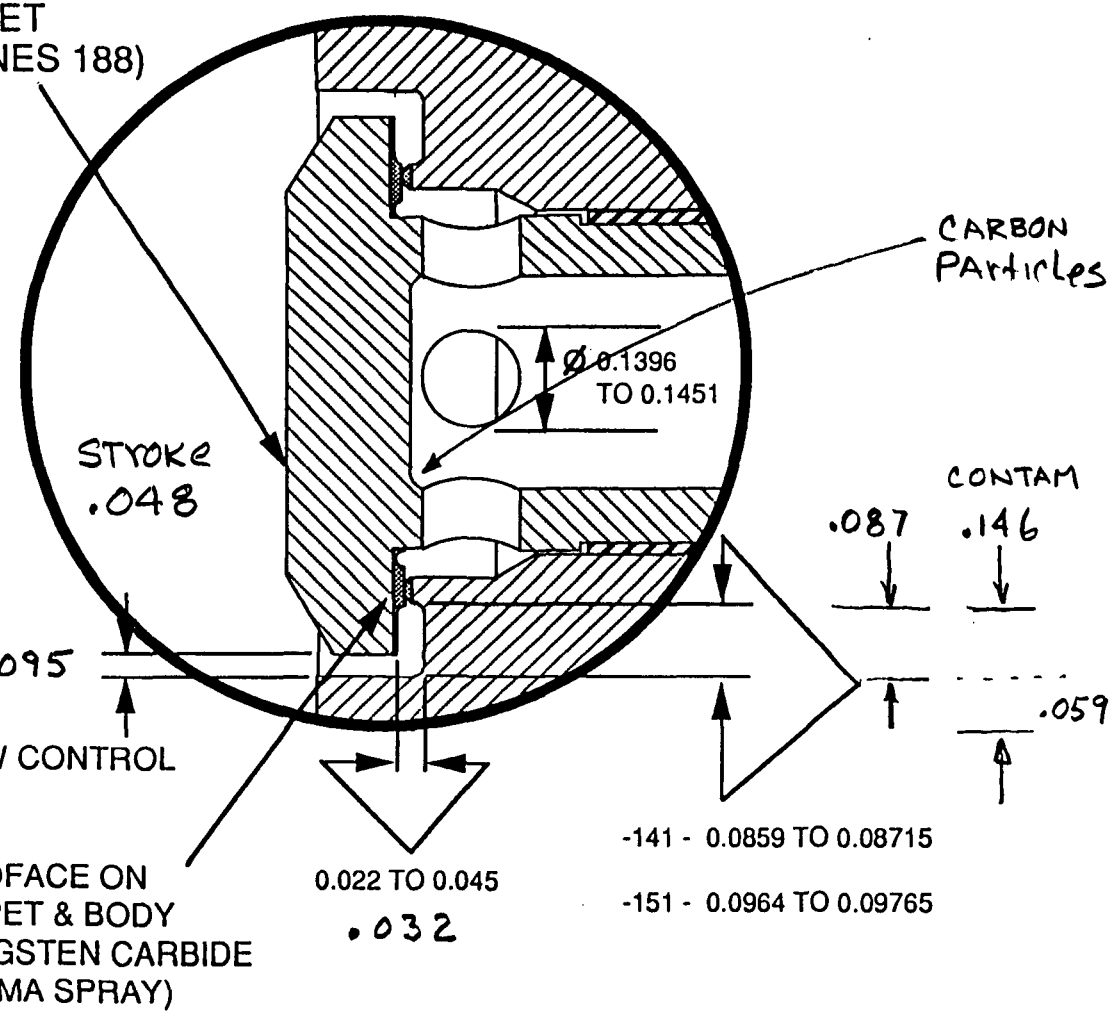

FLOW CONTROL GAP
-141 LOW FLOW 0.00915 TO 0.00965 -151 HIGH FLOW 0.01965 TO 0.02015

Rockwell International
Rocketdyne Division

Area vs stroke BU-4
FLOW " " -5
Press " " -6

PURGE CHECK VALVE

FLOW CHARACTERISTICS

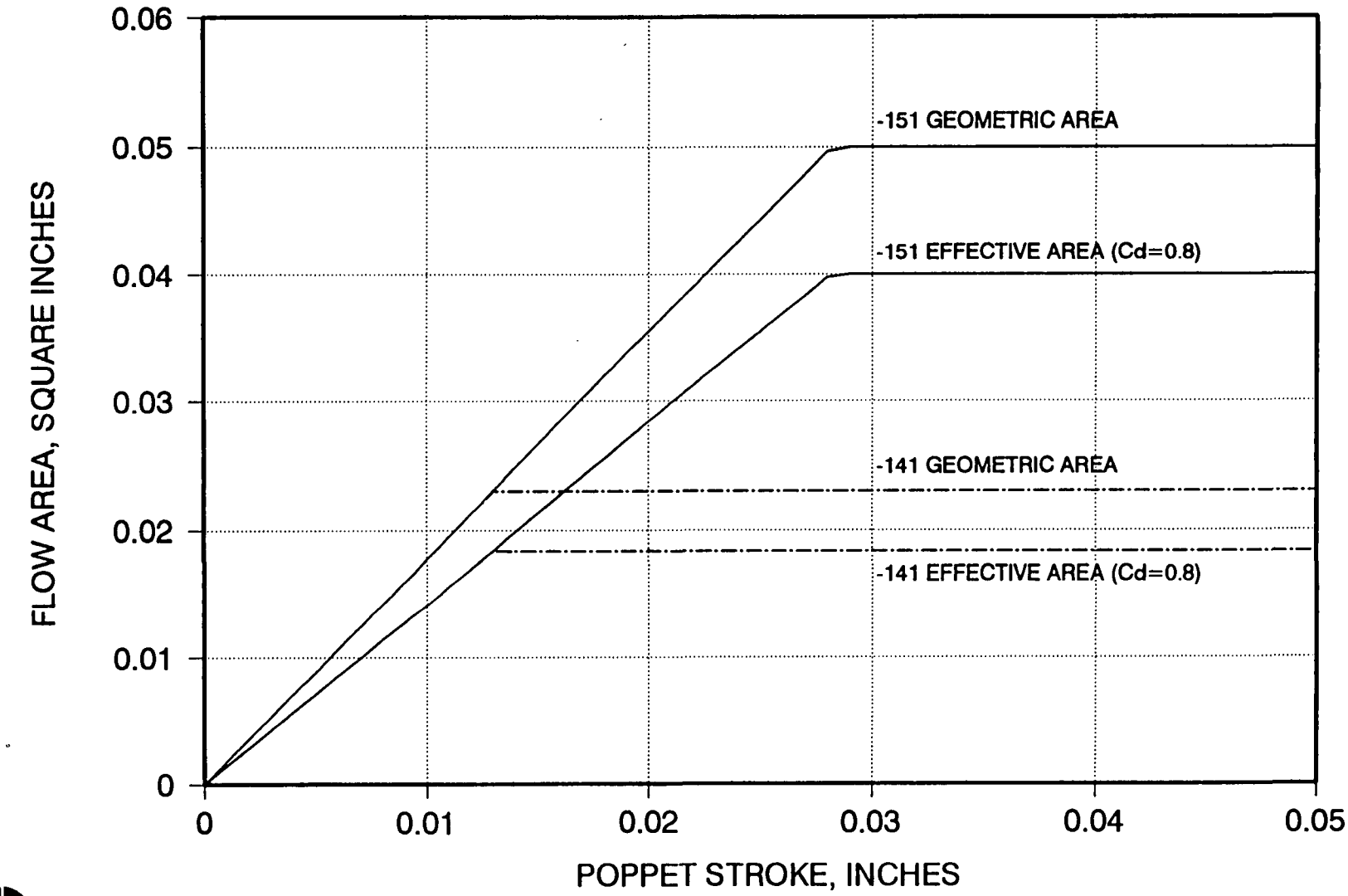

Rockwell International
Rocketdyne Division

BU-4

CHECK VALVE HELIUM FLOW

25 PSIG INLET PRESSURE

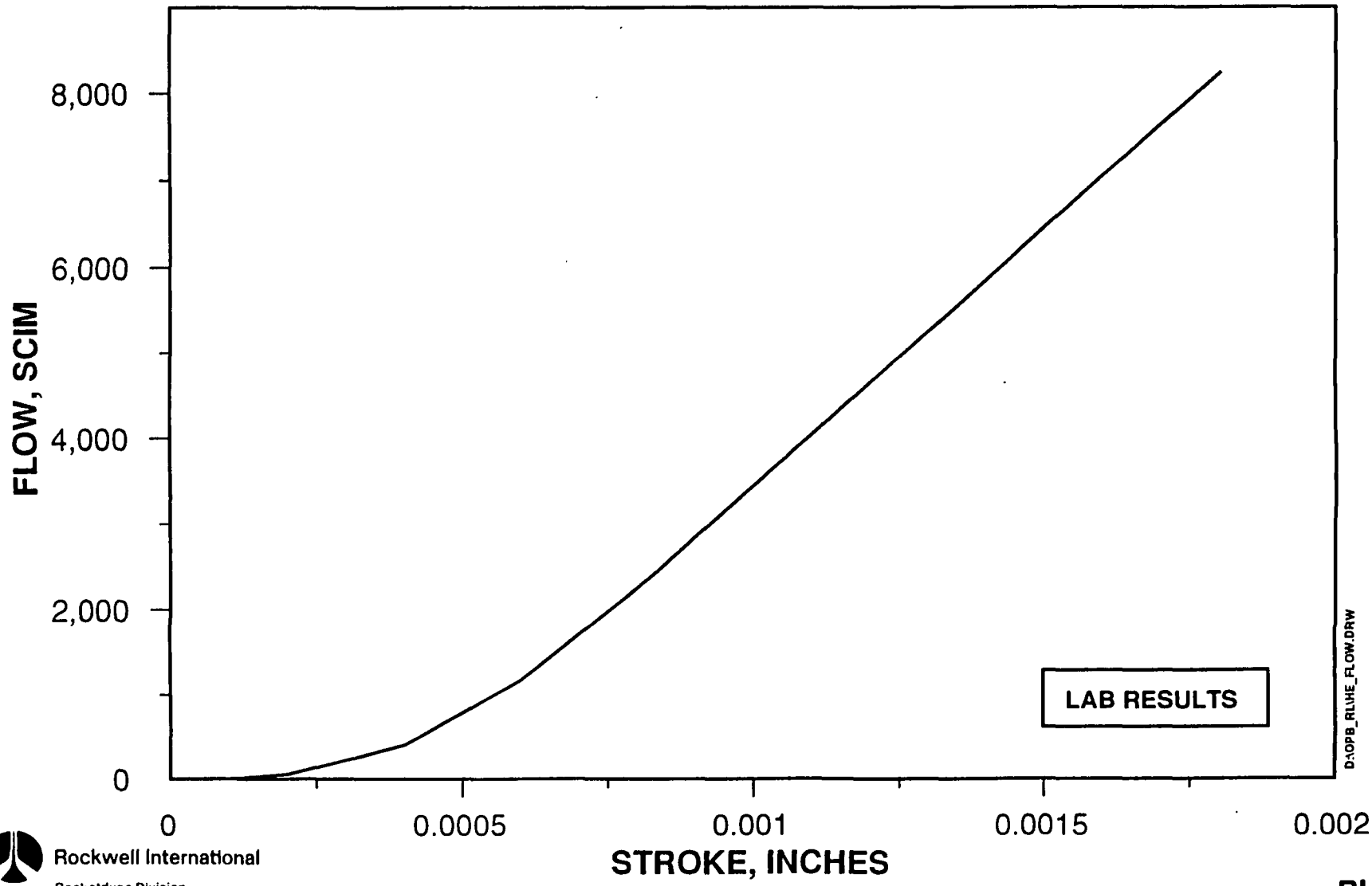

Rockwell International
Rocketdyne Division

BU-5

MEASURED PURGE PRESSURE AT 2.3 SECONDS

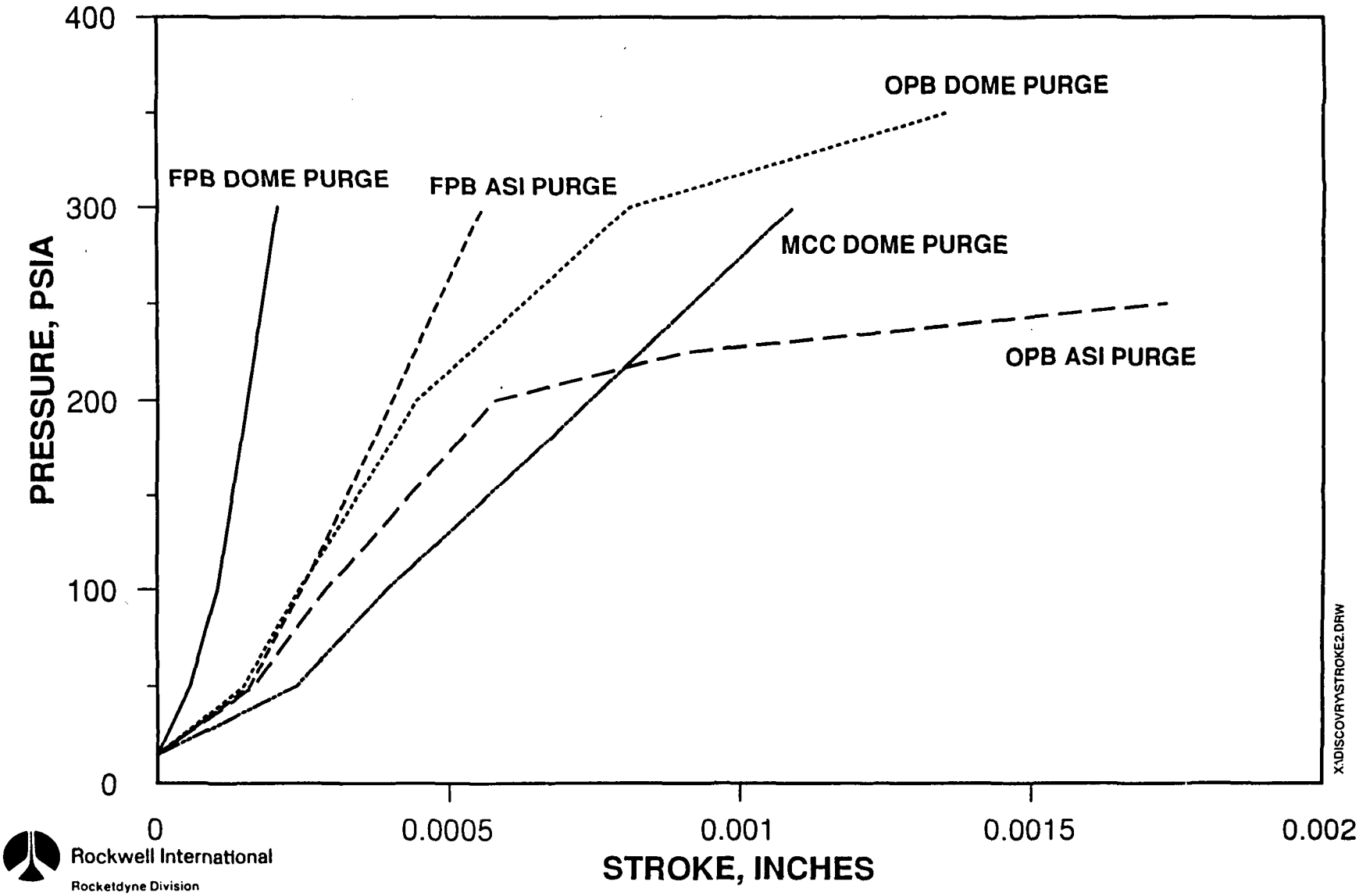

Rockwell International
Rocketdyne Division

BU-6

STS-55 ABORT FAULT TREE

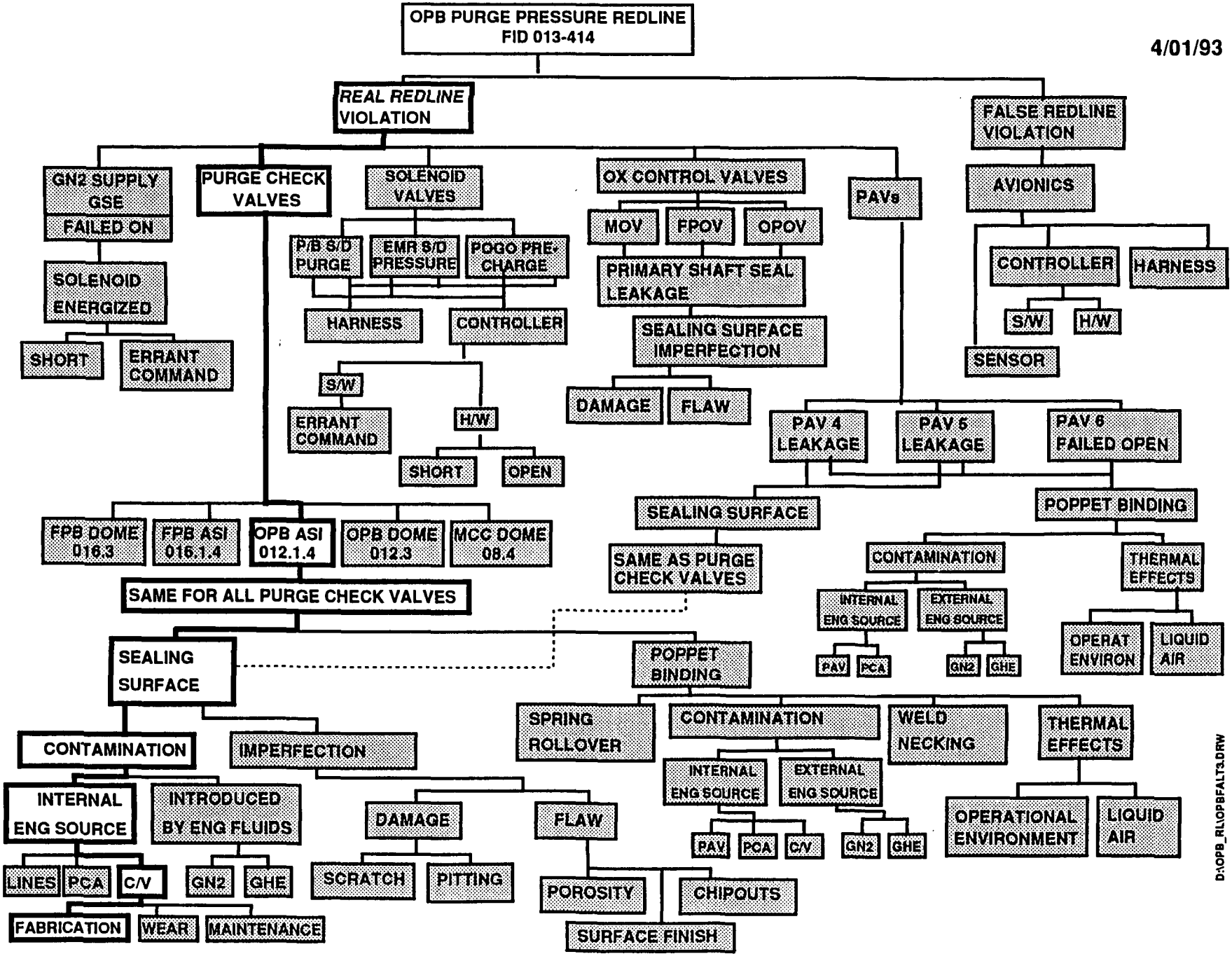

STS-55 PAD ABORT (ENGINE 2011)

FAILURE SCENARIO

EVENTS	DATA
(1) VALVE BUILD INTRODUCED CONTAMINATION	• FOUND AT DISASSY - LARGE BLACK PARTICLE WOULD NOT PASS THRU • IDENTIFIED TO BUILD TOOL (TWO PRIOR CASES DIS-COVERED IN BUILD) • CONSISTENT COMBINED LEAK CHECKS ABOVE DATA BASE • UPSTREAM ENGINE SYSTEM CLEAN
(2) CONTAMINANT MIGRATES TO D/S POPPET CAVITY & CAN BE ORIENTED TO NOT CAUSE LEAK & BE TRAPPED	• 12 HOT-FIRES & 4 SUCCESSFUL FLIGHTS • ZERO LEAKAGE IN 1st ISOLATION CHECK • SIMILAR CASE AT SSC (NOT SAME CONTAMINANT)
(3) A PORTION OF THE CONTAMINANT TRAPPED IN THE SEAT CAUSES LEAKAGE	• PRESSURE DATA & ANALYSIS • VERIFIED IN LEAK CHECK (.0004 EQUIV STROKE)
(4) LEAKAGE HIGH ENOUGH TO CAUSE REDLINE VIOLATION & SAFE S/D	• MODEL ANALYSIS • MEASURED LEAKAGE • REDUNDANT SENSORS • PRIOR TEST HISTORY
(5) FRAGMENTS (<.010) IGNITE IN 02 ENVIRONMENT UPSTREAM OF SEAT	• MATERIAL IS NOT LOX COMPATIBLE • ADIABATIC HEATING AT SHUTDOWN SUFFICIENT TO REACH IGNITION TEMP • CARBON RESIDUE FOUND
(6) INSUFFICIENT ENERGY RELEASED TO RAISE METAL TO > 2500° F	• NO EVIDENCE OF HEATING IN HARDWARE

CHECK VALVE COMBINED LEAKAGE DATA BASE

SCIM HE @ 25 PSIG

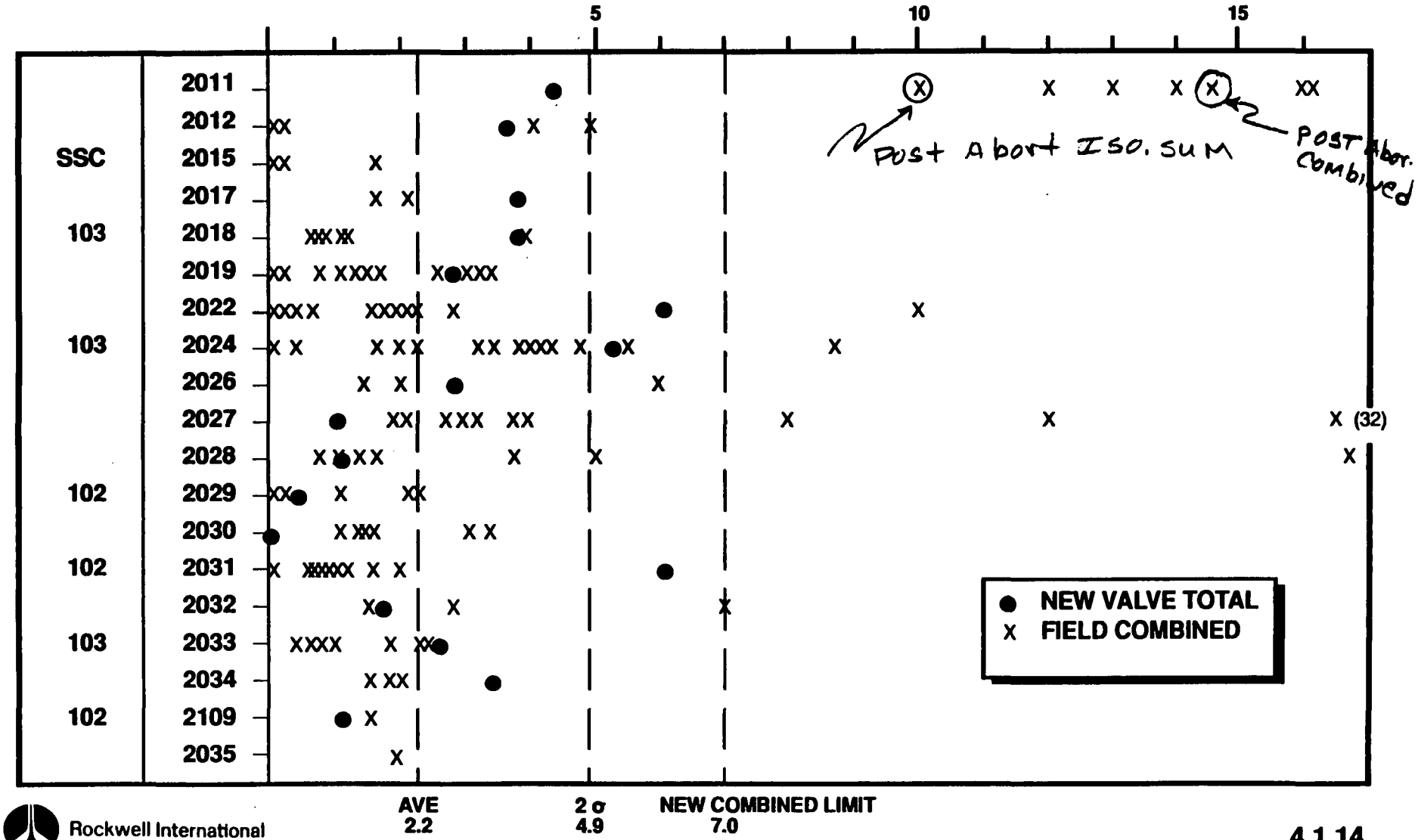

Rockwell International
Rocketdyne Division

4.1.14

57EXE3604-G

OV 103 CHECK VALVE HISTORY

PART NAME	PART NO.	ENG. 2024			ENG. 2033			ENG. 2018		
		STARTS/ SEC	BUILD DATE	LEAK CHECK AS BUILT AMB. @25 +/-1 (<10 SCIM)	STARTS/ SEC	BUILD DATE	LEAK CHECK AS BUILT AMB. @25 +/-1 (<10 SCIM)	STARTS/ SEC	BUILD DATE	LEAK CHECK AS BUILT AMB. @25 +/-1 (<10 SCIM)
FPB DOME PRG. C/V	RS008059-151	8/3668	10/82	4.5	6/1914	3/87	0	3/1366	1/91	<0.8
FPB ASI PRG C/V	RS008059-141	8/3668	6/88	0.7	4/1583	6/85	0	3/1366	2/91	<0.4
OPB ASI PRG C/V	RS008059-141	8/3668	5/85	0	6/1914	3/90	<.08	3/1366	1/91	<0.8
OPB DOME PRG C/V	RS008059-141	8/3668	11/86	0	6/1914	5/90	<0.8	3/1366	9/90	<0.8
MCC DOME PRG C/V	RS008059-151	22/8643	12/82	0	6/19143	3/90	<0.8	3/1366	11/90	<0.8

55PA\31S1-H

OV-103 ACTION PLAN

- **ACCUMULATE GN_2/COMBINED LEAK CHECK CYCLES UP TO TOTAL OF 8 INCLUDING PAST HISTORY**
  - CYCLE GN_2 ON 5 MINS. WITH THROAT PLUG REMOVED
  - INSTALL THROAT PLUG ASAP
  - CONDUCT COMBINED LEAK CHECK AT 10 AND 25 PSIG

90% Reliability
@ 50% CONFID.

- **IF > 7 SCIM CONDUCT ISOLATION TESTS**
  - CONDUCT ISOLATION TESTS UP TO 3 GN_2 CYCLES
  - REPLACE ANY VALVE > 6 SCIM

- **REPEAT GN_2 CYCLES AND COMBINED LEAK CHECK TO ACCUMULATE 8 TOTAL ON REPLACED HARDWARE**

Confidence Cycles BU-12

1816

LEAK CHECK CYCLES TO SCREEN LEAK

CONFIDENCE	VALVE LEAK FREQUENCY					
	40%	30%	20%	10%	5%	1%
.50	2	2	4	7	14	69
.90	5	7	11	22	45	229
.95	6	9	14	29	59	298
.99	9	13	21	44	90	458

55PAN31S1-S

CRITERIA: 8 CYCLES PROVIDE 90% RELIABILITY VALVE WILL NOT LEAK

OV-103
ME-1 (ENGINE 2024) LEAK TEST RESULTS

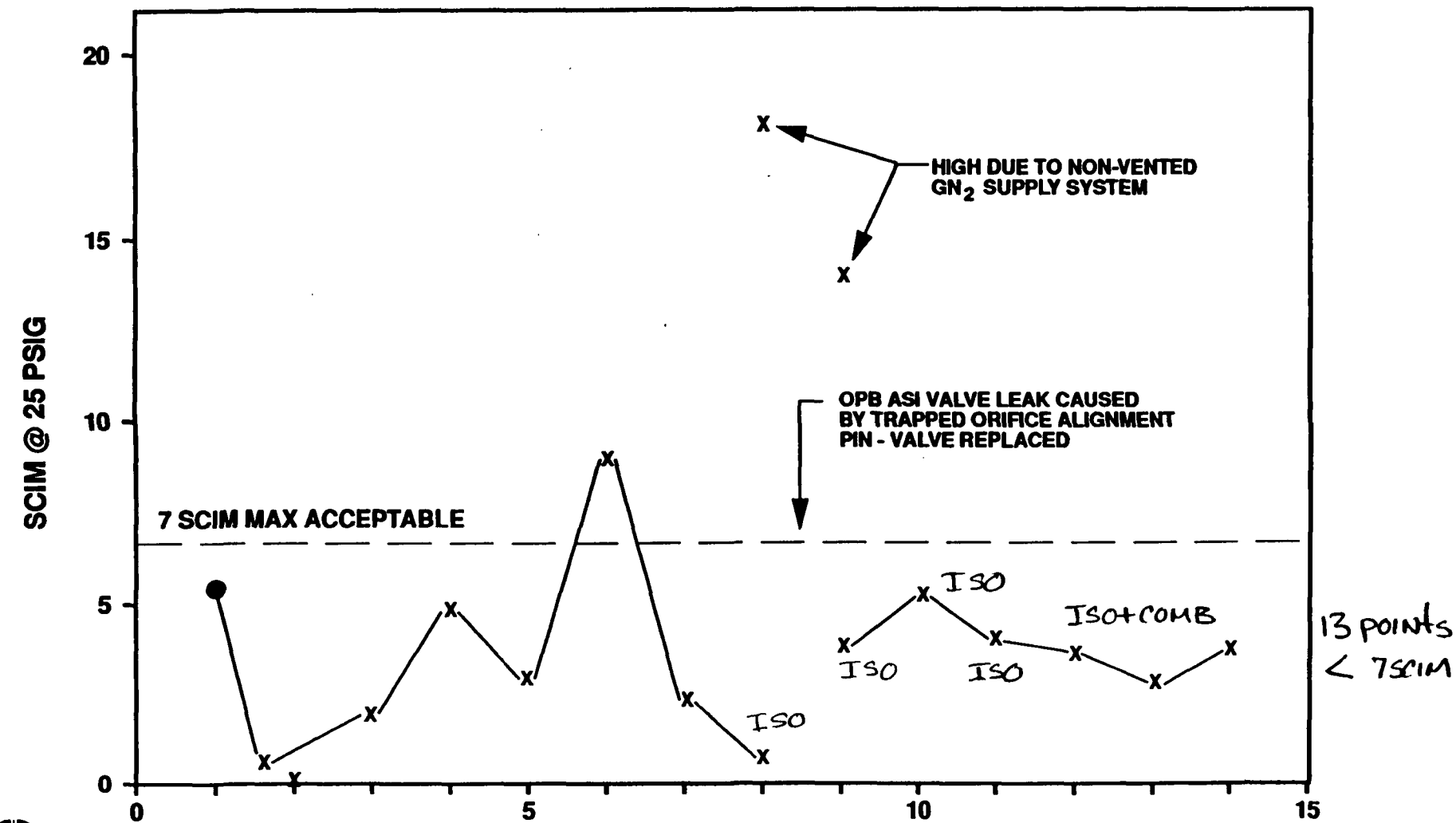

Rockwell International
Rocketdyne Division

57EXE36G4-M

4.1.16

LEAK CHECK MANIFOLD

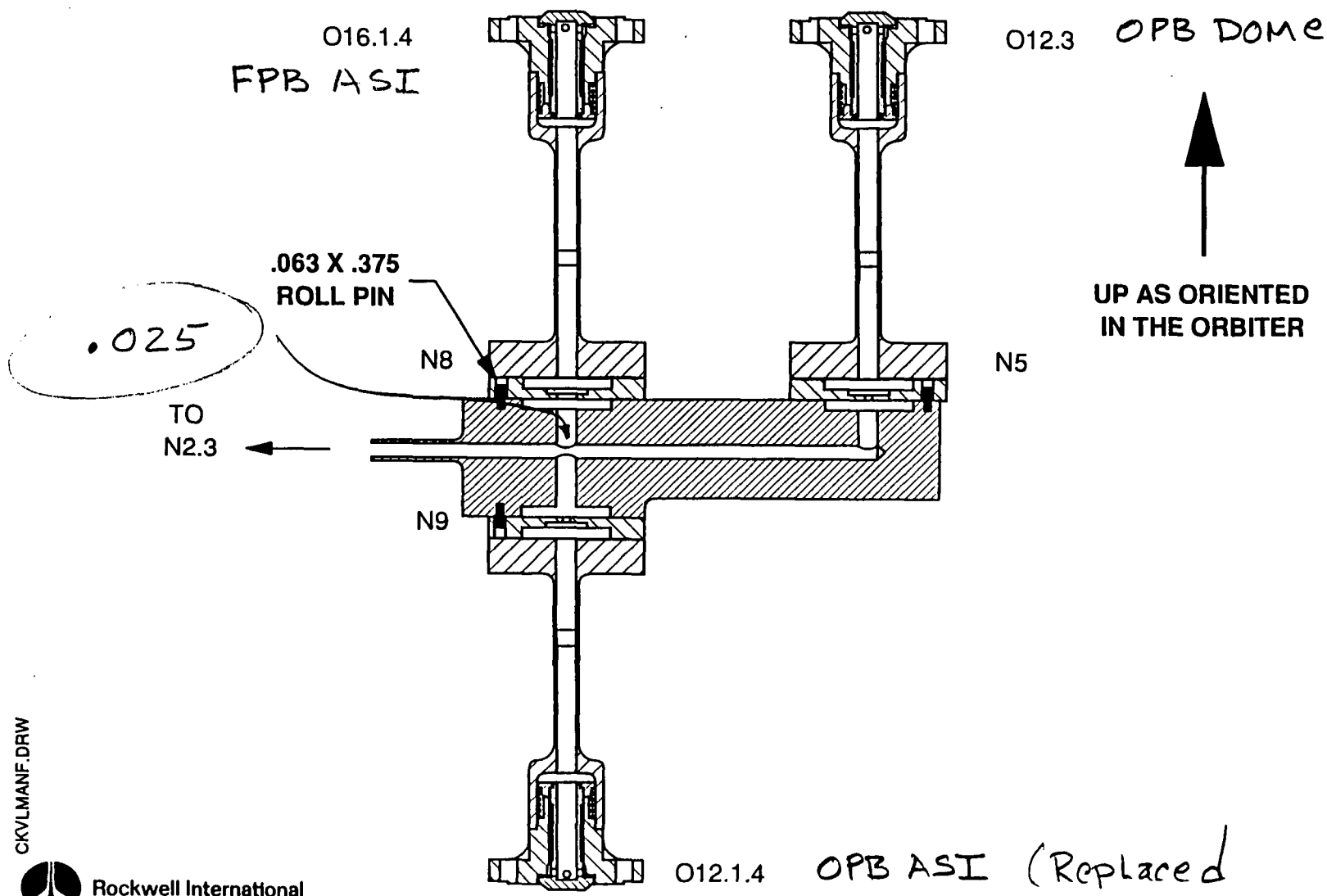

Particle Metalography BU-10

18

CKVLMANF.DRW

Rockwell International
Rocketdyne Division

E2024 OPB ASI Check Valve

Metallic Particle

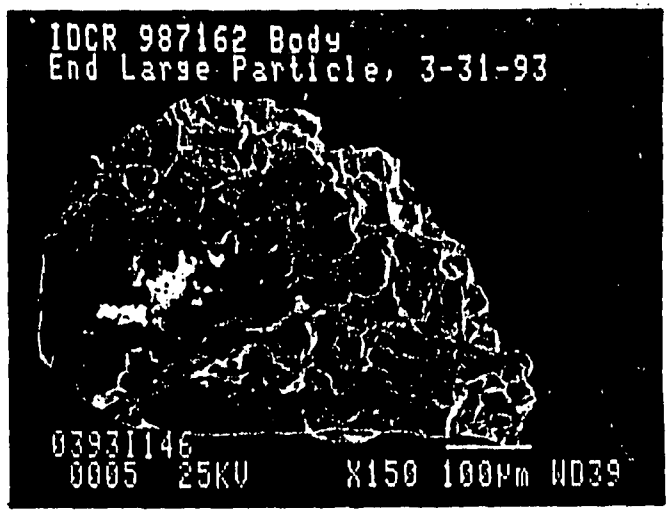

410 or 420
Stainless Steel
0.023 x 0.022 x 0.016

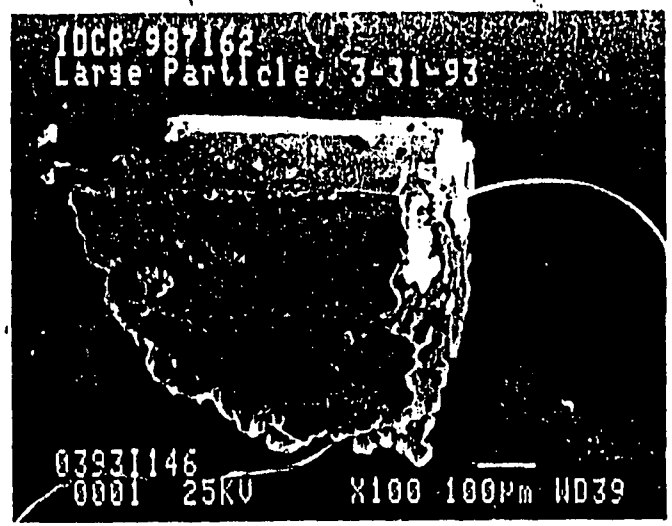

OV-105 STS-57

- **RATIONALE FOR FLIGHT**
  - TAKEN ALL STEPS TO MINIMIZE POTENTIAL FOR CONTAMINANT CAUSING PAD SHUTDOWN BY CONDUCTING GN2/LC CYCLES
    - NOT A SAFETY OF FLIGHT ISSUE
  - ONLY ONE OF 26 CHECK VALVES DISASSEMBLED SINCE 1988 (NON-LEAK RELATED) HAD CONTAMINANT (MINOR TEFLON)
  - ONLY ONE CASE OF CHECK VALVE LEAKAGE DETECTABLE IN ENGINE OPERATION FOR FLIGHT PROGRAM
    - 53 FLIGHTS / 7 FRFs (300 CHECK VALVE FLIGHTS)
    - 145 OXIDIZER PURGE CHECK VALVES
  - 4 TOTAL CHECK VALVE LEAKAGE CASES DURING HOTFIRE OPERATION WITH FLIGHT CONFIGURATION
    - 1700 TOTAL HOTFIRES (8500 CHECK VALVE TESTS)
    - IDENTIFIED CONTAMINANTS ALL DIFFERENT

	ENG	HIGH FLOW FPB PURGE C111	OPB PURGE C112	HIGH FLOW MCC DOME C113	FPB ASI C116	OPB ASI C117
1	2005	4888926	4912548	4887239	4888654	4911844
2	2006	4888925	4889925	4889978	4889220	4912544
3	2007	4889218	4889924	4888651	4888927	4889223
4	2011	4106979	4881780	4106980	4879256	4912549
5	2011	4874582	4877703	4874581	4884783	4873034
6	2012	4105343	4104141	4105328	4882674	4881294
7	2012	4888926	4887244	4887239	2792327	4874321
8	2015	4106974	4878925	4106975	4878926	4878102
9	2015	4106974	4889925	4887239	4878926	4889223
10	2015	4873031	4920791	4921466	2033845	4911844
11	2017	4863478	2156439	2094297	2033347	4879255
12	2017	4877126	4875722	4877125	4876601	4876599
13	2017	4877126	4877702	4877125	4876601	4876599
14	2018	2094299	4862278	4862276	4862281	4863606
15	2018	4920786	4920795	4876428	4876600	4920789
16	2019	4876579	4874586	4876578	4877701	4876603
17	2019	4876579	4877700	4876427	4877701	4876603
18	2020	4875718	4877702	4875717	4874698	4876086
19	2021	2726729	4875721	4876082	4876084	4876083
20	2022	4921242	4877128	2716711	4875720	4874966
21	2022	4921242	4877128	2805903	4875720	4874966
22	2023	4105330	4881293	4874963	4876605	4876085
23	2024	4920787	2797732	4876428	2033844	4873035
24	2026	4920786	4889925	4106980	4873631	4915018
25	2027	4874320	4873632	4874964	4923477	4921642
26	2028	4921465	2790406	4923524	4871550	4923476
27	2029	4872535	2792325	2805902	4926348	4871549
28	2030	4921467	4875722	4923478	4876600	4871552
29	2031	4873629	4873032	4876081	4871052	4871053
30	2031	4873629	4912548	4876081	4871052	4871053
31	2032	2033348	4871051	2033838	2033843	2033346
32	2033	2821028	4863603	2082840	4872536	2084007
33	2034	2104802	4862585	4863602	4863605	2084758
34	2035	4863479	4862279	2113436	4863482	2084757
35	2107	4872534	4920795	4874319	4873033	4920789
36	2109	4104667	4887244	4915020	4884783	4884785
TOTOL UNIQUE	26	29	28	30	29	29

TOTAL UNIQUE ALL C/V'S 145

PURGE CHECK VALVE CONTAMINATION

LAUNCH ABORT PROBABILITY

EXPOSURE HISTORY

PURGE SYSTEM CHANGED IN OCTOBER 1983

FPOV ORIFICE ENLARGED - REDLINE ADDED

972 TESTS WITH CURRENT CONFIGURATION

ANY ONE OF FIVE CHECK VALVES CAN CAUSE SHUTDOWN

5 X 972 = 4,860 EXPOSURES

FAILURE HISTORY - FOUR FAILURES

	TEST	DATE	LEAK CAUSE
1.	902253	12/81	UNKNOWN METALLIC
2.	902331	02/84	POLYKEN TAPE
3.	904099	12/90	INCONEL 718 PARTICLE
4.	STS-55 ABORT	03/93	O-RING FRAGMENT

LAUNCH ABORT PROBABILITY

SINGLE CHECK VALVE - 4 FAILURES IN 4,860 EXPOSURES

RELIABILITY = .999

ORBITER - THREE ENGINES WITH FIVE CHECK VALVES EACH

RELIABILITY = 0.98407

MTBF = 71 LAUNCHES

STS-55 .BORT
NDE TECHNIQUES ATTEMPTED

- **X-RAY (CANOGA FACILITY)**
  - SPECIMEN
    - CHECK VALVE BODY AND POPPET WITH .005" SHIM STOCK BETWEEN THE TWO SEALING SURFACES
  - RESULTS
    - A GAP BETWEEN THE BODY AND POPPET SEALING SURFACES WAS DETECTABLE
- **MICROFOCUS X-RAY (HONEYWELL, INTERNATIONAL - CLEARWATER, FL)**
  - SPECIMEN
    - CHECK VALVE BODY AND POPPET WITH .005" SHIM STOCK BETWEEN THE TWO SEALING SURFACES
  - RESULTS
    - INSUFFICIENT RESOLUTION
- **COMPUTER TOMOGRAPHY (DE SOTO AND SANTA SUSANA FACILITIES)**
  - SPECIMEN
    - CHECK VALVE BODY AND POPPET WITH .050" WIRE CRUSHED TO APPROXIMATELY .020" BETWEEN THE TWO SEALING SURFACES
  - RESULTS
    - THE WIRE WAS DETECTABLE