12-8-93
E8169

NASA Contractor Report 191149

TROPIX Plasma Interactions Group Report

Joel L. Herr
Sverdrup Technology, Inc.
Lewis Research Center Group
Brook Park, Ohio

and

Ricaurte Chock
National Aeronautics and Space Administration
Lewis Research Center
Cleveland, Ohio

October 1993

Prepared for
Lewis Research Center
Under Contract NAS3–25266

National Aeronautics and
Space Administration

Forward

The purpose of this report is to summarize the spacecraft charging analysis conducted by the plasma interactions group during the period from April 1993 to July 1993, on the proposed TROPIX spacecraft, and to make design recommendations which will limit the detrimental effects introduced by spacecraft charging. The recommendations were presented to the TROPIX study team at a Technical Review meeting held on July 15, 1993.

Contents

Page

I. Introduction 1
II. TROPIX Design Considerations 2
TROPIX Spacecraft and Mission Description 2
Factors Influencing Charging in LEO 3
Ram/Wake Effects 3
Electrical Grounding Configuration 3
Electrical Conductivity of Surface Material 4
Exposed High Voltage Surfaces 4
Factors Influencing Charging in GEO 4
Dielectric Surface Materials 5
Sun/Shade Effects 5
III. TROPIX Charging Study Results 5
Low Earth Orbit Charging Study 6
NASCAP/LEO TROPIX Model and Simulation Overview 6
NASCAP/LEO Charging Study Results 7
Floating Potential 8
Array/Experiment Electric Field Interaction 9
Ambient Currents to Spacecraft with Ion Thrusters Operating 9
Geosynchronous Orbit Charging Study 9
NASCAP/GEO TROPIX Model and Simulation Overview 9
NASCAP/GEO Charging Study Results 11
Differential Charging Levels 11
Ambient Currents to Spacecraft with Ion Thrusters Operating 13
IV. Design Recommendations 13
Recommendations Affecting Thermal System Design 13
Recommendations Affecting Power System Design 14
Recommendations Affecting Ion Thruster Design 14
Recommendations Affecting Scientific Package 15
V. Expected Charging Behavior 15
Low Earth Orbit Expected Charging Behavior 15
Geosynchronous Orbit Expected Charging Behavior 16

Bibliography 17
Appendix A. Ion Thruster as a Plasma Contactor 24
Appendix B. Tabulated NASCAP/LEO Charging Simulation Results 28
Appendix C. Tabulated NASCAP/GEO Charging Simulation Results 32

I. Introduction

The TRansfer Orbit Plasma Interaction EXperiment (TROPIX) proposed spacecraft provides a unique opportunity from the standpoint of studying spacecraft charging because it will reside in all three charging environments: low Earth orbit (LEO), the radiation belts, and geosynchronous orbit (GEO). In all regimes, a spacecraft will electrically charge to balance incoming ambient ion and electron currents, typically charging negative in order to collect enough of the less mobile ions. The level of charging that occurs varies as a function of the characteristics of the ambient plasma.

In LEO, the plasma is relatively dense but of low energy. The ambient plasma current flux to spacecraft surfaces is on the order of milliamps per meter squared. The charging behavior of a spacecraft is controlled mainly by ram/wake effects, the electrical grounding configuration of the solar arrays, and the exposure of high voltage surfaces to the ambient plasma. Most of the adverse effects caused by spacecraft charging in LEO (i.e. sputtering, contamination, arcing) depend on the charging level, or the floating potential, of the spacecraft.

In GEO, the ambient plasma current fluxes to spacecraft surfaces are on the order of microamps per square meter. Typically, only minor charging occurs during quiescent periods because photoelectron emission, which is on the order of tens of microamps per square meter, tends to dominate maintaining the spacecraft near space plasma potential. During a geomagnetic substorm, however, the spacecraft is immersed in a very energetic plasma with temperatures on the order of kiloelectron-volts. This environment has been shown to charge spacecraft surfaces to the extent that electrostatic discharges occur. The charging behavior during a substorm is controlled mainly by the plasma characteristics, the properties of the materials comprising the spacecraft outer surface, and sun/shade effects.

Tables 1 and 2 list the different charging phenomena that occur at LEO and GEO altitudes, and how these effects are related to spacecraft design. Table 3 summarizes ambient plasma properties for LEO and GEO altitudes.

The study to follow focuses on the charging behavior of TROPIX in the LEO and GEO environments. Modeling is accomplished using two computer codes. NASCAP/LEO[1] is used to simulate the charging behavior of a spacecraft in low Earth orbit. It calculates, among other things, the charging level of exterior surfaces, the floating potential relative to plasma, the penetration of high voltage into the ambient plasma, and the currents collected by high voltage surfaces.

The second computer code, NASCAP/GEO[2], is the equivalent of NASCAP/LEO but for geosynchronous altitudes. NASCAP/GEO is used to model the interaction of TROPIX with a geomagnetic substorm environment. Charging levels of exterior surfaces and the floating potential of the spacecraft relative to plasma are determined as a function of spacecraft design and orbital conditions. Areas where large surface voltage gradients exist are identified as possible electrostatic discharge sites.

This study, conducted during the concept phase of TROPIX, describes the effects of various spacecraft design issues on the resulting charging behavior. The purpose is to provide design guidelines to limit the detrimental effects caused by spacecraft charging. A general set of guidelines applicable to all spacecraft is available to spacecraft system designers.[3] This document was intended for geosynchronous spacecraft design, but many of the guidelines apply to low Earth orbiting space systems. The charging study conducted on TROPIX follows the recommended modeling procedures outlined in the document.

The next section reviews the overall TROPIX spacecraft design and mission objectives, and

how they might influence the TROPIX design from a charging standpoint. A more complete description of the factors influencing spacecraft charging in the LEO and GEO environments follows. An overview of the charging study and the results are presented in section III. Ranges of floating potentials for LEO, and differential potentials for GEO, are given as a function of spacecraft design, particularly the composition of the outer surface materials. The use of positive grounding to lower the floating potential is investigated for combinations of surface materials that resulted in 'worst-case' charging levels in LEO. Based on the charging analysis, design recommendations are listed in section IV grouped by which subsystem they will effect (i.e. thermal, power, propulsion, and the scientific package). Section V describes the expected charging behavior of the TROPIX spacecraft if all recommendations listed are incorporated into the design.

II. TROPIX Design Considerations

TROPIX Spacecraft and Mission Description

The body of the spacecraft is a rectangular cage with dimensions of approximately 1.3 x .5 x 1 m (Fig. 1). The sides of the body will be partially covered with optical solar reflectors (OSR) and multilayer insulation (MLI) as part of the thermal control system. For propulsion, two 20-cm xenon ion thrusters are positioned at the bottom end of the main body. The science package is placed at the top (ram facing direction) of the main body. The power system, employing two rigid solar array wings with an area of approximately 13.5 m^2, will provide 1.9 kW of power at launch.

The spacecraft will be launched into a 325 km circular orbit at 65°. From there it will begin to spiral out by means of its ion thrusters toward a destination altitude of 35900 km. The orbit will traverse from LEO to GEO through the radiation belts. As part of its mission, TROPIX will map the energy spectrum of ambient charged particles in all near-Earth regimes. Plasma interactions with selected samples of electrically biased solar cells and array technologies will be incorporated as part of the scientific package. As part of its stated objectives supporting space technology, the mission will evaluate ion thrusters as plasma contactors in addition to using them for spiraling out to GEO.

The three environments in which TROPIX will reside have associated with them different charging phenomena. This raises the question as to which environment the spacecraft charging control design should be optimized for. The TROPIX mission objectives are geared toward measurement of the plasma properties and extended ion thruster use. Early survivability and a 'clean' plasma measurement environment from LEO through the radiation belts seem to be the main concerns. Therefore, the guidelines and discussion to follow are geared toward optimizing for the scientific package in all regimes.

The scientific package will include a number of instruments to measure characteristics of ambient and self-generated ions and electrons. However, spacecraft charging alters the characteristics of the ambient charged particles as they approach the spacecraft by accelerating or decelerating them, and affecting their flight path. It is therefore important to understand how the particles are affected, and possibly to provide for an electrostatically undisturbed environment in which to make the measurements. Inactive methods, such as the proper choice of surface material and power system configuration can be investigated as a means of controlling the level of charging. The use of active devices, such as electron guns and hollow cathodes which act to discharge or neutralize a spacecraft, have also been explored.

The primary purpose of the ion thrusters is to provide propulsion. However, if the thruster system is connected electrically to spacecraft ground, it is expected that thruster operation will affect the floating potential. During thruster operation, ion beam and neutralizer currents far exceed expected current collection from the surrounding plasma, so they will dominate the ambient plasma to control floating potentials. At present, sufficient data are not available to exactly determine how the thrusters will interact with the space plasma. However, based on results from the SERT II[4] and ATS-5/6[5] missions which utilized ion thrusters, it is expected that thruster operation will clamp the ground potential of the spacecraft to within 15 to 20 volts negative of plasma potential. Appendix A gives a more detailed explanation of how the ion thrusters are expected to make contact with the plasma. A summary of the ion thruster experiments conducted as part of the SERT and ATS programs is also given.

Factors Influencing Charging in LEO

Most of the adverse effects caused by spacecraft charging in LEO (i.e. sputtering, contamination, arcing) depend on the charging level, or the floating potential, of the spacecraft. The floating potential is defined as that potential necessary to balance the incoming ion and electron currents. Typically, a spacecraft will charge negatively in order to collect enough of the less mobile heavy ions. As the floating potential increases more negative (greater than 30 volts negative of plasma ground), the severity of these effects also increases.

Several factors influence the relative magnitudes of ion and electron currents. These include ram/wake effects, the operating voltage and electrical grounding configuration of the solar arrays, outer surface material electrical conductivity and how these surfaces are connected to spacecraft ground, and the exposure of high voltage surfaces to the ambient plasma.

Ram/Wake Effects

Since the thermal velocity of the positive ions is much less than the spacecraft orbital velocity, the ions will mostly be collected on the forward or ram facing surfaces. In effect, the forward facing surfaces will sweep the ions, leaving a wake region of very low ambient density behind the spacecraft. Therefore, ion current is limited to mostly ram surfaces, while electron currents are not. Thus, increasing the exposed ram facing conductive areas increases the ion current to the spacecraft which then lowers (less negative) the floating potential.

Electrical Grounding Configuration

Grounding the spacecraft power management system to the negative end of the solar array drives the spacecraft floating potential negative. This is because the solar array will float mostly negative with respect to the plasma in order to collect the less mobile ions more efficiently. As a rule of thumb, the negative end of the solar array will be approximately 90% negative of its bus voltage. For example, an array with a bus voltage of 30 V will have its negative end floating around 27 V

negative of plasma ground. Thus, tying the spacecraft electrical ground to the negative end of the array will cause the spacecraft to float at -27 V. On the other hand, tying the spacecraft to the positive end of the array will cause it to float at +3 V or close to plasma ground, thus limiting the detrimental effects caused by a high negative floating potential.

Electrical Conductivity of Surface Material

Conductive surfaces tied to spacecraft ground will assume the potential of the ground. If the ground potential is highly negative, these surfaces are susceptible to sputtering and enhanced contamination. Dielectric surfaces exposed to the ambient plasma typically charge only on the order of a few volts negative in LEO which does not present much of a problem by itself. However, if the array operating voltage is large enough, the resulting electrical stress between the dielectric surface and the underlying structure can cause dielectric breakdown or discharge. Typically, this is not an issue for systems operating at 30 V or less.

Exposed High Voltage Surfaces

A high voltage surface, such as an experimental plate, if exposed to the plasma will alter the floating potential of the spacecraft for the duration of the experiment. For example, as part of the science package on TROPIX, surfaces will be biased +300 V relative to spacecraft ground. These will collect electron currents readily, driving the potential of the spacecraft negative in order to collect a balancing ion current. So while TROPIX, with a bus voltage of 30 V, would be expected to float around -27 V for negative grounding, operating the experiment could cause floating potentials greater than -100 V.

Factors Influencing Charging in GEO

In GEO, severe spacecraft charging can occur due to an encounter with a geomagnetic substorm. Floating potentials in the negative kilovolt range have been documented during past missions.[6,7] Most of the adverse effects caused by spacecraft charging in GEO depend on the levels of differential charging that occur. This is characterized by parts of a spacecraft charging to different potentials relative to each other. Differential charging can result in electrostatic discharges if the electric fields between different regions exceed breakdown thresholds. The resulting transients can couple with spacecraft electronics and cause anomalies ranging in severity from logic switching to system failure.

In addition, differential charging can alter the characteristics of particle fluxes to a surface. Take for example a spacecraft with a shaded dielectric surface adjacent to a scientific instrument. Typically, photoelectron emission tends to dominate the ambient charging currents maintaining a surface near plasma potential. If a spacecraft is charged uniformly by the geomagnetic substorm, the lowest energy particles detected will be representative of the spacecraft potential, since they would have been accelerated by such an amount. The shaded dielectric surface, however, will charge highly

negative due to a lack of photoelectron emission. The accumulated negative charge dominates the local electrostatic field, forming a "potential barrier"[8] in the line-of-sight of the instrument, altering the impinging distribution of particles beyond a simple acceleration.

Several factors influence the level of differential charging that occurs for given substorm characteristics. Most depend on the electrical properties of the spacecraft outer surface materials. These include the amount of dielectric material that comprises the spacecraft outer surface area, and sun/shade effects. Presently, the only sure way to eliminate differential charging is to make the entire spacecraft outer surface conductive and tie all elements to spacecraft ground.

Dielectric Surface Materials

Whenever dielectric surfaces are present, differential charging will occur. Dielectric surfaces are inefficient at distributing charge, and will develop a differential potential relative to the underlying structure as well as to other nearby surfaces. The magnitude of the potential difference partially depends on how much of the outer surface of the spacecraft is dielectric. Large, negatively charged dielectric surfaces tend to dominate the electrostatic field about a spacecraft, inhibiting photoelectron emission from other surfaces. This tends to drive the spacecraft ground more negative as well. The magnitude of the spacecraft ground potential may be large, but the differential potential between it and the dielectric surfaces may not be. If only small areas of dielectric are present, they will charge negatively as before, but won't have much of an effect on the photoemission from other surfaces. Photoemission will maintain spacecraft ground near space plasma potential, resulting in a much larger differential potential between the dielectric surfaces and spacecraft ground.

Sun/Shade Effects

Because of the low density at geosynchronous altitudes, ambient plasma current fluxes are on the order of microamps per meter squared. Photoelectron emission from surfaces, which is on the order of tens of microamps per square meter, can therefore play an important role in balancing currents to the spacecraft. Typically, photoelectron emission dominates the ambient currents preventing sunlit surfaces from charging highly negative. However, regions of the spacecraft that are shaded lack the photoelectron contribution. If these surfaces are conductive and connected to spacecraft ground, the photoemission from sunlit surfaces will prevent them from charging highly negative. If, however, they are dielectric, the surface will charge negatively resulting in a differential potential. The largest differential potentials will be between shaded surfaces and surfaces or structure whose potential is dominated by photoemission.

III. TROPIX Charging Study Results

The following results were obtained using two computer codes; The NASA Charging Analyzer Program for geosynchronous orbit charging simulation, NASCAP/GEO, and its counterpart, NASCAP/LEO, for low Earth orbit. Both codes incorporate a 3-dimensional model of a spacecraft,

allowing for combinations of different surface materials. The electrical connection of surfaces can be specified allowing for the definition of a solar array power system as well as actively biased regions such as portions of the TROPIX scientific package. The characteristics of the ambient plasma must be specified. The charging simulation is conducted by iteratively determining the magnitudes of relevant charging currents and the potential of spacecraft surfaces. NASCAP/GEO has a time-dependence while NASCAP/LEO is steady-state only.

As part of their output, both codes provide the charging levels of exterior surfaces, the spacecraft ground potential, the magnitude of the current collected by the spacecraft, and contour plots which show the electrostatic potential field around the spacecraft. Using this information, trade studies can be done which examine how changes in a spacecraft design effects the charging behavior.

Low Earth Orbit Charging Study

NASCAP/LEO TROPIX Model and Simulation Overview

Figure (2) shows the NASCAP/LEO model of TROPIX. The solar arrays are divided into 10 different conductors, each capable of being biased relative to spacecraft ground and each other to simulate the voltage distribution across the solar arrays. On the top (ram facing direction) end of the main body is a metallic surface defined as being a separate conductor which can be biased relative to spacecraft ground. This surface will be biased up to +300 V relative to ground to simulate a portion of the scientific investigation being conducted by the TROPIX mission. The sides of the main body are composed of optical solar reflectors (OSR) and metalized multi-layered insulative blanket (MLI). The MLI has a conductive outer surface coating. The OSR is a dielectric, but can be coated by a layer of conductive indium tin oxide (ITO). The backs of the solar arrays (substrate) are Kapton which is a dielectric, but can also be coated with ITO. The fronts of the solar arrays are a combination of dielectric cover-glass and exposed metallic interconnects. When the solar arrays are active, the interconnects will assume a potential with an individual value depending on their position in a string of cells. The electric fields from the biased interconnects will expand out into space attracting charged particles from an area much larger than that of the interconnects themselves. The maximum current collected by the solar arrays is found by assuming that the expanding electric fields cover the entire solar array front surface. For the cases presented in this section, the front surface of the solar arrays is assumed to be completely metallic which will maximize the estimated current to the arrays and maximize the electrical interaction between the solar arrays and the scientific package.

Referring to the description on factors influencing charging in LEO, the important factors are ram/wake effects, the electrical grounding configuration of the solar arrays, surface material composition, and the biased surface as part of the scientific package. The main spacecraft body will be oriented with its long axis parallel to the velocity vector at all points in the orbit. Therefore, changes in ram/wake effects will be caused by the rotation of the solar arrays in tracking the sun. The backs of the solar arrays can be made dielectric or conductive. If the backs are conductive and in the ram direction, they will collect ions very efficiently driving the floating potential less negative. In order to examine ram/wake effects, the solar arrays of the model were positioned with the front surface in ram, wake and edge on with the plasma flow.

For nearly all spacecraft launched to date, the electrical system has been grounded to the negative end of the solar array. Three voltage levels were suggested for the TROPIX mission, 30, 60,

and 120 V. Anything greater than 30 V when negative grounding is utilized is not recommended. At this stage of the interaction analysis, the simulations were run with a 30 V bus and negative grounding. Certain cases were run with higher voltage levels with positive and negative grounding to bound the effects of grounding configuration.

Since the main body will be oriented the same relative to the velocity vector, changing the composition of the surface materials on the sides of the main body will not affect ram-swept ion currents directly. However, ions can be focused to these surfaces by local electric fields in certain cases. In order to investigate the effects of the main body surface material composition on the floating potential, different combinations of dielectric and conductive surfaces were used in the simulations.

Plasma interactions with selected samples of electrically biased solar cells and array technologies will be incorporated as part of the experiment package. These surfaces will be biased up to +300 V relative to spacecraft ground and will collect electron currents readily, driving the potential of the spacecraft negative. All combinations of solar array orientations and body material composition were simulated with the experimental surface biased at 0 and +300 V relative to spacecraft ground to examine the effect on the floating potential.

Also related to the operation of the scientific instruments is the proximity of the solar arrays. If the solar arrays are too close to the scientific instruments, the electric fields created by the potential on the solar arrays will interact with those of the instruments. In order for the instruments to measure the properties of the ambient plasma accurately, the least amount of interaction is desired. The level of interaction will depend on the surface material on the back of the solar array, the solar array bus voltage, the magnitude of the floating potential, and the distance from the solar arrays to the instruments. If the backs of the solar arrays are conductive and tied to spacecraft ground, they will assume the potential of the ground. Their electric fields will propagate out into space and possibly interact with the electric fields from the scientific package. The more negative the floating potential, the farther the electric fields extend from the solar arrays. If the solar array backs are dielectric, they will float at approximately -1 V relative to plasma independent of spacecraft ground, and will present less of an interaction problem.

The electrical interaction between the solar arrays and scientific package can be minimized by moving the solar arrays away from the main body. This distance however, is limited by flight dynamic considerations. In the simulations, distances of .36 and 1.5 meters between the edge of the solar array and the side of the main body were investigated.

Of equal importance with all the factors discussed above is the operation of the ion thrusters. When a spacecraft is immersed in a plasma it will charge to a potential necessary to balance ion and electron currents so that the net current collected by all conductive paths on the spacecraft is zero. When the thrusters are operating and the neutralizer is tied to spacecraft ground, it is expected that the ground potential of the spacecraft will be clamped to within -15 to -20 V of plasma potential. If this value is different than the 'natural' floating potential, the net current to the spacecraft ground would no longer be zero. Thus, in order to maintain the -15 to -20 V floating potential, the current from the thruster system must adjust to balance the overall current. The magnitude of this current was estimated in the simulations by fixing the spacecraft ground potential to -15 V, and calculating the resulting ambient current to the spacecraft.

NASCAP/LEO Charging Study Results

The important results from the NASCAP/LEO charging simulations are the floating potential of the spacecraft ground, whether or not the electric fields from the solar arrays and the scientific package interact, and the current that the thruster system will need to compensate for in order to maintain the ground potential of the spacecraft at -15 V relative to plasma. This data is presented as a function of the following spacecraft design parameters: main body surface material (all conductive, or a combination of dielectric and conductor), solar array orientation (ram, wake, and edge on to plasma flow), solar array position (.36 and 1.5 meters from spacecraft body), solar array back surface material (dielectric or conductive), and experimental surface bias (0 and +300 volts relative to spacecraft ground). These results are for a 30 V bus system, negatively grounded. The material design combinations that resulted in the highest negative floating potential for a 30 V bus were rerun with a 60 and 120 V bus systems, positively and negatively grounded, to illustrate the advantages of positive grounding. The characteristics of the LEO plasma chosen for the simulations are .1 eV ion and electron temperatures at a density of 10^5 cm^{-3}.

In the main text of this report, the range of predicted floating potentials of TROPIX is given as a function of the design parameters for the case when the ion thrusters are not operating. If the ion thrusters work as planned, the spacecraft floating potential will be -15 V relative to plasma. All computer run results are tabulated in appendix B for the NASCAP/LEO study conducted.

Floating Potential

When the experimental surface is not biased, the spacecraft floats in the range of -20 to -25 V relative to the plasma for all array orientations and material combinations on the main body. However, if the arrays have conductive backs which are in the ram (front of solar arrays in the wake), the floating potential drops to below -15 V.

When the experimental surface is biased to +300 V relative to spacecraft ground, the floating potential varies between -40 and -175 V. The least negative potential is achieved when the entire spacecraft body and solar array substrate is conductive, and the solar array substrate is in the ram. The worst case occurs for the same array orientation when the spacecraft is mostly dielectric (i.e. dielectric solar array substrate and a dielectric/conductor combination on the main body).

The advantages of positive grounding are demonstrated for the case of a mostly dielectric spacecraft (i.e. dielectric solar array substrate and a dielectric/conductor combination on the main body) and the solar arrays edge-on. For a 60 V bus, negatively grounded, the floating potential is -49 V with the experiment off and -100 V with the experimental surface biased at +300 V for a .36 m array position. If the arrays are then placed 1.5 m away from the body, the floating potentials are -48 V with the experiment off, and -120 V with the experiment on.

For the cases when the experimental surface is biased to +300 V, the floating potential tends to be more positive when the arrays are closer to body because the field interaction with the experiment tends to focus ion current to the conductive regions of the body. These are regions that would normally not collect ion current because they are parallel to the plasma flow.

If the 60 V bus is grounded positively, NASCAP/LEO shows that the floating potential with the experiment off is +2 V of plasma ground. If the arrays are placed at .36 m away from the body with the experiment on, the spacecraft will float at -70 V. If the arrays are placed at 1.5 m with the experiment on, the spacecraft floats at -97 V. This is an improvement over the previous floating potentials.

For the 120 V bus, the floating potentials are more negative than the 60 V case, but show similar trends. Marked improvement is seen if the 120 V bus is grounded positive. See the tables given in appendix B for the complete NASCAP/LEO simulation results.

Array/Experiment Electric Field Interaction

The electric fields from the solar arrays interact with the scientific package for all spacecraft design parameters when the solar arrays are .36 meters from the body. This occurs whether the experiment is on or off. If the solar arrays are placed 1.5 m away and the ion thruster neutralizer is connected to spacecraft ground and works as expected (keeping spacecraft ground around -15 V), then there is no field interaction. However, if the ion thrusters are not operating and the spacecraft assumes its 'natural' floating potential, there will be field interaction even for the 1.5 m separation.

Ambient Currents to Spacecraft with Ion Thrusters Operating

For the case of a mostly dielectric spacecraft, solar array fronts into ram, and the experiment on, the spacecraft will float at -75 V, with the net current to the spacecraft being zero (definition of floating potential). With the thruster operating, the current to the spacecraft is no longer zero. Under these conditions, NASCAP/LEO predicts currents of about -21.6 milliamps. Therefore, in order to keep the spacecraft at -15 V, the thruster system will have to adjust its electron current output by such an amount.

For the 30 V bus, the currents to the spacecraft maintained at -15 V will range from +2 to -22 milliamps for all design parameters. Positive currents are obtained when the backs of the solar arrays are conductive and oriented in the wake with the experiment off.

Higher currents are collected at higher bus voltages. In the worst case (a 120 V bus with a mostly dielectric spacecraft), the thrusters will be required to compensate for a -37 millamp current.

Overall, the more conductive surface area the spacecraft has, the less current the thrusters will have to compensate for in order to maintain the -15 V floating potential. Spacecraft current collection is a maximum when the solar array front surfaces are in the ram, and decreases as the solar arrays move into the wake. These trends have been seen for all design parameters tested.

Geosynchronous Orbit Charging Study

NASCAP/GEO TROPIX Model and Simulation Overview

Figure (3) shows the NASCAP/GEO model of TROPIX. The solar arrays are divided into different conductors, each capable of being biased relative to spacecraft ground and each other. However, with charging by geomagnetic substorms reaching kilovolt levels, the bus voltage of the solar arrays is not important. On the top (ram facing direction) end of the main body is a metallic surface defined as being a separate conductor which can be biased relative to spacecraft ground. This surface will be biased up to +300 V relative to ground as part of the scientific investigation being conducted

by the TROPIX mission. The sides of the main body are composed of optical solar reflectors (OSR) and metalized multi-layered insulative blanket (MLI). The MLI has a conductive outer surface coating. The OSR is a dielectric, but can be coated by a layer of conductive indium tin oxide (ITO). The backs of the solar arrays (substrate) are Kapton which is a dielectric, but can also be coated with ITO. The solar array cover-glass is a dielectric for all cases studied.

Referring to the description on charging in GEO, the important factors that influence the levels of differential charging are the amount of dielectric material present on the spacecraft, and sun/shade effects for given substorm characteristics.

The more dielectric area that is present, the greater the levels of overall charging that may occur due to the electric fields inhibiting low-energy electrons from leaving other surfaces. However, as a result, smaller differential potentials usually develop between the dielectric surfaces and the underlying structure, or spacecraft ground. Small dielectric areas have less of an effect on the charging behavior of the spacecraft, and can result in much higher differential potentials. In order to investigate the effects of dielectric material on the levels of differential charging, several combinations of dielectric and conductive surfaces on the main spacecraft body and on the backs of the solar arrays were used in the simulations.

As the spacecraft orbits, the solar arrays will maintain a constant orientation relative to the sun, but the amount of area illuminated on the main body will change. The amount of body material illuminated will be a minimum when the solar array front surfaces are into ram, and a maximum when the solar arrays are edge on to the plasma flow. These two orientations were chosen to study sun/shade effects in GEO. The largest differential potentials will be between shaded dielectric surfaces and surfaces or structure whose potential is dominated by photoemission. The spacecraft will also experience periods of eclipse in geosynchronous orbit during the spring and fall. The lack of photoemission drives the overall charging level of the spacecraft more negative but typically decreases the levels of differential charging.

Plasma interactions with selected samples of electrically biased solar cells and array technologies will be incorporated as part of the experiment package. These surfaces will be biased up to +300 V relative to spacecraft ground and will collect electron currents readily, driving the potential of the spacecraft slightly more negative in most cases. All combinations of solar array orientations and material composition were simulated with the experimental surface biased at 0 and +300 V relative to spacecraft ground to examine the effect on the overall charging and the level of differential charging.

Also related to the operation of the scientific instruments is the proximity of any dielectric materials. Shaded dielectric areas that are near the scientific package will dominate the potential field and alter fluxes of ambient plasma particles impinging onto the instruments. Simulations were run with the solar arrays positioned .44 and 1.5 meters away from the body to examine how the charging of the array substrate affects the potential field about the scientific package. Dielectric materials on the sides of the main body will also influence the local potential field. Different combinations of dielectric and conductive surfaces on the body and the solar array substrate were used in the simulations to study this effect.

Of equal importance with all the factors discussed above is the operation of the ion thrusters. If the -15 to -20 V clamping voltage is different than the 'natural' floating potential, the net current to the spacecraft ground would no longer be zero. Thus, in order to maintain the -15 to -20 V potential, the current from the thruster system must adjust to balance the overall current. The magnitude of this current was estimated in the simulations by fixing the spacecraft ground potential to -15 V, and calculating the resulting ambient current to the spacecraft.

The ambient flux to the spacecraft in GEO is typically on the order of microamps per meter

squared which is small compared to LEO fluxes. Of greater concern when operating the ion thrusters is the level of differential charging that will develop. With the ground maintained at -15 V regardless of spacecraft material composition, huge differential potentials can develop between shaded dielectrics and ground. The level of differential charging is reported for the two solar array orientations, and all combinations of material composition on the arrays and body for a -15 V ground potential.

Differential charging can result in electrostatic discharges if the electric fields between different regions exceed breakdown thresholds. An area particularly susceptible to electrostatic discharge is the solar arrays. The charging behavior of typical solar arrays on geosynchronous spacecraft is known, under certain conditions, to form a positive or 'inverted'[2] differential between the dielectric cover-glass and the metal interconnects. The cover-glass has a relatively high electron emission and it characteristically charges less negative than the interconnect. On the basis of ground tests, inverted differentials as low as 200 to 250 V[9] may cause a discharge known as 'blowoff'[2]. The inverted differential on the solar arrays that develops is reported for all combinations of array and body materials and array orientations.

NASCAP/GEO Charging Study Results

The important results from the NASCAP/GEO charging simulations are the levels of differential charging that occur, including inverted potentials on the solar arrays, whether or not the potential field about the scientific package is dominated by the charging of shaded dielectrics, and the current that the thruster system will need to balance in order to maintain the ground potential of the spacecraft at -15 V relative to plasma. This data is presented as a function of the following spacecraft design parameters: main body surface material (all conductive, or a combination of dielectric and conductor), solar array orientation (ram and edge-on to plasma flow), solar array position (.44 and 1.5 meters from spacecraft body), solar array substrate material (dielectric or conductive), and experimental surface bias (0 and +300 V relative to spacecraft ground). These results are for a 30 V power system, negatively grounded. The characteristics of the geomagnetic substorm chosen are those given in the design guidelines document[3] for a worst-case environment; 12 keV electrons with a density of 1.12 cm^{-3} and 29.5 keV protons with a density of 0.236 cm^{-3}. A similar set of simulations were run for a total eclipse period with the solar arrays stored in the ram position.

In the main text of this report, the range of predicted differential potentials is given as a function of the design parameters. Differential potentials between the uncoated OSR and the structure, and between the Kapton solar array substrate and the structure are given. For the simulations which include sunlight, the differential potentials are reported for the ion thrusters operating and turned off. During eclipse periods, it is assumed that the thrusters will not be operating. All computer run results are tabulated in appendix C for the NASCAP/GEO study conducted.

Differential Charging Levels

In sunlight with the thrusters off, differentials in the range of 10 to 12.4 kV develop between the shaded Kapton substrate and ground. The shaded uncoated OSRs develop differential potentials in the range of 1.1 to 4 kV. With the thrusters operating, spacecraft ground was held at -15 V relative

to plasma, but the shaded dielectric areas charge as before. Differentials in the range of 20.8 to 21 kV are observed on the Kapton substrate, and 9.8 to 5.2 kV on the shaded OSRs.

The inverted potentials on the solar arrays show a wide range of magnitudes for the different combinations of spacecraft materials (thrusters off in sunlight). The highest positive differential between the solar array cover-glass and the interconnects occurs when the solar array substrate is ITO coated and OSRs are not. The solar array backs assume the ground potential and do not influence the potential field about the spacecraft to such an extent as does charged Kapton. The shaded OSRs, however, still charge highly negative driving the ground potential negative by inhibiting photoemission. For this configuration, an inverted potential in the range of +2.3 to +1.3 kV is obtained.

Figure (4) shows the development of a potential barrier in front of the solar array cover-glass for the case of a Kapton solar array substrate and uncoated OSR. The shaded dielectric Kapton charges highly negative due to a lack of photoelectron emission. The accumulated negative charge dominates the local electrostatic field inhibiting photoemission from the cover-glass, charging it negative as well.

When the thrusters are operating in sunlight, inverted potentials only form when the entire spacecraft is conductive, and then only to a 20 V magnitude. For all other material combinations, the charging of the shaded dielectric regions drive the cover-glass potential negative relative to the spacecraft ground which is maintained at -15 V.

The effects introduced by photoemission from the main spacecraft body are seen by comparing the charging results between the cases when the solar arrays are into ram (minimum illumination of the main body) and edge-on (maximum illumination). Photoemission from the side of the main body was enough to drive the potential very close to plasma ground for the case of an all conductive spacecraft. For all other material combinations, the inverted potential on the solar arrays decreased for the edge-on array case as compared to the ram case. However, increased photoemission from the main body increased the differentials between ground and the shaded regions of dielectrics which charged as negative as before.

The effect introduced by biasing the experimental surface up to +300 volts relative to spacecraft ground is to drive the floating potential more negative for most cases. For the case of an all conductive spacecraft with arrays into ram, the floating potential changed from a slightly positive value near plasma ground to -362 V when the experiment was activated. The exception to this trend occurs for the edge-on solar array simulations where the floating potential is driven less negative (although not by much) when the experiment is active for almost all material combinations. The reason for this behavior has not been investigated as of yet.

Moving the solar arrays farther from the satellite body has several effects. It increases the differential potentials between the Kapton substrate and the structure, but decreases the levels of inverted potentials which develop. This is because the shaded Kapton has less influence on the potential field about the body when the solar arrays are farther away, and therefore is not as effective in inhibiting photoemission. The body charges less negative, thus reducing the inverted potential on the solar arrays, but increasing the differential potential between ground and the Kapton.

In eclipse periods, lower levels of differential charging occurs even though the magnitude of the spacecraft ground potential is greater. Differentials in the range of 2.3 to 2.7 kV occur between the Kapton solar array substrate and the structure. Differentials in the range of .4 to 2.7 kV occur between the OSRs and the structure. Inverted potential also occur during eclipse periods. For the case of a Kapton substrate and ITO coated OSRs, an inverted potential of +1 kV is obtained.

Ambient Currents to Spacecraft with Ion Thrusters Operating

The ambient flux to the spacecraft in GEO, even at a -15 V potential, is typically on the order of microamps per meter squared which is small compared to LEO fluxes. The maximum current that the thruster system would have to balance is approximately 30 microamps negative and 10 microamps positive.

IV. Design Recommendations

The TROPIX mission objectives are geared toward measurement of the plasma properties and extended ion thruster use. Early survivability and a 'clean' plasma measurement environment from LEO through the radiation belts seem to be the main concern. Therefore, the design recommendations that follow are geared toward optimizing for the scientific package in all regimes. Spacecraft survivability in geosynchronous orbit is also designed for.

Ion thruster recommendations are based on the studies of the active control of satellite charging using ion engines conducted as part of the ATS and SERT programs. Observations of ion thruster impact on measured data from the ATS-5/6 studies are also considered. Plasma interaction recommendations are based on the present and past studies conducted on a wide range of spacecraft, and are grouped by which spacecraft subsystem design they will most affect.

Recommendations Affecting Thermal System Design:

1. Coat all spacecraft exterior surfaces with a uniformly conductive layer and tie them electrically to spacecraft ground.

   Impact: eliminate problems due to differential charging

2. Shaded dielectric regions should be avoided in GEO.

   Impact: in case the spacecraft cannot be made uniformly conductive, this will reduce differential charging

3. Dielectric surfaces should be avoided near the scientific package at geosynchronous altitudes.

   Impact: limits potential barrier effects on impinging ambient particles

4. Avoid placing dielectric surfaces near the ion thrusters at geosynchronous altitudes.

Impact: limits potential barrier suppression of thruster particle emission

Recommendations Affecting Power System Design

5. Positive grounding of the power system should be used for bus voltages above 30 V. Negative grounding of the power system is acceptable only for bus voltages below or at 30 V.

Impact: maintains the spacecraft floating potential near plasma ground

6. Incorporate an electrical isolation switch between spacecraft ground and the conductive coatings. This switch will be used to float the conductive layers in LEO, and tie them to spacecraft ground in GEO.

Impact: The ability to float the conductive coatings in LEO will approximate dielectric charging behavior which will ensure a cleaner experimental environment. While in GEO, connecting all the conductive surfaces to spacecraft ground will eliminate problems due to differential charging.

7. All conductive elements, surface and interior, should be tied to a common electrical ground when grounded.

Impact: avoids interstructural capacitance as per design guidelines document[3]

8. Electrical filters should be incorporated into all circuit designs.

Impact: protect circuits from discharge-induced upsets

Recommendations Affecting Ion Thruster Design

9. Connect at least one of the neutralizers to spacecraft ground.

Impact: operation of the neutralizer will maintain spacecraft potential within 15 volts negative of plasma ground

10. The capability of biasing the neutralizer with respect to spacecraft ground should be considered as part of the thruster design.

    Impact: spacecraft potential could be maintained at plasma ground

Recommendations Affecting Scientific Package

11. Position the solar arrays far away from the scientific package, possibly 1.5 to 2 meters.

    Impact: decrease the interaction between the solar array electric fields and the scientific package providing a cleaner experimental environment

12. The Probe booms should be perpendicular to the plane of the arrays and extend at least 2 meters from the scientific package.

    Impact: ensure that the probes measure a plasma environment undisturbed by the charging of the spacecraft in LEO

13. Coat the booms of the probes with a semi-conductor such as germanium.

    Impact: avoids charged-material-induced plasma disturbances around the probes due to differential charging in GEO

14. Incorporate an instrument to monitor potential differences between the conductive layers and spacecraft ground.

15. Scientific instruments should be calibrated to account for signatures produced by ion thruster particles.

V. Expected Charging Behavior

Low Earth Orbit Expected Charging Behavior

Following the recommendations, surfaces near the scientific package and on the backs of the solar arrays are to be dielectric in low Earth orbit. Therefore, the isolation switch between the

conductive coatings and spacecraft ground is to be open. The coatings will behave as if they are a dielectric, charging to about -1 V relative to space plasma potential. The ion thruster neutralizer is connected to spacecraft ground, maintaining a -15 V floating potential during its operation. In this configuration, all outer surfaces are effectively dielectric, except the ion thruster casing , the experimental plate, and the solar array interconnects, and will assume a -1 V potential. The solar array is positively grounded and is operating at 80 V. The solar cell interconnects are at -15 V (due to neutralizer operation) at the most positive end of the array and -95 V at the negative end relative to space plasma potential.

In sunlight, with the floating potential maintained at -15 V, the neutralizer will need to compensate for a -5.5 milliamp maximum negative current with the experimental plate biased, and a 2.9 milliamp maximum positive current with an unbiased plate. This range covers all array orientations. The electric fields from the solar arrays interact with the scientific package except when the array front surfaces are in the wake.

In eclipse, the solar arrays are inactive and the ion thrusters are no longer operating. The spacecraft attains a floating potential determined strictly by a balance of currents to its surfaces. With the experimental plate unbiased, the spacecraft floats within a couple of volts of plasma ground. With the experimental plate biased to +300 V, the spacecraft floats between -90 V and -240 V depending on how efficiently the solar array front surfaces collect ions. If the solar arrays collect ions very efficiently (as a metallic plate), the spacecraft will float at -90 V when the arrays are in the ram. The -240 V potential is attained when the solar arrays (in any orientation) make no contribution to the ion current. Note that even in the best possible case, the spacecraft will still float at -90 V relative to space plasma ground in eclipse when the experimental plate is biased to +300 V relative to spacecraft ground.

Figure (5) shows the electrostatic potential contours about the spacecraft in eclipse at a floating potential of -115 V, with the experimental plate biased to +300 V relative to spacecraft ground, and the solar arrays edge-on. Note that the contour marked 'i' extends from the solar arrays and forms a 'bottle neck' in front of the scientific package. The 'i' contour marks the area from which ion currents are collected by negatively charged surfaces which in this case are the front surfaces of the solar arrays. The biased experimental plate represents an electron collecting surface. The area from which electrons can be collected by the plate however, is limited by the 'bottle neck' which will affect the results of the experiment being performed.

Geosynchronous Orbit Expected Charging Behavior

Following the recommendations, all spacecraft surfaces are to be made conductive and tied to spacecraft ground in geosynchronous orbit. Therefore, the switch that had isolated the conductive coatings in LEO is to be closed to provide a continuous conductive path. The ion thruster neutralizer remains connected to spacecraft ground, maintaining a -15 V floating potential during its operation. In this configuration, all outer surfaces are conductive, except the solar array cover glass, and will assume the spacecraft ground potential which is maintained at -15 V by the neutralizer during sunlit portions of the orbit. The solar array is positively grounded and is operating at 80 V. The solar cell interconnects are at -15 V (due to neutralizer operation) at the most positive end of the array and -95 V at the negative end relative to space plasma potential. The charging behavior described in this section is in response to a severe geomagnetic substorm with the same characteristics as outlined in the 'NASCAP/GEO Charging Study Results' subsection of this report.

In sunlight, with the floating potential maintained at -15 V and the solar arrays into ram, the neutralizer will need to compensate for a -12 microamp current with the experimental plate biased at +300 V relative to spacecraft ground, and -.2 microamps when no bias is applied. The only differential potentials which develop are those between the dielectric solar array cover glass and the interconnects. A maximum inverted potential of 90 V develops between the cover glass and the negative end of the solar array with the experimental plate biased and unbiased.

Figure (6) shows electric potential contours for the case when the spacecraft is in sunlight and the solar arrays are into ram. The floating potential is held at -15 V, and the experimental plate is unbiased relative to spacecraft ground. The solar array cover glass charges positively relative to the conductive surfaces which compresses the electric potential field between the arrays and the main satellite body. The level of differential charging is very small however, and should not interfere too much with measurements by the scientific instruments. If the solar arrays were moved farther away from the main body, the level of differential charging would be the same, but the interference would decrease.

In sunlight with the solar arrays edge-on, the currents to the spacecraft at a floating potential of -15 V are +3.5 microamps with the experimental plate biased at +300 V, and +3.2 microamps when no bias is applied. The difference in the current as compared to the case when the arrays are into ram is caused by an increased illuminated area for the edge-on configuration. A maximum inverted potential of 85 V develops between the cover glass and the negative end of the solar array with the experimental plate biased and unbiased.

In eclipse, the severe substorm charges the spacecraft to a floating potential greater than -18 kV. Even though the floating potential is very large, only minor levels of differential charging develop between the dielectric solar array cover glass and the interconnects. With a +300 V bias on the experimental plate, the floating potential is -18476 V, with a maximum differential potential of -14 V on the solar array cover glass. With no bias on the experimental plate, a floating potential of -18400 V is reached, with a maximum differential potential of -230 V on the cover glass.

Figure (7) shows the potential contours for the case when the spacecraft is eclipse, and the experimental plate is unbiased relative to spacecraft ground. The overall charging level is large but the contours are uniform throughout most of region. The impinging distribution of ambient particles is altered by a relatively simple acceleration which can be taken into account when interpreting the scientific data. Deciphering data influenced by nonuniform electric fields caused by differential charging would be much harder.

Bibliography

1. Mandell, M.J., Davis, V.A., 'User's Guide to NASCAP/LEO (Draft),' SSS-R-85-7300-R2, S-Cubed Division of Maxwell Laboratories, Inc., 1990.
2. Mandell, M.J., Stannard, P.R., Katz, I., 'NASCAP Programmer's Reference Manual, SSS-R-84-6638, S-Cubed Division of Maxwell Laboratories, Inc., NASA Contract NAS3-22826, 1984.
3. Purvis, C.K., et.al., 'Design Guidelines for Assessing and Controlling Spacecraft Charging Effects,' NASA TP-2361, 1984.
4. Kerslake, W.R., Ignaczak, L.R., 'Development and Flight History of SERT II Spacecraft,' NASA TM-105636, AIAA Paper 92-3516.

5. 'The ATS-F Data Book,' NASA Goddard Space Flight Center, revised May 1974.

6. Rubin, A.G., Garrett, H.B., 'ATS-5 and ATS-6 Potentials During Eclipse,' SCTC-1978, NASA CP-2071, pp. 38.

7. Johnson, R.G., et.al., 'SCATHA Observations of Space Plasma Composition During a Spacecraft Charging Event,' SCTC 1980, NASA CP-2182, pp. 433.

8. Mandell, M.J., et.al, 'The Decrease in Effective Photocurents due to Saddle-Points in Electrostatic Potentials Near Differentially Charged Spacecraft, IEEE Trans. Nucl. Sci., Vol. NS-25, Dec. 1978, pp. 1313-1317.

9. Ferguson, D.C., 'The Voltage Threshold for Arcing for Solar Cells in LEO-Flight and Ground Test Results,' AIAA Paper 86-0362, Jan., 1986, NASA TM-87259.

10. Olsen, R.C., Whipple, E.C., 'Operation of the ATS-6 Ion Engines,' SCTC-1978, NASA CP-2071, pp. 59.

11. Bartlett, R.O., Purvis, C.K., 'Summary of the Two Year NASA Program for Active Control of ATS-5/6 Environmental Charging,' SCTS-1978, NASA CP-2071, pp. 44.

12. Purvis, Bartlett, DeForest, 'Active Control of Spacecraft Charging on ATS-5 and ATS-6,' SCTC-1976, NASA TMX-73537, pp. 107.

13. Goldstein, R., 'Active Control of Potential of the Geosynchronous Satellites ATS-5 and ATS-6,' SCTC-1976, NASA TMX-73537, pp. 121.

14. Whipple, E.C., Olsen, R.C., 'Importance of Differential Charging for Controlling both Natural and Induced Vehicle Potentials on ATS-5 and ATS-6,' SCTC 1980, NASA CP-2182, pp. 887.

Table 1. Drivers Affecting LEO Plasma Effect
(Row Order Signifies Level of Significance)

PHENOMENA	PRIMARY DRIVERS	MINIMIZATION
Floating Potential	Array Voltage Electrical Grounding Ram/Wake Orientation Conductive Collecting Area	Low Voltage Positive grounding Maximize Exposed Conductive Areas Tied to Spacecraft Ground
Arcing	Array Design Floating Potential Materials Properties	Low Floating Potential
Ion Sputtering	Impact Energy / Floating Potential Target Characteristics	Low Floating Potential Material Choice
Reattraction of Contaminants	Floating Potential Electric Field Focusing	Low Floating Potential Limit Ionization of neutrals
Parasitic Currents	Conductive Collecting Areas Floating Potential	Low Floating Potential Limit Exposed Conductive Areas Tied to Spacecraft Ground
Electromagnetic Interference	Arc Rate Spacecraft Size	

Table 2. Drivers Affecting GEO Plasma Effects
(Row Order Signifies Level of Significance)

PHENOMENA	PRIMARY DRIVERS	MINIMIZATION
Differential Charging	Surface Material Properties Ambient Plasma Characteritics Photoelectron Current	Make All Exterior Surfaces Conductive and Tie to Spacecraft Ground Avoid Shaded Dielectrics
Arc Discharge	Level of Differential Charging Solar Array Design Construction Techniques Surface Material Properties	Make All Exterior Surfaces Conductive and Tie to Spacecraft Ground
Coupling of Discharge-Induced Transients into Electronics	Level of Differential Charging Arc Discharge Rate	Electrical Filtering to Protect Circuits from Discharge-Induced Upsets
Reattraction of Contaminants	Level of Surface Charging Position and Number of Contaminant Sources Electric Field Focusing	Positioning of Contaminant Sources Away from Sensitive Areas Limit Levels of Differential Charging

Table 3. Typical Plasma Parameters for LEO and GEO

	GEO	LEO
Density [m^{-3}]	10^{6}	10^{10} to 10^{12}
Temperature [eV]	10^{3}	.1 to .3
Electron Thermal Current [A m^{-2}]	10^{-6}	10^{-4} to 10^{-2}
Ram Ion Current [A m^{-2}]	$5x10^{10}$	10^{-5} to 10^{-3}

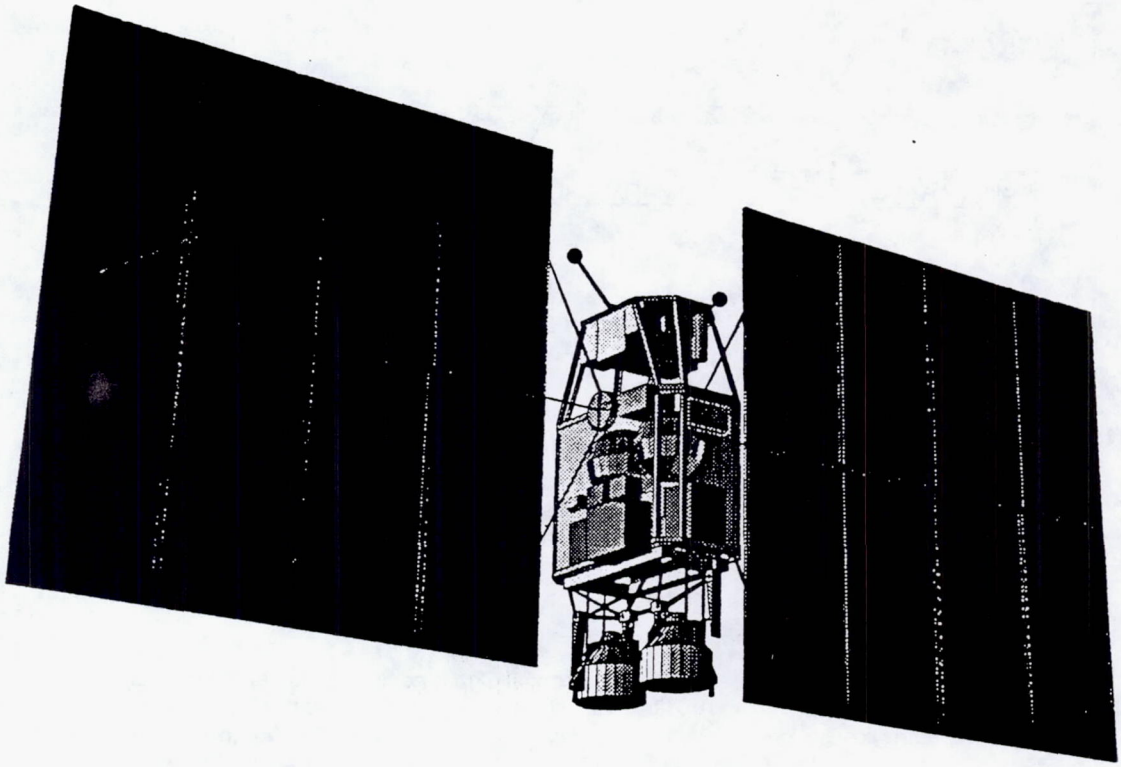

Figure 1: TROPIX spacecraft configuration

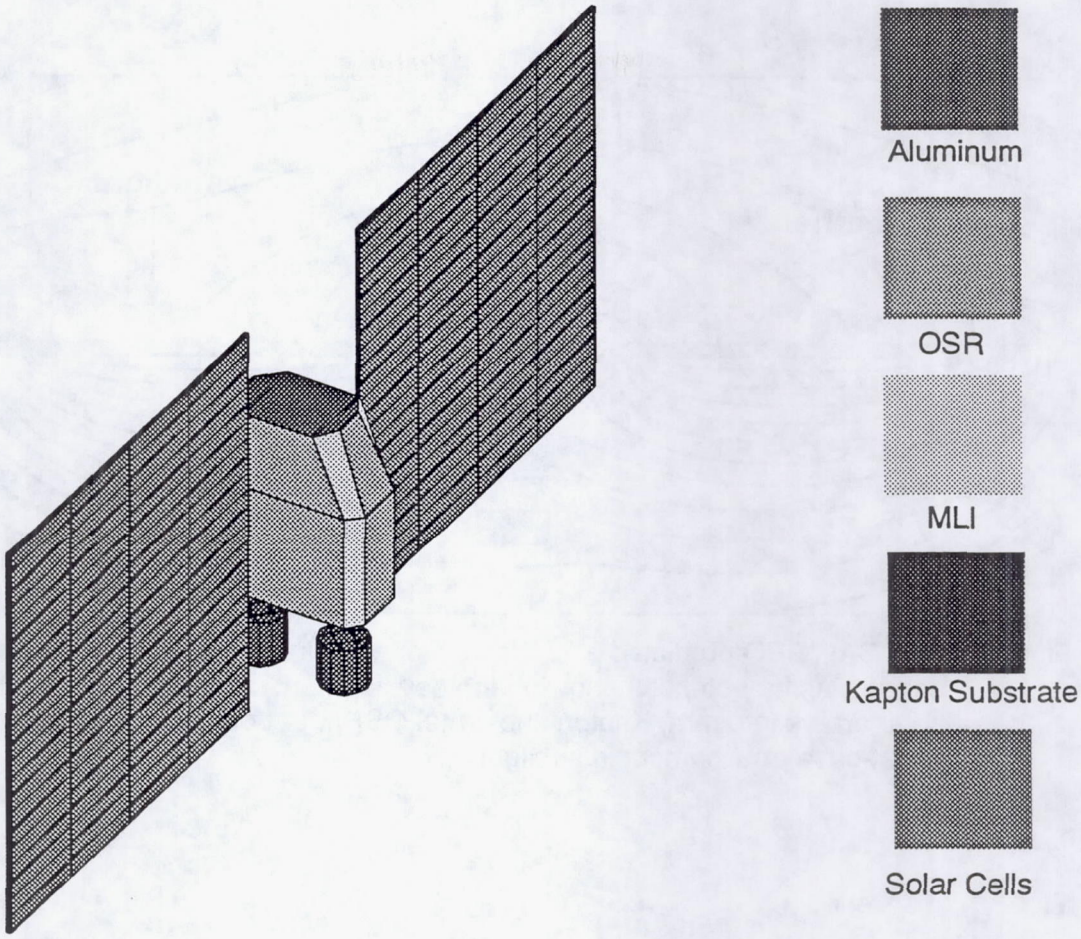

Figure 2: NASCAP/LEO TROPIX Model. Aluminum is used to simulate the conductive properties of the experiment and nozzles.

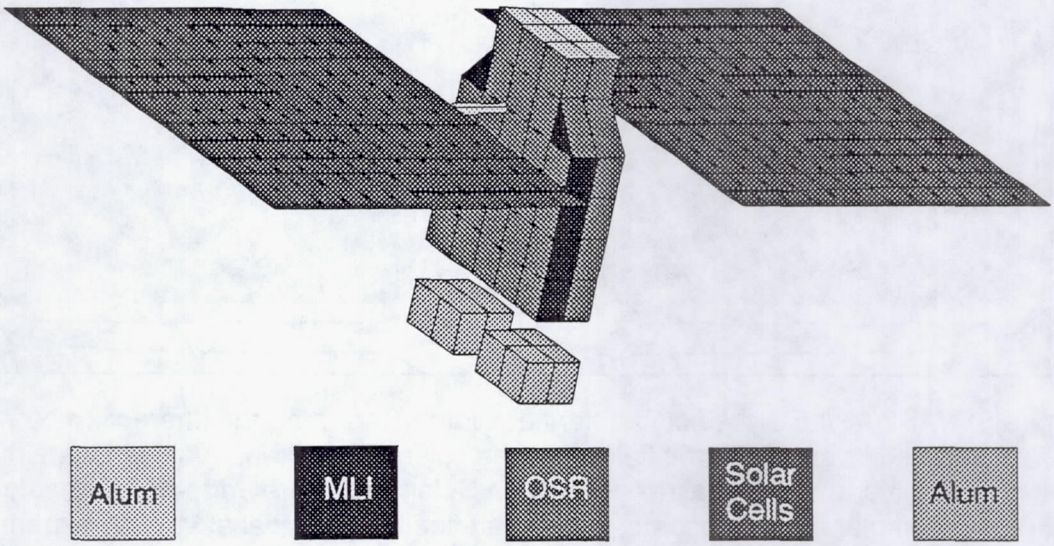

Figure 3: NASCAP/GEO TROPIX Model. Aluminum is used to simulate the conductive properties of the experiment and thrusters.

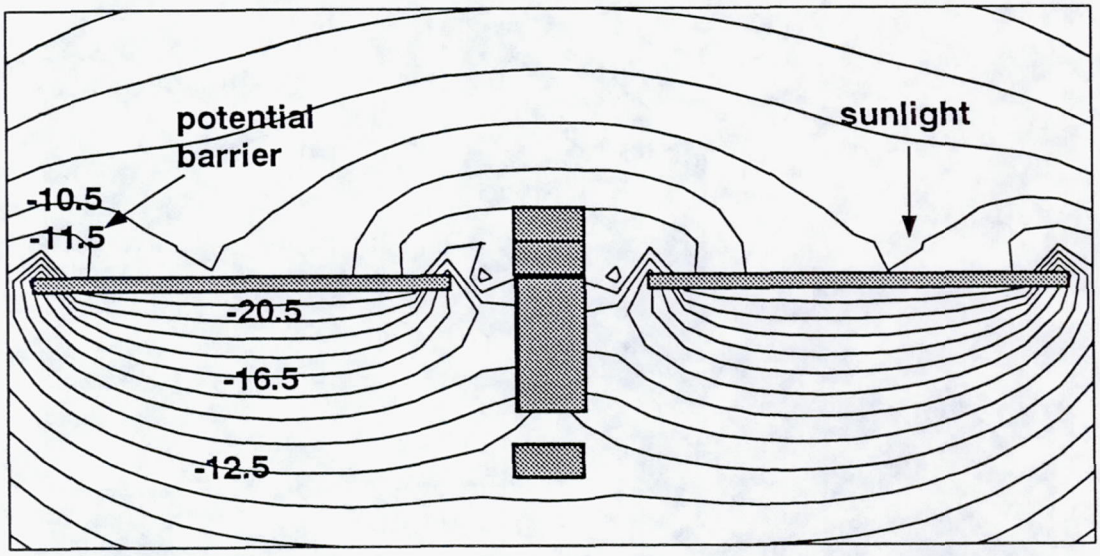

Figure 4. NASCAP/GEO predicted potential contours (values given in kV relative to space plasma potential) showing the development of a potential barrier: solar arrays into ram, Kapton substrate, OSR/MLI body, exposed to a worst-case environment in sunlight.

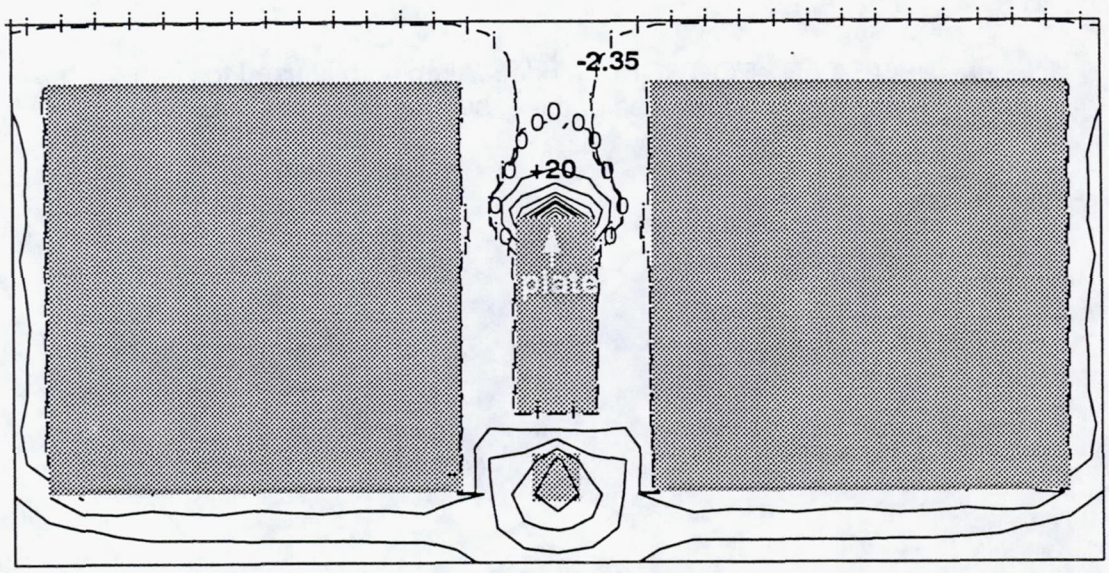

Figure 5: NASCAP/LEO predicted potential contours showing the interaction between the solar array electric fields and the scientific package (values given in V relative to space plasma potential). Solar arrays are edge-on, dielectric body and solar array substrate, spacecraft floating potential at -115 V, experimental plate biased to +300 V relative to spacecraft potential, solar arrays front surfaces metallic floating at spacecraft potential.

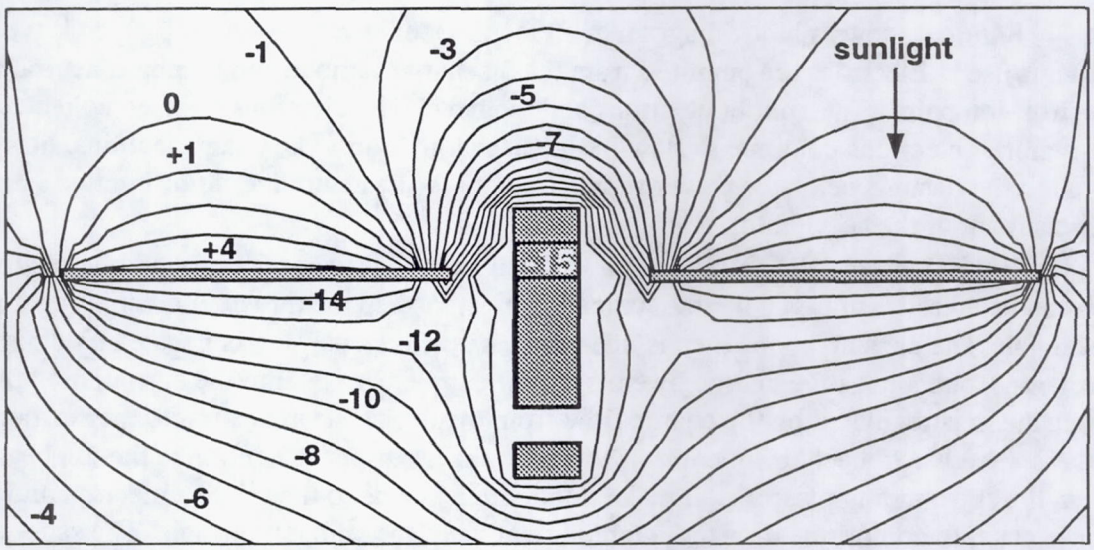

Figure 6: NASCAP/GEO predicted potential contours (values given in V relative to space plasma potential) for solar arrays into ram, floating potential held at -15 V, metallic body and solar array substrate, exposed to a worst-case substorm environment in sunlight.

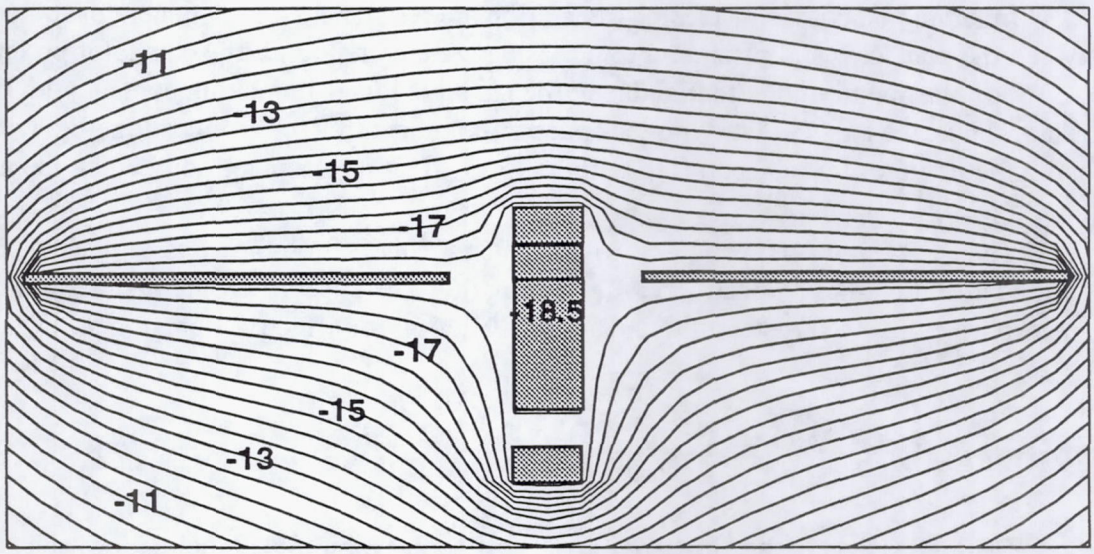

Figure 7: NASCAP/GEO predicted potential contours (values given in kV relative to space plasma potential) for solar arrays into ram, metallic body and solar array substrate, exposed to a worst-case substorm environment in eclipse.

Appendix A

Ion Thruster as a Plasma Contactor

Figure 8 shows a block diagram of an ion thruster electrical system, which is typical of all such systems used. Electrons are emmited from the discharge cathode and bombard neutral atoms creating electron-ion pairs. The emitter electrons and the new beam electrons are then collected by the anode. The emitter electrons continue to flow in the discharge loop. The beam electrons, however, flow through the beam/accelerator power supply and out to the neutralizer to be emitted into the ion beam downstream of the accelerator.

If the thruster and neutralizer are isolated from the spacecraft ground, the relative numbers of ions and electrons emitted will automatically adjust to keep the thruster potentials near plasma ground potential. The current "loop" then is one where a positive charging is negated by emission of a few extra ions, and a negative charge by emission of extra electrons into the surrounding plasma. The mechanism is regulated by the charge flow from the ion-electron beam into the surrounding plasma. Just as a feedback mechanism controls the neutralizer current to neutralize the ion beam, feedback from the surrounding plasma will make minor adjustments to the relative electron and ion fluxes that can escape, to control the thruster potential relative to the ambient plasma. The spacecraft potential will not be directly affected, as the spacecraft ground is out of the thruster-plasma current loop.

If the neutralizer is connected to spacecraft ground, the spacecraft potential will now be controlled by the neutralizer current. For instance, a highly negatively charged spacecraft would cause more neutralizer electrons to be emitted, bringing spacecraft ground up to near the plasma potential. During thruster operations, ion beam and neutralizer currents far exceed expected current collected from the surrounding plasma, so they will dominate over the ambient plasma to control floating potentials. Thus, the thrusters can act as plasma contactors to control the spacecraft floating potential if the neutralizer and spacecraft grounds are tied together.

Inherent in a contactor/plasma interaction are resistances which generate a potential difference between the contactor and plasma. From plasma contactor studies, the contactor potential drops -15 to -20 V of plasma ground potential due to the resistive losses in making contact with the surrounding plasma. Thus, we expect that tying the spacecraft and neutralizer grounds together will clamp the floating potential of the spacecraft to within -15 to -20 V of plasma ground when the neutralizer is operating.

The SERT and ATS programs investigated the use of ion thrusters as plasma contactors in the LEO and GEO regimes respectively. Reviewing those results will provide guidelines on the best way to incorporate the ion thrusters into the TROPIX design for effective charge neutralization control.

SERT II RESULTS

SERT II was launched in 1970 into a nearly polar orbit (99.1° inclination) at a 1000 km altitude (LEO). The spacecraft included two 15 cm mercury electron-bombardment ion thrusters. The primary objective of the mission was to demostrate 6 months of ion thruster system operation in space. Auxiliary investigations included a neutralizer bias experiment to control the spacecraft potential, and alternate solar array configurations to evaluate the effect on spacecraft potential. The SERT II results reviewed below were obtained from the summary by Kerslake and Ignaczak.[4]

The ion thrusters were connected to the spacecraft frame (ground). The mercury ions created within the discharge chamber were extracted and focused into a .25 A, 3000 V mercury ion beam. The ion beam was neutralized by an equal current of electrons injected from a hollow cathode neutralizer. With the ion thrusters off, the typical floating potential of the spacecraft was -6 to -12 V relative to space plasma potential and -15 to -25 V with the thrusters operating. We believe that the floating potential of the spacecraft when the thrusters were operating was controlled by the neutralizer, which wants to maintain a -15 to -25 V potential difference with respect to plasma potential.

The neutralizer was connected to ground through a power supply capable of biasing the neutralizer (±25 or ±50 V) relative to thruster common. This was done to demonstrate that the spacecraft potential could be controlled by biasing the neutralizer cathode. For instance, a -22.8 V bias of the neutralizer caused the spacecraft ground to be nearly plasma ground potential. Prior to biasing the neutralizer (zero bias), the floating potential of the spacecraft was -15 V relative to plasma ground potential. If the neutralizer were providing all the electron current to or from the spacecraft, a -22.8 V bias on the neutralizer should have driven the spacecraft to +7 V. The neutralizer wants to maintain the -15 V potential difference with respect to plasma potential. However, there exists other sources of neutralization such as ambient electron neutralization of the ion beam and ambient current collection by spacecraft surfaces which alter the floating potential of the spacecraft.

The solar arrays were partitioned to provide separate power to the thrusters and housekeeping systems. The thruster solar array was configured with a center-tap ground to give an array voltage that was no more than ±37 V from ground. A switch was also incorporated that allowed the thruster solar array to be negative-end grounded. This allowed a comparison of spacecraft floating potentials of center-tap and negative-end grounding configurations. Switching the solar array from center-tap to negative-end ground shifted the floating potential from -7 V to -29 V when no ion thruster was operating. When an ion thruster was operating, no change in the floating potential was seen when the grounding of the solar arrays was switched. The normal spacecraft potential with a thruster operating was -15 to -25 V; the potential drop between the neutralizer and the plasma. In other words, we believe that it was the neutralizer that held the spacecraft floating potential constant during ion thruster operation.

The SERT II thrusters emitted some neutral mercury atoms with thermal (400 to 500 K) velocities. These atoms were a possible source of charge-exchange ions from encounters with beam ions. These would have produced a dilute plasma accelerated (0 to 50 V) radially outward from the ion beam engulfing the nearby spacecraft providing an additional current source to surfaces and thereby affecting the floating potential of the spacecraft. It is unclear as to the extent that the charge-exchange ion plasma affected the floating potential. It would depend on the flux of the generated plasma onto spacecraft surfaces as compared to ambient fluxes. In LEO, the ambient fluxes are one the order of milliamps per meter squared.

ATS-5/6 Results

The ATS-5/6 satellites were part of the Advanced Technology Satellite program during the 1960's and 70's designed to collect and confirm data for various space and space flight technologies. Ion engine experiments were conducting as part of the program with the objective of demonstrating north-south stationkeeping of a geosynchronous satellite, performing attitude maneuvers, and unloading momentum wheels.[5] Although not an original objective, active control of satellite charging using the ion engines of the ATS-5/6 spacecraft was also investigated.

A summary of the characteristics of the ATS-5 and ATS-6 is given in Table 4. The ATS-5 utilized two contact ion engines with the neutralizer filament recessed 2.5 cm inboard from the spacecraft outer shell. The ATS-6 utilized two cesium bombardment ion engines, with the neutralizing electrons being supplied by a plasma bridge neutralizer. The ATS-6 neutralizer was placed 17 cm outboard from the spacecraft outer shell.

Table 4. Spacecraft Characteristics Summary

	ATS-5	ATS-6
Orbit	launched Aug. 1969, 105° W longitude	launched May 1974, 94° W, 35°E, 140° W longitude
Attitude Control	spin stablized	3-axis stabilized
Exterior Surfaces	quartz, non-conducting paint	Kapton, aluminum, quartz silicon, non-conducting paint
Ion Engines	contact	cesium bombardment
Neutralizer Type	hot wire filament electron emitter	plasma bridge
Neutralizer Placement	2.5 cm inboard	17 cm outboard

Both ion engine configurations were shown to have an effect on the potential of the spacecraft in both a low energy plasma environment and a high energy charging geomagnetic substorm. Differences in their effectiveness were a result of the placement and type of the neutralizer. In both engine configurations, the neutralizer was connected to spacecraft ground.[10]

The ATS-5 neutralizer had limited success in maintaining the floating potential of the spacecraft near space plasma ground. The reason cited to have caused this was the recessed placement of the neutralizer inboard 2.5 cm from the spacecraft outer shell. The recessed position may have suppressed the electron emission by a shielding action of the spacecraft body.[11] Evidence also suggested that a potential barrier may have existed near the neutralizer due to the differential charging of nearby dielectric surfaces. Thus it was possible that the electrons leaving the filament with energies of about 2 eV could not escape from the spacecraft because they lacked sufficient energy to penetrate the barrier. They would have been forced back to the spacecraft making no net contribution to the expelled current, or charging dielectric surfaces even more negative.[12]

The ATS-6 neutralizer, on the other hand, was placed 17 cm outboard from the spacecraft and was able to maintain the floating potential of the spacecraft near space plasma ground in all plasma conditions. (However, it should be noted that the ATS-6 ion thrusters were tested much less extensively than the ATS-5 thrusters.) The plasma source neutralization of the ATS-6 may have reduced the differential charging problem cited for the ATS-5. The neutralizer plasma provides a source of low energy ions which could have been attracted to nearby negatively charged dielectric surfaces discharging them relative to spacecraft ground. Further investigations into the differential charging behavior of the ATS-6 suggested that the neutralizer was not putting out enough ions to discharge the negatively charging dielectrics. The ion thruster could have provided the needed

additional source by forming thermal energy charge exchange ions near the beam boundary.[11,13] It is unclear as to the extent that the charge-exchange ion plasma affected the charging behavior of the spacecraft. It would depend on the flux of the generated plasma onto spacecraft surfaces as compared to ambient fluxes. In GEO, the ambient fluxes are one the order of microamps per meter squared.

The emitted electrons from the ATS-6 neutralizer also had a higher energy as compared to those of the ATS-5 (on the order of 7 eV) which may have been sufficient to penetrate a potential barrier that existed.[12]

For scientific missions, it is also important to understand the effects introduced by the operation of the ion thrusters on the characteristics of measured data. During the ATS-6 ion engine operation, higher than normal count rates of low energy ions were detected. These were thought to be the thermal energy charge exchange ions formed near the beam boundary. Since they are of low energy, their motion is greatly influenced by the local electric fields due to spacecraft charging.[13] Care must be taken to prevent the focusing of non-ambient particles toward detectors by spacecraft generated electric fields.

The differential charging problem cited for the ATS-5 could also affect particle detection. If a spacecraft is charged uniformly by a geomagnetic substorm, the lowest energy particles detected will be representative of the spacecraft potential, since they would have been accelerated by such an amount. When a source of electrons is emitted from spacecraft ground, as in the case of an ion thruster neutralizer, the spacecraft ground will become less negative while dielectric surfaces remain at their original high negative potential in the absence of an extra ion source. Potential barriers may then be formed in the line-of-sight of detectors, altering the impinging distribution of particles beyond a simple acceleration.

From the ATS-5/6 active control of satellite charging study using ion engines, the following summary can be made: "Electron emission alone can only partially discharge a negatively charged spacecraft because of the fact that negatively charged dielectric surfaces retain their negative charge. Differential charging can limit the currents from particle emitters... Simultaneous emission of both positive ions and electrons can completely discharge both the spacecraft mainframe and the dielectric surfaces."[14]

Figure 8. **30 CM ION THRUSTER SCHEMATIC**

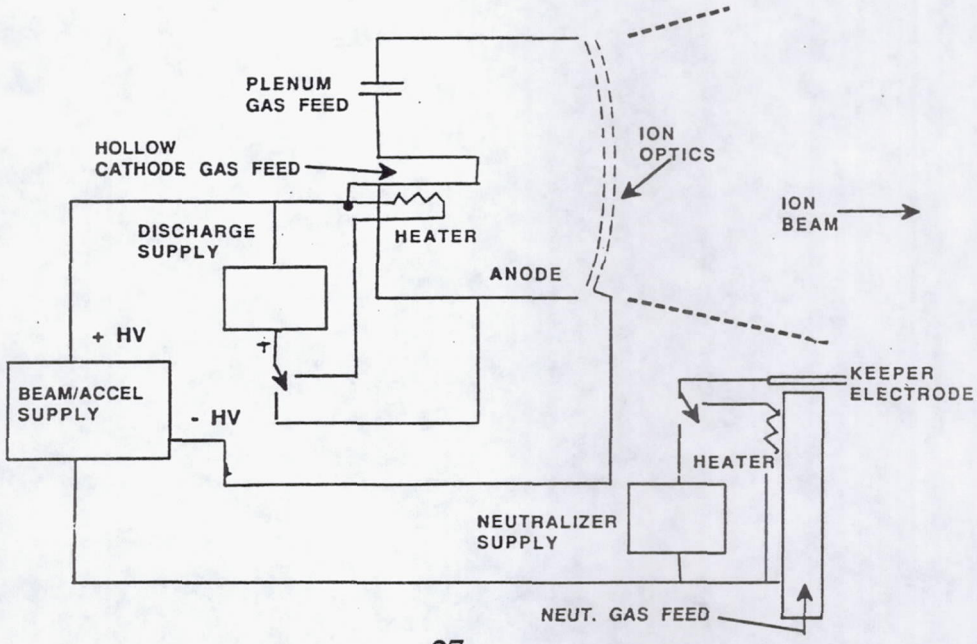

Appendix B

Tabulated NASCAP/LEO Charging Simulation Results

The following tables are arranged as follows:

Column 1: Distance between the solar arrays and the main body in meters.

Column 2: Material coating on the solar array substrate.

Column 3: Material coating combination used on main satellite body.

Column 4: The bias (with respect to S/C ground) on the experimental plate in volts.

Column 5: The S/C ground or floating potential (in volts) if the ion thrusters are not operating. This is the 'natural' floating potential referred to in the report.

Column 6: Indicates whether there is interaction between the electric fields of the solar arrays and the experimental plate. This is for the case in which the ion thrusters are operating and the S/C ground is maintained at -15 V from plasma ground.

Column 7: Amount of current (in mA) the ion thrusters must compensate for if they are to maintain the S/C ground at -15 V relative to the plasma ground.

Solar Arrays		Main Satellite Body		Space Environment Interactions		
Distance Away From S/C [m]	Back Material	Body Materials	Exp. Bias Relative to S/C Ground [V]	S/C Ground Potential [V]	Field Interaction @ S/C Ground Pot. -15 V	Current to S/C @ -15 V Ground Pot. [mA]
.36	Kapton	OSR/MLI	0	-24	Yes	-16.9
.36	Kapton	OSR/MLI	+300	-75	Yes	-21.6
.36	Kapton	ITO/MLI	0	-24	Yes	-16.6
.36	Kapton	ITO/MLI	+300	-50	Yes	-21.1
.36	MLI	OSR/MLI	0	-23	Yes	-13.7
.36	MLI	OSR/MLI	+300	-58	Yes	-19.8
.36	MLI	ITO/MLI	0	-23	Yes	-13.6
.36	MLI	ITO/MLI	+300	-48	Yes	-18.9
1.5	Kapton	OSR/MLI	0	-19	No	-10.2
1.5	Kapton	OSR/MLI	+300	-90	No	-16.17
1.5	Kapton	ITO/MLI	0	-21	No	-10.18
1.5	Kapton	ITO/MLI	+300	-55	No	-15.4
1.5	MLI	OSR/MLI	0	-18	No	-3.77
1.5	MLI	OSR/MLI	+300	-60	No	-12.56
1.5	MLI	ITO/MLI	0	-18	No	-3.68
1.5	MLI	ITO/MLI	+300	-45	No	-11.15

Table 5: Solar Arrays into ram, 30 V Bus, Negative Grounding

Solar Arrays		Main Satellite Body		Space Environment Interactions		
Distance Away From S/C [m]	Back Material	Body Materials	Exp. Bias Relative to S/C Ground [V]	S/C Ground Potential [V]	Field Interaction @ S/C Ground Pot. - 15 V	Current to S/C @ -15 V Ground Pot. [mA]
.36	Kapton	OSR/MLI	0	-23	Yes	-6.6
.36	Kapton	OSR/MLI	+300	-90	Yes	-11.
.36	Kapton	ITO/MLI	0	-23	Yes	-6.37
.36	Kapton	ITO/MLI	+300	-70	Yes	-10.3
.36	ITO	OSR/MLI	0	-20	Yes	-3.86
.36	ITO	OSR/MLI	+300	-56	Yes	-7.5
.36	ITO	ITO/MLI	0	-20	Yes	-3.84
.36	ITO	ITO/MLI	+300	-48	Yes	-7.35
1.5	Kapton	OSR/MLI	0	-22	No	-5.87
1.5	Kapton	OSR/MLI	+300	-120	No	-11.
1.5	Kapton	ITO/MLI	0	-22	No	-5.83
1.5	Kapton	ITO/MLI	+300	-78	No	-10.4
1.5	ITO	OSR/MLI	0	-20	No	-2.24
1.5	ITO	OSR/MLI	+300	-72	No	-8.75
1.5	ITO	ITO/MLI	0	-20	No	-2.2
1.5	ITO	ITO/MLI	+300	-60	No	-7.75

Table 6: Solar Array Edge into ram, 30 V Bus, Negative Grounding

Solar Arrays		Main Satellite Body		Space Environment Interactions		
Distance Away From S/C [m]	Back Material	Body Materials	Exp. Bias Relative to S/C Ground [V]	S/C Ground Potential [V]	Field Interaction @ S/C Ground Pot. of -15 V	Current to S/C @ -15 V Ground Pot. [mA]
.36	Kapton	OSR/MLI	0	-24	No	-3.41
.36	Kapton	OSR/MLI	+300	-175	No	-5.12
.36	Kapton	ITO/MLI	0	-24	Yes	-.74
.36	Kapton	ITO/MLI	+300	-48	Yes	-5.06
.36	MLI	OSR/MLI	0	<<-15	Yes	2.09
.36	MLI	OSR/MLI	+300	-60	Yes	-2.4
.36	MLI	ITO/MLI	0	<< -15	Yes	2.04
.36	MLI	ITO/MLI	+300	-42	Yes	-2.98
1.5	Kapton	OSR/MLI	0	-20	No	-1.87
1.5	Kapton	OSR/MLI	+300	-85	No	-8.21
1.5	Kapton	ITO/MLI	0	-19	No	-1.74
1.5	Kapton	ITO/MLI	+300	-50	No	-7.19
1.5	MLI	OSR/MLI	0	<< -15	No	2.34
1.5	MLI	OSR/MLI	+300	-70	No	-3.59
1.5	MLI	ITO/MLI	0	<< -15	No	2.42
1.5	MLI	ITO/MLI	+300	-40	No	-2.81

Table 7: Solar Arrays into wake, 30 V Bus, Negative Grounding

Solar Arrays		Main Satellite Body		Space Environment Interactions		
Distance Away From S/C [m]	Back Materials	Body Materials	Exp. Bias Relative tp S/C Ground [V]	S/C Ground Potential [V]	Field Interaction @ S/C Ground Pot. of - 15 V	Current to S/C @ - 15 V Ground Pot. [mA]
.36 m	Kapton	OSR/MLI	0	-49	No	-19.38
.36 m	Kapton	OSR/MLI	+300	-100	Yes	-23.46
1.5 m	Kapton	OSR/MLI	0	-48	No	-21.14
1.5 m	Kapton	OSR/MLI	+300	-120	No	-26.22

Table 8: Solar Array Edge into ram, 60 V Bus, Negative Grounding

Solar Arrays		Main Satellite Body		Space Environment Interactions		
Distance Away From S/C [m]	Back Materials	Body Materials	Exp. Bias Relative tp S/C Ground [V]	S/C Ground Potential [V]	Field Interaction @ S/C Ground Pot. of - 15 V	Current to S/C @ - 15 V Ground Pot. [mA]
.36 m	Kapton	OSR/ML	0	+2	Yes	+.97
.36 m	Kapton	OSR/MLI	+300	-70	Yes	-2.31
1.5 m	Kapton	OSR/MLI	0	+2.5	No	+1.18
1.5 m	Kapton	OSR/MLI	+300	-97	No	-4.04

Table 9: Solar Array Edge into ram, 60 V Bus, Positive Grounding

Solar Arrays		Main Satellite Body		Space Environment Interactions		
Distance Away From S/C [m]	Back Materials	Body Materials	Exp. Bias Relative tp S/C Ground [V]	S/C Ground Potential [V]	Field Interaction @ S/C Ground Pot. of - 15 V	Current to S/C @ - 15 V Ground Pot. [mA]
.36 m	Kapton	OSR/MLI	0	-90	Yes	-27.54
.36 m	Kapton	OSR/MLI	+300	-122	Yes	-36.97
1.5 m	Kapton	OSR/MLI	0	-96	No	-33.01
1.5 m	Kapton	OSR/MLI	+300	-120	No	-38.35

Table 10: Solar Array Edge into ram, 120 V Bus, Negative Grounding

Solar Arrays		Main Satellite Body		Space Environment Interactions		
Distance Away From S/C [m]	Back Materials	Body Materials	Exp. Bias Relative tp S/C Ground [V]	S/C Ground Potential [V]	Field Interaction @ S/C Ground Pot. of - 15 V	Current to S/C @ - 15 V Ground Pot. [mA]
.36 m	Kapton	OSR/MLI	0	+4	Yes	+1.32
.36 m	Kapton	OSR/MLI	+300	-50	Yes	-1.73
1.5 m	Kapton	OSR/MLI	0	+3	No	1.78
1.5 m	Kapton	OSR/MLI	+300	-92	No	-4.82

Table 11: Solar Array Edge into ram, 120 V Bus, Positive Grounding

Appendix C

Tabulated NASCAP/GEO Charging Simulation Results

The following tables present the results of all NASCAP/GEO computer simulations conducted for the TROPIX charging study. The tables are arranged as follows:

Column 1: Distance between the solar arrays and the main body in meters.

Column 2: Material coating on the solar array substrate. Kapton denotes a dielectric material while ITO means that the Kapton is coated by a layer of conductive indium tin oxide.

Column 3: Material used on the spacecraft body. OSR/MLI is a dielectric OSR, conductive MLI combination. ITO/MLI is a completely conductive body.

Column 4: The bias (with respect to S/C ground) on the experimental plate in volts.

In tables 12, 13, and 14 the remaining columns are the potentials and differential potentials obtained by the various surfaces and spacecraft ground. The differential potentials are the absolute magnitudes of the surface potential minus the spacecraft ground potential. A zero value means that the surface was coated by conductive ITO and assumes the potential of the ground. The inverted potentials are presented with a plus or minus to signify the cover-glass potential relative to the exposed interconnect potential. In tables 15 and 16, only the differential potentials are given since the spacecraft ground is maintained at -15 V. The currents are those to the experimental surface and those to the rest of the spacecraft body which the ion thruster will have to compensate for.

Solar Arrays		Main Satellite Body		Space Environment Interactions					
Position Away From S/C [m]	Substrate Material	Body Surface Material	Exp.Bias Relative to S/C Ground [V]	S/C Ground Potential [V]	Invert. Pot. on Solar Array [V]	Solar Array Substrate Charging [V]		Optical Solar Reflector Charging [V]	
						Differ. Potential	Potential	Differ. Potential	Potential
.44	Kapton	OSR/MLI	0	-12540.	+1550.	9990.	-22530.	3150.	-15690.
.44	Kapton	OSR/MLI	+300	-12875.	+1895	9625.	-22500.	2915.	-15790.
.44	Kapton	ITO/MLI	0	-12043.	+1193.	10547.	-22590.	0.	-12043.
.44	Kapton	ITO/MLI	+300	-12520.	+1520	10240.	-22760.	0.	-12520.
.44	ITO	OSR/MLI	0	-4900	+2108.	0.	-4900.	3404.	-8304.
.44	ITO	OSR/MLI	+300	-5379	+2347.	0.	-5379.	3236.	-8615.
.44	ITO	ITO/MLI	0	-103.	+72.	0.	-103.	0.	-103.
.44	ITO	ITO/MLI	+300	-431	+229.	0.	-431.	0.	-431.
1.5	Kapton	OSR/MLI	0	-11944	+649	10526.	-22470.	1196.	-13140.
1.5	Kapton	OSR/MLI	+300	-12258.	+968.	10222.	-22480.	1112.	-13370.
1.5	Kapton	ITO/MLI	0	-10650.	-440.	11920.	-22570.	0.	-10650.
1.5	Kapton	ITO/MLI	+300	-10901.	-219.	11679.	-22580.	0.	-10901.
1.5	ITO	OSR/MLI	0	-4405	+1807.	0.	-4405.	3579.	-7984.
1.5	ITO	OSR/MLI	+300	-4777.	+1981.	0.	-4777.	3447.	-8223.
1.5	ITO	ITO/MLI	0	+.03	+4.6	0.	+.03	0.	+.03
1.5	ITO	ITO/MLI	+300	-362.	+182.6	0.	-362.	0.	-362.

Table 12. Predicted charging behavior of the TROPIX NASCAP/GEO spacecraft with solar array front surfaces into ram, a 30 V bus, negatively grounded, exposed to a worst-case substorm environment in sunlight.

Solar Arrays		Main Satellite Body		Space Environment Interactions					
Position Away From S/C [m]	Substrate Material	Body Surface Material	Exp.Bias Relative to S/C Ground [V]	S/C Ground Potential [V]	Invert. Pot. on Solar Array [V]	Solar Array Substrate Charging [V]		Optical Solar Reflector Charging [V]	
						Differ. Potential	Potential	Differ. Potential	Potential
.44	Kapton	OSR/MLI	0	-11622.	+712.	10918.	-22540.	3688.	-15310.
.44	Kapton	OSR/MLI	+300	-11608.	+708	10932	-22540.	3682	-15290.
.44	Kapton	ITO/MLI	0	-10260.	-280.	12280.	-22540.	0.	-10260.
.44	Kapton	ITO/MLI	+300	-10229.	-301.	12311.	-22540.	0.	-10299.
.44	ITO	OSR/MLI	0	-4630.	+1917.	0.	-4630.	3494.	-8124.
.44	ITO	OSR/MLI	+300	-4635.	+1922.	0.	-4635.	3493.	-8128.
.44	ITO	ITO/MLI	0	+.18	+4.4	0.	+.18	0.	+.18
.44	ITO	ITO/MLI	+300	+.18	+4.4	0.	+.18	0.	+.18
1.5	Kapton	OSR/MLI	0	-11620.	+360.	10910.	-22530.	1280.	-12900.
1.5	Kapton	OSR/MLI	+300	-11610.	+360.	10920.	-22530.	1280.	-12890.
1.5	Kapton	ITO/MLI	0	-10192.	-828.	12338.	-22530.	0.	-10192
1.5	Kapton	ITO/MLI	+300	-10158.	-852.	12372.	-22530.	0.	-10158
1.5	ITO	OSR/MLI	0	-3362.	+1344.	0.	-3362.	3957.	-7319.
1.5	ITO	OSR/MLI	+300	-3351.	+1342.	0.	-3351.	3961.	-7312.
1.5	ITO	ITO/MLI	0	+.49	+4.	0.	+.49	0.	+.49
1.5	ITO	ITO/MLI	+300	+.49	+4.	0.	+.49	0.	+.49

Table 13. Predicted charging behavior of the TROPIX NASCAP/GEO spacecraft with solar arrays edge-on, a 30 V bus, negatively grounded, exposed to a worst-case substorm environment in sunlight.

Solar Arrays		Main Satellite Body		Space Environment Interactions					
Position Away From S/C [m]	Substrate Material	Body Surface Material	Exp.Bias Relative to S/C Ground [V]	S/C Ground Potential [V]	Invert. Pot. on Solar Array [V]	Solar Array Substrate Charging [V]		Optical Solar Reflector Charging [V]	
						Differ. Potential	Potential	Differ. Potential	Potential
.44	Kapton	OSR/MLI	0	-19288.	+668.	2732.	-22020.	2732.	-22020.
.44	Kapton	OSR/MLI	+300	-19313.	+673.	2727.	-22040.	2727.	-22040.
.44	Kapton	ITO/MLI	0	-19531.	+831.	2559.	-22090.	0.	-19531.
.44	Kapton	ITO/MLI	+300	-19538.	+828.	2552.	-22090.	0.	-19538.
.44	ITO	OSR/MLI	0	-18111.	+371.	0.	-18111.	519.	-18630.
.44	ITO	OSR/MLI	+300	-18114.	+364.	0.	-18114.	516.	-18630.
.44	ITO	ITO/MLI	0	-18372.	+2.	0.	-18372.	0.	-18372.
.44	ITO	ITO/MLI	+300	-18377.	+3.	0.	-18377.	0.	-18377.
1.5	Kapton	OSR/MLI	0	-19565.	+845.	2525.	-22090.	2525.	-22090.
1.5	Kapton	OSR/MLI	+300	-19570.	+850.	2520.	-22090.	2520.	-22090.
1.5	Kapton	ITO/MLI	0	-19839.	+1019.	2341.	-22180.	0.	-19839.
1.5	Kapton	ITO/MLI	+300	-19846.	+1026.	2334.	-22180.	0.	-19846.
1.5	ITO	OSR/MLI	0	-18316.	+406.	0.	-18316.	374.	-18690.
1.5	ITO	OSR/MLI	+300	-18320.	+410.	0.	-18320.	370.	-18690.
1.5	ITO	ITO/MLI	0	-18542.	+2.	0.	-18542.	0.	-18542.
1.5	ITO	ITO/MLI	+300	-18546.	+4.	0.	-18546.	0.	-18546.

Table 14. Predicted charging behavior of the TROPIX NASCAP/GEO spacecraft with solar array front surfaces into ram, exposed to a worst-casesubstorm environment in eclipse.

Solar Arrays		Main Satellite Body		Space Environment Interactions				
Position Away From S/C [m]	Substrate Material	Body Surface Material	Exp.Bias Relative to S/C Ground [V]	Solar Array Cover Glass Charging [V] Differ. Pot	Solar Array Substrate Charging [V] Differ.Pot	Optical Solar Reflector Charging [V] Differ. Pot	Current to S/C [μA] Body	Current to S/C [μA] Exper.
.44	Kapton	OSR/MLI	0	-10235.	-21075.	-9970.	-4.3	-.61
.44	Kapton	OSR/MLI	+300	-10235.	-21075.	-9970.	-4.3	-.62
.44	Kapton	ITO/MLI	0	-9661.	-20995.	0.	-10.5	-.61
.44	Kapton	ITO/MLI	+300	-9661.	-20995.	0.	-10.5	-.62
.44	ITO	OSR/MLI	0	-1166.	0.	-5249.	-29.4	-.61
.44	ITO	OSR/MLI	+300	-1146.	0.	-5249.	-29.4	-.62
.44	ITO	ITO/MLI	0	+20.	0.	0.	-11.4	+11.2
.44	ITO	ITO/MLI	+300	+20.	0.		-11.4	-.62
1.5	Kapton	OSR/MLI	0	-9762.	-20765.	-5249.	-4.6	-.52
1.5	Kapton	OSR/MLI	+300	-9759.	-20765.	-5249.	-4.6	-.54
1.5	Kapton	ITO/MLI	0	-9639.	-20765.	0.	-10.	-.52
1.5	Kapton	ITO/MLI	+300	-9639.	-20765.	0.	-10.	-.54
1.5	ITO	OSR/MLI	0	-322.	0.	-5249.	-29.9	-.52
1.5	ITO	OSR/MLI	+300	-318.	0.	-5249.	-29.9	-.54
1.5	ITO	ITO/MLI	0	+20.	0.	0.	-9.1	+9.7
1.5	ITO	ITO/MLI	+300	+20.	0.	0.	-9.1	-.54

Table 15. Predicted charging behavior of the TROPIX NASCAP/GEO spacecraft with spacecraft ground potential held at -15 V by ion thruster operation. Solar array front surfaces are into ram, 30 V bus, negatively grounded, exposed to a worst-case substorm environment in sunlight.

Solar Arrays		Main Satellite Body		Space Environment Interactions				
Position Away From S/C [m]	Substrate Material	Body Surface Material	Exp.Bias Relative to S/C Ground [V]	Solar Array Cover Glass Charging [V] Differ. Pot	Solar Array Substrate Charging [V] Differ.Pot	Optical Solar Reflector Charging [V] Differ. Pot	Current to S/C [μA] Body	Current to S/C [μA] Exper.
.44	Kapton	OSR/MLI	0	-10095	-20855.	-9797.	-4.3	-.61
.44	Kapton	OSR/MLI	+300	-10075.	-20855.	-9791.	-4.3	-.62
.44	Kapton	ITO/MLI	0	-9696.	-20855.	0.	-10.4	-.61
.44	Kapton	ITO/MLI	+300	-9695.	-20855.	0.	-10.4	-.62
.44	ITO	OSR/MLI	0	-1451.	0.	-5249.	-29.4	-.61
.44	ITO	OSR/MLI	+300	-1446.	0.	-5249.	-29.4	-.62
.44	ITO	ITO/MLI	0	+20.	0.	0.	+3.9	-.39
.44	ITO	ITO/MLI	+300	+20.	0.		+3.9	-.62
1.5	Kapton	OSR/MLI	0	-9852.	-20995.	-5249.	-4.6	-.52
1.5	Kapton	OSR/MLI	+300	-9851.	-20995.	-5249.	-4.6	-.54
1.5	Kapton	ITO/MLI	0	-9753.	-20995.	0.	-10.	-.52
1.5	Kapton	ITO/MLI	+300	-9752.	-20995.	0.	-10.	-.54
1.5	ITO	OSR/MLI	0	-270.	0.	-5249.	-29.9	-.52
1.5	ITO	OSR/MLI	+300	-268.	0.	-5249.	-29.9	-.54
1.5	ITO	ITO/MLI	0	+20.	0.	0.	+10.4	.34
1.5	ITO	ITO/MLI	+300	+20.	0.	0.	+10.4	-.54

Table 16. Predicted charging behavior of the TROPIX NASCAP/GEO spacecraft with spacecraft ground potential held at -15 V by ion thruster operation. Solar arrays edge-on, 30 V bus, negatively grounded, exposed to a worst-case substorm environment in sunlight.

REPORT DOCUMENTATION PAGE

Form Approved
OMB No. 0704-0188

Public reporting burden for this collection of information is estimated to average 1 hour per response, including the time for reviewing instructions, searching existing data sources, gathering and maintaining the data needed, and completing and reviewing the collection of information. Send comments regarding this burden estimate or any other aspect of this collection of information, including suggestions for reducing this burden, to Washington Headquarters Services, Directorate for Information Operations and Reports, 1215 Jefferson Davis Highway, Suite 1204, Arlington, VA 22202-4302, and to the Office of Management and Budget, Paperwork Reduction Project (0704-0188), Washington, DC 20503.

1. AGENCY USE ONLY (*Leave blank*)	2. REPORT DATE	3. REPORT TYPE AND DATES COVERED
	October 1993	Final Contractor Report

4. TITLE AND SUBTITLE

TROPIX Plasma Interactions Group Report

5. FUNDING NUMBERS

WU–506–41–52
C–NAS3–25266

6. AUTHOR(S)

Joel L. Herr and Ricaurte Chock

7. PERFORMING ORGANIZATION NAME(S) AND ADDRESS(ES)

Sverdrup Technology, Inc.
Lewis Research Center Group
2001 Aerospace Parkway
Brook Park, Ohio 44142

8. PERFORMING ORGANIZATION REPORT NUMBER

E–8169

9. SPONSORING/MONITORING AGENCY NAME(S) AND ADDRESS(ES)

National Aeronautics and Space Administration
Lewis Research Center
Cleveland, Ohio 44135–3191

10. SPONSORING/MONITORING AGENCY REPORT NUMBER

NASA CR–191149

11. SUPPLEMENTARY NOTES

Project Manager, Dale Ferguson, Power Technology Division, (216) 433–2298. Joel L. Herr, Sverdrup Technology, Inc., and Ricaurte Chock, NASA Lewis Research Center, 21000 Brookpark Road, Cleveland, Ohio 44135.

12a. DISTRIBUTION/AVAILABILITY STATEMENT

Unclassified - Unlimited
Subject Category 18

12b. DISTRIBUTION CODE

13. ABSTRACT ***(Maximum 200 words)***

The purpose of this report is to summarize the spacecraft charging analysis conducted by the plasma interactions group during the period from April 1993 to July 1993, on the proposed TROPIX spacecraft, and to make design recommendations which will limit the detrimental effects introduced by spacecraft charging. The recommendations were presented to the TROPIX study team at a Technical Review meeting held on July 15, 1993.

14. SUBJECT TERMS

TROPIX spacecraft; Spacecraft charging; Plasma interactions

15. NUMBER OF PAGES

39

16. PRICE CODE

A03

17. SECURITY CLASSIFICATION OF REPORT	18. SECURITY CLASSIFICATION OF THIS PAGE	19. SECURITY CLASSIFICATION OF ABSTRACT	20. LIMITATION OF ABSTRACT
Unclassified	Unclassified	Unclassified	