NASA-CR-199255 NSG-7500 IN-32-CR 64800

(NASA-CR-199255) COMBINED THEORY OF REFLECTANCE AND EMITTANCE SPECTROSCOPY (Pittsburgh Univ.) 12 p

N96-16570

Unclas

G3/32 0064800

P-12

2

Combined Theory of Reflectance and Emittance Spectroscopy

At visible to infrared wavelengths, interaction of electromagnetic radiation with a particulate medium involves a combination of reflection, absorption, scattering, and emission processes, each dependent on the geometry of the interaction, the physical character of the surface, and the wavelength of radiation being analyzed. Approximate analytic expressions provide a useful framework to evaluate individual components and their potential effects on spectral features.

Chapter contributed by Bruce Hapke.

In this chapter the theory in which either or both reflected sunlight and thermally emitted radiation contribute to the power received by a detector viewing a particulate medium, such as a powder in the laboratory or a planetary regolith, is considered theoretically. This theory is of considerable interest for the interpretation of data from field or spacecraft instruments that are sensitive to the near-infrared region of the spectrum, such as NIMS (near-infrared mapping spectrometer) and VIMS (visual and infrared mapping spectrometer), as well as thermal infrared detectors. Experimental and observational techniques and results are discussed extensively in several other chapters in this book.

There exists a large body of literature that treats radiation transfer in planetary and stellar atmospheres (e.g., *Chandrasekhar,* 1960; *Goody,* 1964; *Sobelov,* 1975; *Van de Hulst,* 1980), but it has not been widely recognized until recently that models based on the equation of radiative transfer also apply to powdered materials in which the particles are closely spaced. However, the exact theories require the solution of nonlinear integral equations. Since in most cases the absolute radiance received and the particle scattering properties of the surface being investigated are poorly known, exact theories are not necessarily more useful, and are much less convenient, than approximate analytical solutions.

Theoretical treatments of reflectance or emittance from a particulate medium have been published by *Vincent and Hunt* (1968), *Conel* (1969), *Emslie and Aronson* (1973), *Lumme and Bowell* (1981), and *Hapke* (1981, 1986). However, the situation when both reflectance and emittance contribute to the received signal has not been discussed. Also, most theories of emittance by powders derive only the hemispherically integrated radiance, whereas it is the directional emittance that is measured from spacecraft.

In this chapter the author's reflectance model (*Hapke,* 1981, 1986) is extended to include the effects of thermal radiation. The general approach and assumptions on which that reflectance model is based also apply here. The particles of the medium are assumed to be larger than the wavelength, irregular and randomly oriented and positioned, so that coherent and near-field effects in the radiation scattered

LIST OF SYMBOLS

ΔA: surface area
Δa: detector area
B: Planck emission function
B_o: constant term in emission function
B_l: coefficient in emission function
b: opposition effect function
b_o: amplitude of opposition effect
BRDF: bidirectional reflectance distribution function
c: speed of light
D: particle diameter
E: volume extinction coefficient
e: angle of observation
F: volume emission coefficient
f: filling factor
G: volume angular scattering coefficient
g: phase angle
H(w,x): H-function
h: Planck's constant
I: radiance
i: angle of incidence
J: incident irradiance
j: subscript indicating type of particle
K: volume absorption coefficient
k: opposition effect width parameter
$L = E\Lambda$: dimensionless emission scale height
n: number of particles per unit volume
p: average particle angular scattering function
Q_a: absorption efficiency
Q_e: extinction efficiency
Q_s: scattering efficiency
r: distance from detector
r_{dd}: bidirectional reflectance
r_{dh}: directional-hemispherical reflectance
r_{hd}: hemispherical-directional reflectance
r_{hh}: bihemispherical reflectance
S: volume scattering coefficient
s: distance
T: temperature
$u = Ez$: dimensionless distance
V: volume in medium
v: volume of particle
w: single scattering albedo
z: altitude

$\gamma = \sqrt{1 - w}$: albedo factor
ϵ: emissivity
ϵ_d: directional emissivity
ϵ_h: hemispherical emissivity
Φ: emitted integrated flux
ϕ: hemispherically integrated flux
θ: polar angle
Λ: thermal emission scale height
λ: wavelength
μ: cose
μ_o: cosi
σ: particle geometric cross section
Ω: direction
$d\Omega$: increment of solid angle
$\Delta\omega$: solid angle of detector

between particles can be neglected. An approximate solution for the emergent radiance based on the two-stream approximation to the equation of radiative transfer will be derived.

Two important omissions from this model are the effects of large-scale surface roughness and the neglect of polarization. The changes that roughness causes to the reflectance are examined in *Hapke* (1984), but the analogous theory for emittance is much more difficult and is beyond the scope of this chapter. A recent treatment is that of *Spencer* (1990). The neglect of polarization greatly simplifies the derivations and can be partially justified on the grounds that large, irregular, dielectric particles do not polarize light strongly by scattering.

2.1. DERIVATION OF THE EMITTED RADIANCE

The geometry of the model is shown schematically in Fig. 2.1. The plane surface $z = 0$ separates an empty half-space $z > 0$ from a half-space $z < 0$ filled with particles. The medium is illuminated by a collimated irradiance J; the direction to the source makes an angle i with the upward normal to the surface. The medium is observed by a detector whose line of sight, as seen from the surface, makes an angle e with the normal. The phase angle between the source and detector is denoted by g. The detector has sensitive area Δa and accepts radiation from within a solid angle $\Delta\omega$. Let

$$\mu = \cos e \tag{2.1a}$$

and

$$\mu_o = \cos i \tag{2.1b}$$

Assume that the medium is made up of different types of particles denoted by subscript j. The particles may differ because of size, composition, or other characteristics. Then the extinction, scattering, and absorption coefficients of the medium are respectively

$$E = \Sigma_j n_j \sigma_j Q_{ej} \tag{2.2a}$$

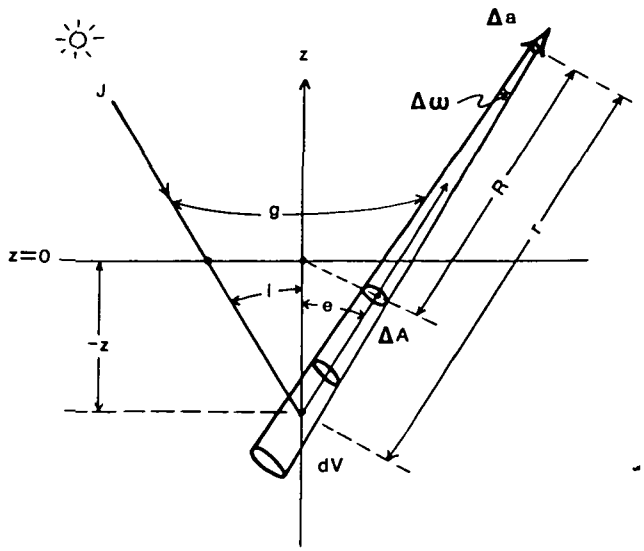

Fig. 2.1. The geometry of the model.

$$S = \Sigma_j n_j \sigma_j Q_{sj} \tag{2.2b}$$

$$K = \Sigma_j n_j \sigma_j Q_{aj} \tag{2.2c}$$

In these equations n_j is the number of particles of type j per unit volume, σ_j is the rotationally averaged geometric cross-sectional area of the jth type of particle, and Q_{ej}, Q_{sj}, and Q_{aj} denote their extinction, scattering, and absorption efficiencies, respectively.

If a particle is large compared with the wavelength λ and is isolated, then $Q_{ej} = 2$. However, when the particles are so close together that they touch, the diffracted light must be regarded as associated with the holes between the particles rather than with the particles. Because the particles are close together the light diffracted by the holes does not have sufficient space to spread appreciably before encountering a particle and therefore cannnot be distinguished from the incident, unextinguished light. Hence, for particles close together, $Q_{ej} = 1$.

Denote the angular scattering functions of each type of particle by $p_j(g)$, where $p_j(g)$ is normalized so that its integral over all solid angles is equal to 4π, and the emissivity of a particle of type j by ϵ_j. Then the angular scattering coefficient of the medium is

$$G(g) = \Sigma_j n_j \sigma_j Q_{sj} p_j(g) \tag{2.2d}$$

and the emission coefficient is

$$F = \Sigma_j n_j \sigma_j \epsilon_j \tag{2.2e}$$

The efficiencies and angular scattering functions of isolated particles are treated theoretically in several places (e.g., *Van de Hulst*, 1957; *Kerker*, 1969; *Bohren and Huffman*, 1983). Except for Q_{ej}, these quantities do not change appreciably when the particles are close together (*Hapke*, 1981). Since $Q_{sj} + Q_{aj} = Q_{ej}$, then $S + K = E$. In general, E, S, K, G, and F are functions of wavelength λ.

Let the volume of particles of type j be v_j. Then the filling factor, or fraction of the volume occupied by solid matter, is

$$f = \Sigma_j n_j v_j \tag{2.2f}$$

and the porosity is $1 - f$. Strictly speaking, the densities n_j in equations (2.2a–e) should actually be replaced by the effective density $-n_j \ln(1-f)/f$ (*Hapke*, 1986); however, this distinction will be found to have no effect on the final form of the equations except for the opposition effect, which will be discussed separately below.

Define the average properties of the medium as follows

$$\text{average single scattering albedo,} \quad w = S/E = [\Sigma_j n_j \sigma_j Q_{sj}]/[\Sigma_j n_j \sigma_j Q_{ej}] \tag{2.3a}$$

$$\text{albedo factor,} \quad \gamma = \sqrt{1-w} \tag{2.3b}$$

$$\text{average particle angular scattering function,} \quad p(g) = G(g)/S = [\Sigma_j n_j \sigma_j Q_{sj} p_j(g)]/[\Sigma_j n_j \sigma_j Q_{sj}] \tag{2.3c}$$

$$\text{average particle emissivity,} \quad \epsilon = F/E = [\Sigma_j n_j \sigma_j \epsilon_j]/[\Sigma_j n_j \sigma_j Q_{ej}] \tag{2.3d}$$

In general, the parameters w, γ, p(g), and ϵ are all functions of λ. Furthermore, it can readily be shown that $\epsilon_j = Q_{aj}$, so that

$$F = K \tag{2.3e}$$

and

$$\epsilon = K/E = 1 - w = \gamma^2 \tag{2.3f}$$

Although the detector appears to be examining an area ΔA located on the apparent surface a distance R from the detector, it is actually receiving radiation from all the particles below the surface within the cone $\Delta\omega$. Consider an increment of volume $dV = r^2 dr \Delta\omega$ located at depth z below the apparent surface and

a distance r from the detector. There are three contributions to the power received by the detector from dV: (1) radiation from the source scattered once by the particles in dV into the direction toward the detector; (2) radiation thermally emitted by the particles in dV toward the detector; and (3) radiation that has been emitted or scattered at least once, impinging on the particles in dV and being scattered toward the detector. After the radiation emerges from dV it is exponentially attenuated as it traverses the medium on its way to the surface.

Thus, the power received by the detector can be written mathematically in the following form

$$\Delta P = \int_{r=R}^{\infty} \left[J e^{-E|z|/\mu_0} \frac{G(g)}{4\pi} + \frac{F}{\pi} B(T) + \int_{4\pi} I(z,\Omega') \frac{G(g')}{4\pi} d\Omega' \right] e^{-E|z|/\mu} \, dV \frac{\Delta a}{r^2} = \int_{r=R}^{\infty} \left[J e^{-E|z|/\mu_0} wp(g) + 4\epsilon B(T) + w \int_{4\pi} I(z,\Omega') p(g') d\Omega' \right] e^{-E|z|/\mu} \, Er^2 dr \Delta\omega \frac{\Delta a}{4\pi r^2} \quad (2.4)$$

where B(T) = is the Planck blackbody thermal emission function

$$B(T) = \frac{2\pi hc^2}{\lambda^5} \left(e^{hc/\lambda\kappa T} - 1\right)^{-1} \quad (2.5)$$

T(z) is the temperature, h is Planck's constant, c is the speed of light, κ is Boltzmann's constant, $I(z,\Omega)$ is the radiance in the medium at position z traveling into direction Ω of radiation that has been emitted or scattered at least once, and g' is the angle between directions Ω' and Ω. Note that B(T) is the power emitted per unit area, so that the power emitted per unit area per unit solid angle is $B(T)/\pi$. Equation (2.4) assumes that the emittance of each particle is isotropic, which will be true for an ensemble of randomly oriented particles even though they may not necessarily scatter isotropically.

Now, the reciprocal of E has units of distance and is known as the extinction length. Let

$$u = Ez \quad (2.6)$$

that is, u is the dimensionless altitude above or below the apparent surface measured in units of the extinction length. Then, since $dr = -dz/\mu$, the radiance at the detector emerging from the surface can be written

$$I(i,e,g) = \frac{\Delta P}{\Delta a \Delta\omega} = \frac{1}{4\pi} \int_{-\infty}^{0} \left[Jwp(g) e^{u/\mu_0} + 4\gamma^2 B(T) + w \int_{4\pi} I(u,\Omega') p(g') d\Omega' \right] e^{u/\mu} \frac{du}{\mu} \quad (2.7)$$

where it has been explicitly recognized that z and u are negative over the integral.

Since the temperature is a function of altitude z, the thermal emission function B(T) is also a function of z and can be written B(z). Expression (2.7) will be evaluated under the condition that B(z) can be approximated by

$$B(z) = B_0 + B_1 e^{-|z|/\Lambda} \quad (2.8a)$$

or

$$B(u) = B_0 + B_1 e^{-|u|/L} \quad (2.8b)$$

where Λ is a thermal emission scale height, and $L = E\Lambda$. Both B_0 and B_1 are functions of λ. This expression is sufficiently general that it can describe a subsurface temperature distribution containing a thermal gradient, yet is simple enough that an analytic solution can be obtained using the two-stream method. For instance, $B(0) = B_0 + B_1$, $B(-\infty) = B_0$, and $(\partial B/\partial z)|_{z=0} = (\partial B/\partial T)|_{z=0} (dT/dz)|_{z=0} = -B_1/\Lambda$.

The first two terms in the integrand of equation (7) can be evaluated directly. The two-stream approximation to the equation of radiative transfer will be used to evaluate the third term. Including a collimated source and thermal emission, the equation of radiative transfer is

$$\frac{dI(z,\Omega)}{ds} = -EI(z,\Omega) + \frac{1}{4\pi} \int_{4\pi} I(z,\Omega') G(g') d\Omega' + J e^{-E|z|/\mu_0} \frac{G(g)}{4\pi} + \frac{F}{\pi} B(z)$$

where ds is an increment of length in the direction Ω. This equation describes the changes dI that occur as a ray of radiance I traverses a distance ds parallel to direction Ω in a medium that scatters, absorbs, and

emits. The first term on the right describes the energy removed from the beam, the second and third terms describe the energy added by scattering, and the last term describes the contribution of thermal emittance.

Let θ be the angle between the upward normal and ds (Fig. 2.2), so that $ds = dz\sec\theta$. Dividing through by E and putting $du = Edz$, the radiative transfer equation can be written in the form

$$\cos\theta \frac{dI(u,\Omega)}{du} = -I(u,\Omega) + \frac{w}{4\pi}\int_{4\pi} I(u,\Omega')p(g')d\Omega' + J\frac{w}{4\pi}p(g)e^{u/\mu_0} + \frac{\gamma^2}{\pi}B(u) \qquad (2.9)$$

Now, the third term in the integrand of equation (2.7) refers to the multiply scattered component of the radiance field in the medium. This term will be much less sensitive to p(g) than the first term, as can be seen by the following. Suppose p(g) scatters light much more strongly in the backward direction than in the forward. Then I will be stronger in the upward direction than if p(g) were isotropic; however, this excess will be preferentially scattered downward when I interacts with p(g), so that the effects of the anisotropy on the third term will approximately cancel each other.

Hence, in the first approximation, provided the departures from isotropy in p(g) are not too great, in equation (2.7) we may put

$$\int_{4\pi} I(u\Omega')p(g')d\Omega' \simeq \int_{4\pi} I_i(u\Omega')d\Omega' \qquad (2.10)$$

where $I_i(u,\Omega)$ is the solution of equation (2.9) for isotropic scattering. If the scatterers are isotropic, p(g) = 1, and equation (2.9) is

$$\cos\theta \frac{dI_i(u\Omega')}{du} = -I_i(u\Omega') + \frac{w}{4\pi}\int_{4\pi} I_i(u\Omega')d\Omega' + J\frac{w}{4\pi}e^{u/\mu_0} + \frac{\gamma^2}{\pi}B(u) \qquad (2.11)$$

Using the two-stream method for solving equation (2.11), the equation is integrated separately over the upward-going and downward-going hemispheres, and I_i is replaced by its appropriate average in the integrals. Thus, let ϕ_U and ϕ_D be the integrated power per unit area traveling into the upward and downward directions, respectively

$$\phi_U(u) = \int_{\Omega_U} I_i(u\Omega')d\Omega' = \int_0^{\pi/2} I_i(u\Omega)2\pi\sin\theta d\theta$$

$$\phi_D(u) = \int_{\Omega_D} I_i(u\Omega')d\Omega' = \int_{\pi/2}^{\pi} I_i(u\Omega)2\pi\sin\theta d\theta$$

Then the average upward and downward radiances are $\langle I\rangle_U = \phi_U/2\pi$, and $\langle I\rangle_D = \phi_D/2\pi$. Integrating equation (2.11) over Ω_U, the upward hemisphere of Ω, and replacing I by its appropriate average gives

$$\frac{1}{2}\frac{d\phi_U(u)}{du} = -\phi_U(u) + \frac{w}{2}[\phi_U(u) + \phi_D(u)] + J\frac{w}{2}e^{u/\mu_0} + 2\gamma^2 B(u) \qquad (2.12a)$$

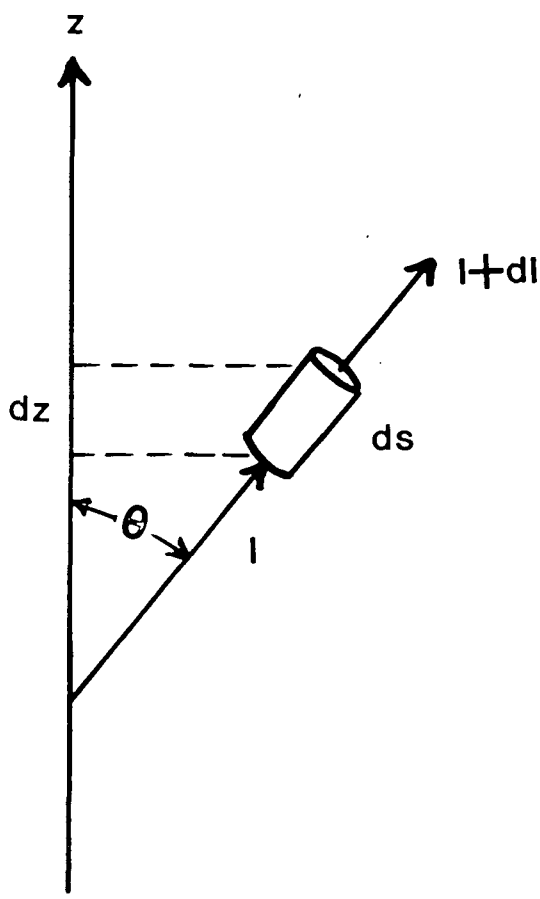

Fig. 2.2. The equation of radiative transfer describes the changes dI that occur in the beam of radiant energy as it traverses the cylinder of length ds.

Doing the same over Ω_D gives

$$-\frac{1}{2}\frac{d\phi_D(u)}{du} = -\phi_D(u) + \frac{w}{2}[\phi_U(u) + \phi_D(u)] + J\frac{w}{2}e^{u/\mu_o} + 2\gamma^2 B(u) \qquad (2.12b)$$

The solution of equations (2.12) is facilitated by letting

$$\phi(u) = \phi_U(u) + \phi_D(u) \qquad (2.13a)$$

$$\Delta\phi(u) = \phi_U(u) - \phi_D(u) \qquad (2.13b)$$

or

$$\phi_U = [\phi + \Delta\phi]/2 \qquad (2.13c)$$

$$\phi_D = [\phi - \Delta\phi]/2 \qquad (2.13d)$$

Adding (2.12a) and (2.12b) gives

$$\frac{1}{2}\frac{d\Delta\phi}{du} = -(1 - w)\phi + Jwe^{u/\mu_o} + 4\gamma^2 B \qquad (2.14a)$$

and subtracting gives

$$\frac{1}{2}\frac{d\phi}{du} = -\Delta\phi \qquad (2.14b)$$

Differentiating (2.14b) gives

$$\frac{1}{2}\frac{d^2\phi}{du^2} = -\frac{d\Delta\phi}{du}$$

Substituting this result into (2.14a) gives

$$-\frac{1}{2}\frac{d^2\phi}{du^2} = -\gamma^2\phi + Jwe^{u/\mu_o} + 4\gamma^2 B \qquad (2.15)$$

The boundary conditions on ϕ are that the radiance vanishes at $u = -\infty$

$$\phi(-\infty) = 0 \qquad (2.16a)$$

and that there are no diffuse sources above the surface, so that

$$\phi_D(0) = [\phi(0) - \Delta\phi(0)]/2 = 0 \qquad (2.16b)$$

or

$$\phi(0) + \frac{1}{2}\frac{d\phi}{du}(0) = 0 \qquad (2.16c)$$

The solution of equation (2.15) with B(u) of the form of equation (2.8) and these boundary conditions is

$$\phi(u) = A_1 e^{2\gamma u} + A_2 e^{u/\mu_o} + A_3 + A_4 e^{u/L} \qquad (2.17)$$

where

$$A_1 = -\frac{1}{1+\gamma}\left[Jw(1 + 2\mu_o)\frac{2\mu_o}{4\mu_o^2\gamma^2 - 1} + 4B_o + 4B_1(1 + 2L)\frac{2L\gamma^2}{4L^2\gamma^2 - 1}\right] \qquad (2.18a)$$

$$A_2 = Jw\frac{4\mu_o^2}{4\mu_o^2\gamma^2 - 1} \qquad (2.18b)$$

$$A_3 = 4B_o \qquad (2.18c)$$

$$A_4 = 4B_1\frac{4L^2\gamma^2}{4L^2\gamma^2 - 1} \qquad (2.18d)$$

Now, in the two-stream approximation, $\int_{4\pi} I_i d\Omega' = \phi$. Using equation (2.10) and inserting equation (2.15) into equation (2.7) gives

$$I(i,e,g) = \frac{1}{4\pi\mu}\int_{-\infty}^{0}\left\{Jw[p(g) - 1]e^{u/\mu_o} + \phi - \frac{1}{4}\frac{d^2\phi}{du^2}\right\}e^{u/\mu_o}du$$

Inserting equations (2.17) and (2.18) into this last equation and integrating gives

$$I(i,e,g) = \frac{1}{4\pi\mu}\left\{Jw(p - 1)\left(\frac{1}{\mu_o} + \frac{1}{\mu}\right)^{-1} + A_1 w\left(2\gamma + \frac{1}{\mu}\right)^{-1} + A_2\frac{4\mu_o^2 - 1}{4\mu_o^2}\left(\frac{1}{\mu_o} + \frac{1}{\mu}\right)^{-1} + A_3\mu + A_4\frac{4L^2 - 1}{4L^2}\left(\frac{1}{L} + \frac{1}{\mu}\right)^{-1}\right\}$$

which, after a modest amount of algebra, can be put into the form

$$I(i,e,g) = J\frac{w}{4\pi}\frac{\mu_o}{\mu_o+\mu}[p(g) + H(w,\mu_o)H(w,\mu) - 1] +$$

$$[\frac{B_o}{\pi}\gamma H(w,\mu) + \frac{B_1}{\pi}\frac{L}{L+\mu}\gamma^2 H(w,L)H(w,\mu)] \quad (2.19)$$

where

$$H(w,x) = \frac{1+2x}{1+2\gamma x} \quad (2.20)$$

More rigorously, the H-function defined by equation (2.20) is actually an analytic approximation to a function defined by the integral equation

$$H(w,x) = 1 + \frac{w}{2}xH(w,x)\int_0^1 \frac{H(w,y)}{x+y}dy \quad (2.21)$$

The values of this function are tabulated in *Chandrasekhar* (1960). The differences between the H function defined by equation (2.21) and the approximation (2.20) are in all cases less than 4%, which is adequate for most remote-sensing applications. Also, it can readily be shown that

$$\int_0^1 H(w,x)dx = \frac{2}{1+\gamma} \quad (2.22)$$

One further phenomenon must be considered when the medium is illuminated by a highly collimated source: the opposition effect. This effect is a sharp peak in the brightness of the scattered radiance at zero phase angle due to the hiding of extinction shadows by the particles that cast the shadows. It occurs only when the particles are large compared to the wavelength, and acts only on the singly scattered part of the radiance. Its derivation is beyond the scope of this chapter, but is discussed in detail in *Hapke* (1986). The result is that p(g) must be multiplied by a term of the form 1 + b(g), where

$$b(g) = \frac{b_o}{1+(1/k)\tan(g/2)} \quad (2.23)$$

b_o is the amplitude of the opposition effect and k is its angular half-width. These two parameters depend on the nature of p(g), porosity, and particle size distribution, and are discussed extensively in *Hapke* (1986).

Thus, the final form for the radiance received by the detector is

$$I(i,e,g) = J\frac{w}{4\pi}\frac{\mu_o}{\mu_o+\mu}\left[p(g)(1+\frac{b_o}{1+(1/k)\tan(g/2)}) + H(w,\mu_o)H(w,\mu) - 1\right] +$$

$$\left[\frac{B_o}{\pi}\gamma H(w,\mu) + \frac{B_1}{\pi}\frac{L}{L+\mu}\gamma^2 H(w,L)H(w,\mu)\right] \quad (2.24)$$

Equation (2.24) describes the directional radiance of a particulate medium illuminated by a collimated source and with a thermal emission function that can be approximated by a constant term plus an exponentially decreasing term. This radiance is the quantity that would be measured by a field spectrometer or by a detector on a spacecraft. In equation (2.24), the first term on the righthand side describes the scattered radiance received by the detector, the term proportional to p(g) describes the singly scattered light, and the remainder describe the multiply scattered light. The second term on the right describes the thermally emitted radiance.

However, the quantity that is frequently measured in the laboratory is the hemispherically integrated flux, which is the radiant power emitted per unit area into the entire upward direction. This quantity is given by

$$\Phi(i) \simeq \int_{\Omega_u} I(u=0,\Omega)\mu d\Omega = \int_0^{\pi/2} I(0,e)\mu 2\pi \sin e de$$

A useful approximation for $\Phi(i)$ for the case of isotropic scatterers, $p(g) = 1$, may be derived as follows. Because the opposition effect is so narrow, the power included in it is negligible compared with the total power radiated into the entire hemisphere and may be ignored in calculating $\Phi(i)$. Thus, using the two-stream approximation and equations (2.13c) and (2.16b),

$$\Phi(i) \simeq \Phi_U(0)\int_0^{\pi/2} \cos e \sin e\, de = \phi_U(0)/2 = \phi(0)/2$$

Substituting equations (2.17) and (2.18) into the last expression and performing a bit of algebra gives

$$\Phi(i) = J\mu_o\frac{1-\gamma}{1+2\gamma\mu_o} + \frac{2\gamma}{1+\gamma}B_o + \frac{2\gamma}{1+\gamma}\frac{2\gamma L}{1+2\gamma L}B_1 \quad (2.25)$$

$\Phi(i)$ is the quantity that would be measured by an integrating sphere in the laboratory. It is also one of

the factors that determines the temperature of a surface in radiative equilibrium. The first term on the righthand side of equation (2.25) is the power per unit area scattered into the entire upward hemisphere by the medium; the second and third terms are the thermal power emitted into this hemisphere.

2.2. REFLECTANCES, EMISSIVITIES, AND KIRCHHOFF'S LAW

2.2.1. Bidirectional Reflectance and BRDF

Several other quantities of interest for the interpretation of laboratory and remotely sensed data can be derived from equations (2.24) and (2.25). They will be discussed in this section.

The coefficient of the incident illuminance J in equation (2.24) is the bidirectional reflectance

$$r_{dd}(i,e,g) = \frac{w}{4\pi}\frac{\mu_o}{\mu_o+\mu}$$

$$\{[1 + b(g)]p(g) + H(w,\mu_o)H(w,\mu) - 1\} \qquad (2.26)$$

where b(g) is given by equation (2.23) and H(w,x) by equation (2.20). The reflectance is controlled primarily by w, the average single scattering albedo of the medium.

The bidirectional reflectance distribution function (BRDF) is the ratio of the radiance scattered from a surface to the radiant power $J\mu_o$ incident on a unit area of the surface. Hence, the BRDF is

$$\mathrm{BRDF}(i,e,g) = \frac{w}{4\pi}\frac{1}{\mu_o+\mu}$$

$$\{[1 + b(g)]p(g) + H(w,\mu_o)H(w,\mu) - 1\} \qquad (2.27)$$

2.2.2. Directional-Hemispherical Reflectance

The directional-hemispherical reflectance is the fraction of power incident from a specific direction scattered by unit surface area into all directions into the upward hemisphere. The power per unit surface area of collimated illuminance J incident from a direction making an angle i with the normal is $J\mu_o$. Hence, the directional-hemispherical reflectance is the coefficient of $J\mu_o$ in equation (2.25)

$$r_{dh}(i) = \frac{1-\gamma}{1+2\gamma\mu_o} \qquad (2.28)$$

2.2.3. Hemispherical-Directional Reflectance

It will be shown below that the directional reflectance of a medium of isotropic scatterers illuminated by a diffuse radiance I_o uniformly distributed over a hemisphere is often of interest in the measurement of thermal emissivity. Since the incident illumination is not collimated, the opposition effect can be ignored. The emergent radiance I_e (e) under these conditions may be calculated from the reflectance portion of equation (2.24), with p(g) = 1 and $b_o = 0$, by letting $J = I_o d\Omega = I_o 2\pi \sin i\, di$ and integrating over i

$$I_e(e) = \int_0^{\pi/2} I_o \frac{w}{4\pi}\frac{\mu_o}{\mu_o+\mu} H(w,\mu_o)H(w,\mu)\, 2\pi \sin i\, di =$$

$$\frac{w}{2} I_o H(w,\mu)\int_0^1 H(w,\mu_o)[1 - \frac{\mu}{\mu_o+\mu}]d\mu_o =$$

$$I_o\{\frac{w}{2}H(w,\mu)\int_0^1 H(w,\mu_o)d\mu_o$$

$$-[\frac{w}{2}\mu H(w,\mu)\int_0^1 \frac{H(w,\mu_o)}{\mu_o+\mu}d\mu_o]\} \qquad (2.29)$$

Using equations (2.21) and (2.22) gives

$$I_e(e) = I_o\{(1-\gamma)H(w,\mu) - [H(w,\mu) - 1]\} = I_o[1 - \gamma H(w,\mu)]$$

The hemispherical-directional reflectance is the reflected radiance per unit incident radiance

$$r_{hd}(e) = I_e(e)/I_o = 1 - \gamma H(w,\mu) = \frac{1-\gamma}{1+2\gamma\mu} \qquad (2.30)$$

where equation (2.20) has been used for the H function. Note that r_{nd} has the same functional dependence on e as r_{dh} does on i.

2.2.4. Bihemispherical Reflectance

The bihemispherical reflectance is a theoretical quantity that is probably unobservable in practice but will be shown below to be important in the measurement and interpretation of thermal emittance. An approximate expression for the bihemispherical reflectance can be found by a two-stream solution to the equation of radiative transfer in the form of equation (2.12) for isotropic scatterers. Since we are inter-

ested only in reflectance in this section, $B = 0$. It is assumed that no collimated sources are present, so $J = 0$. Diffuse radiant flux ϕ_o is assumed to be incident on the medium from the entire hemisphere above the surface, so that boundary condition (2.16b) is replaced by $\phi_D(0) = \phi_o$. By the very straightforward calculation, the two-stream approximation for the bihemispherical reflectance is found to be

$$r_{hh} = \phi_u(0)/\phi_o = \frac{1-\gamma}{1+\gamma} \tag{2.31}$$

The bihemispherical reflectance is mathematically simple, yet is sufficiently accurate that it can be used for quantitative estimates in many radiative transfer problems. In support of the last statement, note from equation (2.28) that $r_{dh}(60°) = r_{hh}$, and from equation (2.30), $r_{hd}(60°) = r_{hh}$. Also the bidirectional reflectance of a Lambert surface is, by definition, $r_L(i) = \mu_o/\pi$; hence, if the particles scatter isotropically ($p(g) = 1$) and g is large enough that the opposition effect is negligible, then $r_{dd}(60°,60°,g)/r_L(60°) = r_{hh}$.

2.2.5. Directional Emissivity

When the temperature T of the medium is constant, $B_1 = 0$, and the radiance from a blackbody at that temperature is given by $B_o(T)/\pi$. Hence, from the thermal emittance part of equation (2.24), the directional emissivity of the medium is

$$\epsilon_d(e) = \gamma H(w,\mu) = \gamma\frac{1+2\mu}{1+2\gamma\mu} \tag{2.32}$$

If a large temperature gradient is present the emittance of the medium is given by the last two terms of equation (2.22). The blackbody emittance of the surface is then $B[T(0)] = (B_o + B_1)/\pi$. If $L = E\Lambda \gg 1$, then $\frac{L}{L+\mu}\gamma H(w,L) \simeq 1$, and the emittance is given approximately by $\epsilon_d(e)(B_o + B_1)/\pi$. In this case the emittance corresponds to that of a blackbody at the temperature of the surface multiplied by the directional emissivity. As L decreases, the effects of B_1 decrease and the emittance is influenced more and more by the emission corresponding to a body at the subsurface temperature B_o. However, since Λ can hardly be smaller than the thickness of a monolayer of particles, which is of the order of $1/E$, L can never be significantly smaller than unity.

2.2.6. Hemispherical Emissivity

When the temperature of the medium is constant, so that $B_1 = 0$, the hemispherically integrated flux from a blackbody at that temperature is B_o. Hence, from the emittance part of equation (2.25) the hemispherical emissivity is

$$\epsilon_h = \frac{2\gamma}{1+\gamma} \tag{2.33}$$

If there is a subsurface temperature gradient, then as with the directional emittance, if $L \gg 1$, the hemispherical emittance is $\epsilon_h(B_o + B_1) = \epsilon_h B[T(0)]$, and the effects of B_o increase as L decreases.

2.2.7. Kirchhoff's Law

Kirchhoff's Law states that the sum of the reflectance and emissivity of a surface must be unity. It is of interest to inquire as to the sense in which Kirchhoff's Law holds in a particulate medium. First, from equation (2.4f),

$$\epsilon = 1 - w \tag{2.34}$$

This expression, which shows that the sum of the average particle emissivity and single scattering albedo equals unity, is simply a statement of Kirchhoff's Law for individual particles in the medium.

Because the reflectance is often more convenient to measure in the laboratory than the emissivity, the reflectance is frequently measured and the emissivity calculated assuming Kirchhoff's Law is valid. However, because a particulate surface can be characterized by several different types of reflectances and emissivities, it is not always obvious which are the appropriate quantities to use.

Comparing equations (2.30) and (2.32) it is seen that

$$\epsilon_d(e) = 1 - r_{hd}(e) \tag{2.35}$$

Hence, in principle, if it desired to measure the directional emissivity at some angle e, the surface should be flooded with diffuse light from all directions and the hemispherical-directional reflectance measured at the same angle e. However, in practice, it is usually easier to measure the directional-hemispherical reflectance. Because $r_{hd}(e)$ and $r_{dh}(i)$ have the same dependence on their respective arguments, the directional-hemispherical reflectance $r_{dh}(i = e)$ can be used in equation (2.35) to obtain $\epsilon_d(e)$.

Similarly, comparing equations (2.31) and (2.33)

$$\epsilon_h = 2\gamma/(1+\gamma) = 1 - (1-\gamma)/(1+\gamma) = 1 - r_{hh} \tag{2.36}$$

Thus, to measure the hemispherical emissivity the bihemispherical reflectance must be measured. This

is difficult, if not impossible, to do in practice. However, as discussed in section 2.2.4, an equivalent value can be obtained by measuring r_{hd}, r_{dh}, or r_{dd}/r_L at the appropriate angles.

2.3. DISCUSSION

2.3.1. Emissivity

In this section the properties of several of the quantities derived in this chapter will be discussed, along with some applications of interest in remote sensing. In order to avoid complications it will be assumed here that the particles scatter isotropically. The parameter that controls both the scattering and emissivity properties of the surface is the single scattering albedo w. This parameter is a function of particle size, composition, and wavelength.

The variation of ϵ_h with ϵ, or equivalently, of r_{hh} with w, is shown in Fig. 2.3. Note that ϵ_h is a monotonic, nonlinear function of ϵ. The slope of the curve is very large for small ϵ, but flattens for ϵ near 1. Thus, a high spectral contrast is observed when $\epsilon \ll 1$ ($w \sim 1$), but the contrast is much smaller when $\epsilon \sim 1$ ($w \ll 1$), a point emphasized by *Conel* (1969). Unfortunately, because of the presence of restrahlen bands, most planetary regoliths have low albedos and high emissivities in the thermal infrared, so that the spectral contrast that can be observed is limited.

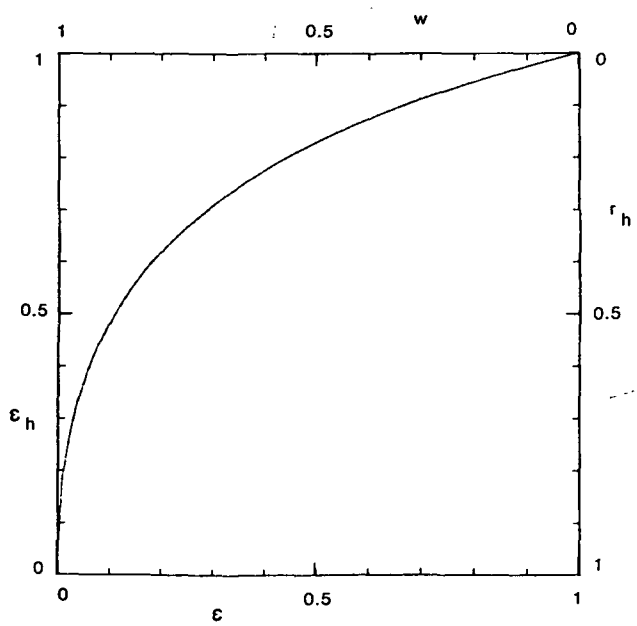

Fig. 2.3. Plot of hemispherical emissivity ϵ_h vs. particle emissivity $\epsilon = \gamma^2$ and bihemispherical reflectance r_{hh} vs. particle albedo w.

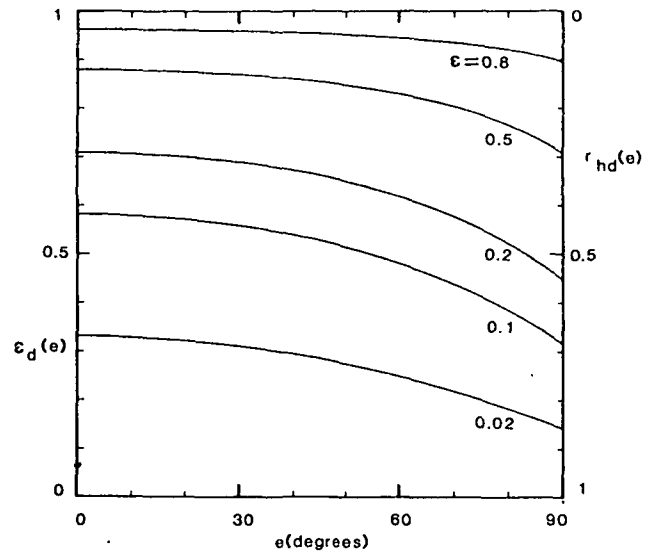

Fig. 2.4. Plot of directional emissivity ϵ_d and hemispherical-directional reflectance r_{dh} vs. angle of emergence e.

The dependence of $\epsilon_d(e)$ and $r_{hd}(e)$ on emission angle e is plotted in Fig. 2.4. When $\epsilon \simeq 1$ ($w \ll 1$), $\epsilon_d \simeq 1$ at all angles, and the surface emits like a blackbody. Hence, for dark surfaces the assumption that the emissivity is independent of angle is a good approximation. As ϵ decreases, the dependence of $\epsilon_d(e)$ on angle increases.

2.3.2. Band Contrast in Reflectance and Emittance

It is of interest to compare the amount of contrast in an absorption band when observed in reflectance and in emittance. From equation (2.26) it is seen that the bidirectional reflectance is linearly proportional to $w(\lambda)$, so that an absorption band with modest contrast in $w(\lambda)$ will cause an equal or larger contrast in reflectance. From equation (2.32) the directional emissivity is

$$\epsilon_d(\lambda,e) = \frac{\sqrt{1 - w(\lambda)}\,(1 + 2\mu)}{1 + 2\sqrt{1 - w(\lambda)}\,\mu}$$

The amount of contrast in ϵ_d depends on w and the particle size. If $w(\lambda) \ll 1$, as is often the case, then the change in $\sqrt{1 - w(\lambda)}$ with λ will not be very large. In addition, this quantity appears in both the numerator and denominator of ϵ_d, which further reduces the contrast.

Reflectance and emittance from media in which the particles are smaller than the wavelength is poorly

understood. However, *Salisbury and Eastes* (1985) have demonstrated that the number of particles per unit volume can have a dramatic effect on both the magnitude of the reflectance (and thus on the emissivity) and on the spectral contrast within a band. A very porous powder of fine particles has low reflectance and spectral contrast. This can be understood if a small particle in a low-density powder scatters light approximately as if it were isolated. In that case, $Q_s \propto (D/\lambda)^4$, while $Q_e \propto (D/\lambda)^1$, where D is the diameter (*Kerker*, 1969). Hence, $w = Q_s/Q_e \propto (D\lambda)^3 \ll 1$. Thus, $\epsilon_d(\lambda,e) \simeq 1$ and the medium radiates practically like a blackbody.

As another example, the effect of thermal emission on the contrast in absorption bands in the mid-infrared will be calculated. Suppose the spectrum of an asteroid surface at 3 AU whose regolith is at a temperature of 210 K is measured at $e = 0°$. The asteroid is illuminated by sunlight with an effective temperature of 5770 K at angle $i = 45°$. Assume that $w = 0.40$ at the center of an absorption band and $w = 0.50$ in the adjacent continuum.

Using the equations developed in this paper it is readily calculated that, if observed only in bidirectional reflectance, the band-center-to-continuum ratio is 0.72. If the band is at $\lambda = 4\ \mu m$, the thermal emittance contribution to the radiance increases this ratio by 0.04 to 0.76, so that the contrast is 24%, and the band is easily observable. However, if the band is at $\lambda = 5\ \mu m$, the thermal emittance increases this ratio by 0.24 to 0.96, so that the band contrast is only 4%, and the band is difficult to observe.

2.3.3. Radiative Equilibrium Temperature

Finally, an expression for the radiative equilibrium temperature of a particulate medium with a smooth surface will be derived. In what follows, the subscript v will denote a quantity integrated over the spectrum of visible sunlight, and the subscript IR will denote a quantity integrated over the thermal infrared.

The usual expression for radiative equilibrium is found by equating the amount of visible sunlight absorbed, taken as $J_v\mu_o(1 - A_v)$, where J_v is the illuminance of visible sunlight and A_v is a visual albedo, to the amount of infrared energy radiated, taken as $\epsilon_{IR}\sigma T_c^4$, where ϵ_{IR} is an infrared emissivity, σ is the Stefan-Boltzmann constant, and T_c is the calculated surface temperature. This gives

$$T_c = \left[\frac{J_v\mu_o(1 - A_v)}{\sigma\epsilon_{IR}}\right]^{1/4} \tag{2.37}$$

It is almost always assumed that the emitted radiance is independent of e, the angle at which the surface is observed.

A more exact calculation using the equations of this paper is as follows. The fraction of visible sunlight reflected is the directional-hemispherical albedo, so that the amount of sunlight absorbed per unit area of surface is (from equation (2.28) $J\mu_o(1 - r_{dh}) = J\mu_o\gamma_v H(w_v,\mu_o)$.

To simplify the derivation, it will be assumed that the temperature of the medium is constant. However, it should be kept in mind that this is an approximation; a more rigorous calculation would take account of the fact that the actual temperature increases into the medium. Then from equation (2.33) the amount of energy radiated into the upper hemisphere is $2B_{IR}\gamma_{IR}/(1 + \gamma_{IR})$, where B_{IR} is the Stefan–Boltzmann function σT^4 and T is the actual surface temperature.

Equating the energy absorbed to that radiated gives

$$B_{IR} = \sigma T^4 = J_v\mu_o\gamma_v H(w_v,\mu_o)(1 + \gamma_{IR})/2\gamma_{IR}$$

so that the radiative equilibrium temperature is

$$T = \left[\frac{J_v\mu_o\gamma_v H(w_v,\mu_o)(1 + \gamma_{IR})}{2\sigma\gamma_{IR}}\right]^{1/4} \tag{2.38}$$

If this surface is observed at angle e the IR radiance is

$$I_{IR}(i,e) = \frac{1}{\pi}\epsilon_d(e)B_{IR} = \frac{J_v}{2\pi}\gamma_v(1 + \gamma_v)\mu_o H(w_v,\mu_o)H(w_{IR},\mu) \tag{2.39}$$

REFERENCES

Bohren C. and Huffman D. (1983) *Absorption and Scattering of Light by Small Particles.* Wiley, New York. 530 pp.

Chandrasekhar S. (1960) *Radiative Transfer.* Dover, New York. 393 pp.

Conel J. (1969) Infrared emissivities of silicates: experimental results and a cloudy atmosphere model of spectral emission from condensed particulate mediums. *J. Geophys. Res., 74,* 1614–1634.

Emslie A. and Aaronson J. (1973) Spectral reflectance and emittance of particulate materials. 1: Theory. *Appl. Opt., 12,* 2563–2572.

Goody R. (1964) *Atmospheric Radiation I. Theoretical Basis.* Oxford, London. 436 pp.

Hapke B. (1981) Bidirectional reflectance spectroscopy, 1. Theory. *J. Geophys. Res., 86,* 3039–3054.

Hapke B. (1984) Bidirectional reflectance spectroscopy, 3. Correction for macroscopic roughness. *Icarus, 59,* 41–59.

Hapke B. (1986) Bidirectional reflectance spectroscopy, 4. The extinction coefficient and the opposition effect. *Icarus, 67,* 264–280.

Kerker M. (1969) *The Scattering of Light and Other Electromagnetic Radiation.* Academic, New York. 666 pp.

Lumme K. and Bowell E. (1981) Radiative transfer in the surfaces of airless bodies: I. Theory. *Astron. J., 86,* 1694–1704.

Salisbury J. and Eastes J. (1985) The effect of particle size and porosity on spectral contrast in the mid-infrared. *Icarus, 64,* 586–588.

Sobolev V. (1975) *Light Scattering in Planetary Atmospheres.* Pergamon, New York. 256 pp.

Spencer J. (1990) A rough-surface thermophysical model for airless planets. *Icarus, 83,* 27–38.

Van de Hulst H. (1957) *Light Scattering by Small Particles.* Wiley, New York. 470 pp.

Van de Hulst H. (1980) *Multiple Light Scattering.* Academic, New York. 436 pp.

Vincent R. and Hunt G. (1968) Infrared reflectance from mat surfaces. *Appl. Opt., 7,* 53–59.

This work is supported by a grant from the National Aeronautics and Space Administration, Office of Space Science and Applications, Planetary Geology and Geophysics Program.