N O T I C E

THIS DOCUMENT HAS BEEN REPRODUCED FROM MICROFICHE. ALTHOUGH IT IS RECOGNIZED THAT CERTAIN PORTIONS ARE ILLEGIBLE, IT IS BEING RELEASED IN THE INTEREST OF MAKING AVAILABLE AS MUCH INFORMATION AS POSSIBLE

PB2001-100139

NASA/SP–2000-534

National Aeronautics and Space Administration
Ames Research Center

Life into Space

Space Life Sciences Experiments
Ames Research Center
Kennedy Space Center
1991–1998

Including Profiles of 1996–1998 Experiments

Edited by Kenneth Souza, Guy Etheridge, Paul X. Callahan

REPRODUCED BY: NTIS
U.S. Department of Commerce
National Technical Information Service
Springfield, Virginia 22161

PROTECTED UNDER INTERNATIONAL COPYRIGHT
ALL RIGHTS RESERVED
NATIONAL TECHNICAL INFORMATION SERVICE
U.S. DEPARTMENT OF COMMERCE

Reproduced from best available copy.

Inquiries about this book can be sent to:

Life Sciences Division Office
Mail Stop 240-10
NASA Ames Research Center
Moffett Field, CA 94035

phone: 650-604-5760, fax 650-604-4503
email: bdalton@mail.arc.nasa.gov or
ssun@mail.arc.nasa.gov

PB2001-100139

Contents

Acknowledgements v

Preface vii

Introduction 1

Space Agencies: An Update 5

Studying Living Organisms in Space 17

Programs, Missions, and Payloads 25

The Space Shuttle Program

CHROMEX Payloads
- CHROMEX-01 (STS-29) 34
- CHROMEX-02 (STS-41) 38
- CHROMEX-03 (STS-54) 41
- CHROMEX-04 (STS-51) 44
- CHROMEX-05 (STS-68) 48
- CHROMEX-06 (STS-63) 50

Spacelab Life Sciences (SLS) Payloads
- SLS-1 (STS-40) 55
- SLS-2 (STS-58) 64

Physiological and Anatomical Rodent Experiment (PARE) Payloads
- PARE.01 (STS-48) 72
- PARE.02 (STS-54) 76
- PARE.03 (STS-56) 79

International Microgravity Laboratory (IML) Payloads
- IML-1 (STS-42) 85
- IML-2 (STS-65) 94

Pituitary Hormone Cell Function (PHCF) Payload
- PHCF (STS-46) 100

Spacelab-J (SL-J) Payload
- SL-J (STS-47) 107

Physiological Systems Experiment (PSE) Payloads
- PSE.02 (STS-52) 117
- PSE.03 (STS-57) 120
- PSE.04 (STS-62) 124

IMMUNE Payloads
- IMMUNE.1 (STS-60) 130
- IMMUNE.2 (STS-63) 134

NASA/NIH Collaborative Cell (NIH.C) Payloads
- NIH.C1 (STS-59) 138
- NIH.C2 (STS-66) 142
- NIH.C3 (STS-63) 146
- NIH.C4 (STS-69) 149

NASA/NIH Collaborative Rodent (NIH.R) Payloads
NIH.R1 (STS-66) 154
NIH.R2 (STS-70) 159
Biological Research in Canisters (BRIC) Payloads
BRIC-01 (STS-68) 164
BRIC-02 (STS-64) 167
BRIC-03 (STS-63) 170
BRIC-04 and -05 (STS-70) 174
BRIC-06 (STS-69) 178

NASA/Mir Program
NASA/Mir Payloads
NASA/Mir Phase 1A (STS-71/STS-74) 186

The Cosmos Program and Payloads
Cosmos 2229 (Bion 10) 196

Post-1995 Missions and Payloads 203

Appendices

Experiments 253
Publications 413
Hardware 461

Index

Subject Index 535
Author Index 551

Figures

1. Choosing a Research Subject 18
2. Spacelab/SPACEHAB 30
3. Plant Nutrient Delivery Systems 46
4. Jellyfish Life Cycle 57
5. ESA Biorack 88
6. Otolith Organs 96
7. Pituitary Gland 101
8. Frog Life Cycle 108
9. SL-J Frog Inflight Activities 113
10. Bone Development 140
11. Muscle Development 143
12. BRIC-02 Orchard Grass Assembly 169
13. Petri Dish for BRIC-04 Tobacco Hornworm Study 175
14. BRIC-05 Daylily Assembly 176
15. Mir Space Station Docked with Space Shuttle 182
16. NASA/Mir Life Sciences Experiment Schedule 184
17. Bioregenerative Life Support Systems 189
18. Mir Incubator 191
19. Cosmos Biosatellite 194
20. Portable Linear Sled 199
21. International Space Station 207

Interviews

Hangar L at Kennedy Space Center
Interview with Jerry Moyer 7

The Ethical Use of Animals in Space Life Sciences Research
Interview with Joseph Bielitzki 23

The Challenges of Plant Biology Research in Space
Interview with Abraham Krikorian 36

Biospecimen Sharing and Tissue Archiving
Interview with Paul X. Callahan 61

An Astronaut's Experiences of the SLS Missions
Interview with Rhea Seddon 67

The Growth of KSC's Life Sciences Program
Interview with Howard Levine 89

NASA Space Life Sciences in the 1990s
Interview with Joan Vernikos 110

A Cell Culture Model for Space Life Sciences Research
Interview with Herman Vandenburgh 144

Rodent Development in Microgravity
Interview with Jeffrey Alberts 156

The Challenges of Payload Science and Engineering
Interview with Deborah Wells and David Chapman 172

Space Life Sciences Hardware Development
Interview with James Connolly 200

Acknowledgements

The editors would like to thank the many individuals who contributed to *Life into Space, 1991–1998* and facilitated its completion.

The following scientists, engineers, and managers generously made themselves available to be interviewed about various aspects of space life sciences research: Jeffrey Alberts, Joseph Bielitski, Paul X. Callahan, David Chapman, James Connolly, Abraham Krikorian, Howard Levine, Jerry Moyer, Rhea Seddon, Hermán Vandenburgh, Joan Vernikos, and Deborah Wells.

A number of NASA civil servants and contractors from both Ames Research Center (ARC) and Kennedy Space Center (KSC) reviewed the manuscript and provided important commentary and suggestions. These include: (at ARC) Randall Berthold, Joseph Bielitski, James Connolly, Bonnie Dalton, Philip Davies, Paula Dumars, John Givens, Emily Holton, Joellen Jarvi, Ester Johnson, Christopher Maese, Debra Reiss-Bubenheim, Paul Savage, Ronald Schaefer, Terri Schnepp, Michael Skidmore, Galina Tverskaya, and Charles Wade; (at KSC) David Chapman, Douglas Gruendel, Howard Levine, Jerry Moyer, and Deborah Wells. Many others provided factual corrections and corroboration of information throughout the book.

The offices of the Life Sciences Data Archive at both ARC and KSC were helpful in a number of ways. At ARC, Alison French and staff provided support throughout the duration of this project by tracking down source documents, verifying information, and pointing the way to key contacts. At KSC, Elise Blaese acted as the primary researcher and writer for the portions of the book directly related to that center. She also coordinated most of the review process within KSC.

Spaceline at the National Library of Medicine was used to conduct literature searches for experiment publications. Charlotte Barton of the ARC publications group provided publication support.

In particular, we would like to thank Mains Associates for their research, writing, editorial, design, and production work on this volume: Greg Leonard for overall editorial and project management, writing, and graphics planning and editing; Richard Mains for editorial expertise, writing, and management support; Ruvanee Pietersz for writing much of the initial draft of the body text; Sharon Reynolds for research and writing, as well as editorial oversight of experiment descriptions; Karen Dodson for research and writing of experiment descriptions; Scarlett Chidgey for research and writing, as well as layout, production, and editorial support; Walter Lencki for research of flight hardware descriptions; James Kim for research and writing of experiment descriptions; Megan Kelly, Jennifer Larson, and Jack McKenna for their support as research interns; Kathy Scott for literature searches for experiment publications; Kendall Moalem for all illustrations and graphics, as well as design and production consultation; Bonnie Berry for production assistance; and Janet Perlman for the index.

Preface

When the predecessor to this book, *Life into Space: Space Life Sciences Experiments, Ames Research Center, 1965–1990*, was published in 1995, the editors and contract support team breathed a sigh of relief. That effort, which profiled missions, payloads, experiments, flight hardware, and science publications for a 25-year period, was a major challenge. Not only was it difficult to collect the older content, but it took several attempts to design a format that would cover the wide range of mission, payload, and flight hardware types. Information technology was essential for the success of that effort. Use of a simple, flexible database allowed restructuring of the content as it was acquired; this was critical for development of the book, most of which consisted of three database reports, as appendices.

Over the same period, the NASA Life Sciences Data Archive (LSDA) program began development of an information resource, which would include mission, payload, and experiment data for the three NASA centers sponsoring space life sciences experiments. In addition to providing access to the results of completed flight experiments for future life sciences investigators and payload developers to build on, it would allow reuse of valuable data sets and preserved biospecimens by investigators with new science questions, some of which would benefit from cross-mission analyses. Much of the format and content of *Life into Space, 1965–1990* were used during the design and implementation of the LSDA. Information technology also drove the evolution of the LSDA. The original CD-ROM based concept was soon overtaken by the emergence of the World Wide Web and the LSDA became operational as a major Web site in 1995.

As we now realize, a Web site, even with integrated databases, is still not a book. The LSDA Web site (http://lsda.jsc.nasa.gov) is an excellent way to display and distribute vast amounts of highly formatted information and allow regular content updates. It can reach worldwide to those who have access to the Internet. There are, however, many who still find well-organized information that tells a story and includes a good index a very welcome guide when exploring something new or verifying something once known. Our bookshelves are overflowing for good reason. However, the ARC hard copy inventory of *Life into Space, 1965–1990* is gone, and therefore, a CD-ROM "book" will be made available in early 2000. It will be optimized for both on-line reading and searching, as well as outputting to a printer. As many have noted, it is not cheap to collect, organize, and make information valuable, but once done, information technologies make it very cheap to reproduce and distribute.

This companion book, covering the 1991–1998 period, with brief profiles of the 1996–1998 missions, payloads, and experiments, is a joint publication of ARC and Kennedy Space Center (KSC). KSC is now a full participant in the LSDA, so this volume includes information beginning with their first life sciences payload in 1989. Johnson Space Center will soon publish similar books covering human space life sciences research during the same periods addressed in the *Life into Space* books. In many ways, *Life into Space* provided a partial foundation on which to build the initial LSDA, but now these books can be viewed as products of the LSDA content, with the goal of educating current and future space life scientists and the many payload developers who support them. We are very pleased to share this information with the research and education community.

The Editors:
Kenneth Souza, Chief, Life Sciences Division, Ames Research Center
Guy Etheridge, Program Manager for Flight Experiments, Kennedy Space Center
Paul X. Callahan, Manager, ARC Life Sciences Data Archiving Project

1

Introduction

We have now conducted space life sciences research for more than four decades. The continuing interest in studying the way living systems function in space derives from two main benefits of that research. First, in order for humans to engage in long-term space travel, we must understand and develop measures to counteract the most detrimental effects of space flight on biological systems. Problems in returning to the conditions on Earth must be kept to a manageable level. Second, increasing our understanding of how organisms function in the absence of gravity gives us new understanding of fundamental biological processes. This information can be used to improve human health and the quality of life on Earth.

Over the past decades, scientists have discovered that space flight has wide-ranging effects on living systems. Through millions of years of evolution, most terrestrial organisms have adapted to function optimally in the presence of a constant gravitational field. The Earth's gravitational force generally pulls body fluids toward the lower extremities. The body works against this force to maintain proper fluid distribution. In space, the absence of gravity results in an upward redistribution of fluids. The body interprets this as an overall increase of fluids volume, signaling organ systems, such as the heart and kidneys, to adjust their function accordingly. Mechanical loading of the body is nearly eliminated in the microgravity of space flight. This sets in motion a cascade of changes that affect practically every system in the body to some extent. Muscles begin to atrophy, bones become less dense, total red blood cell mass decreases, the cardiovascular system degrades, and the immune system is impaired. Additional problems arise because gravity sensors in the vestibular organs of the inner ear send information about body motion and position to the brain that conflicts with visual information from the eyes. As a result, astronauts often experience disorientation and nausea during early exposure to microgravity.

Years of research in space have also demonstrated that plants, as well as humans and animals, are affected by space flight. Cell division is decreased in space-grown plants and chromosomal abnormalities such as breakage and fusion are reported to occur more frequently in plants grown in space than in those grown on Earth. Researchers have found that changes detected by plant gravity sensors result in alterations of growth patterns, biomass production, and development in plants during space flight. Understanding these changes is critical because the ecological life support systems needed to support humans

during future long-term space travel depend on the ability to grow plants reliably and efficiently in space.

While NASA's Johnson Space Center focuses on studying astronauts in space, Ames Research Center (ARC) studies the effects on the human body and biological systems by conducting experiments primarily on animals and cellular material. In addition, ARC and Kennedy Space Center (KSC) sponsor studies of the effects of microgravity on plants. In the first 25 years of its life sciences program, between 1965 and 1990, ARC sponsored life sciences research on 25 space flight missions. In the five-year period since 1990, ARC sponsored 22 life sciences research payloads. KSC sponsored its first life sciences payload in 1989 and flew a total of 13 such payloads through 1995. This recent increase in activity can be attributed to several factors. A new emphasis on small payloads carried on the middeck of the Space Shuttle meant that researchers were able to access the space environment more frequently and at a lower cost. Because the time required for planning and preparing small payloads is relatively short, researchers were able to repeat or expand experiments on subsequent missions, giving them the opportunity to increase the scientific validity of their research. NASA expanded its collaborative life sciences research efforts with national, international, and commercial partners during these years. Agreements signed with the National Institutes of Health permitted scientists from the two agencies to pool their expertise and resources. International cooperation was fostered by the exchange of astronauts between countries and by encouraging joint research. An emphasis on making the space environment accessible to commercial users also allowed space life sciences research to flourish in recent years, as did the use of biospecimen sharing programs, which provide the life sciences research community with access to biological tissue samples from space-flown organisms.

The primary goal of this book is to profile the space life sciences research activities undertaken by ARC and KSC between 1991 and 1995. It is a companion volume to *Life into Space: Space Life Sciences Experiments, NASA Ames Research Center, 1965–1990*. The reader is referred to that volume for a general introduction to space life sciences research, descriptions of NASA and international space agencies, general descriptions of space flight experiment implementation, and information pertaining to space programs and missions that occurred prior to 1991. Changes in research programs and space agencies that occurred in the 1991–1995 period are discussed in the present volume, as is all ARC-sponsored life sciences research conducted during that period. Life sciences research sponsored by KSC was not described in the previous volume, so all KSC life sciences payload development activity prior to 1995 is included here. Because of the time required to complete experiments and publish results, those experiments conducted between 1996 and 1998 are not fully described in this volume. However, in order to ensure that more recent science information is available, ARC- and KSC-sponsored payloads flown in that period are briefly profiled at the end of Chapter 5.

Space life sciences research is defined, for the purposes of this book, as the space-based study of biological and biomedical processes using living organisms. All space flight experiments conducted by or through ARC and KSC, using microorganisms, cell cultures, plants, and animals, are discussed here. Although research on human subjects is usually conducted under the sponsorship of the Johnson Space Center, ARC did sponsor a single experiment that was conducted on the astronaut crew of

the STS-47 mission, which is described in this volume. Ground-based experiments are not described, except peripherally in instances where they serve as direct controls for flight experiments. Research conducted in the areas of exobiology, life support, and other fields related to space life sciences is not included. Studies undertaken by other NASA centers also fall beyond the scope of this book.

Chapter 2 contains updates to the life sciences research interests of the space agencies, domestic and international, that appeared in *Life into Space, 1965–1990*, as well as agencies that have since begun collaborating with NASA in this research area. Chapter 3 attempts to give the reader some idea of the processes and challenges of experimenting with living organisms in the space environment. The payload and mission descriptions in Chapter 4 comprise the main portion of the book. Each payload series is described separately, with missions within a series presented chronologically. Changes of importance to life sciences research made since 1990 to the Space Shuttle program and the Cosmos program are discussed here. The first phase of the NASA/Mir program, which began in 1995, is also described in Chapter 4. Each section ends with a list of Additional Reading for the reader who wishes more detailed information. Many sources were used in compiling descriptions of missions and payloads, such as technical and internal documentation; however, these are not cited because of their unavailability to the general public.

Chapter 5 focuses on the future directions of the space life sciences research program, with particular emphasis on NASA/Mir and the International Space Station. To further illustrate certain aspects of space life sciences research, interviews were conducted with representative individuals from both the engineering and science communities. These interviews can be found throughout the book.

For those readers with specific research interests, descriptions of individual space flight experiments are included in Appendix I. Appendix II lists selected publications relating to these experiments. Appendix III contains descriptions of the flight hardware items used to conduct these experiments.

Page intentionally left blank

2

Space Agencies: An Update

Chapter 2 of *Life into Space, 1965–1990* discussed the history of NASA's international cooperation in space life sciences, from its origins through the early 1990s. In the intervening years, the scope and character of collaborative activities undertaken by NASA Life Sciences has expanded internationally to include additional space agencies and domestically to include other federal organizations. This chapter provides an updated overview of these activities and their participants.

NASA

The budget and implementation for the U.S. space life sciences research efforts is administered by the headquarters of the National Aeronautics and Space Administration in Washington, DC. Management of research and development programs is handled by program offices that are governed by NASA headquarters.

The agency's programs are currently divided among four Strategic Enterprises. Life sciences research is implemented through the Human Exploration and Development of Space (HEDS) Enterprise, which is managed by the Office of Space Flight and the Office of Life and Microgravity Sciences (OLMSA). The Life Sciences Division at NASA headquarters falls under OLMSA's management and is responsible for all space life sciences activities. The Division seeks to advance four main objectives: to broaden human understanding of nature's processes; to explore and settle the solar system; to continue research to allow safe, healthy, and productive routine and long-duration space travel; and to enrich life on Earth by fostering knowledge and technology that enhance our health and quality of life, while expanding American scientific and mathematic accomplishments. Life sciences research using plants, animals, and cells is conducted primarily by Ames Research Center (ARC) and John F. Kennedy Space Center (KSC).

Ames Research Center

ARC is located in California's Silicon Valley, at the southern end of the San Francisco Bay. In 1994, ARC became the host of the adjacent Moffett Federal Airfield and now houses several resident civilian and military agencies. The great majority of NASA life sciences research using animals and cultured tissue is conducted under ARC sponsorship.

In addition to research in space life sciences, ARC is responsible for research in computer science and applications, computational and experimental aerodynamics, flight simulation, hypersonic aircraft, rotorcraft, powered-lift technology, human use of aeronautic and space technology, airborne and space sciences, solar system exploration, and infrared astronomy. Most recently, 1998 saw the establishment of the NASA Astrobiology Institute (NAI) at ARC. NAI brings together institutions from around the world to help answer the following questions: how did life begin and evolve; is there life elsewhere in the universe; and what is the future for life on Earth and beyond? A more detailed profile of life sciences research at ARC can be found in *Life into Space, 1965–1990*.

Kennedy Space Center

Located on the central Atlantic coast of Florida, KSC is NASA's primary base for space launch, landing, and payload processing operations. Center responsibilities include ground and support operations, prelaunch checkout, and launch of the Space Shuttle and its payloads; the landing and recovery of the Shuttle orbiter and payloads; the recovery of the reuseable solid rocket boosters; and subsequent turnaround operations in preparation for future missions. KSC also provides launch support and oversight for NASA activities related to expendable launch vehicle (ELV) missions, primarily from adjacent Cape Canaveral Air Station in Florida and Vandenberg Air Force Base in California.

KSC was established in 1961 as the launch site for the Apollo program and continues today as the primary launch site for NASA's manned and unmanned space programs. The life sciences program at KSC began in the late 1970s in anticipation of the large number of life sciences experiments planned for the coming Space Shuttle program. The center had supported life sciences experiments for both Apollo and Skylab in the early 1970s, but these studies were processed in temporary facilities. Permanent facilities for preflight experiment processing, inflight ground control activities, and postflight experiment processing would be needed to support the active life sciences payload schedule of the Shuttle.

Hangar L, an Air Force hangar located at the Cape Canaveral Air Station, was designated for conversion to the Life Sciences Support Facility. Representatives from ARC, KSC, and Johnson Space Center (JSC) contributed to the planning and design of the facility, which was completed in 1981. The launch of Space Transportation System 4 (STS-4) in June 1982 marked the first life sciences payload to be processed at Hangar L. During the late 1980s and early 1990s, additional modifications were made to Hangar L and neighboring Hangar Little L to accommodate the Advanced Life Support and Plant Space Biology ground-based research programs that began at KSC in the 1980s.

Hangar L contains facilities for use by principal investigators, as well as a variety of specialized life sciences facilities. The Animal Care Section (ACS), accredited by the Association for Assessment and Accreditation of Laboratory Animal Care, includes laboratories for performing surgical procedures and X-ray analyses, animal holding rooms equipped with cages and sinks, and changing rooms for donning and doffing protective clothing. ACS procedures for animal maintenance and handling ensure the health and safety of personnel and the animal subjects.

Aquatic laboratories located nearby are used to grow, maintain, and prepare aquatic organisms for flight experiments. Aquaria are arranged in a variety of configurations depending on investigator requirements. Smaller areas can be set up as laboratories for general science payload

Hangar L at Kennedy Space Center

Interview with Jerry Moyer

Jerry Moyer began his career at the Kennedy Space Center (KSC) with Planning Research Corporation (PRC) developing performance specifications for experiment-to-Spacelab rack payload integration. At that time, KSC did not have a permanent facility for life sciences experiment processing. Said Moyer, "They used some of the older facilities, trailers, temporary facilities throughout KSC and Cape Canaveral. But they weren't adequate in size and the capabilities weren't there to process the number and types of experiments planned for Spacelab. They lacked adequate cleanliness, and they lacked laboratory capabilities that would be needed for preflight operations, inflight ground control experiments, and postflight processing."

Moyer became lead project engineer for the Life Sciences Support Facility, also known as Hangar L, for which the design effort was already under way. "We had about two thousand engineers with PRC designing and building launch pads and the processing facilities," said Moyer. "As Hangar L really came about, they needed someone who could interact with Ames Research Center (ARC) and understand their requirements, whether it was for an isotope-rated fume hood, a certain level of cleanliness for tissue culture, or animal care facilities. I had exposure to those kinds of things as a result of my academic background."

Their design group was assigned with bringing the Hangar L budget under control. "Our requirements were at about $2.3 million," said Moyer, "and our budget was about $1.6 million. We needed surgery areas for preflight bioimplantation and other surgical procedures, an X-ray facility, experiment processing laboratories, areas for animal care and housing, an area for experimental monitoring, and more."

The Hangar L modification finished within budget. Shortly after completion, Moyer accepted a position with the Bionetics Corporation as manager for ground operations support. In this capacity he had a chance to see what the design team had done right as well as wrong. Said Moyer, "The labs were a little smaller than we would have liked, and the air conditioning system was undersized a bit, but a lot of that was driven by budget. All the equipment worked really well. It's like when you build a house, often there are things you think of afterwards that could have been done a little bit differently."

Since the facility's first use in 1982, Hangar L has contributed to the successful performance of over 67 Space Shuttle missions and over 500 individual flight experiments. Hangar L has also provided support to unmanned space exploration, such as the Mars Pathfinder, and ground research efforts supporting the development of bioregenerative life support systems.

Moyer sees life sciences ground support at KSC changing in the era of the International Space Station (ISS). "Hangar L was designed to support Spacelab missions and middeck experiments. For the Station era, we need an expanded capability and expanded facility. Things are going to be a lot different, and they're going to affect the ground operations. We're going to have 90-day flight increments and operations inflight on a continuous basis. It's not going to be as straightforward as a Shuttle launch." Currently, KSC is working on a replacement for Hangar L. Said Moyer, "Right now we're assessing requirements and working with ARC, Marshall Space Flight Center, JSC [Johnson Space Center], and NASA Headquarters to determine what the additional needs may be for the ground support." Even with the changes in experiment design for the ISS, Moyer feels that the ground activities performed during the preflight, inflight, and postflight mission phases will remain every bit as critical to experiment and mission success as the activities conducted during the space flight.

processing or as specialized laboratories for breeding or maintaining both plant and animal specimens.

The Orbiter Environmental Simulator (OES) is a modified environmental chamber used to replicate flight conditions experienced on the Space Shuttle middeck. Within the OES, ground control experiments and preflight verification tests can be conducted in an environment similar to the Shuttle middeck, apart from space flight effects. This allows scientists to rule out effects resulting from variances in temperature, humidity, and carbon dioxide.

For parallel adjustments of real-time ground control protocols, investigators have access to the Experiments Monitoring Area (EMA). The EMA provides immediate access to JSC Mission Control and to Shuttle flight data, resulting in a higher fidelity ground support for inflight experiment conditions and more meaningful scientific results.

In support of human studies, preflight experiment data are collected on crew members in the Baseline Data Collection Facility (BDCF). When the Shuttle lands at KSC, the BDCF is also used for postflight data collection. When the Shuttle lands at Edwards Air Force Base, early recovery operations are conducted in the Postflight Science Support Facility (PSSF) at Dryden Flight Research Center.

NASA Cooperative Efforts

In anticipation of the intensely collaborative International Space Station (ISS) program, NASA has, in recent years, established a number of collaborative space life sciences research ventures with other federal agencies, industry, and the international space community. In 1992, NASA first signed agreements with the National Institutes of Health (NIH) to expand joint biomedical research activities. NASA now has cooperative agreements with 12 NIH Institutes. ARC managed the science on six payloads cosponsored by the NASA Life Sciences Division and NIH between 1991 and 1995. These payloads flew on five Shuttle missions: STS-59, STS-66, STS-63, STS-69, and STS-70. By the end of the decade, NIH will have been involved in no less than six additional life sciences payloads.

Several other federal agencies currently cooperate with NASA in conducting life sciences research. With the National Science Foundation, NASA has cosponsored a research network for plant sensory systems. The purpose of the program is to support research into plant responses to environmental signals such as light, temperature, and mechanical stimulation. In the area of radiation biology, ties have been developed with the National Oceanic and Atmospheric Administration and the National Institute of Standards and Technology of the Department of Commerce, Armstrong Laboratories and the Armed Forces Radiobiology Research Institute of the Department of Defense, and the Department of Energy. Facilities for conducting ground-based experiments to supplement space flight research are offered by Loma Linda University Medical Center and Brookhaven National Laboratory. Through its network of NASA Specialized Centers of Research and Training (NSCORT), NASA creates consortia to conduct research in a particular area. Jointly funded with industry and academic partners, NSCORTs, sited at various universities around the country, are currently established in the areas of gravitational biology, exobiology, controlled ecological life support systems, space environmental health, and most recently, space radiation health.

NASA has increased its collaboration with industry partners. Five life sciences payloads were cosponsored by ARC and a corporate entity dur-

ing the 1991–1995 period, on the STS-52, STS-57, STS-62, STS-60, and STS-63 missions. Such cosponsorship is made possible through NASA's Commercial Space Center (CSC) network, as described in Chapter 4.

International Space Agencies

International cooperation in space life sciences research reached a new peak in the first half of the 1990s. Scientists from Russia, Japan, France, Germany, Canada, and the European Space Agency flew experiments onboard the Shuttle on several occasions. Astronauts from the Japanese, Russian, Canadian, Italian, European, and German space agencies flew as crew members on various life sciences-related Shuttle missions. A number of international researchers received flight tissues from Shuttle missions. Scientists and engineers from ARC and Russia collaborated closely on the Cosmos 2229 (Bion 10) biosatellite mission in 1992 and again on Bion 11 in 1996.

As a prelude to the ISS, NASA astronauts accumulated many months of operational experience conducting life sciences and other research onboard the Russian Mir space station. Planning the ISS, designing and building its structural components and science hardware, and setting its science priorities, schedules, and procedures has required a leap in the kind and extent of cooperation between the participating countries. Indeed, the operation of the Space Station will be less a demonstration of cooperation between international partners than an activity carried out by a single global space community.

With an eye to the growth of international cooperation, the International Space Life Sciences Working Group (ISLSWG) was formed in 1990 with two primary goals: to strengthen space research, and to enhance knowledge and information exchange. In recognition of the reality that the resources of individual agencies and nations are insufficient to carry out the vigorous research program appropriate in the space life sciences, the ISLSWG developed an international strategic plan. Sound planning and cooperation by the international space life sciences community will leverage resources and increase the effectiveness of interactions among scientists around the world. At this time, the primary focus of the ISLSWG is life sciences planning for ISS. Membership consists of the group's founding members: NASA, the European Space Agency (ESA), the Canadian Space Agency (CSA), the French space agency (CNES), the German space agency (DLR), and the Japanese space agency (NASDA).

Canada

The Canadian Space Agency (CSA) was officially established in 1990, although Canada had initiated an astronaut program as early as 1983, following an invitation from NASA to fly an astronaut on the Space Shuttle. CSA is responsible for promoting the peaceful use and development of space for the social and economic benefit of Canadians. Through its auspices, Canada cooperates with NASA and other international partners in the areas of satellite communications, space technology, and space life sciences research.

Canada is the largest contributor to the Space Shuttle program, outside of the U.S. CSA developed the Remote Manipulator System robotic arms used by the Shuttle fleet to release and retrieve satellites and conduct other extravehicular activities. A Canadian astronaut flew onboard

the Shuttle for the first time in 1984. Between 1991 and 1995, three additional Canadians flew on missions STS-42, STS-52, and STS-74, all of which carried life sciences payloads. Canadian and U.S. scientists have also worked together to conduct research using the space environment. A series of experiments sponsored by CSA flew in the Spacelab Life Sciences 1 (SLS-1) and International Microgravity Laboratory 2 (IML-2) payloads on the STS-40 and STS-65 missions, respectively. Canadian scientists also participated in the biospecimen sharing program that followed the flight of the SLS-1 payload on STS-40.

Cooperation between NASA and CSA since 1995 has included the flights of Canadian astronauts on the STS-77, STS-78, and STS-90 Shuttle missions as well as the participation of Canadian scientists on the STS-78 Life and Microgravity payload. CSA's Aquatic Research Facility flew on STS-77 as a cooperative effort between CSA, Ames Research Center, and Kennedy Space Center. The Canadians are also closely linked to human life sciences at NASA, with CSA astronaut David Williams currently serving as Director of Life Sciences at the Johnson Space Center.

CSA will provide two major elements to the International Space Station venture. The Mobile Servicing System, a rail-mounted robotic arm, will play a key role in ISS assembly, maintenance, and servicing. An Insect Habitat will be used within the Centrifuge Accommodation Module for life sciences research.

The European Space Agency

The European Space Agency (ESA) had its beginnings in two international organizations: the European Launcher Development Organization, created to develop and build a launcher system, and the European Space Research Organization, created to develop satellite programs. These two organizations merged in 1973 to form a single body representing the interests of Belgium, France, Germany, Italy, the Netherlands, the United Kingdom, Denmark, Spain, Sweden, and Switzerland. Ireland became a member of the union in 1975. ESA came into legal existence in 1980. Since then, the agency has been joined by Austria, Norway, and Finland. Despite its geographical separation from the ESA member nations, Canada has signed agreements that allow it to participate in some ESA programs and to sit on the ESA Council.

ESA is essentially a space research and development organization with three primary roles. First, it develops and implements a plan that covers not only microgravity research but also the fields of space science, Earth observation, telecommunications, orbiting stations and platforms, ground infrastructures, and space transport systems. Second, it coordinates its own programs with the national programs of its members. Third, it implements a policy that ensures that each member country will have fair compensation for its investment, both financially and technologically.

In order to carry out these roles effectively, ESA cooperates extensively with international partners like the U.S., Japan, and Russia. NASA has been a close partner of ESA for more than two decades, and many joint space life sciences activities have been conducted by the two space agencies. In the period between 1965 and 1990, ESA's partnership with NASA included the building of the Spacelab, the orbiting laboratory that flew regularly on the Space Shuttle until it was retired following the Neurolab mission.

European astronauts also flew on Space Shuttle missions during that period, and the two space agencies cooperated in conducting life sciences research aboard the Shuttle. ESA and NASA continued their collaboration in the 1991–1995 period. Three ESA astronauts, from Germany, Switzerland, and France, flew on a total of four Shuttle missions during this period. The Spacelab flew on the Shuttle five times between 1991 and 1995. Scientists sponsored by ESA participated in life sciences research on several Shuttle missions, including STS-40, STS-42, STS-58, and STS-65. In addition, U.S. life sciences experiments were conducted in the Biorack, a hardware unit built and owned by ESA, on the STS-42 and STS-65 missions.

ESA is also a contributor to the ISS. In October 1995, the ESA member nations agreed on its commitments to the ISS venture. ESA will contribute a pressurized laboratory known as the Columbus Orbital Facility, which will be launched on the Space Shuttle and then permanently attached to the central core of the Space Station, and the Automated Transfer Vehicle, a structure that will provide services in logistics and reboosting of the Station. ESA has also undertaken to develop a Crew Transport Vehicle for ferrying astronauts from the Station in emergencies. Other ISS elements under development by ESA include two nodes for connecting various Station components and a data management system for operating the Russian Service Module. ESA's participation in the ISS program further includes an effort to promote the Station, to prepare scientists whose research will be conducted on the Station, and to maintain and train an astronaut team.

Since 1995, ESA has continued cooperative life sciences activities with NASA, participating in research and providing astronauts and Biorack hardware for use on the STS-76, STS-81, and STS-84 NASA/Mir missions.

France

France was the third nation to achieve space launch capabilities and its space agency, CNES, founded in 1961, remains the primary space power in western Europe. The program in life sciences, which began in 1970, focuses on various research fields, including neurosciences, cardiovascular physiology, musculoskeletal physiology, gravitational biology, and exobiology. The agency flies space flight experiments through cooperation with NASA and RSA or through ESA, of which CNES is a member.

CNES and NASA created a bilateral working group in 1985 and has since collaborated on various projects, including the Rhesus Project. The Rhesus Project intended to fly two rhesus monkeys and the Rhesus Research Facility, which had been jointly developed by CNES and NASA. Originally scheduled for flight on IML-2 in 1991, the project was rescheduled for flight on SLS-3, which was cancelled because of budgetary reasons. This resulted in the termination of the project.

In 1996, French scientists had the opportunity to transfer Rhesus Project research and development to the Russian/U.S. Bion 11 mission, in which they participated in NASA's portion of the primate payload. Scientific collaboration has continued with shared experiments on the STS-90 Neurolab mission.

Germany

The German space agency, DARA, was formed in 1989 as a government owned and operated company. Its role was to manage German space activities both nationally and internationally. DARA worked in cooperation with DLR, the German aerospace research organization

formed in 1969. In 1997, DARA was dissolved and folded into DLR in a move to streamline space policy activities.

Germany channels much of its space agenda through its membership in ESA, of which it is the single largest contributor. However, Germany has a history of collaborative space flight activities with NASA. Two dedicated Spacelab missions, D-1 and D-2, flew in 1985 and 1993, respectively. Neither mission carried ARC- or KSC-managed experiments. German hardware flew as part of the International Microgravity Laboratory 2 Space Shuttle payload in 1994 and as part of Neurolab in 1998. German investigators participated in both of these missions, as well as Spacelab Life Sciences 1 in 1991. Germany's contribution to the ISS will be made through its participation in ESA, by funding nearly 40 percent of ESA's ISS commitment.

Italy

Founded in 1988 by the Italian government, the Italian space agency (ASI) is responsible for national and international cooperation programs and supports national participation in ESA. The agency's investigations span space sciences, Earth sciences, life sciences, and engineering.

In concert with the first Shuttle mission to fly the cooperative NASA/ASI Tethered Satellite System (TSS), STS-46 in 1992, the first Italian astronaut flew as a payload specialist. The second TSS mission flew in 1996, carrying two Italian astronauts, one representing ESA.

In addition to its contribution to the International Space Station as an ESA member, ASI has participated in the ISS program through a bilateral agreement with NASA to design, build, and supply three pressurized modules to serve as cargo transport and an attached station module.

Japan

The National Space Development Agency (NASDA), founded in 1969, is the primary organization responsible for space flight activities in Japan. The agency's mandate includes the development and operation of spacecraft, launch vehicles, and space flight experiments. NASDA is administered by the Science and Technology Agency, which in turn reports to the Science Activities Commission. The Commission sets national space policy and recommends budgets for the various governmental organizations involved in space exploration and research. The Institute of Space and Astronautical Science is dedicated to space science research on balloons, sounding rockets, and light-lift launch vehicles, while the National Aerospace Laboratory acts as Japan's national center for aerospace technology research.

The first major cooperative venture in space life sciences research between NASDA and NASA was the 1992 flight of the Spacelab-J payload on the STS-47 mission. The two space agencies shared responsibilities for payload selection and development and mission operation. A Japanese astronaut also flew on the mission, alongside the NASA crew. Cooperation continued on other Shuttle missions. NASA scientists used NASDA hardware for some of the life sciences studies conducted on the IML-2 payload on STS-65. Scientists sponsored by NASDA participated in the biospecimen sharing program that followed the flight of the SLS-2 payload on STS-58. Since 1995, NASDA has participated in two Shuttle flights. Neurolab, flown on STS-90 in 1998, included a NASDA investigation, and the NASDA Vestibular Function Experiment Unit flew on both STS-90 and STS-95.

NASDA is also a key partner in developing and building the International Space Station. NASDA will provide a pressurized module for the Station, known as the Japanese Experiment Module (JEM), for conducting materials, fluid, and life sciences investigations. To offset U.S. launch costs for the JEM, NASDA has agreed to build the Centrifuge Accommodation Module (CAM) along with a 2.5-m diameter research centrifuge and a life sciences glovebox to be housed in the CAM. The centrifuge will provide selectable levels of artificial gravity for life sciences investigations while the glovebox will provide a contained workspace similar in concept to the General Purpose Work Station (see Appendix III) used on the Space Shuttle. It is likely that NASDA will also build an aquatic habitat for use with CAM facilities, but agreements have not been formalized.

Russia

No national space agency was more greatly affected by political changes in the period between 1991 and 1995 than that of the former U.S.S.R, which sponsored a thriving space life sciences research program for many years. Following the dissolution of the Soviet Union in 1991, Moscow created the Russian Space Agency (RSA) in order to retain centralized control of the civilian space budget. RSA uses the resources of a military space agency called the Military Space Forces, also known by the initials of its Russian name, VKS. VKS controls Russia's spacecraft tracking networks and has its own spacecraft control center. It provides logistic support for the RSA's civilian launches. It also manages the Plesetsk Cosmodrome, which is the launch site of the unmanned Cosmos biosatellites. RSA and VKS share other facilities, such as Russia's other launch site, the Baikonur Cosmodrome in Kazakhstan. The two agencies jointly fund and manage the Gagarin Cosmonaut Training Center.

The prime commercial contractor to RSA, the Energiya Rocket and Space Complex, is another powerful force behind the Russian space program. Energiya orders spacecraft and boosters from subcontractors, arranges for VKS to carry out launches, owns and operates the Mission Control Center in Kaliningrad, and is largely responsible for the Mir space station. Civilian members of Russian spacecraft crews are recruited exclusively from Energiya's staff. Energiya, a private company, is owned jointly by the Russian central government and Energiya officials, with each group retaining 50-percent ownership. Accordingly, half of Energiya's funding comes from Moscow, and half is raised privately.

RSA manages a series of laboratories, institutes, and factories that conduct space-related activities. It also purchases items such as spacesuits, interplanetary probes, and data analysis services from small, specialized independent firms. In addition, RSA cooperates with independent scientific groups such as the Institute of Biomedical Problems (IMBP) and the Moscow Academy of Sciences Institute for Space Research. IMBP is dedicated to research in physiology, space biology, and medicine. It has its own laboratory test facilities with hardware designed for conducting studies using simulated microgravity and space flight conditions. It is a prominent participant in the life sciences research on Mir and the Cosmos biosatellites.

Although the Soviets cooperated with the U.S. in the sphere of space, and particularly in space life sciences research, for many years, the character of joint ventures has changed dramatically since 1991. Russian and NASA scientists and engineers cooperated more closely in develop-

ing experiments and hardware for the 1992 flight of the Cosmos 2229 (Bion 10) biosatellite mission than at any other time in the 25-year history of the Bion program. Scientists sponsored by Ames Research Center flew 13 life sciences experiments on the mission. U.S. personnel also participated in the preparation of hardware for the payload at the Plesetsk Cosmodrome and supported the recovery team in Kazakhstan, another first in the history of U.S.-Russian cooperation in space research. The level of integrated science and engineering development exhibited with Cosmos 2229 would continue on the Bion 11 mission launched in 1996. Other collaborations during the 1991–1995 period included the participation of Russian scientists in life sciences research conducted on the SLS-1 and SLS-2 payloads, which flew on the STS-40 and STS-58 Shuttle missions, respectively.

In 1993, NASA and RSA signed a multiyear contract for the collaborative NASA/Mir program using the Space Shuttle, the Russian Soyuz spacecraft, and the Mir space station. It permitted NASA astronauts to visit Mir for extended periods. In 1995, a NASA astronaut flew on a Russian Soyuz spacecraft to Mir and stayed onboard the station for three months along with two cosmonaut colleagues. Docking of the Shuttle to Mir occurred twice in the 1991–1995 period, with the Shuttle being used to transfer astronauts, supplies, experiment equipment, and specimens to and from Mir. Russian cosmonauts also flew on U.S. Shuttle missions STS-60 and STS-63 in 1994 and 1995. During the 1995–1998 time period, six more NASA astronauts stayed on Mir for extended durations. Two additional Shuttle-Mir dockings occurred in 1996, and three more occurred before the end of 1998.

Russia is playing a critical role in the development and building of the International Space Station, and Russian firms are teaming with U.S. partners to provide components for the Station. Russia will contribute a module called the Functional Cargo Block, a critical component of the Station. Other Russian hardware will provide all of the altitude maintenance and most of the power, life support, and attitude control capability of the Station. The U.S. and other international partners stand to benefit greatly from Russia's contributions because of its unmatched technological experience and expertise in the space arena. Automated space rendezvous and docking technology, necessary for the stable ISS operation, has already been developed by the Russians for Mir. Russia also expects to gain from its international partnership in the venture, not only financially, but also in learning how to transfer its space technology to commercial products and services that can benefit the national economy.

Ukraine

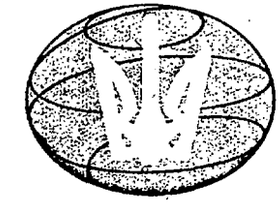

The National Space Agency of Ukraine (NKAU) was formed in 1992. After NKAU and NASA signed an agreement in 1994, the agencies cooperated on STS-87, in October 1997. A Ukranian payload specialist flew on the Shuttle. The KSC-managed Collaborative Ukranian Experiment payload included an educational counterpart called Teachers and Students Investigating Plants in Space, involving teachers and students in both countries.

Additional Reading

Canadian Space Agency. Canadian Space Agency Web site. http://www.space.gc.ca/welcome.html.

Connolly, James P., Michael G. Skidmore, and Denice A. Helwig. *Final Reports of the U.S. Experiments Flown on the Russian Biosatellite Cosmos 2229*. NASA TM-110439, April 1997.

European Space Agency. European Space Agency Microgravity Database Web site. http://www.esrin.esa.it./htdocs/mgdb/mgdb-home.html

Finton, Brian and David Moore. National and International Space Life Sciences Research Programmes 1980 to 1993—and Beyond. In: *Biological and Medical Research in Space*, edited by David Moore, Peter Bie, and Heinz Oser, pp. 432–541. Berlin: Springer-Verlag, 1996.

Morgan, Tom, ed. *Jane's Space Directory 1998–1999*, 14th Edition. Great Britain: Jane's Information Group, 1998.

NASA. ISLSWG Strategic Plan. June 1995. Contained in Ames Research Center's Space Life Sciences Web site. http://lifesci.arc.nasa.gov/pages/strategic_plan_page.html.

Oberg, J. Russia's Space Program: Struggling against Heavy Odds. *IEEE Spectrum*, vol. 32, December 1995.

U.S. Congress, Office of Technology Assessment. *U.S.-Russian Cooperation in Space*, OTA-ISS-618. Washington, DC: U.S. Government Printing Office, April 1995.

Page intentionally left blank

3

Studying Living Organisms in Space

Space life sciences research is critical to preparing for the eventuality of long-term space exploration. Along the way, this same research increases our knowledge of basic biological processes and provides insight into the mechanisms and treatment of various Earthly medical conditions. However, these scientific results are not achieved easily. The study of living organisms in space poses many challenges that may be negligible or nonexistent in ground-based research.

Selection and Training

Determining the most appropriate research subject for studying a particular biological question is not a simple matter. At the broadest level, basic research questions may offer more latitude in approach than questions of applied research, but in space life sciences, the two are often linked. In plant research, basic questions result from the need to maximize food production while minimizing the required onboard spatial volume or from the need to raise plants in an entirely closed environment. By the same token, much basic animal research derives from the need to maximize the health and safety of the astronaut crew. When it comes to the actual species selection, many issues must be taken into account (Fig. 1). Space flight imposes several unique operational constraints that must be addressed in addition to scientific selection criteria. The size, weight, and ease of maintenance of an organism, and the availability of flight-qualified support hardware are issues that become more central when conducting life sciences research in space rather than on the ground.

Species are often selected on the basis of their capacity to undergo some physiological adaptation process or life-cycle stage within a short period of time. For example, Japanese red-bellied newts were selected for experiments on the International Microgravity Laboratory 2 (IML-2) payload because their vestibular systems would undergo most of their development within the planned duration of the Shuttle flight.

Other organisms are chosen because they are resilient and can be easily cared for in an automated setting where food, water, and appropriate environmental conditions can be provided but where human caretakers may not be available. Some, such as rats of the Wistar strain, are valuable research subjects not only because of their genetic homogeneity, but because their extensive use in research makes them a known quantity. Furthermore, their small size and ease of maintenance allows them to be flown in relatively large numbers in the limited space available in a

Preceding Page Blank

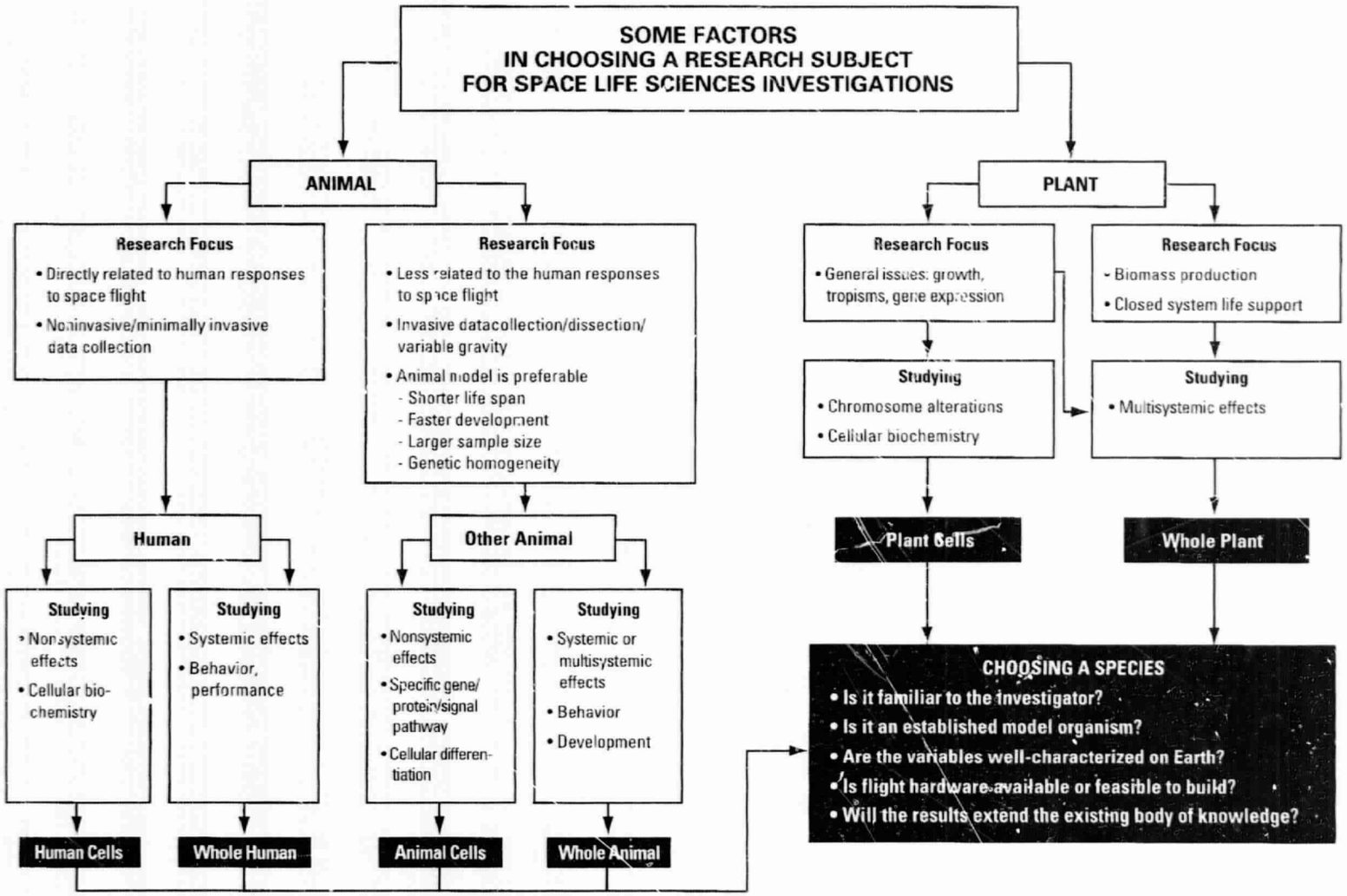

Figure 1. Many factors go into why an investigator chooses to work with a particular organism for a space life sciences experiment.

spacecraft. Finally, their genetic similarity throughout the strain allows for statistical significance with a small sample.

An overarching question for much space life sciences research is how gravity, and its effective absence, influences the development and function of living systems. The selection of many research subjects is driven directly by this focus. For instance, the effect of gravity on growth is often studied in plant species because the growth patterns of roots and shoots differ in response to gravity. Jellyfish serve as excellent subjects for research on gravity-sensing mechanisms because their specialized gravity-sensing organs, statoliths, have been well characterized by biologists. In fact, throughout the history of space life sciences, the combination of research priorities and practical constraints has led to a veritable menagerie of organisms orbiting the Earth. Some of the more exotic include African claw-toed frogs, Japanese quail, tobacco hornworm pupae, flour beetles, sea urchin eggs, parasitic wasps, and pepper plants.

When investigations address human adaptation to space flight and its health implications, the use of mammalian species often becomes necessary when humans are not appropriate subjects. The rat is the mammal employed most frequently for space flight research. Its well-demonstrated biochemical and structural similarity with humans makes the rat an appropriate subject with which to test new drugs and investigate many disorders experienced by astronauts during and after space flight. Because of their phylogenetic proximity to humans, nonhuman primates, such as rhesus monkeys, have occasionally served as research subjects in space biology, but only when the need has been clearly demonstrated.

When working with higher organisms, such as mammals, stress caused by unfamiliar conditions can impact science results. To prevent this, the animals must be habituated to their flight habitat, life support hardware, and biosensors. Some animals, such as rats and rhesus monkeys, must be trained to use inflight feeding and watering devices. When performance and behavior is studied, as is sometimes the case with rhesus monkeys, the animals must be trained to perform particular tasks in response to automated stimuli.

Manned vs. Unmanned Missions

Manned and unmanned space flight pose different challenges for conducting life sciences experiments. On manned missions, the primary consideration is the safety of the crew. When mammals are used as research subjects, microbiological testing of the animals is mandatory to ensure that they are free of pathogens that could be transmitted to crew members. Organisms that are part of the science payloads must be isolated from the humans onboard so that possible contaminants and odors do not affect crew health, comfort, or performance. Hardware for housing the experiment subjects is typically custom-built for this purpose and kept sealed or filtered for the duration of the mission.

Although crew members typically have busy inflight schedules, they may support experiments by monitoring research subjects visually on a periodic basis or performing contingency procedures made necessary by hardware malfunction or unexpected experiment performance. The crew may also replenish water and food supplies, substantially reducing the need for automation. On some missions, particularly those dedicated to life sciences, crew members conduct inflight experiment procedures directly on research subjects. Direct access to subjects is accomplished using a glovebox apparatus that maintains biological isolation of the organisms. On the STS-58 mission dedicated to the Spacelab Life Sciences 2 payload, Shuttle astronauts performed rat dissections and tis-

sue sampling procedures. Such procedures will likely become commonplace on the International Space Station.

The costs of research on manned missions can be attributed largely to the extensive testing of experiment hardware and the need to meet crew safety requirements. Unmanned missions are generally much less expensive, with most of the cost going for hardware automation. Experiments on these missions must accommodate the lack of crew to conduct support procedures or intervene in the event of an equipment malfunction.

Loading and Retrieval

Space life sciences experiments often require that research subjects be installed in the spacecraft in a precisely timed manner. For instance, if germination of plant seeds is to occur in space, or embryos are to undergo a particular stage of cell division, they must be in a specific stage of development at the time of launch. If the launch is delayed because of inclement weather or a system malfunction, research subjects frequently must be unloaded from the spacecraft and a fresh group of subjects installed once a new launch time is set. To accommodate such an eventuality, researchers must have several backup subject groups, in varying stages of development, prepared for flight.

In order to prepare the spacecraft itself for launch, all payloads, including those accommodating live research subjects, must be integrated into the spacecraft as early as several months before launch. Only critical items, such as the subjects themselves, can be loaded up to several hours prior to launch. Installation of habitats with living organisms may require special handling, depending on the structure and orientation of the spacecraft. Installation of research subjects into the Space Shuttle, which is oriented vertically during the prelaunch period, can involve lowering the organisms in their hardware units through a tunnel into the holding racks in the Spacelab or SPACEHAB.

Because organisms begin to readapt to Earth gravity immediately upon landing, dissection and tissue preservation in orbit or quick access postflight is critical to the value of the science. Organisms can be removed from manned spacecraft such as the Space Shuttle within a few hours after touching down. Removal from the unmanned Cosmos biosatellite occurs several hours postflight because mission personnel must first locate, and then travel to, the landing site. Transport from the spacecraft to ground laboratories may be time-consuming when the biosatellite lands some distance away from Moscow. In such instances, a temporary field laboratory is set up at the landing site to allow scientists to examine the subjects before readaptation occurs. The issue of postflight readaptation highlights the value of inflight data and tissue collection.

Habitat and Life Support

Suitable habitats and adequate life support systems for research subjects are essential for experiment success. Hardware to support living organisms is designed to accommodate the conditions of space flight, but microgravity poses special engineering challenges. Fluids behave differently in microgravity. The relative importance of physical properties such as surface tension increases, and convective air currents are absent or reduced. Plants are usually flown attached to a substrate so that nutrients and water can be provided through the root system. Cultured cells are flown in suspensions of renewable media contained within specialized hardware units. Nonhuman primates are often flown in comfortable confinement systems to prevent them from endangering themselves

during launch and reentry or damaging sensors or instrumentation during the flight. Other organisms such as rodents are typically flown without confinement so they can float freely within their habitats while in the microgravity environment. With the use of implanted biotelemetry hardware, as with squirrel monkeys on the Spacelab 3 payload in 1985, small primates can be flown unconfined.

The comfort and safety of research subjects is a high priority. Because trauma or stress can compromise experiment results, humane care and good science go hand in hand. Animals may be singly or group-housed, but group-housed animals tend to remain healthier and exhibit fewer signs of stress. When singly housed rhesus monkeys were flown within the Russian Primate Bios units on the Cosmos missions, the animals were oriented so that they could see each other throughout the flight. For nonhuman primates, environmental enrichment is provided in the form of behavioral tasks or "computer games," which can double as measures of behavior and performance. Such enrichment helps to prevent stress and boredom, a possible result of confinement and isolation.

Light within habitats is usually regulated so as to provide a day/night cycle similar to that on Earth. Air circulation and heating or cooling ensures that temperature and humidity are maintained at comfortable levels. Food is provided according to the needs of the species in question and the requirements of the experiments. Generally, a continuous water supply is available. Waste material, which includes not only excreta, but also particulate matter shed from the skin and debris generated during feeding activities, is eliminated using air flow systems engineered for the purpose. Within plant habitats, gaseous waste is similarly eliminated. Separation of liquid waste from solid is desirable for certain experiments, and systems to carry out such separations have been developed.

Monitoring and Welfare

Frequently, researchers employ surgically implanted biosensors or sensors mounted within habitats to monitor animal subjects. These sensors provide important scientific data, and, with inflight downlinks of physiological parameters, researchers are able to remotely monitor the health and welfare of their subjects. Primates are often implanted with sensors that measure such vital signs as heart rate, ECG, EEG, and body temperature. Activity sensors are often mounted in the cages of rats so that researchers can assess animal activity while in space. Automatic gas sampling can provide a measure of the metabolic activities of plants. Still photographs taken by preprogrammed cameras allow researchers to obtain valuable information, particularly about plant growth and the development of embryos inflight. Video monitoring provides behavioral information on animals such as primates, rats, frogs, and jellyfish. On manned missions, crew members can directly observe subjects, keep records of their observations for later use, discuss their observations with researchers inflight, and, if necessary, intervene to assist a subject.

Biosampling

Investigators can also obtain data in the form of biosamples such as excreta, blood, tissue biopsies, and serial sections. When an experiment protocol requires the collection of biosamples, they are first obtained preflight to provide a baseline measure of organismal function. Inflight collection of biosamples other than urine and feces is possible only on manned missions. The first-ever inflight biopsies and dissections of animal subjects were conducted on Spacelab Life Sciences 2, the STS-58 Shuttle mission. Because of the extensive commitment of resources such as facilities, space, and crew time to payload operations, inflight

biosampling procedures are rarely performed on the Space Shuttle. Inflight fixation, through hardware automation or simple crew procedures, is a more common way to collect biosamples. Biosample fixation and storage techniques are effectively used with small animal subjects, plants, and cultured cells.

Postflight collections of biosamples are carried out for many life sciences experiments. Because readaptation to Earth gravity reverses many of the changes that occur in tissues in space, it is imperative that biosamples be obtained as soon as possible postflight. To facilitate this, ground laboratories and personnel are usually prepared to implement such experiment procedures at the time of landing. In the case of the Cosmos biosatellite, biosample collections are carried out in mobile field laboratories set up at the landing site. Unused tissues from the organisms flown in space may be fixed or frozen and stored in archives for later use by scientists.

Control Groups

Space life sciences experiments make extensive use of control groups in part because limited flight opportunities may not allow for replication of a given experiment. Employing control groups is essential to increase the statistical validity of the results of an experiment with a relatively small number of subjects in the experiment group. Control groups help researchers isolate the effects of microgravity and the vibration, acceleration, and noise of spacecraft launch and landing from the effects of other conditions that research subjects may encounter inflight, such as altered environmental conditions, and the stress that can be associated with confinement, isolation, implantation of sensors, and biosampling procedures.

Three types of control groups are often employed in space life sciences experiments. The synchronous control consists of organisms that are identical in type and number to those flown onboard the spacecraft. They are housed in identical habitats and kept within a simulated spacecraft environment in a ground laboratory. Conditions within the simulated spacecraft environment, such as humidity and temperature, are set to levels expected to occur within the actual spacecraft during flight. The synchronous control procedures begin at the time of launch and end upon landing. The purpose is to isolate the effects on the research subjects of extraneous conditions experienced during space flight.

An asynchronous control (or delayed synchronous control) is similar to the synchronous control except that procedures begin several hours or days after the flight. For the asynchronous and delayed synchronous controls, conditions within the simulated spacecraft environment are identical to those that prevailed within the actual spacecraft throughout the flight. Asynchronous and delayed synchronous control procedures last for a duration identical to that of the flight. This control is used to determine whether the effects that may be seen in the flight organisms are the result of anomalous environmental conditions, such as increased temperature, that may have occurred during the flight.

A vivarium control is usually conducted to determine whether effects that may be seen in the flight organisms could be due to the stress of being confined or isolated or of being housed in flight hardware units. In this control, a group of organisms similar to the flight group is housed in standard laboratory conditions for a duration identical to the length of the flight.

Additional controls may be conducted as indicated by specific research concerns. For instance, when the flight research subjects are

The Ethical Use of Animals in Space Life Sciences Research

Interview with Joseph Bielitzki

Joe Bielitzki joined NASA in 1996 as the agency's first Chief Veterinary Officer. He brought with him 20 years of experience in veterinary positions in institutional, private practice, and consulting settings, including many years at the University of Washington Primate Center.

At NASA, Bielitzki is responsible for ensuring that the animals used in space flight and ground-based research are properly cared for and experience minimal pain and distress. He is also responsible for the compliance of all science protocols with the laws, rules, and regulations established for animal care in scientific research. When an experiment requires training or conditioning of animals or complex surgical procedures, he may provide consultation on the experiment design.

Commenting on his role in space life sciences research, Bielitzki said, "My job has to do with societal benefits. At NASA, the job has to do with being able to identify the risks of space travel for the astronauts. If we are going to fly humans, then we should know what's going to make them sick, how sick they are going to be, and how we can treat them if and when they get sick. Most of that work is going to be tested and developed with animals, so the animal models are very important. Veterinarians are the first people you look to when you are looking at new treatments or new medicines or new ways to deal with the problems that the astronauts might have because much of the early work is done in animal models."

Since Bielitzki's arrival, NASA has established bioethical principles for the use of animals in space life sciences research. The principles address the ethical justification for using animals in research. "It is a significant contribution to the entire federal program. We are the first federal agency to develop principles like these," said Bielitzki. "Those principles have been endorsed by the rest of the federal agencies now." These bioethical principles are as follows :

- Respect for Life: Research animals should be of an appropriate species and health status. The number used should be the minimum required to obtain valid scientific results. Selection should include cognitive capacity. Nonanimal alternatives should be used when possible.

- Societal Benefit: Assessment of the overall ethical value of animal use should include consideration of the full range of potential societal benefits, the populations affected, and expected burdens to the research animals.

- Nonmaleficence: The minimization of distress, pain, and suffering is a moral imperative.

"If nothing else happens in my career, the establishment of these principles is probably the most significant thing I've been able to accomplish. It is a very short set of principles, but it is one that I think is going to stand the test of time. I hope that they are improved upon, but I doubt that anyone will be able to take away from them,"said Bielitzki.

The hope is that the bioethical principles will also be used in the International Space Station (ISS) in agreement with partnering nations. Bielitzki has been tasked with developing animal use standards for the ISS. "We're going into a partnership where there are different cultures, local standards, and norms, and we have to come up with a set of standards that's going to meet everybody's needs. We may well end up with some rules and requirements that are more stringent than what we see in the United States in a number of areas, to meet the requirements of the member nations," said Bielitzki.

In fact, there are currently no international standards for the use of animals in biomedical research. Space life sciences research and the ISS may end up providing an imperative to develop such standards.

mammals implanted with biosensors, a control group of similar animals without implanted sensors may be studied to determine whether any effects observed could be the result of the implants.

Scientists sometimes carry out studies in simulated microgravity conditions on Earth in order to obtain pilot data for flight experiments or to verify the results of flight experiments. The effects of microgravity may be simulated by removing the gravitational load on a particular portion of the body or by effectively canceling out or minimizing the force of gravity. Bed rest is the most commonly used method for simulating microgravity when the research subjects are humans or nonhuman primates. Studies of muscle and bone atrophy are sometimes conducted using this method. Tail suspension is used to simulate microgravity in rats. The gravitational load to the hindlimbs is eliminated by suspending rats by their tails, leaving them free to move about on their forelimbs. Horizontal, rotating clinostats that apply a constantly changing vector acceleration force canceling out the vector force of gravity are often used to simulate microgravity in plants.

Regulations and Oversight

Space life sciences research, like that in other fields, is subjected to outside peer review both at the proposal stage and the publication stage. However, because of the unique nature of space flight, research conducted in space is subjected to additional scrutiny. Researchers must meet not only the guidelines and regulations prescribed by mission managers and safety panels, but also ensure that their experiments comply with the requirements of crew members and other researchers participating in that mission. Furthermore, all NASA-sponsored research using animal subjects, whether conducted in space or on the ground, must meet the rigorous review of the Institutional Animal Care and Use Committee (IACUC). Each research institution must convene an IACUC whose mandate is to ensure that all animal use is necessary and that all experiment protocols and animal care procedures meet federal animal welfare guidelines. Lastly, research carried out in space, because of its importance and high visibility, must bear the scrutiny of the public eye.

Additional Reading

Ballard, Rodney W. and Richard C. Mains. Animal Experiments in Space: A Brief Overview. In: *Fundamentals of Space Biology*, edited by Makoto Asashima and George M. Malacinski. Tokyo: Japan Scientific Societies Press and Berlin: Springer-Verlag, 1990, pp. 21–41.

4

Programs, Missions, and Payloads

Space life sciences research conducted by Ames Research Center (ARC) and Kennedy Space Center (KSC) reached new heights between 1991 and 1995. In fact, this five-year period rivaled the previous 25 years in mission participation and payloads and experiments flown.

From 1965, with the inception of life sciences at ARC, through 1990, the ARC and KSC life sciences programs participated in 25 space flight missions that carried a total of 27 life sciences payloads into orbit. Across these 27 payloads, 223 experiments were conducted, although determining exact experiment numbers can be difficult because of tissue sharing programs and subexperiments.

From 1991 through 1995, the ARC and KSC life sciences programs participated in 24 space flight missions that carried a total of 34 life sciences payloads into orbit. Across these 34 payloads, 142 experiments were conducted.

A variety of factors contributed to this dramatic growth in space life sciences research. On the operational side, an increase in the use of small payloads on the Space Shuttle allowed for more frequent access to flight opportunities. By their nature, small payloads have relatively short development times and make minimal impact on mission resources. These attributes make it easier to accommodate a small payload on any given Shuttle flight. On the science side, throughout the 1990s, cell and molecular biology have risen to a prominent place in the life sciences in general. This shift has been reflected in the increase of space life sciences studies conducted using cell cultures. Because of the small space requirements and ease of automation for these studies, they have fit well with the small payloads trend.

Organizational factors contributing to the increase in space life sciences research post-1990 include the fact that the life sciences program at KSC did not begin in earnest until 1989, with only two experiments on as many payloads flown prior to 1991. Participation in or sponsorship of 12 payloads followed over the next five years. A factor that may have delayed the growth of space life sciences research is the Challenger explosion in 1986. The subsequent grounding of the entire Space Shuttle fleet for nearly three years occurred after only the fifth life sciences Shuttle payload. This temporarily left the then Soviet-sponsored Cosmos biosatellite as the sole platform for conducting space life sciences experiments.

ARC and KSC Life Sciences Missions Flown 1991–1995

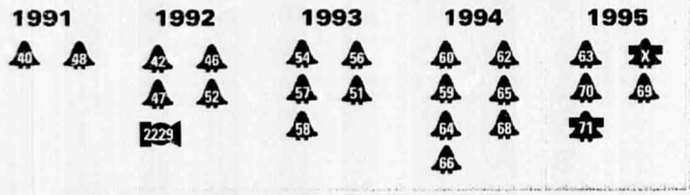

LEGEND

- Cosmos/Bion
- Shuttle
- NASA-Mir
- * Left on Mir

Total Experiments Flown 1991–1995: 163

MISSION CHRONOLOGY

Mission	Payload	Launch	Duration	Expts.
STS-40	Spacelab Life Sciences 1 (SLS-1)	06 / 05 / 91	9 days	33
STS-48	Physiological and Anatomical Rodent Experiment 1 (PARE.01)	09 / 12 / 91	5 days	1
STS-42	International Microgravity Laboratory 1 (IML-1)	01 / 22 / 92	8 days	5
STS-46	Pituitary Hormone Cell Function (PHCF)	07 / 31 / 92	8 days	1
STS-47	Spacelab-J (SL-J)	09 / 12 / 92	8 days	3
STS-52	Physiological Systems Experiment 2 (PSE.02)	10 / 22 / 92	10 days	2
Cosmos 2229	Bion 10	12 / 29 / 92	12 days	12
STS-54	CHROMEX-03	01 / 13 / 93	6 days	1
	Physiological and Anatomical Rodent Experiment 2 (PARE.02)	01 / 13 / 93	6 days	6
STS-56	Physiological and Anatomical Rodent Experiment 3 (PARE.03)	04 / 08 / 93	9 days	2
STS-57	Physiological Systems Experiment 3 (PSE.03)	06 / 21 / 93	10 days	2
STS-51	CHROMEX-04	09 / 12 / 93	10 days	3
STS-58	Spacelab Life Sciences 2 (SLS-2)	10 / 18 / 93	14 days	28
STS-60	IMMUNE.1	02 / 03 / 94	8 days	1
STS-62	Physiological Systems Experiment 4 (PSE.04)	03 / 04 / 94	14 days	2
STS-59	National Institutes of Health Cells 1 (NIH.C1)	04 / 09 / 94	11 days	3
STS-65	International Microgravity Laboratory 2 (IML-2)	07 / 08 / 94	15 days	3
STS-64	Biological Research in Canisters 2 (BRIC-02)	09 / 09 / 94	11 days	1
STS-68	Biological Research in Canisters 1 (BRIC-01)	09 / 30 / 94	11 days	2
	CHROMEX-05	09 / 30 / 94	11 days	1
STS-66	National Institutes of Health Cells 2 (NIH.C2)	11 / 03 / 94	11 days	2
	National Institutes of Health Rodents 1 (NIH.R1)	11 / 03 / 94	11 days	13
STS-63	Biological Research in Canisters 3 (BRIC-03)	02 / 03 / 95	8 days	1
	CHROMEX-06	02 / 03 / 95	8 days	1
	IMMUNE.2	02 / 03 / 95	8 days	1
	National Institutes of Health Cells 3 (NIH.C3)	02 / 03 / 95	8 days	3
Soyuz 70	Incubator 1*	03 / 15 / 95	104 days	9
STS-71	Incubator 2*	06 / 27 / 95	128 days	9
	Greenhouse 1*			1
STS-70	Biological Research in Canisters 4 (BRIC-04)	07 / 13 / 95	9 days	1
	Biological Research in Canisters 5 (BRIC-05)	07 / 13 / 95	9 days	1
	National Institutes of Health Rodents 2 (NIH.R2)	07 / 13 / 95	9 days	6
STS-69	Biological Research in Canisters 6 (BRIC-06)	09 / 07 / 95	11 days	1
	National Institutes of Health Cells 4 (NIH.C4)	09 / 07 / 95	11 days	2

ORGANISMS FLOWN

VERTEBRATES: Adults or Juveniles

Frog (*Xenopus laevis*)	47
Human (*Homo sapiens*)	47
Newt (*Cynopus pyrrhogaster*)	52
Rat (*Rattus norvegicus*)	40 48 42 46 47 57 52 56 51 60 62 59 65 64 68 66 63 70 69
Rhesus monkey (*Macaca mulatta*)	2229

VERTEBRATES: Embryonic Forms

Frog (*Xenopus laevis*) egg	47
Japanese quail (*Coturnix coturnix*) egg	X 71
Newt (*Cynops pyrrhogaster*) egg	65

INVERTEBRATES: Adults or Juveniles

Jellyfish (*Aurelia aurita*)	40 65
Nematode (*Caenorhabditis elegans*)	42

INVERTEBRATES: Embryonic Forms

Gypsy moth (*Lymantria dispar*) egg	54
Tobacco hornworm (*Manduca sexta*) pupa	40

PLANTS

Mouse-ear cress (*Arabidopsis thaliana*)	54 51 48
Oat (*Avena sativa*)	54
Orchardgrass (*Dactylis glomerata* L.)	54
Soybean (*Glycine max*)	40 63
Wheat (*Triticum aestivum*)	42 51 40 71

CELL CULTURES AND UNICELLULAR FORMS

Carrot (*Daucus carota*)	58
Chicken (*Galus galus*)	58 66 63
Daylily (*Hemerocallis*)	65 47
Human (*Homo sapiens*)	58
Mouse (*Mus musculus*)	42
Rat (*Rattus norvegicus*)	40 58 51 58 69
Slime mold (*Physarum polycephalum*)	58
Yeast (*Saccharomyces cerevisiae*)	42

ARC and KSC Life Sciences Missions Flown 1996–1998

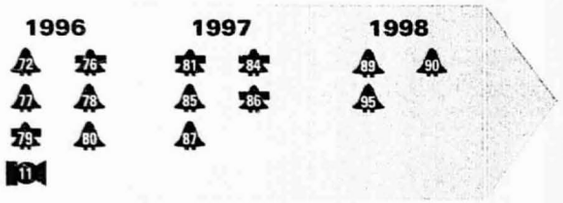

LEGEND

- Cosmos/Bion
- Shuttle
- NASA-Mir

* Left on Mir

† Damaged in Mir collision

Total Experiments Flown 1996–1998: 92

MISSION CHRONOLOGY

Mission	Payload	Launch	Duration	Expts.
STS-72	National Institutes of Health Cells 5 (NIH.C5)	01/11/96	9 days	2
	National Institutes of Health Rodents 3 (NIH.R3)	01/11/96	9 days	1
STS-76	Biorack 1	03/22/96	9 days	3
	Incubator 3 *	03/22/96	16 days	9
	Environmental Radiation Measurements on Mir Station 1*	03/22/96	188 days	1
STS-77	Aquatic Research Facility 1 (ARF-01)	05/19/96	10 days	1
	Biological Research in Canisters (BRIC-07)	05/19/96	10 days	1
	IMMUNE.3	05/19/96	10 days	1
	National Institutes of Health Cells 7 (NIH.C7)	05/19/96	10 days	2
STS-78	Biological Research in Canisters 8 (BRIC-08)	06/20/96	17 days	1
	Life and Microgravity Spacelab (LMS)	06/20/96	17 days	3
STS-79	Greenhouse 2*	09/16/96	123 days	1
	Environmental Radiation Measurements on Mir Station 2*	09/16/96	127 days	1
STS-80	Biological Research in Canisters 9 (BRIC-09)	11/19/96	18 days	1
	National Institutes of Health Cells 6 (NIH.C6)	11/19/96	18 days	2
	National Institutes of Health Rodents 4 (NIH.R4)	11/19/96	18 days	1
Bion 11	Bion 11	12/24/96	14 days	9
STS-81	Biorack 2	01/12/97	10 days	5
	Effective Dose Measurement during EVA 1*	01/12/97	10 days	1
	Environmental Radiation Measurements on Mir Station 3*	01/12/97	132 days	1
	Biological Research in Canisters on Mir (BRIC-Mir)*	01/12/97	132 days	1
STS-84	Biorack 3	05/15/97	9 days	4
	Effects of Gravity on Insect Circadian Rhythmicity*	05/15/97	143 days	1
	Greenhouse 3*	05/15/97	122 days	1
	Effective Dose Measurement during EVA 2*	05/15/97	N/A†	1
	Environmental Radiation Measurements on Mir Station 4*	05/15/97	143 days	1
STS-85	Biological Research in Canisters 10 (BRIC-10)	08/07/97	12 days	1
STS-86	Active Dosimetry of Charged Particles*	09/25/97	104 days	1
	Environmental Radiation Measurements on Mir Station 5*	09/25 /97	128 days	1
STS-87	Collaborative Ukranian Experiment (CUE)	11/19/97	16 days	11
STS-89	Closed Equilibrated Biological Aquatic System (CEBAS)	01/22/98	9 days	2
	Microgravity Plant Nutrient Experiment (MPNE)	01/22/98	9 days	1
STS-90	Neurolab (NL)	04/17/98	16 days	15
STS-95	Biological Research in Canisters 13 (BRIC-13)	10/29/98	9 days	1
	Biological Research in Canisters PEG/C	10/29/98	9 days	1
	National Institutes of Health Cells 8 (NIH.C8)	10/29/98	9 days	1
	Vestibular Function Experiment Unit (VFEU)	10/29/98	9 days	1

ORGANISMS FLOWN

VERTEBRATES: Adult or Juveniles

- Rat (*Rattus norvegicus*) — 72, 77, 90, 79, 90
- Mouse (*Mus musculus*) — 90
- Oyster toadfish (*Opsanus tau*) — 90, 95
- Swordtail fish (*Xiphophorus helleri*) — 90, 90
- Rhesus monkey (*Macaca mulatta*) — 11

VERTEBRATES: Embryonic Forms

- Japanese quail (*Coturnix coturnix*) egg — 76
- Medaka (*Oryzias latipes*) embryo — 77

INVERTEBRATES: Adults or Juveniles

- Nematode (*Caenorhabditis elegans*) — 76
- Snail (*Biomphalaria glabrata*) — 90, 90
- Cricket (*Acheta domesticus*) — 90
- Black-bodied beetle (*Trigonoscelis gigas*) — 84

INVERTEBRATES: Embryonic Forms

- Tobacco hornworm (*Manduca sexta*) pupa — 77
- Sea urchin (*Lytechinus pictus*) egg and embryo — 77

PLANTS

- Tomato (*Lycoperscion esculentum*) — 90, 95
- Tobacco (*Nicotiana tabacum*) — 90, 95
- Douglas fir (*Pseudotsuga menziesii*) — 77
- Loblolly pine (*Pinus taeda*) — 77
- Orchardgrass (*Dactylis glomerata*) — 90
- Cucumber (*Cucumis sativus*) — 90
- Mouse-ear cress (*Arabidopsis thaliana*) — 11, 84
- Soybean (*Glycine max*) — 90
- Mustard (*Brassica rapa*) — 90, 84
- Hornweed (*Ceratophyllum derersum*) — 90
- Wheat (*Triticum aestivum*) — 90, 79
- Moss (*Ceratodon purpureus*) — 90

CELL CULTURES AND UNICELLULAR FORMS

- Daylily (*Hemerocallis* cv. Autumn Blaze) — 90, 81
- Bacterium (*Burkholderia cepacia*) — 81
- Sea urchin (*Strongelocentrotus pupuratus*) sperm — 81
- Sea urchin (*Lytechinus pictus*) sperm — 84
- Chicken (*Gallus gallus*) — 72, 77, 90
- Human (*Homo sapiens*) — 90, 76, 81, 84
- Rat (*Rattus norvegicus*) — 90
- Mouse (*Mus musculus*) — 76, 81, 84

Page intentionally left blank

The Space Shuttle Program

Life sciences research was prolific within the Space Shuttle program between 1991 and 1995. In this five-year period, 21 Space Transportation System (STS) missions carried life sciences experiments into Earth orbit. Two major trends within the Shuttle program gave the life sciences research community increased access to space: the more frequent use of small payloads and NASA's promotion of the commercial development of space.

The use of small payloads has offered life scientists numerous opportunities. The location of small payloads in the middeck allows for late loading before launch and early recovery after landing. Quick postflight access allows researchers to examine the effects of microgravity on living systems before the organisms readapt to Earth gravity. Use and reuse of existing hardware minimizes development costs and the lag time between initial experiment proposal and actual flight. These payloads can be flown with short preparation time allowing investigators to repeat experiments and verify data on subsequent missions. Several life sciences small payload series have taken advantage of existing hardware and the ability to refly experiments. These advantages are accompanied by some limitations. Small payloads must be highly automated and require minimal or no crew involvement. Significant crew interaction with experiments is not possible since the middeck has no laboratory facilities. Size, weight, safety, and containment restrictions are especially important because small middeck payloads share space with crew living quarters.

The focus on the commercialization of space has also contributed to the success of the Shuttle program. Five commercially sponsored life sciences payloads were flown during the 1991–1995 period: PSE.02 on STS-52, PSE.03 on STS-57, PSE.04 on STS-62, IMMUNE.1 on STS-60, and IMMUNE.2 on STS-63. On each mission, a NASA Commercial Space Center (CSC) [formerly Center for the Commercial Development of Space (CCDS)] worked closely with a corporate partner to develop the payload. NASA is currently working towards commercializing the operation of the Space Shuttle.

The NASA CSC network was created in 1985 to enable government, industry, and academic institutions to effectively combine resources. Since then, the network has become increasingly important to the promotion of private sector investment in space-related research. NASA currently operates 17 CSCs in the areas of materials processing, biotechnology, remote sensing, communications, automation and robotics, space propulsion, space structures, and space power. Each is based at a university or a nonprofit research institution. The network receives annual funding and scientific and technical expertise from NASA. Additional financial and in-kind contributions from industry affiliates and state and other government agencies often exceed funding provided by NASA. Distribution of cost in this manner increases the feasibility of space research. Partnerships with industry also help emerging technological applications to move quickly and effectively from the laboratory to the marketplace.

STS Facilities

The STS is NASA's primary launch system for placing payloads in Earth orbit. The central component of the STS is the Space Shuttle, a reusable orbiter launched with a pair of solid-propellant boosters and a liquid-propellant tank. The Shuttle is always launched from Kennedy Space Center and lands there except in the case of inclement weather. Edwards Air Force Base provides an alternate landing site for those occasions. The STS fleet currently consists of four interchangeable orbiters: Atlantis, Columbia, Discovery, and Endeavour. The middeck of the orbiter serves as the living area of the Shuttle crew and provides storage for small payloads. Spacelab, the STS life science laboratory, is mounted within the Shuttle cargo bay (Fig. 2). Spacelab and other STS components operational prior to 1991 are profiled in *Life into Space, 1965–1990*.

The SPACEHAB module is a facility leased by NASA from SPACEHAB, Inc. SPACEHAB, which mounts in the forward end of the Shuttle cargo bay, serves as an extension of the Shuttle middeck volume. This extended space allows for the cost-effective and efficient flight of payloads that could not otherwise be accommodated in the middeck.

NASA signed a lease agreement with SPACEHAB, Inc. in late 1990 covering five flights of the module on the Shuttle. SPACEHAB, Inc. is responsible for integrating SPACEHAB into the Shuttle, for documenting safety arrangements, and for training Shuttle crew in operation of the facility.

The crew can enter the module from the middeck through a tunnel adapter connected to the airlock. The facility weighs 9628 pounds, is 9.2 feet long, 11.2 feet high, and 13.5 feet in diameter. It increases pressurized experiment space in the Shuttle orbiter by 1100 cubic feet, quadrupling the internal working and storage volume of the Shuttle. It has a total payload capacity of 3000 pounds. Environmental control of the laboratory interior maintains ambient temperatures between 65 and 80 °F. Experiments housed within SPACEHAB have access to power, temperature control, and command/data functions. Other accommodations include optional late access and early retrieval of payloads within SPACEHAB.

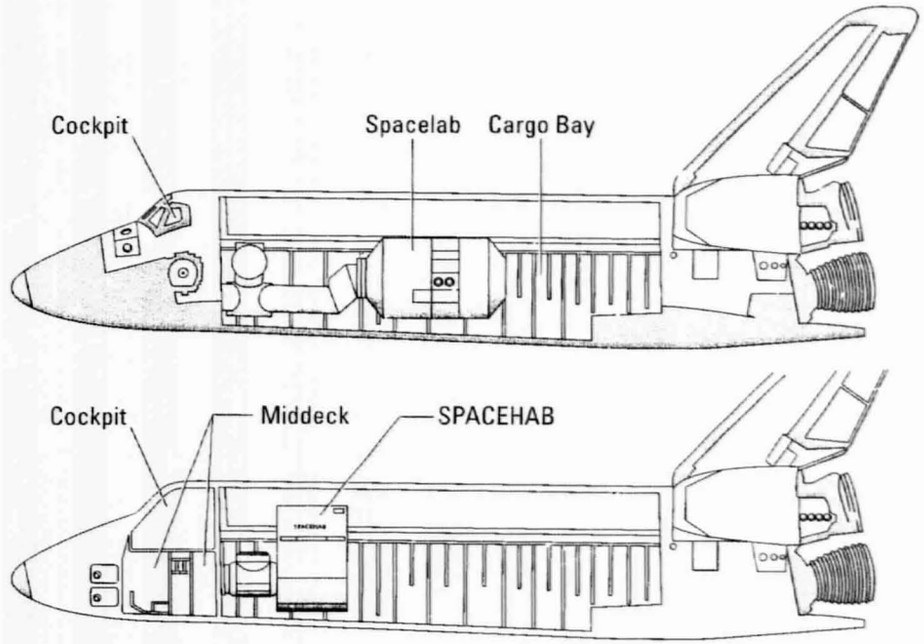

Figure 2. The Spacelab and SPACEHAB modules are pressurized laboratory facilities that can be placed in the Shuttle cargo bay. The middeck contains pressurized living quarters for the crew as well as locker space for holding small payloads.

Payloads can be mounted directly in SPACEHAB but are usually placed in SPACEHAB lockers, which are identical to Shuttle middeck lockers, or SPACEHAB racks.

SPACEHAB flew three times on the Space Shuttle between 1991 and 1995: on the STS-57 mission in 1993 carrying the PSE.03 payload, on the STS-60 mission in 1994 carrying the IMMUNE.1 payload, and on the STS-63 mission in 1995 carrying the IMMUNE.2 payload. The module carried life sciences payloads five times between 1996 and 1998: on the STS-76 and STS-77 missions in 1991, the STS-81 and STS-84 missions in 1997, and the STS-95 mission in 1998.

Additional Reading

NASA. STS-57 Press Kit, June 1993. Contained in NASA Space Shuttle Launches Web site. http://www.ksc.nasa.gov/shuttle/missions/missions.html.

NASA. STS-60 Press Kit, February 1993. Contained in NASA Space Shuttle Launches Web site. http://www.ksc.nasa.gov/shuttle/missions/missions.html.

Page intentionally left blank

CHROMEX Payloads

The CHROMEX program was developed to study the effects of microgravity and space flight on plants. The CHROMEX acronym derives from an early focus on chromosome integrity and the cell division process. After the second payload in the series, the research focus broadened to include plant growth, development, structure, and morphology, but the acronym was retained as the name of the payload series. Understanding such effects is critical to developing bioregenerative life support systems for long-term space travel, since these systems depend on the ability to grow plants reliably in the space environment. CHROMEX experiments are also expected to benefit the agriculture, horticulture, and forestry industries, whose production is dependent on plant growth. CHROMEX payloads fly in the Space Shuttle middeck using the Plant Growth Unit (PGU) to house and sustain specimens.

The first payloads, CHROMEX-01 on STS-29 and CHROMEX-02 on STS-41, were flown in 1989 and 1990, respectively. They were not included in *Life into Space, 1965–1990* and so will be covered in the current volume. Four missions carrying CHROMEX payloads were flown in the 1991–1995 period: STS-54, STS-51, and STS-68 in 1994 and STS-63 in 1995.

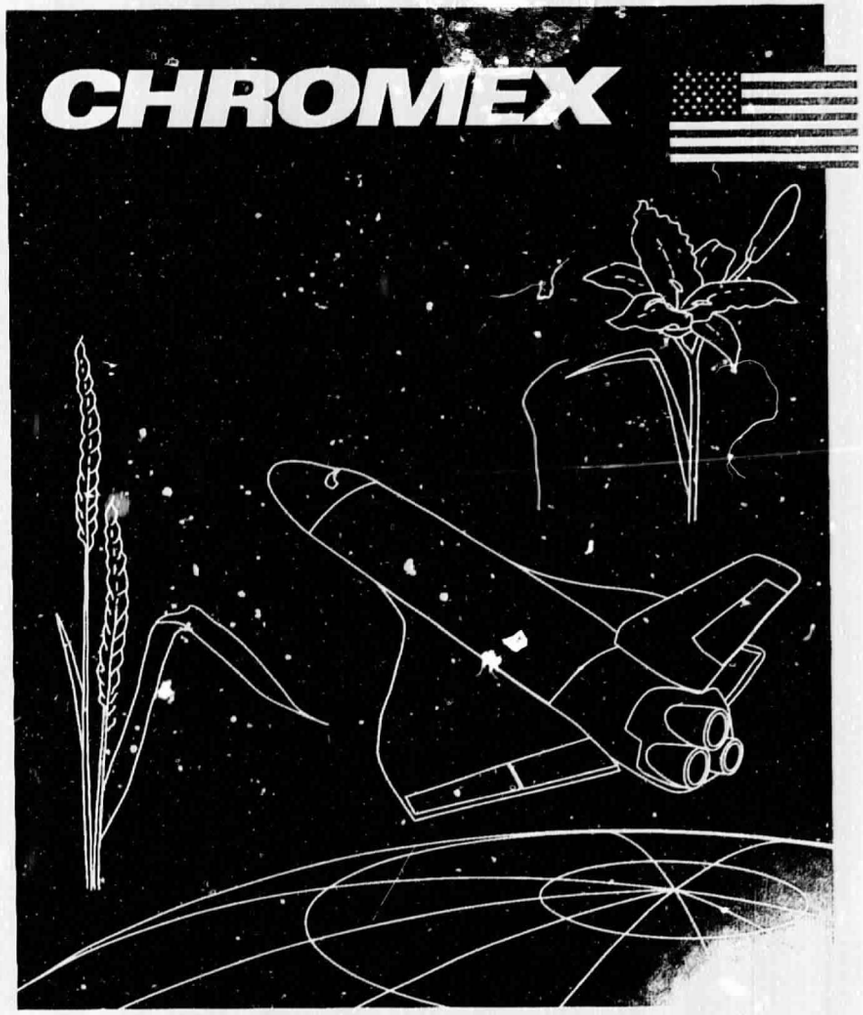

PAYLOAD PROFILE: CHROMEX-01/STS-29

Mission Duration: 5 days **Date:** March 13–18, 1989

Life Sciences Research Objectives

- To observe the rates of cell division and chromosome morphology in plants grown in microgravity

Life Sciences Investigations

- Plant Biology (CHROMEX1-1)

Organisms Studied

- *Hemerocallis* (daylily)
- *Haplopappus gracilis* (haplopappus)

Flight Hardware

- Plant Growth Unit (PGU)
- Atmospheric Exchange System (AES)

CHROMEX-01/STS-29

Mission Overview

The STS-29 mission was launched on the Space Shuttle Discovery on March 13, 1989. After a five-day space flight, Discovery landed at Edwards Air Force Base, California on March 18. Five crew members flew aboard the shuttle.

The primary mission objective was to deploy the third Tracking and Data Relay Satellite (TDRS-D). Included among the secondary objectives was flying CHROMEX-01, the first Shuttle payload to be completely managed by Kennedy Space Center (KSC).

Life Sciences Research Objectives

The CHROMEX-01 experiment was designed to determine whether the roots of a plant develop similarly in microgravity and on Earth. One objective was to test whether the normal rate, frequency, and patterning of cell division in the root tip can be sustained in microgravity. Another objective was to determine whether the fidelity of chromosome partitioning is maintained during and after flight.

Life Sciences Payload

Organisms

Shoots of cell culture-derived daylily (*Hemerocallis* cv. Autumn Blaze) and both tissue cultured and seedling clones of haplopappus (*Haplopappus gracilis*) were used in the experiment. The two species were selected so that both major groups of the plant kingdom would be

Daylily (*Hemerocallis* cv. Autumn Blaze)

represented. The daylily represented herbaceous monocotyledonous plants and the haplopappus represented annual dicotyledonous plants. Haplopappus is valuable for studies of chromosome behavior because it has only four chromosomes in its diploid state. Daylily was chosen for the study because it has special karyotypic features (features related to the number, size, and configuration of chromosomes seen in the metaphase portion of mitosis) and it is a species for which a great deal of culture technology has been developed.

Hardware

The plants were flown in the Plant Growth Unit (PGU) located in the middeck of the Shuttle. The PGU occupies a single middeck locker and has a timer, lamps, heaters, and fans to provide temperature regulation and lighting. The unit also has a data acquisition system and displays, which allow the crew to monitor equipment status and environmental parameters. Power is supplied by the Shuttle electrical system.

The PGU can hold up to six sealed Plant Growth Chambers. One of the chambers can be replaced with an Atmospheric Exchange System (AES) that filters the air in the cabin before pumping it through four of the remaining five chambers. When the AES is used, one chamber acts as a control with no air exchange.

Each chamber consists of a metal alloy base and a Lexan lid. The chamber base contains a temperature probe. The chambers provided with air exchange have an air input and exit tube. The AES also contains a dosimeter, which provides data on the radiation environment to which the payload is exposed.

Operations

Preflight

Each chamber of the PGU had a horticultural foam block with four slits inserted into the base of the chamber. Five plants were inserted into each slit. Plants received nutrient medium via capillary action from the horticultural foam. Plant specimens were placed in the PGU one day before the launch and the unit was loaded into the Shuttle middeck about 14 hours before launch.

Inflight

Throughout the flight, the crew conducted daily checks of the experiment hardware to ensure proper function.

The light cycle in the PGU was set to 16 hours of light and 8 hours of darkness each day. The lights were turned off on the second flight day in an attempt to cool down the unit, which was thought to have a high temperature due to readings provided erroneously by a malfunctioning temperature probe. On flight day three, the light cycle was resumed after the crew determined that the probe was malfunctioning and verified the inaccuracy of the temperature readings. Temperatures

The Challenges of Plant Biology Research in Space
Interview with Abraham Krikorian

While working on his doctorate in botany at Cornell University, Abraham Krikorian's advisor encouraged his interest in space life sciences. His advisor had participated in one of the early plant-related workshops on the topic and their research group was subsequently invited to participate in Cosmos 782, the first Soviet biosatellite mission to include U.S. experiments.

They used a somatic embryo system developed in their Cornell lab. "Normally," said Krikorian, "you think of an embryo as being the product of a fusion of sex cells, male and female. Somatic cells, however, under certain circumstances, can be stimulated to create structures that look very similar to sexually derived embryos." For their group's purposes, somatic cells were ideal. "They're clonal. They don't take up much space. They can be grown in the dark. You can get lots of them. And it became clear that we could get a lot of information, if everything went right, in a small space."

Over the course of his research, he has observed a delay in development in embryos exposed to microgravity. However, "there should be no implications of that finding for growing multiple generations of higher plants in space. I think a plant is evolutionarily so strongly built, it can withstand an awful lot of stress and insult."

If a system can be developed for the long-term maintenance of somatic embryos in space, Krikorian sees a future for them in closed-system life support, supplementing or even replacing seeds. "You send up somatic cells that are capable of making embryos. You can store these. As you need them, you can take them out of the storage area, scale up their growth, and stimulate their development, so that this little package of what are called totipotent cells can make full plants. When you're finished with them, take some of the embryos that haven't grown all the way, tuck them away, and store them. And this way you have a tool to manage plant germ plasm in space, a very powerful tool."

Krikorian, now at the State University of New York at Stony Brook, believes that the future challenge to developing such a system is collaboration. After 30 years of research, he states that so far "life sciences missed the opportunity to broaden the approach to dealing with experimentation in space. It could have been much more interdisciplinary and multidisciplinary than it's turned out to be. Botanists and biologists and animal developmentalists, they know how to do their own thing. But they're going to be able to do a much better job if they can interact with mechanical engineers, biophysicists, soil physicists, people who understand the physical factors as they're affected in the low-G environment. We now know that the vast majority of problems with younger, less developed plant cells in space aren't even biological. They're due to the physical environment, like how gasses diffuse, how water evaporates and makes films, or doesn't make films."

He emphasizes that this is not an intellectual shortcoming on the part of the scientists. "No ordinary plant biologist or animal biologist, for instance, is going to be in a very strong position to attack these issues by himself, using the biological perspective. They're going to have to work intimately with people who understand the physics. It's a real challenge, and little of this has happened yet. In fact, all these separate disciplines, they don't talk to each other. You have to break down barriers, you have to have someone say, 'Look, you people are going to work together.'"

Along with cooperation, Krikorian emphasizes the importance of keeping an open mind in research. "In my own work, we've made a lot of interesting discoveries that would never have been made if the challenges of doing flight experiments in space hadn't come up." He believes strongly in having the freedom to explore. Often, people ask him what he expects to learn from an experiment. To that he replies, "How do I know what I'm going to learn? We're going to test this, but we're going to keep our eyes open. And it's frequently the outcome of the phrase 'we're going to keep our eyes open' that gives you the best results."

during the flight fluctuated primarily between 25 and 26 °C but ranged from 21.5 to 27.5 °C.

Postflight

After the Shuttle landed, the specimens were recovered and photographed. New roots initiated in space were analyzed in a ground laboratory as they began their first cell division cycle.

An asynchronous ground control experiment was conducted in September 1989 in the Orbiter Environmental Simulator (OES). The OES is a modified environmental chamber at KSC whose temperature, humidity, and CO_2 level are electronically controlled based on downlinked environmental data from the orbiter. Thus the plants within the chamber are exposed to environmental conditions that are similar to those experienced by the flight group during the mission.

Results

While shoot growth rate was lower among the flight specimens, root growth was 40 to 50 percent greater. Root growth occurred in random directions in space while being positively gravitropic in the ground controls. Roots were generated in several ways: 1) laterally from preexisting roots, the tips of which were severed at the time of plantlet insertion into the growth substrate; 2) adventitiously (appearing in an abnormal place, as a root on a stem), from the basal ends of micropropagated shoots; and 3) *de novo* (i.e., starting from nothing, meaning there was no preexisting root primordium from which the root originated) from roots that emerged during the period in space.

The number of cell divisions observed in flight materials was uniformly lower than that observed in ground controls. Chromosomal aberrations were absent from the ground-control materials but present in 3 to 30 percent of the dividing cells in flight specimen root tips fixed at recovery. The exact cause of these abnormalities is not known, but dosimetry data suggested that radiation alone was not sufficient to explain the results.

Additional Reading

Levine, H.G., R.P. Kann, and A.D. Krikorian. Plant Development in Space: Observations on Root Formation and Growth. In: *Fourth European Symposium on Life Sciences Research in Space*, European Space Agency SP-307. Noordwijk, The Netherlands: ESA Publications Division, 1990, pp. 503–508.

Levine, H.G., R.P. Kann, S.A. O'Connor, and A.D. Krikorian. Preliminary Results from the Chromosomes and Plant Cell Division Experiment (Chromex) Flown Aboard Shuttle Mission STS-29. *American Society for Gravitational and Space Biology Bulletin*, vol. 4(1), October 1990, pp. 78.

NASA. STS-29 Press Kit, March 1989. Contained in NASA Space Shuttle Launches Web site. http://www.ksc.nasa.gov/shuttle/missions/missions.html.

PAYLOAD PROFILE: CHROMEX-02/STS-41

Mission Duration: 5 days **Date:** October 6–10, 1990

Life Sciences Research Objectives
- To observe the rates of cell division and chromosome morphology in plants grown in microgravity

Life Sciences Investigations
- Plant Biology (CHROMEX2-1)

Organisms Studied
- *Hemerocallis* cv. Autumn Blaze (daylily)
- *Haplopappus gracilis* (haplopappus)

Flight Hardware
- Plant Growth Unit (PGU)
- Atmospheric Exchange System (AES)
- Gas Sampling Kit

CHROMEX-02/STS-41

Mission Overview

The Space Shuttle Discovery's STS-41 mission was launched on October 6, 1990 and landed on October 10, 1990, at Edwards Air Force Base, California. A five-member crew flew aboard the shuttle.

The primary mission objective was to deploy the ESA-built Ulysses spacecraft to explore the polar regions of the sun. One of the secondary objectives was to fly CHROMEX-02, a continuation of the CHROMEX-01 experiment flown on STS-29 in 1989. Like its predecessor, CHROMEX-02 was managed by Kennedy Space Center.

Haplopappus (*Haplopappus gracilis*)

Life Sciences Research Objectives

CHROMEX-02 was designed to test whether the normal rate, frequency, and patterning of cell division in the root tip can be sustained in microgravity and to determine whether the fidelity of chromosome partitioning is maintained during and after flight.

Life Sciences Payload

Organisms

Shoots of cell culture-derived daylily (*Hemerocallis* cv. Autumn Blaze) and tissue cultured haplopappus (*Haplopappus gracilis*) were used in the experiment. Four different strains of haplopappus with different physiological and morphological characteristics were used: two aseptic clones, each generated from a single seedling; and two tissue-culture-derived lines.

Hardware

The hardware used was identical to that of CHROMEX-01. Plants were flown in the Plant Growth Unit (PGU). An Atmospheric Exchange System (AES) flew inside the PGU. For general descriptions of the PGU and the AES, see CHROMEX-01.

Operations

Preflight

Twenty-five shoots derived from aseptic suspension cultures of the monocot daylily and 75 plantlets of the dicot haplopappus had their roots severed prior to flight and were grown aseptically for four days in five Plant Growth Chambers on horticultural foam containing growth medium. The major change in protocol between this flight and CHROMEX-01 was the use of extensively washed horticultural foam, which necessitated the addition of a wetting agent to the medium to facilitate its uptake into the foam matrix. The foam was washed to help prevent potentially detrimental components from leaching out of the foam and possibly contributing to the chromosomal abberations. Plant specimens were placed in the PGU one day before the launch. The unit was loaded into the Shuttle middeck 14 hours before launch.

Inflight

A two-hour delayed synchronous ground control experiment was conducted in the Orbiter Environmental Simulator (OES). For a general description of the OES, see CHROMEX-01.

The crew conducted a single inflight gas sampling procedure and a daily check of the experiment hardware to ensure proper function.

Postflight

After the Shuttle landed, the specimens were recovered and photographed. The space-grown root tips were fixed and subsequently examined for rates of cell division and chromosomal aberrations. Specimens were also used for overall shoot and root growth measurements. Selected individual specimens were successfully retrieved intact, grown through a full life cycle, and allowed to produce progeny for multigenerational postflight studies on the ground.

Results

Root growth occurred randomly in all directions in space. In contrast, growth was uniformly positively gravitropic, so that roots grew in the direction of the gravity vector, in ground controls Flight and ground-control plants produced equivalent amounts of tissue and maintained their characteristic root-production patterns. Seedling-derived plantlets produced roots that were numerous but relatively short. Capitulum-derived plantlets (i.e., those derived from plants committed to the "flow-

ering" developmental pathway) produced fewer roots, but they were on average longer than those of the seedling-derived plantlets. Capitulum-derived plantlets are genetically disposed from their phenotype to have fewer roots because the energy is directed at producing the flower, whereas plantlets derived from seedlings would expect to have relatively normal root development because the seedling is directing development of the whole plant. The clonal root phenotype was not changed in space, at least for the short duration of the experiment. However, plantlets from both sources exhibited total root-production values that were 67 to 95 percent greater than those obtained in their ground-control counterparts. Microgravity may have brought about an altered moisture distribution pattern in the foam growth substrate, giving a more moist and thereby more favorable environment for root formation.

Additional Reading

Levine, H.G., R.P. Kann, and A.D. Krikorian. Plant Development in Space: Observations on Root Formation and Growth. In: *Fourth European Symposium on Life Sciences Research in Space*, European Space Agency SP-307. Noordwijk, The Netherlands: ESA Publications Division, 1990, pp. 503–508.

NASA. STS-41 Press Kit, October 1990. Contained in NASA Space Shuttle Launches Web site. http://www.ksc.nasa.gov/shuttle/missions/missions.html.

PAYLOAD PROFILE: CHROMEX-03/STS-54

Mission Duration: 6 days **Date:** January 13–19, 1993

Life Sciences Research Objectives

- To observe the effects of microgravity on seed development and the effects of weightlessness on plant reproduction

Life Sciences Investigations

- Plant Biology (CHROMEX3-1)

Organisms Studied

- *Arabidopsis thaliana* (mouse-ear cress)

Flight Hardware

- Plant Growth Unit (PGU)

CHROMEX-03/STS-54

Mission Overview

The six-day STS-54 mission was launched on the Space Shuttle Endeavour on January 13, 1993. It landed on January 19. A five-member crew flew aboard the Shuttle.

The primary mission objective was to deploy the fifth of NASA's Tracking and Data Relay Satellites, which form a space-based network providing communications, tracking, telemetry, data acquisition, and command services for NASA spacecraft. A number of secondary objectives were also accomplished during the mission.

Secondary payloads included the second in the series of Physiological and Anatomical Rodent Experiments (PARE.02) sponsored by Ames Research Center and CHROMEX-03, sponsored by Kennedy Space Center.

Life Sciences Research Objectives

Many space flight experiments have been conducted using plants. Most of these plants have shown poor vigor and have failed to reproduce successfully. In order to successfully provide bioregenerative life support (life support using plants for food, water, and waste removal), it is important to understand the reasons for these space flight effects.

CHROMEX-03 was designed to study how reproductive processes, and particularly seed development, are affected by exposure to the microgravity environment.

Life Sciences Payload

Organisms

Mouse-ear cress (*Arabidopsis thaliana*) plants were used in the experiment. The flight and ground control groups each contained 36 plants. The plants were launched in the preflowering stage (14 days).

This species is a flowering herb that is widely used for research in plant genetics because its genome size and short life cycle (45 days) make it an ideal candidate for gene mapping studies. Mouse-ear cress was also chosen because its small size allowed it to fit easily into the experiment hardware.

Hardware

The plants were housed in the Plant Growth Unit (PGU). For a general description of the PGU, see CHROMEX-01.

Operations

Preflight

Seeds were sown on agar 14 days prior to loading into the Plant Growth Chambers so that the plants would be developing flowers on orbit. The chambers were loaded into the PGU and then into the Shuttle middeck.

Inflight

A 48-hour delayed synchronous ground control experiment was conducted in the Orbiter Environmental Simulator (OES). For a general description of the OES, see CHROMEX-01

The only experiment operation the crew performed was to conduct a daily check of the experiment hardware to ensure proper function.

The plants reached the flowering stage on orbit and naturally occurring pollination of the flowers took place during the flight period.

Postflight

After the Shuttle landed and the plants were recovered, reproductive leaf and root structures were preserved and subjected to morphological, histological, and biochemical analyses. Flowering material was examined by light and electron microscopy. Enzyme activity in the roots and leaves was also examined.

Results

There were striking differences between the flight-grown mouse-ear cress plants and the ground controls. Reproductive development was aborted at an early stage in the flight material in both male and female reproductive structures. Flight foliage

Mouse-Ear Cress (*Arabidopsis thaliana*)

had significantly lower carbohydrate content than foliage of ground controls, and root alcohol dehydrogenase levels were higher in space flight tissue.

Additional Reading

NASA. STS-54 Press Kit, January 1993. Contained in NASA Space Shuttle Launches Web site. http://www.ksc.nasa.gov/shuttle/missions/missions.html.

PAYLOAD PROFILE: CHROMEX-04/STS-51

Mission Duration: 10 days **Date:** September 12–22, 1993

Life Sciences Research Objectives

- To observe the effects of microgravity on seed development and plant reproduction
- To examine the rate and extent of photosynthesis and biomass generation in microgravity
- To observe the rates of cell division and chromosome morphology in plants grown in microgravity

Life Sciences Investigations

- Plant Biology (CHROMEX4-1, 2, 3)

Organisms Studied

- *Arabidopsis thaliana* (mouse-ear cress)
- *Triticum aestivum* (Super-Dwarf wheat)

Flight Hardware

- Plant Growth Unit (PGU)

CHROMEX-04/STS-51

Mission Overview

The STS-51 mission began with the launch of the Space Shuttle Discovery on September 12 and ended with its landing on September 22. There were five crew members onboard the Shuttle during its 10-day mission.

The primary mission objectives were to deploy NASA's Advanced Communications Technology Satellite/Transfer Orbit Stage payload and to deploy and retrieve a German-built satellite called the Orbiting and Retrievable Far and Extreme Ultraviolet Spectrograph-Shuttle Pallet Satellite.

One of the secondary payloads onboard the Shuttle was the fourth in the CHROMEX series. Like the previous payloads, CHROMEX-04, which contained three plant biology experiments, was managed by Kennedy Space Center.

Life Sciences Research Objectives

The first of the experiments in the CHROMEX-04 payload was a repeat of the CHROMEX-03 experiment designed to study the disturbances in seed production that occur in microgravity.

The second experiment replicated the CHROMEX-01 and -02 experiments but used Super-Dwarf wheat rather than the daylily and haplopappus plants that were used in the previous two flights. Its objective was to study root growth and cell division in plants exposed to microgravity.

The third experiment was designed to study the processes of cell wall formation and gene expression in microgravity.

Life Sciences Payload

Organisms

Two plant species were used in the three experiments. The seed production experiment used twelve 14-day-old mouse-ear cress plants (*Arabidopsis thaliana*). The cell and chromosome division experiment used 24 three- to six-day-old Super-Dwarf wheat (*Triticum aestivum*) plants, and the plant metabolism and cell wall formation experiment used 24 two-day-old Super-Dwarf wheat plants.

Super-Dwarf wheat is similar to ordinary wheat cultivated in fields, with the exception that it is about eight inches tall at maturity. Its small size makes it a good candidate for space experiments and for use in bioregenerative life support systems since there is limited room on spacecraft.

Hardware

During the flight experiment, all plants were housed in the Plant Growth Unit (PGU). For a general description of the PGU, see CHROMEX-01.

Each experiment used a different support and nutrient delivery system (Fig. 3). The three- to six-day-old Super-Dwarf wheat plants in the cell and chromosome experiment used a Nitex Sleeve/Horticultural Foam system. Plantlet roots were placed in a Nitex mesh sleeve inserted into slots in horticultural foam. The foam was loaded with nutrient solution to provide water and plant nutrients. The two-day-old wheat plants in the cell wall formation experiment used an Agar Bag system. Imbibed seeds were placed in pipette filters which in turn were attached to the top of rectangular polypropylene bags filled with agar. The mouse-ear cress plant experiment used an Agar Tube/Horticultural Foam system. The plants were grown in agar-filled polycarbonate centrifuge tubes, which were inserted into a horticultural foam block for structural support.

Operations

Preflight

Plants for each of the three experiments were loaded into two Plant Growth Chambers one day before launch.

Inflight

A 48-hour delayed synchronous ground control experiment was conducted in the Orbiter Environmental Simulator (OES) using identical hardware and plant specimens. For a general description of the OES, see CHROMEX-01.

The only operation the crew performed was a daily verification of proper hardware function.

Postflight

Following the flight, plant specimens were examined, dissected, and preserved either by freezing or chemical fixation.

Results

Mouse-Ear Cress Plant Study

The experiment found that the plants produced numerous flowers, which had a good appearance except for those in the latest developmental stages. Pollen viability was approximately 50 percent, and light microscope examination of the pollen showed a range of morphologies, from

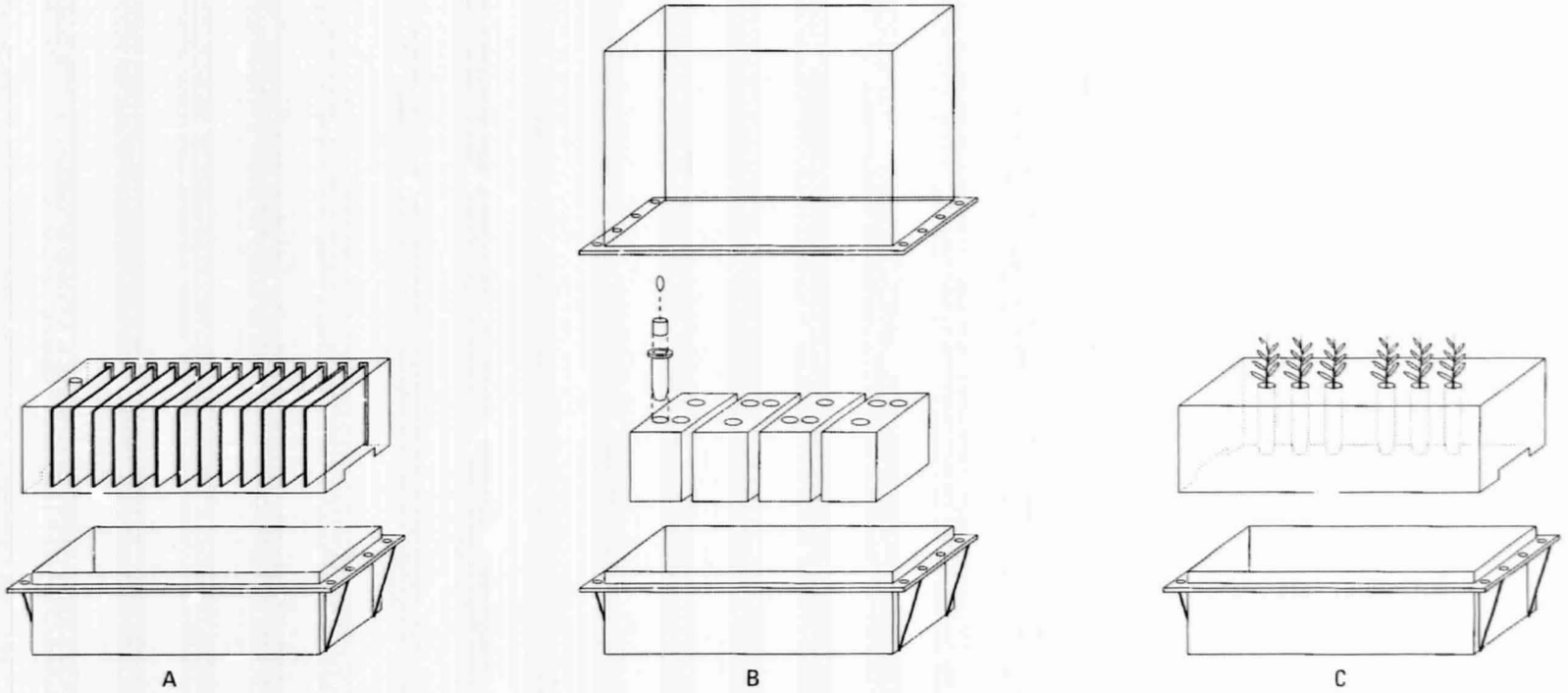

Figure 3. Nutrient delivery systems used on CHROMEX-04. A. Nitex Sleeve/Horticultural system. B. Agar Bag system. C. Agar Tube/Horticultural system.

normal to collapsed. This amount of viable pollen should have been able to fertilize the flowers and initiate embryo development. However, no evidence of this was found, suggesting a pollen transfer problem.

Wheat Studies

In the chromosome and plant cell division experiment, measurements were made of photosynthetic and respiratory rates of the space flight and ground control wheat seedlings at recovery. Postflight measurements revealed that the photosynthetic rate in space-grown plants declined 25 percent relative to the rate in ground control plants.

The results from the plant metabolism and cell wall formation experiment seem to indicate that microgravity does not affect cell wall architecture. Therefore, the cell wall organization has not been affected to such an extent that microfibril architecture is interrupted.

Additional Reading

NASA. STS-51 Press Kit, July 1993. Contained in NASA Space Shuttle Launches Web site. http://www.ksc.nasa.gov/shuttle/missions/missions.html.

PAYLOAD PROFILE: CHROMEX-05/STS-68

Mission Duration: 11 days **Date:** September 30–October 11, 1994

Life Sciences Research Objectives

- To determine whether infertility in space-grown plants is due to the effects of microgravity or to environmental factors such as the lack of air convection

Life Sciences Investigations

- Plant Biology (CHROMEX5-1)

Organisms Studied

- *Arabidopsis thaliana* (mouse-ear cress)

Flight Hardware

- Plant Growth Unit (PGU)
- Atmospheric Exchange System (AES)

CHROMEX-05/STS-68

Mission Overview

The STS-68 mission was launched on the Space Shuttle Endeavour on September 30, 1994. On October 11, Endeavour, with its six-member crew, landed at Edwards Air Force Base, California.

The primary payload was the Space Radar Laboratory, a system for gathering environmental information about Earth. The mission also had several secondary payloads. Biological Research in Canisters 1 (BRIC-01) and CHROMEX-05 were sponsored by Kennedy Space Center.

Life Sciences Research Objectives

The CHROMEX-05 experiment was designed to continue the investigations initiated on the CHROMEX-03 and -04 payloads. It focused on the process of seed production in microgravity. Researchers sought to determine if disturbances in seed production observed in space-grown plants may be due to reduced oxygen transport to the plants, since convective air movements are absent in microgravity. The experiment was also expected to help scientists increase their understanding of the processes of fertilization and development on Earth.

Life Sciences Payload

Organisms

Sixty 13-day-old mouse-ear cress (*Arabidopsis thaliana*) seedlings were studied in the experiment. The flight and ground control groups each contained 30 seedlings.

Mouse-ear cress is a flowering herb widely used for research in plant genetics because its genome size and short life cycle (45 days) make it an ideal candidate for gene mapping studies. The species was also chosen because its small size fits easily into the experiment hardware.

Hardware

The plants were flown in the Plant Growth Unit (PGU). The Atmospheric Exchange System (AES) accompanied the PGU to provide slow purging of the Plant Growth Chambers with filtered cabin air. For general descriptions of the PGU and the AES, see CHROMEX-01.

Operations

Preflight

Thirty seeds were sown on agar 13 days prior to loading into the chambers so that plants would be developing flowers at launch time. The chambers were loaded into the PGU and then into the Shuttle middeck.

Inflight

A 48-hour delayed synchronous ground control experiment was conducted in the Orbiter Environmental Simulator (OES). For a general description of the OES, see CHROMEX-01. The flight plants initiated flowering shoots while on orbit. The only procedure the crew performed was a daily verification of proper hardware function.

Postflight

The PGU was retrieved from the Shuttle two to three hours after landing, and the reproductive material of the plants was immediately processed. Gas samples were taken from the chambers before the plant specimens were retrieved. The processed plant tissue was subjected to *in vivo* observations of pollen viability, pollen tube growth, and esterase activity in the stigma, or fixed for later microscopy.

Results

Under the conditions of this flight, the space-grown plants had reproductive development comparable to that of the ground controls, and immature seeds were produced. These results represent the first report of successful plant reproduction on the Space Shuttle.

Additional Reading

NASA. STS-68 Press Kit, August 1994. Contained in NASA Space Shuttle Launches Web site. http://www.ksc.nasa.gov/shuttle/missions/missions.html.

PAYLOAD PROFILE: CHROMEX-06/STS-63

Mission Duration: 8 days **Date:** February 3–11, 1995

Life Sciences Research Objectives

- To examine the effects of microgravity on aspects of plant cell wall structure

Life Sciences Investigations:

- Plant Biology (CHROMEX6-1)

Organisms Studied

- *Triticum aestivum* (Super-Dwarf wheat)

Flight Hardware

- Plant Growth Unit (PGU)

CHROMEX-06/STS-63

Mission Overview

The STS-63 mission was launched on the Space Shuttle Discovery on February 3, 1995. The eight-day mission ended on February 11. The six-member crew included the first female pilot to fly a space mission and a mission specialist from Russia.

The primary mission objective was to perform a rendezvous and fly-around of the Russian space station Mir to verify flight techniques, communications and navigation interfaces, and engineering analyses associated with Shuttle/Mir proximity operations in preparation for the STS-71 docking mission. STS-63 also marked the third flight of the SPACEHAB module.

Ames Research Center sponsored two payloads on the mission, named National Institutes of Health Cells 3 (NIH.C3) and IMMUNE.2. Kennedy Space Center sponsored two payloads, called Biological Research in Canisters 3 (BRIC.03) and CHROMEX-06.

Life Sciences Research Objectives

Previous experiments conducted in the space environment have demonstrated that cellular changes occur in plants that are grown in space. The CHROMEX-06 experiment examined the effects of microgravity on aspects of cell wall structure, including lignin deposition, hydrogen peroxide concentration, calcium localization, and cell wall anatomy in Super-Dwarf wheat.

Life Sciences Payload

Organisms

Super-Dwarf wheat seedlings were used in the experiment. Both flight and ground control groups contained 72 seedlings. Super-Dwarf wheat is similar to ordinary wheat cultivated in fields, with the exception that it is about eight inches tall at maturity. Its small size makes it a good candidate for space experiments and for use in bioregenerative life support systems since there is limited room on spacecraft.

Hardware

The plants used in the experiment were flown in the Plant Growth Unit (PGU). For a general description of the PGU, see CHROMEX-01.

Operations

Preflight

Twenty-four hours before launch, 12 one-day-old Super-Dwarf wheat seedlings were transferred to each of six Plant Growth Chambers (PGCs). The chambers were placed in a PGU, which was then loaded into the Shuttle.

Inflight

The crew verified proper function of the hardware on a daily basis.

An asynchronous ground control experiment was conducted in the Orbital Environmental Simulator (OES), using identical hardware and plant specimens. For a general description of the OES, see CHROMEX-01.

Postflight

After the flight, specimens were recovered from the Shuttle and taken to a ground laboratory. Gas samples were drawn from the bases of the PGCs in order to assess the levels of carbon dioxide and ethylene within the chambers. Specimens were then retrieved from the chambers and root and shoot length and mass measurements were taken. Salt-soluble extracellular proteins were extracted from leaves, stems, and roots of plants grown in microgravity and from control plants. Tissues were stained for lignin and peroxide content.

Results

Space-grown plants exhibited a variety of effects. The synthesis or evolution of ethylene gas appeared to be inhibited. Lignin accumulated in all leaf and root tissues. Flight plants appeared to have thinner cell walls than ground controls. Their roots tended to be longer and less massive. Alterations in enzyme activity were also seen. The results suggest that a lack of gravity produced genetic alterations that affected many aspects of the plants physiology and development.

Additional Reading

NASA. STS-63 Press Kit, February 1995. Contained in NASA Space Shuttle Launches Web site. http://www.ksc.nasa.gov/shuttle/missions/missions.html.

Page intentionally left blank

Spacelab Life Sciences (SLS) Payloads

The Spacelab Life Sciences (SLS) program was a series of payloads using the facilities of an entire Spacelab module to conduct a variety of life sciences investigations. The SLS-1 mission in 1991 carried the most comprehensive suite of life sciences studies conducted in space since the Skylab 3 mission in 1973. The SLS-2 mission, which flew in 1993, marked the beginning of a new era of space life sciences research. For the first time, rodent dissections were conducted in space. A SLS-3 mission was scheduled for late 1995 but was cut because of budgetary reasons. The mission was to have included the culmination of a long-standing science and engineering collaboration between Ames Research Center and CNES, the French space agency. Much of the SLS-3 science was eventually transferred to the Bion 11 mission, launched in 1996.

The general objective of the research in the SLS program was to study the acute and chronic changes that living systems undergo during exposure to the space environment. In humans, exposure to microgravity leads to loss of calcium, muscle mass, and body mass. Cardiac performance diminishes, and fluids redistribute in the body, affecting the function of the renal, endocrine, and blood systems. Blood volume decreases, and the immune system undergoes changes. The balance and positioning organs of the neurovestibular system adjust their functioning, in an attempt to adapt the organism to an environment where up and down no longer exist.

Experiments for each SLS mission were selected on the basis of their scientific merit and how well they could be integrated into a single payload. Rats were used as experiment subjects on both SLS missions.

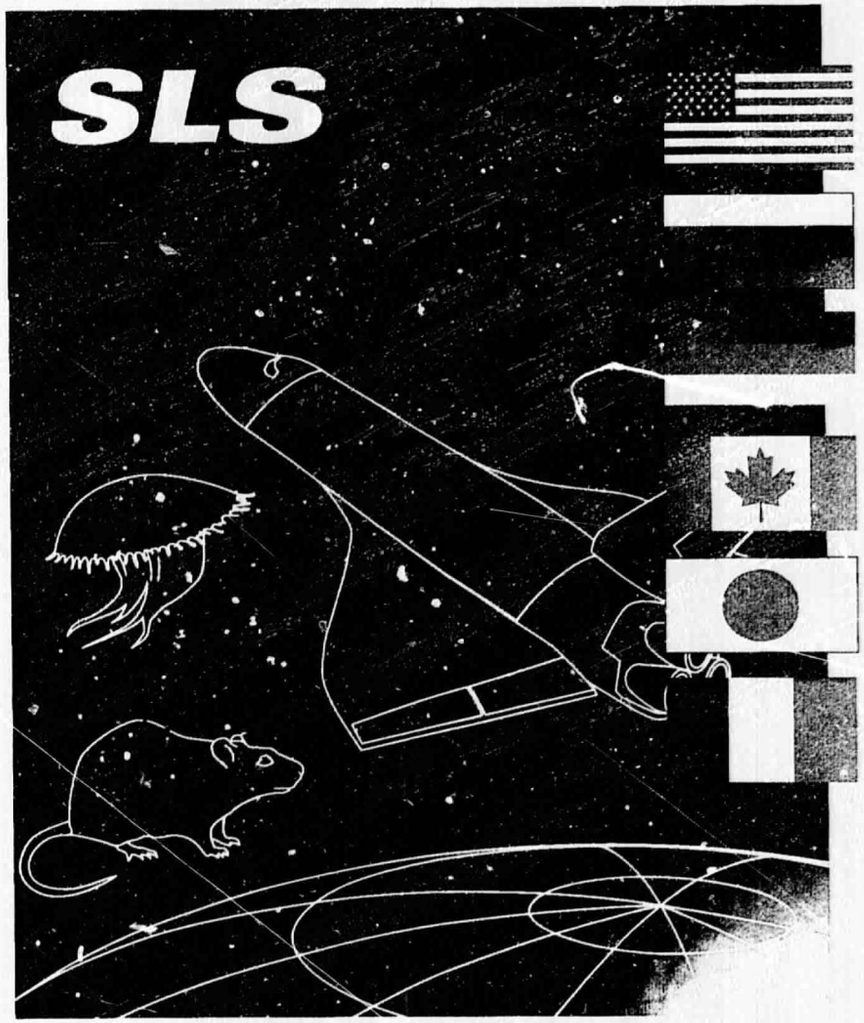

Many of these rat studies were complemented by physiological studies on the astronaut crew. The SLS-1 mission also carried jellyfish, for the study of gravity-sensing organs. SLS-1 was a hardware verification flight, which allowed for testing and verification of the intricate science procedures implemented in SLS-2.

The Spacelab was flown in its long module configuration on both missions. It provided laboratory facilities where the crew could conduct the experiment procedures required by the various investigations. Because the SLS missions were dedicated entirely to life sciences research, crew members were able to devote more of their busy work schedules to conducting the experiments than is usually possible. The crews on both missions included payload specialists as well as career astronauts. The payload specialists were life scientists who had undergone a period of astronaut training. Including payload specialists in a crew allows maximum possible scientific yield. Their science training provides the ability to modify experiment procedures when unexpected situations arise or to salvage experiments that might be at risk because of equipment malfunction.

Extensive biospecimen sharing programs were implemented on both missions. Biospecimen sharing is a means of increasing the scientific yield from a particular mission. When it is anticipated that the planned flight investigations will not require all available tissue samples, or tissue remains unused postflight, NASA issues a Request for Proposals to the science community. Scientists who require no additional inflight procedures can gain access to biospecimens that have been exposed to microgravity, a rare commodity. Through the program, tissues from the SLS missions were distributed to researchers from the U.S. and several other countries. Those tissues not immediately distributed are preserved and retained by the Ames Research Center Data Archiving Project, for future use by scientists.

The SLS program was an international collaborative project, as a result of the biospecimen sharing program. The collaboration not only allowed NASA to mitigate the cost of flying the payloads and to share scientific and technological knowledge, but also paved the way for U.S. cooperation with international partners on future missions. Two SLS payloads were flown during the 1991–1995 time period: STS-40, in 1991; and STS-58, in 1993.

PAYLOAD PROFILE: SLS-1/STS-40

Mission Duration: 9 days **Date:** June 5–14, 1991

Life Science Research Objectives

- To study structural and functional changes that occur in the rat during microgravity exposure
- To study the effect of microgravity on the development of gravireceptors and behavior of jellyfish
- To evaluate the functionality of experiment hardware in the space flight environment

Life Science Investigations

- Bone Physiology (SLS1-1, 2, 3, 4)
- Developmental Biology (SLS1-5)
- Endocrinology (SLS1-6, 7, 8)
- Hardware Verification (SLS1-9, 10)
- Hematology (SLS1-11, 12)
- Immunology (SLS1-13, 14)
- Metabolism and Nutrition (SLS1-15, 16, 17)
- Muscle Physiology (SLS1-18, 19, 20, 21)
- Neurophysiology (SLS1-22, 23, 24, 25, 26, 27, 28, 29, 30, 31)
- Pulmonary Physiology (SLS1-32)
- Renal, Fluid, and Electrolyte Physiology (SLS1-33)

Organisms Studied

- *Rattus norvegicus* (rat)
- *Aurelia aurita* (jellyfish)

Flight Hardware

- Ambient Temperature Recorder (ATR-4)
- Animal Enclosure Module (AEM)
- AEM Water Refill Box
- Biotest Reuter Centrifugal Sampler (RCS)
- General Purpose Transfer Unit (GPTU)
- General Purpose Work Station (GPWS)
- Jellyfish Kits and Kit Containers
- Olympus 802 Camcorder
- Refrigerator/Incubator Module (R/IM)
- Research Animal Holding Facility (RAHF)
- Small Mass Measuring Instrument (SMMI)

Spacelab Life Sciences 1/STS-40

Mission Overview

The STS-40 mission was launched on the Space Shuttle Columbia on June 5, 1991. After a nine-day flight, Columbia landed at Edwards Air Force Base, California on June 14, 1991. The mission, managed by NASA Johnson Space Center, carried a crew of seven. Scientists from

Russia, France, Germany, and Canada participated in the mission in the biospecimen sharing program. The mission was the first in which animals were allowed to float freely in microgravity outside of their cages and the first time jellyfish were flown in space.

The primary mission objective was to conduct the experiments in the Spacelab Life Sciences 1 (SLS-1) payload located within the Spacelab module. The goals of Ames Research Center (ARC) were to prove the functionality of the improved Research Animal Holding Facility (RAHF) and ensure that the RAHF and General Purpose Work Station (GPWS) maintained particulate containment relative to the Spacelab environment during all operations. Rats and jellyfish served as subjects for the seven experiments sponsored by ARC. Scientists sponsored by ARC also conducted 17 collaborative experiments with Russian scientists on rat tissue specimens. In addition, through the SLS-1 biospecimen sharing program, more than 6000 rat tissue samples were distributed to scientists from participating countries for supplementary studies.

Life Sciences Research Objectives

The primary objective of SLS-1 was to conduct two hardware verification tests. A Particulate Containment Demonstration Test (PCDT) was to verify that the integrated system of animal housing and transfer hardware functioned in microgravity, without contaminating the crew environment. Specifically, the test was designed to demonstrate that the RAHF and GPWS can contain solid particles down to 150 microns in size, that the GPWS can contain fluids, and that the General Purpose Transfer Unit (GPTU), hardware designed to transfer research subjects between the RAHF and GPWS, can maintain containment during transfer operations.

The Small Mass Measuring Instrument (SMMI) test was designed to verify functional stability of the instrument in microgravity and to give crew members some experience in operating the device. The SMMI was to be used to determine the mass of rodents and tissues on the SLS-2 mission, since conventional weight measurements are not possible in microgravity.

The requirements of the hardware test determined the number and habitation conditions of the rodents. Within these constraints, SLS-1 provided an opportunity to conduct many life sciences studies. The rat studies on SLS-1 were designed to examine the structural and functional changes that occur in response to space flight. Muscle experiments examined the adaptation of muscle tissue to microgravity. Hematology experiments examined changes in blood volume and cellular components and alterations in the process of blood cell formation. Studies of the vestibular system focused on changes in gravity receptors during exposure to microgravity and adaptation on return to the Earth's gravitational field. Calcium physiology studies were expected to clarify and expand on data from previous Cosmos biosatellite missions, which had shown that space flight causes a negative calcium balance, decreased bone density, and inhibited bone formation. Rats were flown in two cage configurations in order to compare the responses of singly housed and group-housed subjects.

The jellyfish development and behavior experiment had two objectives. One was to determine whether the asexually reproducing polyp form of jellyfish could metamorphose normally into the sexually reproducing ephyra form (Fig. 4). The other was to determine whether the development of gravity-sensing organs and swimming behavior are affected by microgravity.

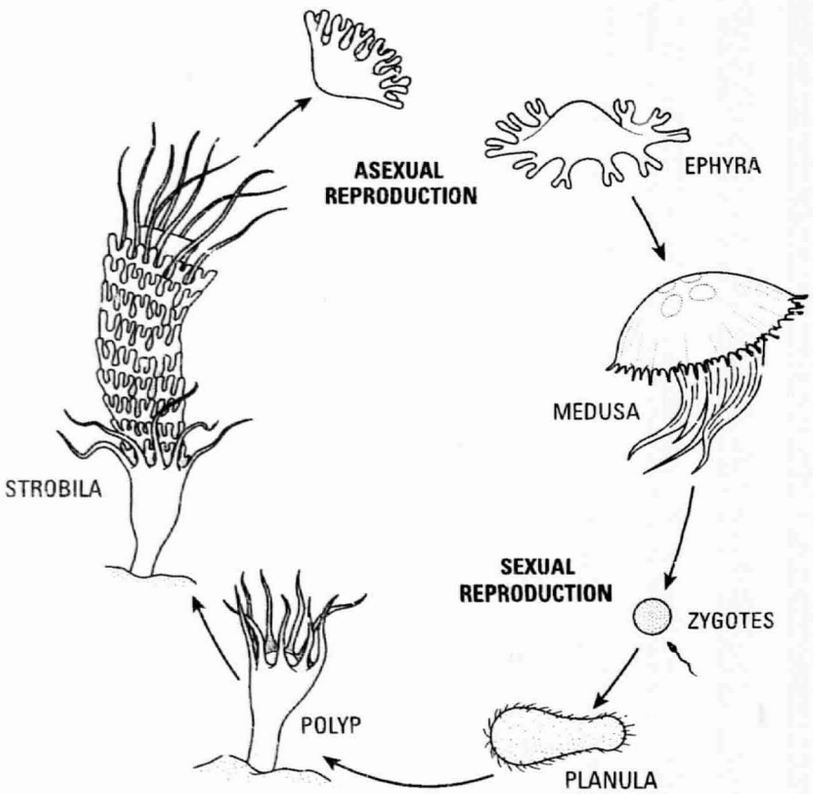

Figure 4. *Aurelia aurita* undergoes both asexual and sexual reproduction during its life cycle. Sessile polyps metamorphose into strobilae, which produce ephyrae by asexual budding. The ephyrae mature into medusae, which produce into zygotes and reproduce sexually. Planula larvae that hatch from fertilized eggs eventually attach to a new substrate and develop into polyps.

Life Sciences Payload

Organisms

The rat experiments used 74 male specific pathogen free Sprague-Dawley rats (*Rattus norvegicus*). The flight group contained 29 rats, while the ground control groups contained 45 rats. At the time of launch, the rats weighed between 250 and 300 g and were nine weeks old.

Approximately 2400 moon jellyfish (*Aurelia aurita*) were flown in two groups. One group was in the polyp stage at launch, while the other was in the ephyra stage.

Hardware

The General Purpose Work Station (GPWS) was evaluated and verified in the PCDT using rodents and cages housed in the RAHF. The GPWS is a laboratory work bench and biohazard cabinet for experiment operations in the Spacelab. It provides containment of chemical vapors, liquids, and debris released within it during experiments, such as dissections or specimen fixation. The crew can perform various procedures inside the cabinet by inserting their arms into the gauntlets attached to ports at the front and right side of the cabinet. The gauntlets stop at the wrists, and crew members wear disposable surgical gloves after inserting their arms. A window on one side of the cabinet allows interface with the General Purpose Transfer Unit (GPTU), which facilitates rodent cage transfer from the RAHF to the GPWS. The GPTU has a frame with a sliding access door that interfaces with both the RAHF and the GPWS. A sock attached to the frame encloses the rodent cage during transfer. The GPTU is specifically designed to provide a second level of particulate containment.

A modified version of a commercial air sampling device, the Biotest Reuter Centrifugal Sampler (RCS), was used in the PCDT to collect released particulates for postflight analysis.

The Small Mass Measuring Instrument (SMMI) was tested to verify its calibration-maintenance capabilities and was used to measure the mass of rodents and tissue samples by use of inertial methods. While weight varies with gravitational force, mass remains constant. The weight equivalent 1 G conditions can be calculated using a simple mathematical formula.

Rats were housed in two habitat types: the Animal Enclosure Module (AEM) and the Research Animal Holding Facility (RAHF). The AEM is a self-contained animal habitat, storable in a Shuttle middeck locker, which provides ventilation, lighting, food, and water for a maximum of six adult rats. Fans inside the AEM circulate air through the cage, passively controlling the temperature. A filtering system controls waste products and odors. Although the AEM does not allow handling of contained animals, a clear plastic window on the top of the unit permits viewing or video recording. The Water Refill Box enables inflight replenishment of water.

The RAHF is a general use animal habitat designed for use in the Spacelab module. Animal-specific cage modules are inserted, as needed, to provide appropriate life support for rodents. Cages can be removed from the RAHF to accommodate inflight experiment procedures. The RAHF habitat consists of rodent cage assemblies, each of which carries two rats separated by a divider. The environmental control system actively controls temperature and passively controls humidity, carbon dioxide, and oxygen levels, and maintains particulate containment during cage removal. The feeding system supplies rodent food bars on a demand basis. The water system provides pressurized, regulated water to rodents. The waste management system collects urine and feces in a waste tray and neutralizes odor. The lighting system provides a controllable light cycle for the cages. Activity monitors in each cage record general movement using an infrared light source and sensor. The data system collects environmental and animal data that is passed on to the Spacelab data system for display, recording, and downlink to the ground.

Jellyfish Kits, placed in the Shuttle middeck, were used to maintain jellyfish during flight, measure the radiation dose, and apply fixative to specimens. Three of the four kits contained polyester bags with polyethylene lining, and the remaining kit contained polyethelene culture flasks, which allowed filming of the live specimens. Both bags and flasks were filled with artificial sea water and air. Kit #1 contained 18 bags, six of which contained radiation dosimeters. Kit #2 contained syringe/bag assemblies with one to three syringes of fixative attached. Kit #3 was used to hold the fixed specimens from Kit #2. Kit #4 contained the culture flasks.

The Refrigerator/Incubator Module (R/IM) maintained a constant temperature of 28 °C for the jellyfish. The R/IM is a temperature-controlled holding unit flown in the Shuttle middeck that maintains a cooled or heated environment. It is divided into two holding cavities and can contain up to six shelves of experiment hardware.

An Ambient Temperature Recorder (ATR-4) accompanied each AEM and the R/IM. The ATR-4 is a self-contained, battery-powered package that can record up to four channels of temperature data.

An Olympus 802 camcorder was used to film the jellyfish in flasks. The camcorder, an 8-mm commercial model with standard features, was

VARIABLES	Flight RAHF-Caged	Flight AEM-Caged				
Number of Rats	19	10	20	10	10	5
Launch/ Recovery Stress	actual	actual	none	none	none	none
Gravitational Force	micro-G	micro-G	1 G	1 G	1 G	1 G
Food Available	ad lib	ad lib	ad lib	ad lib	ad lib	ad lib
Housing	single	group (5 per cage)	single	group (5 per cage)	single	single
Environment	spacecraft conditions	spacecraft conditions	simulated spacecraft conditions	simulated spacecraft conditions	standard lab conditions	standard lab conditions

Table 1. Flight and Control Groups for SLS-1 Rodents.

mounted on a multiuse bracket assembly, which also held the jellyfish specimen flask at a fixed distance.

Operations

Preflight

Three days before launch, flight and control rat groups were selected based on health, behavioral, and experimental criteria. The flight rats were chosen for two groups: 10 housed in the AEM and 20 housed in the RAHF. Each flight group had a synchronous ground control counterpart with an identical number of rats and a basal control counterpart with half the number of rats (Table 1). For the bone experiment, the rats were injected with the markers calcein and demeclocycline. The hematology experiment required blood draws and injection of multiple radioisotopes.

The RAHF cages containing the flight subjects were loaded into the Spacelab about 29 hours before the flight. On the day of launch, a water lixit failed to function in one of the RAHF rodent cages. That cage was flown empty, resulting in a RAHF flight group of 19 rats. To allow for late loading at about 15 hours before launch, the AEMs were placed in the middeck rather than the Spacelab.

Two days before launch, 2478 jellyfish arrived at Kennedy Space Center in a portable incubator. The jellyfish were divided into 32 groups. Six groups of 25 jellyfish each were loaded into Kit #4 flasks for the jellyfish behavior experiment. The remaining 26 groups were placed in Kit #1 and Kit #2 for the developmental studies. One hundred polyps were

placed in each of the 18 Kit #1 specimen bags, while 66 polyps were placed in the eight Kit #2 bags. Polyps in six Kit #1 and two Kit #2 specimen bags were treated with iodine or thyroxine, substances that induce metamorphosis, so that the jellyfish would metamorphose into strobilae during the flight. Six more groups of Kit #1 polyps were treated 24 hours before launch. Two Kit #1 groups remained untreated.

Inflight

For the PCDT, the crew emptied particulates consisting of food bar crumbs, rodent hair, and simulated feces (in the form of black-eyed peas) into two empty rodent cages in the RAHF by unsheathing particulate-filled balloons during the flight. The RCS was then placed in front of each cage to collect any released particulates. Fine mesh screens, on which particulates were captured, were stowed away for postflight analysis. Inflight results of the test showed high levels of containment, allowing the crew to transfer some of the rats to the GPWS from the RAHF. Also, rats were released to float freely within the GPWS, providing the crew and scientists on the ground the opportunity to observe animal behavior outside cages in microgravity. Though unplanned, this activity was vital in planning SLS-2 operations and predicting the animal reactions within the GPWS.

The crew also tested the function of the SMMI during the flight. They confirmed that the instrument was stable in microgravity and practiced making rodent and tissue measurements to be performed on SLS-2.

For the rat studies, light in the AEMs and RAHF was cycled at 12 hours of light and 12 hours of darkness. Temperature in the AEM was 27 to 32 °C and temperature in the RAHF was maintained at 25±2 °C. The crew observed and videotaped the rats in the RAHF and AEMs, refilled water in the AEMs, and performed feeder changeouts on the RAHF.

The crew performed various procedures to repair hardware malfunctions. Despite their efforts, some hardware units did not function as well as expected during the mission. Three of the RAHF activity monitors failed inflight, but food and water consumption data were used to determine that the animals were active. The RAHF drinking water pressure transducer failed on the fifth flight day. Water consumption data were not accurate because of variability in calibrating cage-by-cage delivery against the computer system.

The crew conducted several experiment operations on the jellyfish packages. These activities were conducted inside the GPWS for safety reasons, even though the Jellyfish Kits provide three containment layers of polyethylene. Eight hours after launch, the crew removed kit container #2 from the Refrigerator/Incubator Module and injected iodine into three specimen bags and thyroxine into three specimen bags in order to induce metamorphosis of the jellyfish polyps. One group of jellyfish ephyrae in flasks were videotaped on the second, third, and fourth flight days. Two other groups of jellyfish were videotaped on the fifth and sixth flight days. On the eighth day, the crew injected glutaraldehyde into six of the bags to fix the jellyfish and stored the bags in kit container #3 in the Spacelab Refrigerator.

Ground control studies for the jellyfish experiment included 32 groups of jellyfish, 14 of which formed a synchronous control. The remaining 18 groups formed a one-week delayed-synchronous control.

Postflight

Shortly after the Shuttle landed, the flight and control rats were removed from their habitats, weighed, and assessed for general health. They were then photographed and videotaped. Immediately after touch-

Biospecimen Sharing and Tissue Archiving
Interview with Paul X. Callahan

Paul Callahan manages the Ames Research Center (ARC) Data Archive Project, which archives the data and biospecimens from ARC-sponsored payloads. With a background in chemistry, biochemistry, physiology, and engineering, he came to ARC in 1965, and conducted experiments in endocrinology, stress physiology, and related biochemical reactions. He soon realized that his research was leading toward performing experiments in space, but at the time no one was developing hardware or operations to support the necessary lab animals in space. Soon, he became involved in developing hardware for mission development tests and later for Spacelab 3, and eventually gave up research to support flight hardware development and flight operations.

As the project manager for Spacelab 3, he helped initiate the original U.S. biospecimen sharing program along with Rod Ballard. Spacelab 3 was mainly a hardware verification flight. According to Callahan, "In flying Spacelab 3, we wanted to take a look at the animals from the standpoint of their husbandry, well-being, and normalcy as a research animal. We sat down and selected scientists and developed a set of investigations that would give us the most information on the animals. We had some 50 or 60 investigators looking at all aspects of those rats and squirrel monkeys."

On the Spacelab Life Sciences missions, biospecimen sharing was extended to Russian and French investigators. Said Callahan, "We owed a great debt to the Russians, for U.S. participation in the Cosmos missions. We got samples at a time when the U.S. program was recovering from a major accident [the Challenger explosion], and we had no other way of getting flight specimens during that time."

Along with others at ARC, Callahan continued to promote the idea of biospecimen sharing for future flights. "These flights are less frequent than desired. They're expensive, and we shouldn't waste any opportunity to maximize utilizing materials, funding, and supplies." Since then, ARC has amassed a bank of biospecimen materials from many payloads. The goal, said Callahan, is that "if somebody wanted to look at a bone flown on SLS-1, for instance, we would have it preserved in such a manner that it would be most useful."

Biospecimens can remain in storage for a long time if kept in the proper conditions. "For unfixed, frozen specimens, we try to keep the temperature very constant, within a degree of -70 °C. Overall, freezing is the most useful method of preservation. Depending upon what you're looking at, storage has more or less of an effect. If you just wanted to look at mineral content in tissues, for instance, that's there almost regardless of what you do to the tissue. Whereas other things, certain enzymes for example, are susceptible to freezing, and just by freezing the tissue you lose data." Biospecimen preservation has allowed for the re-analysis of specimens from older flights using newer techniques not developed at the time of flight (as CAT scans and immunological assays have provided answers to questions of 20 to 30 years ago).

Since the SLS-1 mission, biospecimen sharing has continued to evolve. According to Callahan, "It has progressed to the point that plant tissues are included in biospecimen sharing; Kennedy Space Center has initiated a biospecimen sharing very similar to what we've had. And there has been a long-standing interest in biospecimens with the human side of the research. There are tissues, blood for instance, available from the astronaut crew that is potentially useful in biospecimen sharing."

Summing up, Callahan said, "We've learned there is interest in this on the part of PIs. We've had PIs propose experiments to flights that happened 10 years ago, and we've been able to supply them with tissues and results from other experiments on those same animals. It's been very valuable."

down, 10 of the rats from the RAHF, five from the AEM, and their respective ground control counterparts were sacrificed. For the bone experiments, the remaining nine RAHF flight rats, five AEM flight rats, and ground control rats were given injections of tritiated proline and calcein. Blood was also drawn from these rats for the hematology experiment. The rats were sacrificed after they had been allowed to readapt to Earth gravity for nine days postflight.

A specially trained team conducted the postflight dissections. Ames Research Center involvement in the biospecimen sharing program included oversight of the laboratory facilities used by visiting Russian investigators, receipt of flight tissue samples, and coordination of shipment of samples to Russia and France.

A Delayed Flight Profile Test (DFPT) was conducted, beginning with the receipt of rats on June 6, 1991, at Kennedy Space Center using flight RAHF and flight AEM hardware. The DFPT simulated the SLS-1 mission timeline, the flight environmental conditions, including temperature, humidity, and light/dark cycles, and significant operational events, such as hardware maintenance and rodent handling. Noise, vibration, and acceleration profiles experienced during space flight were not simulated.

Results

Hardware

Both hardware tests verified the utility and functionality of the GPWS and the SMMI. The PCDT using the GPWS and the RAHF was successful. Postflight analysis of the screens collected revealed that particulate accumulation occurred during only one condition and on one screen at less than 50 microns in size. This particulate accumulation was due to the failure of the crew to adequately clean the interior backside of the GPWS front window, which led to the entrapment of material when the window was raised. Proper cleaning prevented a repeat condition during the second particulate release. The SMMI performance exceeded expectations and produced accurate measurements during all trials.

Rodents

Compared to the ground control rats flight rats, upon landing, appeared be lethargic, to have reduced muscle tone, and to use their tails less as balancing aids. These effects were more noticeable in the rats housed in the AEMs than in those housed in the RAHF. Flight rats gained less weight during the flight period than did ground controls. There was no difference in body weight gain between rats housed in the RAHF and those housed in the AEM.

The hematology experiments showed that on the day of landing, the flight rats had fewer red and white blood cells than did ground controls, but their levels returned to normal by the ninth day postflight. Muscle studies indicated that functional and structural changes occurring in muscle tissue could impair the normal movement patterns involved in antigravity function and postural control. Housing type was found to affect some of the changes occurring in bone during space flight: singly housed animals were affected to a greater degree and showed slower recovery than group-housed animals. Research on gravity sensors indicated that rats were able to adapt to the microgravity environment better than anticipated. Results also indicated that metabolism, immune cell function, cell division, and cell attachment may be affected by microgravity.

Jellyfish

Jellyfish ephyrae that developed in microgravity were normal in most respects, although they showed hormonal changes while in space and abnormalities in swimming behavior after returning to Earth. Ephyrae that were flown after developing on Earth tended to show changes in their gravity-sensing organs. The swimming behavior of both ephyrae hatched on Earth and those that developed in microgravity showed that they had difficulty orienting themselves in space.

Additional Reading

Dalton, B.P., G. Jahns, J. Meylor, N. Hawes, T. N. Fast, and G. Zarow. *Spacelab Life Sciences-1 Final Report.* NASA TM-4706, August 1995.

NASA. STS-40 Press Kit, May 1991. Contained in NASA Space Shuttle Launches Web site. http://www.ksc.nasa.gov/shuttle/missions/missions.html.

PAYLOAD PROFILE: SLS-2/STS-58

Mission Duration: 14 days **Date:** October 18–November 1, 1993

Life Science Research Objectives

- To study the structural and functional changes occurring in the muscle, bone, blood, and balance systems of rats in response to space flight

Life Science Investigations

- Bone Physiology (SLS2-1, 2, 3, 4, 5)
- Cardiovascular Physiology (SLS2-6)
- Endocrinology (SLS2-7, 8)
- Hematology (SLS2-9, 10)
- Immunology (SLS2-11)
- Metabolism and Nutrition (SLS2-12, 13)
- Muscle Physiology (SLS2-14, 15, 16, 17, 18, 19, 20, 21)
- Neurophysiology (SLS2-22, 23, 24, 25, 26)
- Renal, Fluid, and Electrolyte Physiology (SLS2-27, 28)

Organisms Studied

- *Rattus norvegicus* (rat)

Flight Hardware

- General Purpose Work Station (GPWS)
- General Purpose Transfer Unit (GPTU)
- Refrigerator/Incubator Module (R/IM)
- Research Animal Holding Facility (RAHF)
- Small Mass Measuring Instrument (SMMI)

Spacelab Life Sciences 2/STS-58

Mission Overview

The second mission in the Spacelab Life Sciences series, STS-58, was launched on the Space Shuttle Columbia on October 18, 1993. After 14 days in orbit, one of the longest missions in U.S. manned space history to date ended on November 1, when Columbia landed at Edwards Air Force Base, California. A crew of seven flew aboard the Shuttle.

The primary mission objective was to conduct experiments within the Spacelab Life Sciences 2 (SLS-2) payload, an array of life sciences investigations using the laboratory facilities housed in the Spacelab module. The six experiments sponsored by Ames Research Center used rats as research subjects. Experience gained from the SLS-1 mission aided in the operational aspects of SLS-2. On this mission, for the first time in the history of U.S. space flight, the crew conducted blood draws and tissue dissections inflight. Conducting such procedures in space enables scientists to clearly distinguish between the effects of microgravity and the effects of landing and readaptation to Earth gravity. Rat tissues collected inflight were preserved and distributed to scientists from the U.S., Russia, France, and Japan through an extensive biospecimen sharing program.

Life Sciences Research Objectives

The goal of the SLS-2 mission was to study the structural and functional changes occurring in the bone, muscle, blood, and balance systems of rats and humans in response to space flight. The SLS-2 experiments were intended to supplement data gathered on these bodily changes from previous U.S. payloads and Soviet/Russian missions, including SL-3, Cosmos 1667, 1887, and 2044, prior to 1991, and SLS-1 in 1991. Bone experiments were designed to study the changes in calcium metabolism, bone formation, and mineralization that occur in microgravity. Muscle studies focused on microgravity-induced atrophy. Hematology experiments examined red blood cell shape and levels, blood cell mass, plasma volume, and blood cell formation. Neurophysiology studies examined the structure of gravity receptors and the physiological changes that may be involved in the etiology of space adaptation syndrome. In previous space flight experiments, scientists assessed space flight-induced physiological changes by dissecting and analyzing animal tissues several hours after the subjects were returned to Earth. Postflight dissection did not permit researchers to clearly differentiate between the effects of space flight on the organisms and the effects of readaptation to Earth gravity. Readaptation to Earth gravity occurs rapidly in some systems and tissues. The SLS-2 experiments were the first space flight experiments to assess changes occurring in tissues while organisms were still in space.

Life Sciences Payload

Organisms

The experiments used male, specific pathogen-free white albino rats (*Rattus norvegicus*) of the Sprague-Dawley strain. Flying a large contingent of rats (48) allowed investigators to gather statistically significant data on a number of parameters. Ground control groups used 106 rats. Each of the flight rats weighed approximately 300 g at launch.

Hardware

Rats were housed in individual cages in the Research Animal Holding Facility (RAHF). Natural calcium in the food bar was replaced with a non-radioactive calcium isotope (^{40}Ca). Since diet and bone are the main sources of calcium in the body, the absence of natural calcium from the diet would indicate that any natural calcium found in the animals' blood, urine, or feces had to have been resorbed from bone during flight. An Inflight Refill Unit, used to transport water to the RAHF from the Shuttle middeck galley, was flown with the RAHF.

The General Purpose Transfer Unit (GPTU) was used to transfer rat cages from the RAHFs to the General Purpose Work Station (GPWS), enabling the crew to perform inflight experiment procedures on the rodents. Weights of the rats were determined using the Small Mass Measuring Instrument (SMMI) and the Refrigerator/Incubator Module (R/IM) provided temperature-controlled storage for tissue samples.

For general descriptions of the hardware used on SLS-2, see SLS-1.

Operations

Preflight

The investigators in each science discipline group (hematology, muscle, neurophysiology, and bone) were assigned a specific number of flight animals and developed their own specific control treatments (Table 2). The SLS-2 rodent investigators had more control over their experiment

protocols than on SLS-1, which were constrained by the requirement for hardware verification tests.

Animals belonging to the hematology group underwent determination of various preflight blood parameters using radioisotope injections. A fluorescent bone marker was injected into the animals belonging to the bone group to monitor the formation of new bone during flight.

Because of a mission launch scrub, the original group of flight animals was replaced with a backup group. Flight animals were loaded into RAHF cages either one or two days before launch, depending on the experiment protocol of the discipline groups.

Inflight

During the flight, the RAHF cages had a constant temperature of 24 ± 1 °C. The lighting was cycled to provide alternating 12-hour periods of light and dark throughout the flight. Access to food and water was provided *ad libitum*.

On flight day six, five of the hematology rats received radioisotope and either hormone or placebo injections. On flight day nine, the other 10 hematology rats received the same treatments. Blood draws were taken from the hematology rats throughout the flight. On mission day 13, six of the neurophysiology/muscle flight animals were euthanized by

VARIABLES	Flight	[illegible]	[illegible]	Modified [illegible]	Basal
Number of Rats	48	43	25	12	26
Launch/ Recovery Stress	actual	none	none	none	none
Gravitational Force	micro-G	1 G	1 G	1 G	1 G
Food Available	ad lib	ad lib	ad lib	ad lib	ad lib
Housing	single (in RAHF units)	single (in SL-3 cages)	single	2 per cage	1–2 per cage
Environment	spacecraft conditions	simulated spacecraft conditions	standard lab conditions	standard lab conditions	standard lab conditions

Table 2. Flight and Control Groups for SLS-2 Rodents.

An Astronaut's Experience of the SLS Missions

Interview with Rhea Seddon

Rhea Seddon's childhood interests in space and life sciences led her to an MD and, subsequently, to become one of the first six women accepted into the astronaut corps. During her career as an astronaut, she flew on three Space Shuttle missions, including the two Spacelab Life Sciences missions, SLS-1 in 1991 and SLS-2 in 1993.

Seddon was involved with the development of SLS-1 and joined the crew as a mission specialist, helping to conduct much of the inflight science. She recalls that the care, housing, and behavior of the animals were central issues for the mission. To help assess how animals react to weightlessness, a rat was allowed to briefly float free within the General Purpose Work Station. This was the first time an animal had been allowed to do so outside of its cage.

"This helped to answer some questions about animal handling that were very important for the future of life sciences research," said Seddon. "I think if we hadn't done that we would have had to develop all kinds of procedures to deal with the possibility that the animals might be aggressive and so we would have wasted a lot of training time for SLS-2. That's certainly one of the things we like to do on each mission, to help future missions predict or prepare for what they are going to do."

For SLS-2, Seddon flew as the payload commander. A major focus of the research was the inflight animal dissection, performed for the first time in space. She explained that the dissection process was carefully planned to address issues including logistics, equipment, animal handling, and fixative use.

Performing dissections in microgravity poses unique difficulties. The dissections were performed within the General Purpose Work Station, providing a limited amount of space. To allow for multiple dissections without stopping between each to clean the area, open the door, and resupply, much equipment was placed inside the work station, further limiting space for operations. Even with all of the planning, "there were still many unanswered questions," said Seddon. "Are these tissues going to float away? Are we going to get them in the fixative in the time allowed? We had to fix the inner ear within two minutes and the muscles within ten, so we had specific time constraints."

According to Seddon, because of the extensive biospecimen sharing with foreign investigators, the dissection and biosampling became a complex procedure. "There were lots of tissues that needed to be properly dissected, and then properly fixed and properly labeled, and properly stored so we could bring back the tissues that investigators wanted."

Although challenging, the inflight dissections provided significant research benefits "Because we were able to remove the inner ears of the rats in microgravity, the scientists could look at the actual structure of the nerves." As a result, investigators were able to observe the adaptability of the nervous system, often called neuroplasticity.

Among numerous challenges to conducting experiments in space, Seddon cited the integration of large quantities of a range of science into a single mission with limited resources and the need to perform operations never before conducted in space. For payload specialists, learning to carry out experiment procedures the way the ground-based scientists would do it can be a particular challenge. For Seddon, as the payload commander for SLS-2, the ultimate challenge may well have been "blending the needs, desires, wishes, and priorities of engineers and managers from NASA, the crew from NASA, and the outside scientists."

Many astronauts fly only one Spacelab mission and never get the opportunity to draw upon the valuable experience gained in the inflight laboratory, as Seddon did in her role as payload commander on SLS-2. "One of the great things about Space Station is that people will have a chance to do more than one tour and use that experience," she said. "It would be strange for a scientist to go to the lab for a short period, come home, and not return to the lab." However, that is often the way it works in space.

	Flight	Synchronous*	Vivarium†	Basal
Hematology Group	15 rats 10 dissected at landing 5 sacrificed 9 days after landing	15 rats 10 dissected at landing 5 dissected 9 days after landing	15 rats 10 dissected at landing 5 dissected 9 days after landing	10 rats dissected at launch
Muscle Group	5 rats dissected at landing		5 rats dissected one day after landing	5 rats dissected at launch
Vestibular/Muscle Group	16 rats 6 dissected inflight on mission day (MD) 13 5 dissected at landing 5 dissected 14 days after landing	16 rats 6 dissected on MD 13 5 dissected at landing 5 dissected 14 days after landing	5 rats dissected 14 days after landing	5 rats dissected at launch
Bone Group	12 rats 6 dissected at landing 6 dissected 14 days after landing	12 rats 6 dissected at landing 6 dissected 14 days after landing	12 rats 6 dissected at landing 6 dissected 14 days after landing	6 rats dissected at launch

* Housed in SL-3 simulation cages
† Includes standard vivarium and modified colony cages

Numbers apply only to the original six flight protocols; they do not apply to postflight tissue sharing.

Table 3. Rodent Dissection Schedule.

decapitation (Table 3). Decapitation was used as the method of euthanasia because the alternative, anesthesia, results in deterioration of neural tissue. Anesthetizing the rats would have severely compromised the neurophysiology experiment. After euthanasia, blood samples were collected and tissues were dissected and fixed for postflight analysis.

Postflight

Flight and control rats were euthanized and dissected at various times postflight. Flight rats not immediately dissected postflight were used to monitor experimental parameters after readaptation to Earth gravity. Tissues dissected from euthanized rats were preserved and distributed to the investigators and scientists from Russia, France, Japan, and other foreign nations who participated in the extensive biospecimen sharing program (BSP) for SLS-2. Over 5500 BSP samples were processed and shipped following the postflight dissections.

Results

Minimal change due to short-term microgravity exposure was observed in peripheral red blood cell production and parameters, but a greater effect was seen in bone marrow progenitor cells. A decrease in overall red blood cell mass also indicated possible ineffective formation of red blood cells during space flight. These results indicate that longer exposure to microgravity may significantly affect the number of circulating red blood cells.

During space flight, rats relied on bipedal forelimb locomotion, using the hindlimbs only for grasping. Upon landing, their body posture was abnormally low and their walking was slow and stilted, indicating space flight-induced muscle weakness, fatigue, and faulty coordination.

Comparisons between inflight and postflight dissections showed that although muscle atrophy occurs in microgravity, edema and lesions seen in the muscle and interstitial tissues are artifacts of landing stress. Microgravity had the greatest effect in the soleus muscle, with a reduction in slow muscle fibers and an increase in hybrid fibers.

Front and hindlimb and jaw-bone lengths were similar between flight and control groups. The decreased mineralization rate during flight did not appear to respond rapidly to reloading. Bone response to gravitational unloading and reloading may differ at different sites in the body.

Preliminary vestibular data replicated the main findings from SLS-1.

Additional Reading

Allebban, Z., L.A. Gibson, R.D. Lange, T.L. Jago, K.M. Strickland, D.L. Johnson, and A.T. Ichiki. Effects of Spaceflight on Rat Erythroid Parameters. *Journal of Applied Physiology*, vol. 81(1), July 1996, pp. 117–122.

Buckey, Jay C. Overview and Reflections on a Successful SLS-2 Mission. *ASGSB Newsletter*, vol. 10(2), Spring 1994, pp. 11–13.

Caiozzo, V.J., K.M. Baldwin, F. Haddad, M.J. Baker, R.E. Herrick, and N. Prietto. Microgravity-Induced Transformations of Myosin Isoforms and Contractile Properties of Skeletal Muscle. *Journal of Applied Physiology*, vol. 81(1), July 1996, pp. 123–132.

Kitajima, I., I. Semba, T. Noikura, K. Kawano, Y. Iwashita, I. Takasaki, I. Maruyama, H. Arikawa, K. Inoue, N. Shinohara, S. Nagaoka, and Y.

Ohira. Vertebral Growth Disturbance in Rapidly Growing Rats during 14 Days of Spaceflight. *Journal of Applied Physiology*, vol. 81(1), July 1996, pp. 156–163.

NASA. STS-58 Press Kit, September 1993. Contained in NASA Space Shuttle Launches Web site. http://www.ksc.nasa.gov/shuttle/missions/missions.html.

Physiological and Anatomical Rodent Experiment (PARE) Payloads

The Physiological and Anatomical Rodent Experiment (PARE) payloads were designed to study physiological and anatomical changes that occur in rodents as a result of microgravity. The experiments in the program were sponsored by Ames Research Center (ARC).

The experiment objectives in the three PARE payloads flown during the 1991–1995 period were to further investigate the effects of microgravity on muscle and bone tissue. Researchers hoped to learn more about the bone loss and muscle atrophy that result from both space flight and aging to develop strategies for counteracting the adverse effects.

The Animal Enclosure Module (AEM), a self-contained life support system, was used to house rodents for each payload. Use of existing, flight-proven hardware helped to minimize the cost of the PARE series.

Three missions carrying PARE payloads were flown during the 1991-1995 period: STS-48, in 1991; and STS-54 and STS-56, in 1993.

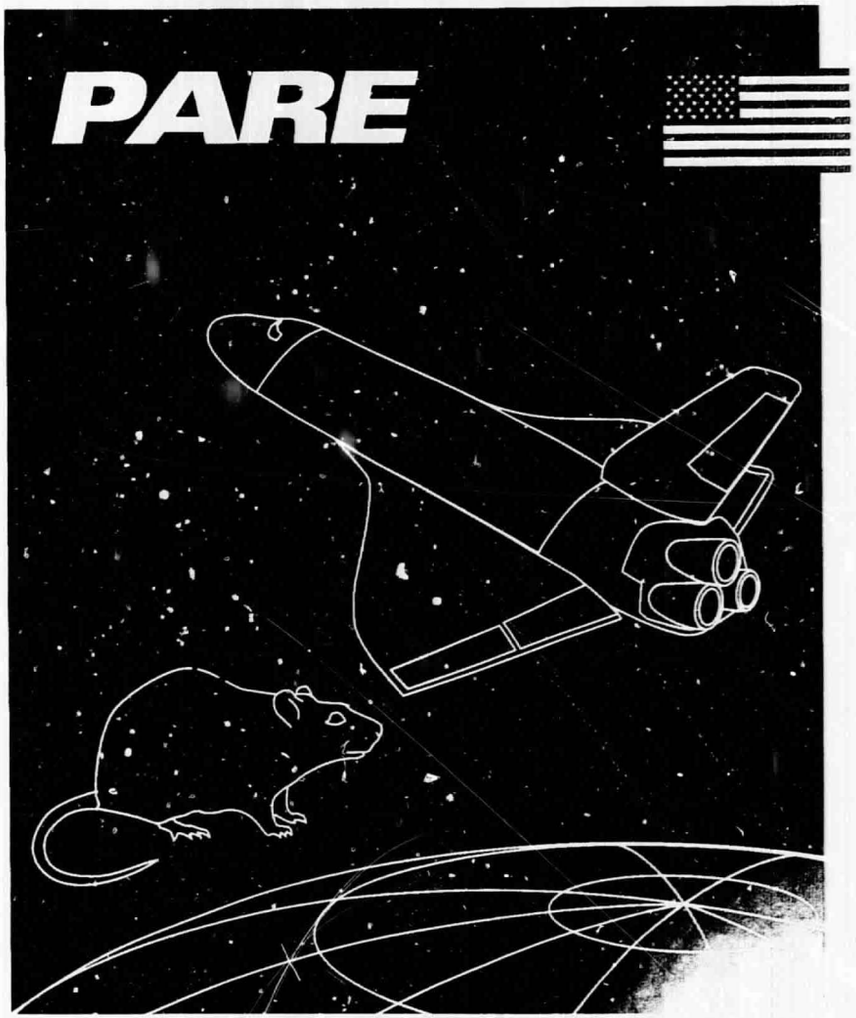

PAYLOAD PROFILE: PARE.01/STS-48

Mission Duration: 5 days **Date:** September 12–18, 1991

Life Science Research Objectives
- To study the muscle atrophy that occurs in microgravity
- To compare the effects on skeletal muscle of a simulated microgravity condition on Earth to the effects caused by microgravity

Life Science Investigations
- Muscle Physiology (PARE1-1)

Organisms Studied
- *Rattus norvegicus* (rat)

Flight Hardware
- Ambient Temperature Recorder (ATR-4)
- Animal Enclosure Module (AEM)
- AEM Water Refill Box

Physiological and Anatomical Rodent Experiment 1/STS-48

Mission Overview

The STS-48 mission was launched on the Space Shuttle Discovery on September 12, 1991, and was terminated on September 18 with the landing at Edwards Air Force Base, California. Five crew members flew aboard the Shuttle.

The primary objective of the STS-48 mission was to deploy the NASA Upper Atmosphere Research Satellite. A secondary objective was to fly the first in the series of Physiological and Anatomical Rodent Experiment payloads (PARE.01) sponsored by Ames Research Center.

Life Sciences Research Objectives

The objectives of the PARE.01 payload were to study muscle atrophy, glucose transport, and metabolism in microgravity, and to determine if a ground-based, tail-suspension model effectively reproduces microgravity conditions for the purpose of studying space flight-induced muscle atrophy. In the tail-suspension model, rats are maintained in cages in such a way that their hindlimbs no longer bear the weight of their bodies.

Life Sciences Payload

Organisms

Juvenile female albino rats (*Rattus norvegicus*) were the subjects of the experiment. Eight rats were used in the flight group, while 24 rats

were used in four ground control groups. Juvenile rats allowed scientists to investigate the effects of space flight on growing muscle. At launch, each rat was 31 days old and weighed between 60 and 65 g.

Hardware

Rats were housed in an Animal Enclosure Module (AEM). The AEM is a self-contained rodent habitat, storable in a Shuttle middeck locker, that provides ventilation, lighting, food, and water. For PARE.01, the AEM accommodated eight juvenile rats. Fans inside the AEM circulate air through the cage and passively control the temperature. A filtering system controls waste products and odors. Although the AEM does not allow handling of animals inside, a clear plastic window on the top of the unit permits viewing or video recording. The Water Refill Box enables inflight replenishment of water.

An Ambient Temperature Recorder (ATR-4) accompanied the AEM. The ATR-4 is a self-contained, battery-powered package that can record up to four channels of temperature data.

Operations

Preflight

Eighteen rats were delivered to the launch site 10 days before launch. The eight selected for the flight experiment were loaded into the Shuttle approximately 19 hours before launch.

Inflight

Of the rats remaining at the launch site, five were euthanized and used as basal controls for determining baseline levels of muscle weight and protein content, while three others were kept in vivarium cages for the duration of the mission, for health observation (Table 4).

Lighting inside the AEM was programmed to an alternating cycle of 12 hours light, 12 hours dark. The crew verified that the hardware was functioning effectively during each flight day. They also observed the rats daily through the transparent window of the AEM. On the third day of the mission, they reported a noticeable odor emanating from the AEM. Visibility through the transparent window became progressively worse during the mission due to animal debris deposited on the inside surface of the window. By the end of the mission, the crew found it difficult to see individual animals.

Postflight

Within two hours after the Shuttle landed at Edwards Air Force Base, the rats were removed from the AEM and weighed. After a health evaluation, the animals were euthanized and tissue samples were prepared and stored for analysis.

Two ground control studies were conducted postflight: an asynchronous control study and a tail-suspension control study. The purpose of the asynchronous ground control experiment was to subject a group of rats to the same conditions experienced by the flight rats, except for launch, microgravity, and landing. The test subjects were eight female rats similar in age and weight to those flown on the Shuttle. They were loaded into an AEM identical to the flight unit. The AEM was placed in a room in the investigator's laboratory with a controlled light/dark cycle for a period of time equal to the duration of the mission. The temperature in the room was matched as closely as possible with the temperatures recorded by the ATR-4 during the flight. At the end of the test, the

VARIABLES	Flight	Basal	Vivarium Control	Postflight Tail Suspension	Postflight Asynchronous Control
Number of Rats	8	5	3	8	8
Launch/ Recovery Stress	actual	none	none	none	none
Gravitational Force	micro-G	1 G	1 G	simulated micro-G	1 G
Food Available	ad lib	ad lib	ad lib	ad lib	ad lib
Housing	group (8 per cage)	group (5 per cage)	group (3 per cage)	single	group (8 per cage)
Environment	spacecraft conditions	standard lab conditions	standard lab conditions	standard lab conditions	simulated spacecraft conditions

Table 4. Flight and Control Groups for PARE.01 Rodents.

animals were euthanized and tissue samples were prepared, as in the case of the flight subjects.

The tail-suspension control study used eight rats. Its purpose was to determine whether microgravity and tail suspension have similar effects on muscle. The rats were housed in vivarium cages for the duration of the five-day test. The tail of each rat was attached with a casting material to a guy wire assembly that ran across the top of the cage, lifting the rat's hindquarters off the cage floor. The rats were allowed to move freely around the cage using their forelimbs.

Results

Although rats in all groups consumed food at a similar rate, flight animals gained more weight than did control animals. In both flight animals and tail-suspended controls, weight-bearing muscles showed atrophy and reduced growth, whereas non-weight-bearing muscles grew normally. Compared to non-tail-suspended ground control rats, flight and tail-suspended rats showed an increased sensitivity to insulin. Overall, the results indicate that the tail-suspension model reliably mimics the effects of microgravity on weight-bearing muscles.

The odor from the AEM was found to be the result of an improperly assembled filter. The problem was rectified in a postflight study.

Additional Reading

NASA. STS-48 Press Kit, September 1991. Contained in NASA Space Shuttle Launches Web site. http://www.ksc.nasa.gov/shuttle/missions/missions.html.

Tischler, M.E., E.J. Henriksen, K.A. Munoz, C.S. Stump, C.R. Woodman, and C.R. Kirby. Spaceflight on STS-48 and Earth-Based Unweighting Produce Similar Effects on Skeletal Muscle of Young Rats. *Journal of Applied Physiology*, vol. 74, 1993, pp. 2161–2165.

PAYLOAD PROFILE: PARE.02/STS-54

Mission Duration: 6 days **Date:** January 13–19, 1993

Life Science Research Objectives

- To study effect of microgravity on the size, strength, and stamina of rat skeletal muscle

Life Science Investigations

- Bone Physiology (PARE2-1)
- Endocrinology (PARE2-2)
- Immunology (PARE2-3)
- Muscle Physiology (PARE2-4, 5)
- Neurophysiology (PARE2-6)

Organisms Studied

- *Rattus norvegicus* (rat)

Flight Hardware

- Ambient Temperature Recorder (ATR-4)
- Animal Enclosure Module (AEM)
- AEM Water Refill Box

Physiological and Anatomical Rodent Experiment 2/STS-54

Mission Overview

The six-day STS-54 mission was launched on the Space Shuttle Endeavour on January 13, 1993. It ended on January 19 with the landing of the Shuttle and its five-member crew.

The primary mission objective was to deploy the fifth of NASA's Tracking and Data Relay Satellites, which form a space-based network providing communications, tracking, telemetry, data acquisition, and command services for NASA spacecraft.

A number of secondary objectives were also accomplished during the mission. One of these was the flight of the third CHROMEX payload (CHROMEX-03), sponsored by Kennedy Space Center. The second in the series of Physiological and Anatomical Rodent Experiment payloads (PARE.02), sponsored by Ames Research Center, was also flown on the mission.

Life Sciences Research Objectives

The objective of the PARE.02 payload was to determine the extent to which short-term exposure to microgravity alters the size, strength, and stamina of skeletal muscles normally used to help support the body against the force of gravity. Previous experiments have shown that muscle mass is lost during space flight. In space, muscles that usually hold the body up against the force of gravity experience disuse. Without the loading force supplied by gravity, which forces muscle to perform mechanical work, these muscles rapidly atrophy. This loss of muscle

mass can hinder the capability of astronauts to function normally upon return to Earth. Similar muscle atrophy is seen on Earth during normal aging, as individuals become less active. Data gathered from the PARE.02 experiment were expected to help scientists study muscle performance and the atrophy process, with a view to find ways of preventing atrophy during space flight and aging.

Life Sciences Payload

Organisms

Male albino rats (*Rattus norvegicus*) belonging to the Sprague-Dawley strain acted as subjects for the flight experiment. Six rats were used in the flight group, while an additional six were used in each of two ground control groups. Each rat weighed approximately 250 g at the time of launch.

Hardware

The flight rats were housed in an Animal Enclosure Module (AEM). An Ambient Temperature Recorder (ATR-4) accompanied the AEM. For general descriptions of the AEM and ATR-4, see PARE.01.

Operations

Preflight

Prior to flight, the animals were conditioned to a temperature environment similar to that expected within the Shuttle middeck during the mission. The animals in the flight group were loaded into AEMs and placed in the Shuttle middeck 16 hours before launch.

Inflight

There were two groups of ground control rats: a 24-hour delayed synchronous ground control, consisting of six rats housed in an AEM; and a vivarium control, consisting of six rats housed in standard laboratory conditions (Table 5).

During the flight, the rats had unlimited access to food and water. Lighting inside the AEM was programmed to an alternating cycle of 12 hours light, 12 hours dark. Each day, the crew observed the animals and recorded their health status. They also verified that the animals' life support equipment was functioning adequately.

VARIABLES	Flight	Ground Control	Vivarium Control
Number of Rats	6	6	6
Launch/ Recovery Stress	actual	none	none
G-Force	micro-G	1 G	1 G
Food Available	ad lib	ad lib	ad lib
Housing	group (6 per cage)	group (6 per cage)	group (3 per cage)
Environment	spacecraft conditions	simulated spacecraft conditions	standard lab conditions

Table 5. Flight and Control Groups for PARE.02 Rodents.

Postflight

Shortly after landing, the animals were removed from the Shuttle. Muscle function was measured in the flight rats on the first postflight day and in the control rats one day later. After functional testing, the rats were euthanized, and muscles were removed for biochemical and histological analyses.

Results

A reduction in maximal isometric tension and an increase in maximum shortening velocity was observed in the soleus muscle of flight rats. It was speculated that to compensate for decreased isometric tension, maximum shortening velocity increases so the muscle can be stimulated at higher frequencies. From analysis of gene expression, it appeared that muscle atrophy in microgravity is isoform specific. Altered gene expression in osteoblasts, altered enzymatic activity in the diaphragm, and changes in some immunological and neurological chemical systems due to space flight were also observed.

Additional Reading

NASA. STS-54 Press Kit, January 1993. Contained in NASA Space Shuttle Launches Web site. http://www.ksc.nasa.gov/shuttle/missions/missions.html.

PAYLOAD PROFILE: PARE.03/STS-56

Mission Duration: 9 days **Date:** April 8–17, 1993

Life Science Research Objectives

- To study the effects of microgravity on bone and to compare these to the effects of microgravity conditions simulated on Earth

Life Science Investigations

- Muscle Physiology (PARE3-1, 2)

Organisms Studied

- *Rattus norvegicus* (rat)

Flight Hardware

- Ambient Temperature Recorder (ATR-4)
- Animal Enclosure Module (AEM)
- AEM Water Refill Box

Physiological and Anatomical Rodent Experiment 3/STS-56

Mission Overview

The STS-56 mission was launched on the Space Shuttle Discovery on April 8, 1993. After remaining in orbit for nine days, Discovery landed on April 17. Five crew members flew aboard the Shuttle.

The primary mission payload was ATLAS-2, a laboratory for collecting data about the Earth's atmosphere. Several secondary payloads were also carried onboard, one of which was a middeck payload sponsored by Ames Research Center. It was the third in the series of Physiological and Anatomical Rodent Experiment payloads (PARE.03).

Life Sciences Research Objectives

The two experiments in the PARE.03 payload were designed to study changes that occur in rapidly growing bone after exposure to microgravity. Comparison was then to be made with changes resulting from exposure to a simulated microgravity condition on Earth to determine if experiments studying space flight-induced musculoskeletal changes can be conducted on Earth. As in PARE.01, microgravity was simulated by tail suspension, in which rats are maintained in cages in such a way that their hindlimbs no longer bear the weight of their bodies. An understanding of the changes in bone structure and function may be useful in preventing bone loss in astronauts in long-duration space missions. Previous studies have indicated that bone cells mature and mineralize slower in microgravity than on Earth. In PARE.03, studies examined the responses of younger animals with more rapidly growing

bones. Scientists also attempted to determine whether the bone changes are reversed shortly after return to Earth.

Life Sciences Payload

Organisms

Male albino rats (*Rattus norvegicus*) of the Sprague-Dawley strain served as subjects for the experiments. The flight group consisted of 16 rats, while ground control groups consisted of 48 rats. Each was approximately six weeks old and weighed about 150 g at launch.

Hardware

The flight rats were housed in Animal Enclosure Modules (AEMs). An Ambient Temperature Recorder (ATR-4) accompanied each AEM. For general descriptions of the AEM and ATR-4, see PARE.01.

Operations

Preflight

All rats received an injection of calcein green, a chemical bone marker, one week prior to flight, and an injection of demeclocyclin, a second bone marker, immediately before launch. Flight rats were loaded into AEMs and placed in the Shuttle about 20 hours before launch.

Inflight

Three ground control groups each contained 16 rats (Table 6). One group, the 24-hour delayed control, was kept in two AEMs installed in the Orbiter Environmental Simulator (OES). The OES is a modified environmental chamber at Kennedy Space Center whose temperature, humidity, and CO_2 level are electronically controlled based on downlinked environmental data from the orbiter. Thus the animals/plants within the chamber are exposed to environmental conditions that are similar to those experienced by the flight group during the mission. Another group served as tail-suspension controls. These animals were maintained in cages with their hindlimbs raised off the ground to simulate exposure to microgravity. A third group of control rats served as a vivarium control and were housed in standard vivarium cages.

During the flight, the rats had free access to food and water. The light cycle was maintained at 12 hours of light alternating with 12 hours of darkness. The crew observed the rats daily to ensure that they were in good health and verified that the hardware was functioning normally.

Postflight

One hour before the Shuttle landed, six rats from each of the three ground control groups were given injections of a chemical for measuring the rate of DNA synthesis. They were euthanized 30 minutes later and their tissues were stored for analysis. The remaining rats in each control group were given injections of calcein green.

The flight rats were recovered from the Shuttle about three hours after landing. After their health was assessed by a veterinarian, six of the rats were injected with the chemical for measuring DNA synthesis and euthanized 30 minutes later. The remaining 10 flight rats received injections of calcein green.

Five rats from each of the flight and three control groups were injected with the DNA label 36 hours after the Shuttle landed and euthanized 30 minutes later. The five rats remaining in each group were

VARIABLES	Flight				
Number of Rats	16	16	16	16	6
Launch/ Recovery Stress	actual	none	none	none	none
Gravitational Force	micro-G	1 G	simulated micro-G	1 G	1 G
Food Available	ad lib	ad lib	ad lib	ad lib	ad lib
Housing	group (8 per cage)	group (8 per cage)	single	group (8 per cage)	group (6 per cage)
Environment	spacecraft conditions	simulated spacecraft conditions	standard lab conditions	standard lab conditions	standard lab conditions

Table 6. Flight and Control Groups for PARE.03 Rodents.

injected with the DNA label 72 hours after Shuttle landing and euthanized 30 minutes later. Tissues removed from the euthanized animals were subsequently processed by the investigators.

Results

In both space flight and hindlimb-suspension groups, a decrease in the differentiation of bone-forming cells and a reduction in mRNA related to bone growth was observed. These levels rapidly returned to control levels upon return to Earth.

Additional Reading

NASA. STS-56 Press Kit, March 1993. Contained in NASA Space Shuttle Launches Web site. http://www.ksc.nasa.gov/shuttle/missions/missions.html.

Page intentionally left blank

International Microgravity Laboratory (IML) Payloads

The International Microgravity Laboratory (IML) program was sponsored by NASA's Office of Space Science and Applications and directed by the Flight Systems Division at NASA Headquarters. The program was a collaborative effort involving NASA and several international partners. International cooperation in planning and implementing the program allowed each partner's costs to be kept to a minimum. Teams of investigators were formed with the goal of sharing resources equally between NASA and its international partners. NASA provided mission management, payload integration, Spacelab facilities, and Shuttle transportation services for the program. Space agencies of other participating countries provided hardware for the Spacelab. The hardware units were available for use by American scientists as well as scientists from the countries that developed them. For life sciences research on IML missions, the European Space Agency provided a life support system called the Biorack. The German space agency contributed a gravitational biology facility called the Nizemi. The Japanese space agency provided the Aquatic Animal Experiment Unit for conducting research in aquatic animal embryology, cell biology, bioprocessing, and radiation biology. All participants of the program shared the results of the scientific investigations.

The objectives of the IML program were to conduct a variety of experiments in the life and microgravity sciences. Microgravity sciences encompass a broad range of studies including understanding fundamental physics involved in materials behavior to using those effects to

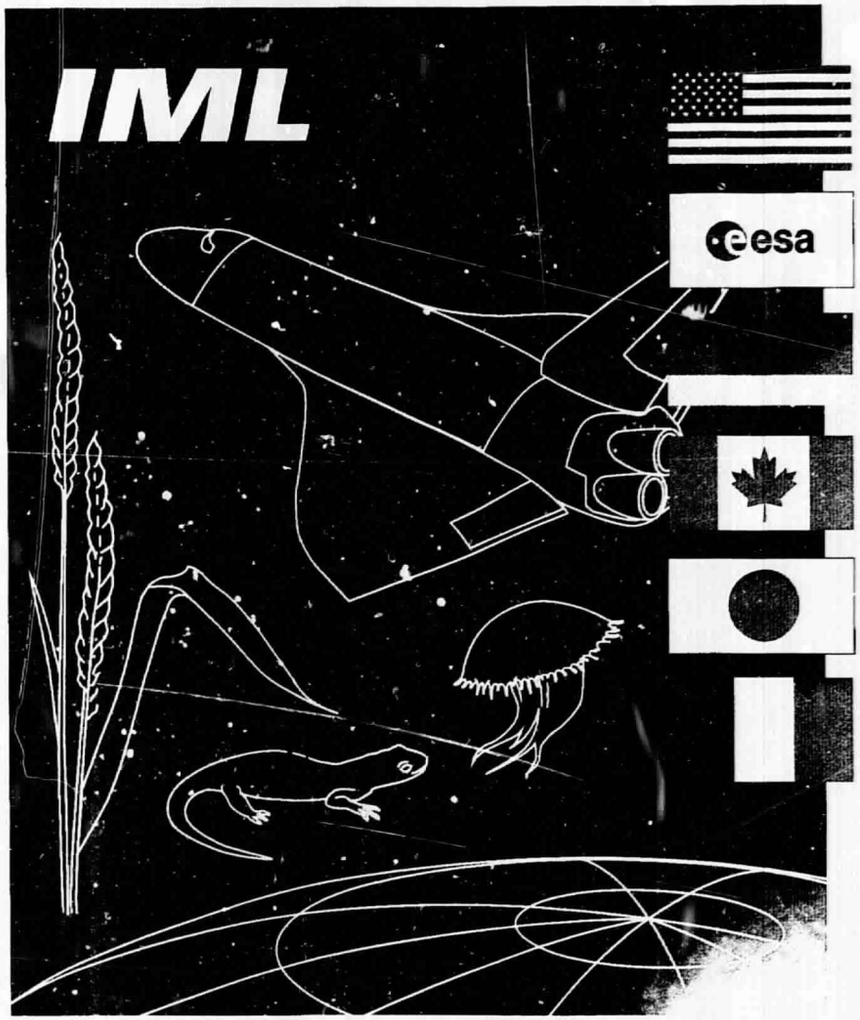

generate materials that cannot be made in Earth's gravitational environment. Experiments in the two areas of research complement each other well on space missions because they tend to pose different demands on limited mission resources. Experiments in the microgravity sciences often require a great deal of spacecraft power but usually require minimal crew time. On the other hand, experiments in the life sciences make few demands on the spacecraft power but are often conducted by or on crew members. Research in both areas was expected to contribute to the development of the International Space Station and future international space programs.

Payload specialists participated in the IML missions, as they did in the Spacelab Life Sciences missions. Their presence benefited the experiments within the program in several ways. As experienced researchers, they could perform experiment procedures and minimize the risk of error. In the event of hardware malfunctions, they could repair or modify equipment. They could take advantage of unanticipated opportunities for additional data collection whenever possible.

The Spacelab module was flown in its long configuration on the IML missions. The long module contains four double racks and four single racks for scientific investigations. Each double rack in the module accommodates 1280 pounds of equipment, while each single rack accommodates 640 pounds. For IML users, one double rack was permanently outfitted with video equipment, a fluid pump, and other support hardware. The permanent equipment allowed researchers to reduce experiment costs.

The IML program was designed to place payloads on space flight missions at approximately 24-month intervals, so that scientists could build on their expanding knowledge from mission to mission. Two missions with IML payloads were flown during the 1991–1995 period: STS-42, in 1992; and STS-65, in 1994.

PAYLOAD PROFILE: IML-1/STS-42

Mission Duration: 8 days **Date:** January 22–30, 1992

Life Science Research Objectives

- To study cat plant sensitivity to altered gravitational fields
- To study wheat plant response to light in a microgravity environment
- To study bone formation in microgravity at the cellular level
- To study the exposure of nematodes and yeast cells to cosmic radiation

Life Science Investigations

- Bone Physiology (IML1-1)
- Cell and Molecular Biology (IML1-2)
- Plant Biology (IML1-3, 4)
- Radiation Biology (IML1-5)

Organisms Studied

- *Avena sativa* L. (oat) seedlings
- *Triticum aestivum* cv. Broom (wheat) seedlings
- *Caenorhabditis elegans* (nematode) larvae
- *Saccharomyces cerevisiae* (yeast)
- *Mus musculus* (mouse) cells

Flight Hardware

- Ambient Temperature Recorder (ATR-4)
- Biorack US1 Experiment Hardware
- Biorack US2 Experiment Hardware
- Biorack US3 Experiment Hardware
- Biorack US3 Syringe Racks
- Gravitational Plant Physiology Facility (GPPF)
- GPPF: Middeck Ambient Stowage Insert (MASI)
- GPPF: Plant Carry-On Container (PCOC)

International Microgravity Laboratory 1/ STS-42

Mission Overview

The STS-42 mission carried the first International Microgravity Laboratory payload (IML-1) on the Space Shuttle Discovery on January 22, 1992. The shuttle remained in orbit for eight days, landing at Edwards Air Force Base, California, on January 30. STS-42 carried a crew of seven members, including payload specialists from Canada and Germany.

Several microgravity and life sciences experiments were carried out on the mission. Scientists from NASA, the European Space Agency, Canada, France, and Japan were involved in the research conducted onboard. Five of the experiments within the IML-1 payload were sponsored by Ames Research Center. Two of these, assigned the acronyms GTHRES and FOTRAN, were conducted using plants as experimental subjects. The other three, named RADIAT, YEAST, and CELLS, studied nematode worms, yeast, and mouse cells, respectively.

Life Sciences Research Objectives

The Ames Research Center life sciences experiments were designed to study the growth patterns of plants and to assess the effects of radiation and microgravity on living organisms and cell cultures. Although all plants on Earth are known to have similar growth patterns, their gravity-sensing and light-response mechanisms are not adequately understood. The Gravitational Threshold (GTHRES) experiment studied plant sensitivity to altered gravitational fields both in microgravity and in clinostat-induced weightlessness on Earth.

The Phototropic Transients (FOTRAN) experiment investigated plant responses to light in a microgravity environment. The objectives of the RADIAT and YEAST experiments were to determine the genetic and developmental effects of high-energy ionized-particle radiation on living systems. These experiments were important because, although the high-energy particle radiation of space has been physically characterized, few attempts have been made to correlate it with biological responses.

The CELLS experiment was designed to allow scientists to study the way that embryonic cells cultured in microgravity produce cartilage. Experiments on previous space flights have shown that cartilage formation is impaired in space-flown rodents.

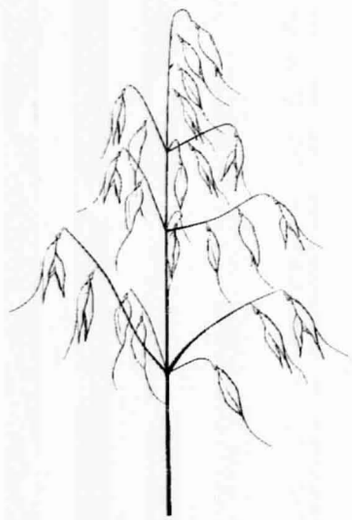

Oat (*Avena sativa* L.)

Life Sciences Payload

Organisms

Oat seeds (*Avena sativa* L.) were used in the GTHRES experiment because oat has been used in more studies of gravitropism than any other plant and because oat seedlings develop rapidly. A total of 396 seeds were flown, though not all germinated in flight.

Mouse (*Mus musculus*)

The FOTRAN experiment was conducted on 144 wheat seeds (*Triticum aestivum* cv. Broom). Some seeds were planted preflight and some inflight, so that three-day-old seedlings would be available for study throughout the flight.

More than seven million microscopic free-living soil nematodes (*Caenorhabditis elegans*) from several genetically defined strains acted as subjects in the RADIAT experiment. Nematodes have a generation time, a period from birth to reproduction, of about three days. Each individual worm produces 280 offspring through self-fertilization. They are ideal for genetic studies because the ancestry of every cell in their bodies is known from the time of fertilization. The majority of the nematodes flown on the Shuttle were maintained at a dormant larval stage known as dauer larva. Dauer larvae do not feed and require minimal lev-

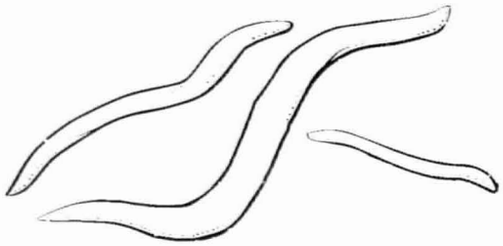

Nematode (*Caenorhabditis elegans*)

els of oxygen and care. Other nematodes were launched as young larvae and were allowed to develop for up to two generations during the flight.

The YEAST experiment used common brewer's yeast (*Saccharomyces cerevisiae*), allowing researchers to study both mitotic and meiotic cell divisions. Both normal and radiation-sensitive varieties were flown, totaling about three billion cells. The small size of the yeast chromosomes permitted investigators to make sensitive measurements, which could be extrapolated to higher organisms, including humans.

Approximately 32 million cultured cartilage cells from embryonic mouse (*Mus musculus*) limbs were the experimental material used in the CELLS study.

Hardware

Plants were transported into the Shuttle in the Plant Carry-On Container (PCOC). The container accommodates 36 of the plant holding compartments called Plant Cubes as well as soil trays for inflight plantings. A Middeck Ambient Stowage Insert (MASI), which holds additional trays for inflight plantings, was also flown.

Once inside the spacecraft, the two plant experiments were housed in the Gravitational Plant Physiology Facility (GPPF), a facility used to investigate how plants respond to gravity (gravitropism) and light (phototropism). Seeds are placed in plant growth containers called Plant Cubes. Each cube contains one tray with small wells in which seedlings are planted. For the GTHRES experiment, each tray contained nine wells, whereas for the FOTRAN experiment, each tray contained six wells. Each cube has a window, which is penetrable by infrared radiation, but not visible light. A second optional window allows blue light to enter the cubes when placed in the Recording and Stimulus Chamber (REST). The cubes used in the FOTRAN experiment had a plush lining material where the cube interfaces with the REST and attachments to facilitate side loading to the Test Rotor. The cubes also have a septum for gas sampling.

The Culture Rotor consists of two centrifuges that provide a force of 1 G to specimens placed inside. Plant Cubes are placed on these rotors prior to transfer to the Mesocotyl Suppression Box (MSB), the Test Rotors, or the REST. The Test Rotors are centrifuges that rotate at various speeds to provide controlled centripetal forces ranging from 0 to 1 G. A camera located outside the Test Rotors allows video recording of plant bending. Each Culture Rotor and Test Rotor centrifuge can accommodate 16 Plant Cubes. The REST allows infrared recording of seedlings within four Plant Cubes before and after exposure to blue light. The MSB, which can be used only with oat seedlings, exposes seedlings to red light for up to 10 minutes, thereby forcing them to grow straight by suppressing the plant mesocotyls. The mesocotyl is a stem-like part of the seedling that forms if a seed is buried deep in the ground, which as it grows, carries the shoot meristem up through the soil. The mesocotyl continues to grow until the plant is exposed to light. The MSB allows just enough light to suppress the mesocotyls but not enough to interfere with gravity responses. The suppression of the mesocotyl allows investigators to study only the effect on the growth of the coleoptile, the hollow sheath enclosing and protecting grass leaves

during germination. Two video recorders record images from the REST and Test Rotor cameras.

The hardware for the RADIAT, YEAST, and CELLS experiments was contained in the European Space Agency's Biorack facility (Fig. 5). The Biorack is a reusable, modular, multiuser laboratory facility for performing biological experiments on subjects such as plants, tissues, cells, bacteria, and insects. The Biorack contains a cooler/freezer and two incubators that can operate at different temperature levels. On IML-1 Biorack flew an additional incubator. The facility also features a glovebox that allows manipulation of experiment specimens or handling of toxic materials, such as chemical fixatives, without contaminating the cabin environment of the Shuttle. Experiments designed to fly in Biorack are contained in sealed, anodized aluminum containers. Type I containers hold a volume of approximately 65 ml, while Type II containers hold a volume of approximately 385 ml.

The RADIAT hardware included two different assemblies. Inside Type I containers were capped Lexan tubes filled with nematodes and media. The containers also held sheets of a radiation-sensitive thermoplastic that registered ionized-particle impacts. A radiation cartridge belt made of Nomex fabric consisting of pockets lined with foam contained five Type I containers with specimens and one Ambient Temperature Recorder (ATR-4), a self-contained, battery-powered package that can record up to four channels of data. The belt, with Velcro tabs to secure the experiment packages, was attached to the Spacelab tunnel to absorb radiation.

Inside Type II containers were layered stacks of nematodes in media packaged together with sheets of radiation-sensitive thermoplastic and thermoluminescent detectors. The YEAST hardware was housed in Type I containers. Each container held four double well cell culture chambers containing solid agar medium and yeast. The containers also carried syringes filled with appropriate fixative.

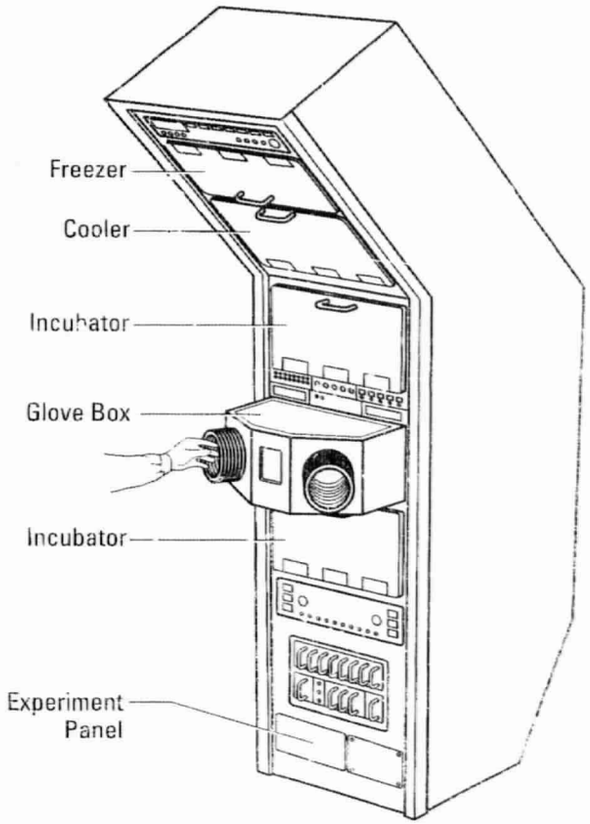

Figure 5. The ESA Biorack is a multi-purpose laboratory facility for conducting biological studies.

The Growth of KSC's Life Sciences Program
Interview with Howard Levine

Howard Levine joined NASA's Life Sciences support contract in 1993 and is now a senior scientist at Kennedy Space Center (KSC). He has been involved with over 20 space flight experiments, beginning with CHROMEX-01, the first science payload managed entirely by KSC.

When asked to look back on the growth of KSC's young space life sciences program, Levine said, "The biggest change over the years has been in the improvement in the hardware that's available to the investigator. When we started with CHROMEX-01, we had the Plant Growth Unit (PGU), which wasn't bad, but gave you a very low level of light, below the minimum that any investigator would want to use for any kind of photosynthetic experiment." Since then, hardware has been developed that provides plants with up to 10 times more light. Also, said Levine, "There's better control of the ambient temperature and carbon dioxide concentration. The PGU didn't have any cooling capabilities. That was always a problem in the early experiments."

The Biological Research in Canisters (BRIC) hardware has also evolved. Said Levine, "Our Flight Hardware Development group took these very basic cylinders and enhanced their capabilities to provide temperature and humidity monitoring, light for phototropism studies, and crew-activated inflight fixation. They also developed a sealed version that can be flushed preflight with an investigator-specified gas mixture, providing another level of experimental control."

His job as a Project Science Coordinator provided Levine with an extra set of challenges, besides working to expand hardware capabilities. "Part of the challenge," said Levine, "has been helping investigators maintain sterility during their space flight experiments. Often you have an investigator from a state that has relatively low humidity and not much of a fungal problem. They'll have methods that work in their home lab, but then they come to Florida in the middle of summer when we have 100 percent humidity, and they have to take stricter precautions."

Not only do the investigators have to deal with a different set of environmental conditions, but they have to adapt to working with the small, closed systems typical of space flight hardware. Including himself in an observation, he said, "All Ph.D.s are somewhat greedy in terms of the amount of data we want from our experiments. So we tend to see how many organisms we can fit into our system on Earth and cram it as full as possible. In space, you cannot rely upon convection as an oxygen replenishing mechanism, forcing you to often rely strictly upon diffusion, which is a much slower process. So if you have a chamber that can support 40 organisms on Earth, you may not be able to support that many in space due to reduced gas exchange. It's often a challenge to get the investigators to back off on the number of experimental organisms per chamber."

Another related challenge is determining optimal environmental parameters for any given experiment. "With a lot of experiments you'll have a set of environmental conditions that you determine on Earth at 1 G to be optimal. Then you fly your experiment and do a ground control with that experimental regime and compare the two. However, what was experimentally determined to be optimal on Earth is not necessarily optimal under microgravity conditions due to differences in the way liquids and gases behave in space. So a bias has been introduced into the experiment. You're not really looking at a direct microgravity difference; you're looking at a difference in the optimal environmental parameters required to support the growth of the experimental organisms, i.e., an indirect microgravity effect."

Currently, Levine is the principal investigator for the second Microgravity Plant Nutrient Experiment. His research group is attempting to define the optimal moisture levels for plant roots in space and different ways of providing water and nutrients to plants. This knowledge will be put to use on the International Space Station. Knowing what environmental factors are optimal for microgravity will allow other investigators to maximize the efficiency of their experiments in the future.

For the CELLS experiment, Type I containers housed a single tray holding four polycarbonate chambers, each divided into two liquid-tight compartments by a gas-permeable membrane. The chambers allowed injection of media and fixative. Additional Type I containers carried empty syringes for medium removal and syringes filled with fixative or replacement medium. Syringe racks were used to store syringes. The racks, made of Lexan polycarbonate, are designed in three configurations: a Cooler Rack, a Stowage Rack, and a Freezer Rack, each stored in a different location and intended to hold syringes filled with different media.

Operations

Preflight

Seedlings for the GTHRES and FOTRAN experiments were cultured in plant cubes. To ensure that plants of appropriate heights and ages would be available for the experiment, some seeds were planted preflight. For the GTHRES flight experiment, 180 oat seedlings were planted in 20 Plant Cubes. These oat seeds began germinating on the ground. For the FOTRAN flight experiment, 96 wheat seeds were planted in 16 cubes. Cubes with planted seedlings and soil trays for inflight plantings were both loaded into the Plant Carry-On Container.

The RADIAT experiment required approximately 80 thousand worms to be placed in lexan tubes in Type I containers. Inside the tubes, dormant populations of dauer larvae were incubated in a suspension medium. Growing populations were placed in tubes seeded with a thin layer of agarose and *E. Coli* bacteria. Assembly of the RADIAT Type II containers began two days before launch. Worms were placed into a layer of nitrocellulose filter at approximately 10,000 worms per square centimeter. Each worm layer was assembled with particle detectors and support layers, creating a sandwich. A total of 28 sandwiches were then loaded into two Type II containers beginning approximately 20 hours before launch. The Radiation Cartridge Belt was placed in the less-shielded tunnel of the Shuttle, where the nematodes received the same radiation dosage as the crew.

Radiation-sensitive mutant yeast cultures for the YEAST experiment were placed in four containers, the normal yeast cultures were placed in four containers, and all eight were stowed at 5 °C in the middeck of the Shuttle before launch.

For the CELLS experiment, cell cultures were prepared and placed in a total of 20 Type I containers. Ten containers were used for flight experiments, and the remaining were used in ground experiments. Approximately 20 hours before launch, flight cell cultures were turned over to ESA and loaded into a 5 °C Passive Thermal Conditioning Unit to maintain the cultures in a fixed temperature until launch.

Inflight

Ground control experiments to complement the GTHRES and FOTRAN flight experiments included a synchronous ground control conducted in a GPPF and a clinorotation experiment, which provided the GTHRES and FOTRAN specimens with a simulated microgravity environment. Inflight controls with no light stimuli were also performed in the FOTRAN experiment.

At various times during the flight, the crew planted 216 oat and 48 wheat seeds in plant cubes. Plant cubes containing oat seedlings for the GTHRES experiment were either placed on one of the Earth-gravity simulating centrifuges or in the microgravity environment until they were

ready to be used in the experiment. At prescheduled times during the mission, Plant Cubes were transferred to the variable-gravity centrifuges for exposure to different combinations of gravitational forces. G-values ranged from 0.1 to 1 G and times ranged from 2 to 130 minutes.

Once the Shuttle achieved orbit and the Spacelab was activated, some of the GTHRES plant cubes were transferred to the two culture rotors, where they continued to develop under simulated Earth-gravity conditions. At preset times, plant cubes were moved in groups of four to the MSB, where they were exposed to 10-minute periods of red light. The cubes were then returned to the culture rotors. When the plants were 82 hours old, the plant cubes were moved to a test rotor and exposed to predetermined acceleration forces and durations. Plant growth was recorded using infrared photography while in the test rotor. Other parameters recorded were ethylene gas concentrations, temperature, and centrifuge speed.

Plant cubes for the FOTRAN experiment were placed in culture rotors at the time of Spacelab activation. When the seedlings were 75 hours old, they were transferred, in groups, to the REST, where they were exposed to a pulse of blue light to evoke a phototropic response. Growth responses were recorded by infrared time-lapse photography. Gas concentrations were sampled as they were in the GTHRES experiment.

Some of the plant groups used in GTHRES and FOTRAN were preserved in a fixative during flight, while others were returned live to Earth.

A ground control experiment, which used identical specimens and hardware, complemented the RADIAT, YEAST, and CELLS flight experiments housed in the Biorack. The two-hour delay between the flight experiment and the ground control experiment allowed all flight experiment procedures and environmental conditions, such as humidity levels, temperature, and gas concentrations, to be duplicated exactly in the ground control experiment. The flight control experiment, conducted in a 1-G centrifuge, allowed investigators to distinguish between the effects on specimens caused by microgravity and those caused by the other environmental conditions of space flight.

The RADIAT experiment required the crew to place containers in various predetermined temperature environments within the Shuttle.

For the YEAST experiment, the crew transferred the eight containers of the normal and mutant yeast cells from the middeck to incubators at the time of Spacelab activation. Two containers of each cell type were placed in a 36 °C incubator and two of each type were placed in a 22 °C incubator. Within each incubator, one container of each yeast type was placed on a centrifuge that provided a gravitational force of 1 G to the specimens, while one container of each yeast type was kept in microgravity.

Over four periods, fixative was added to half of the cell cultures from each of the four culture conditions: 22 °C/1 G; 22 °C/0 G; 36 °C/1 G; and 36 °C/0 G. The preserved cultures were then placed in a 4 °C cooler. The remaining live cultures were maintained undisturbed for the duration of the mission.

For the CELLS experiment, cell cultures were kept in a 37 °C incubator. Five containers flew on a 1-G centrifuge, while the other five containers were kept in microgravity. Crew members used the glovebox to remove growth media from a 0-G and a 1-G chamber. They froze the removed media for later biochemical analysis. They then filled the chambers with new culture medium, added fixative to the chambers to preserve the cells, and transferred the chambers to the 4 °C cooler. These procedures were conducted shortly after Biorack activation, which occurred about five hours after launch, and every 24 hours thereafter.

Postflight

After the Shuttle landed, and the experiment packages were recovered, gas samples, plant samples, and photographic data from the FOTRAN and GTHRES experiments were analyzed. Plastic detectors used for the RADIAT experiment were chemically processed to record where particles had penetrated the worms. Genetic mutations and developmental abnormalities were also assessed in the worms. For the CELLS experiment, the amount and quality of cartilage development were assessed and the characteristics of the cartilage tissue were noted.

Results

Acceleration measurements taken from the Shuttle showed that significant disturbances occurred periodically during the mission. The experiments themselves appeared to have been a significant source of disturbance. The refrigerator/freezer used onboard appeared to have contributed considerably to the vibration that occurred during the mission.

Oat Study

The GTHRES experiment found that a simulated gravitational force was not a requirement for autotropism, the return of a bent plant to its upright position, to occur in space. However, autotropism did not occur in oat coleoptiles during the simulated microgravity conditions of clinoration on Earth, or was observed at a feeble level. The threshold stimulus for gravitational response in microgravity was found to be very low—about 15 or 20 G-seconds. Circumnutation, the bending or turning of a growing stem tip that occurs as a result of unequal rates of growth along the stem, of the oat coleoptiles was not observed either in space microgravity or during clinoration. Oat seedlings on IML-1 exhibited "precocious development syndrome" (PDS), in which shoots emerged over half a day earlier than control seedlings on Earth. However, this syndrome occurred while the seedlings were growing on the 1-G centrifuge, not while exposed to microgravity. The GTHRES experiment also demonstrated that clinorotation does not always produce the same effects as microgravity.

Wheat Study

Autotropism and PDS were also observed in the wheat plants of the FOTRAN experiment. The PDS appeared to be progressive: the seedlings that spent a higher percentage of the period before emergence in space developed faster. Germination was earliest in seedlings that were planted during space flight, which therefore completed all of their early development in space. There was a reduction in the proportion of seedlings that exhibited circumnutation at 0 G, but circumnutational activity was still present in almost half of the flight seedlings. As in the GTHRES experiment, the clinostat did not provide a reliable simulation of true microgravity effects.

Nematodes Study

The RADIAT experiment demonstrated that generation of mutations was 10 times greater during space flight than on Earth, though no irregularities of reproduction and development were evident in the worms.

Mouse Cells Study

Significant detachment of cell layers occurred in all groups. Transmission electron microscopy showed that within flight cell cultures, cells did undergo a shape change from flattened to rounded that

is associated with chondrogenesis, but the associated production of matrix did not occur.

Yeast Study

The YEAST experiment indicated that no marked enhancement or reduction of cell yield occurred under microgravity conditions. The temperature of incubation appeared to be the principal factor affecting the total cell yield of the cultures; cell densities of cultures incubated at 22 °C were greater by a factor of two or less than the densities of those incubated at 36 °C.

Additional Reading

European Space Agency. *BIORACK on Spacelab IML-1*, European Space Agency SP-1162. Noordwijk, The Netherlands: ESA Publications Division, 1995.

Duke, P. J. Altered Chondrocyte Differentiation in Response to Altered G-level. In: *1992–1993 Space Biology Accomplishments*, edited by Thora W. Halstead. NASA TM-4711, October 1994, pp. 222–224.

Miller, T.Y., ed. *First International Microgravity Laboratory Experiment Descriptions*. NASA TM-4353, February 1992.

PAYLOAD PROFILE: IML-2/STS-65

Mission Duration: 15 days **Date:** July 8–23, 1994

Life Science Research Objectives

- To study the early development of gravity-sensing organs in newts
- To study the development and gravity-related behavior of jellyfish in space
- To study the critical stages of plant embryogenesis in microgravity

Life Science Investigations

- Developmental Biology (IML2-1)
- Neurophysiology (IML2-2)
- Plant Biology (IML2-3)

Organisms Studied

- *Cynopus pyrrhogaster* (newt) adults and larvae
- *Aurelia aurita* (jellyfish) polyps and ephyrae
- *Hemerocallis* cv. Autumn Blaze (daylily) cells

Flight Hardware

- Ambient Temperature Recorder (ATR-4)
- Aquatic Animal Experiment Unit (AAEU)
- Life Science Cell Culture Kit (CCK) (supplied by NASDA)
- Plant Fixation Chamber (PFC) (supplied by NASDA)
- Refrigerator/Incubator Module (R/IM)

International Microgravity Laboratory 2/ STS-65

Mission Overview

The second in the series of International Microgravity Laboratory payloads (IML-2) was launched on the Space Shuttle Columbia's STS-65 mission on July 8, 1994. After remaining in orbit around the Earth for 15 days, the Shuttle landed on July 23. The seven-member crew included a Japanese astronaut, who was the first Japanese woman in space.

Besides NASA, the European Space Agency (ESA) and the space agencies of Japan (NASDA), Canada (CSA), Germany (DLR), and France (CNES) sponsored experiments on the mission. Investigators from a total of 13 countries participated in research into the behavior of materials and life in microgravity.

The IML-2 payload consisted of more than 80 experiments in microgravity and life sciences, including five life science experiments developed by American researchers. Of these, Ames Research Center sponsored two experiments using newts and jellyfish. Kennedy Space Center (KSC) sponsored the PEMBSIS experiment, designed to study plant embryogenesis in microgravity.

Life Sciences Research Objectives

The objective of the newt experiment was to study the early development of gravity-sensing organs (Fig. 6). The utricle and saccule are specialized organs present in the inner ears of all vertebrate animals. They contain otoliths (or otoconia), calcium carbonate stones, which are deposited on a gelatinous membrane that lies over the sensory hair

cells. The pull that gravity exerts on the otoliths is sensed by the hair cells, and information about the gravitational stimulus is transmitted to the brain via connecting nerve fibers. The experiment was designed to determine whether otolith production and development of otolith-associated receptor cells and nerve fibers may be altered in the microgravity environment of space.

The jellyfish experiment was designed to study behavior and development in space. Behavioral parameters studied included swimming, pulsing, and orientation. Study of developmental processes focused on gravity-sensing organs. The experiment also sought to determine the level of artificial gravity stimulus needed to counteract any negative effects of space flight.

The objective of the plant embryogenesis (PEMBSIS) experiment was to evaluate whether space flight affected the pattern and developmental progression of embryonic daylilies from one well-defined stage to another. It also examined whether cell division (mitosis) and chromosome behavior were modified by the space environment.

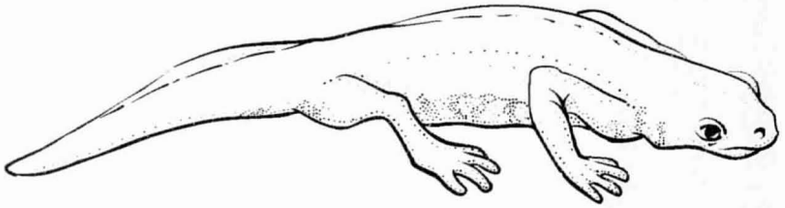

Japanese Red-Bellied Newt (*Cynopus pyrrhogaster*)

Life Sciences Payload

Organisms

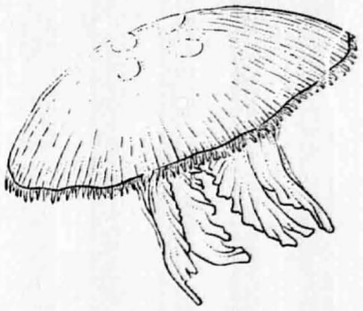

Jellyfish (*Aurelia aurita*)

Adults and larvae of the Japanese red-bellied newt species (*Cynopus pyrrhogaster*) were used in the newt experiment. This species was selected for study partly because the vestibular system of very young newts undergoes most of its development in a period of time equivalent to the planned mission duration. Furthermore, adult females can be induced to lay eggs by injecting them with a hormone. Their eggs develop in orbit and mature in the microgravity environment to provide scientists with a sample of embryos that have undergone early development in microgravity.

Moon jellyfish (*Aurelia aurita*) served as experiment subjects for the jellyfish experiment. Both the sedentary polyp stage and the free-swimming ephyra stage of the jellyfish were studied.

The PEMBSIS experiment studied embryogenically competent daylily (*Hemerocallis* cv. Autumn Blaze) cells.

Hardware

Newt adults and larvae were housed in cassette-type water tanks in the Aquarium Package within the Aquatic Animal Experiment Unit (AAEU), developed by NASDA, the Japanese space agency. The AAEU is a life support unit that can keep fish or other aquatic animals alive for at least 19 days in the Spacelab. It consists of a Main Unit, an Aquarium

Package, and a Fish Package, each of which has an independent life support system. In IML-2, each cassette held an egg container with individual egg holes (6-mm diameter, approximately 12 mm deep).

A slow rotating centrifuge microscope and camera system, Nizemi, developed by DLR (formerly DARA), the German space agency, was used to examine and videotape the behavior of the jellyfish ephyrae and polyps at up to 15 varying levels of G and at a temperature of 28 °C (to facilitate swimming activity). The Nizemi provides observation of samples under variable acceleration levels between 10^{-3} and 1.5 G and a controllable temperature between 18 and 37 °C.

Jellyfish were housed in the European Space Agency's Biorack facility within Biorack Type I containers. For descriptions of the facility and containers, see IML-1.

A Refrigerator/Incubator Module (R/IM) held fixed jellyfish specimens. The R/IM is a temperature-controlled holding unit flown in the Shuttle middeck that maintains a cooled or heated environment. It is divided into two holding cavities and can contain up to six shelves accommodating experiment hardware. An Ambient Temperature Recorder (ATR-4) was placed inside the R/IM. For a general description of the ATR-4, see IML-1.

The PEMBSIS experiment used hardware provided by the National Space Development Agency (NASDA) of Japan. As part of the NASDA Life Science Cell Culture Kit, this experiment used six petri-dish-like Plant Fixation Chambers (PFCs). The PFCs were used to hold the cultured plant cells for the PEMBSIS experiment. These containers are completely sealed. The PFCs allow plant cells exposed to space flight to be fixed in orbit by insertion of a chemical fixative via syringe through a septum port.

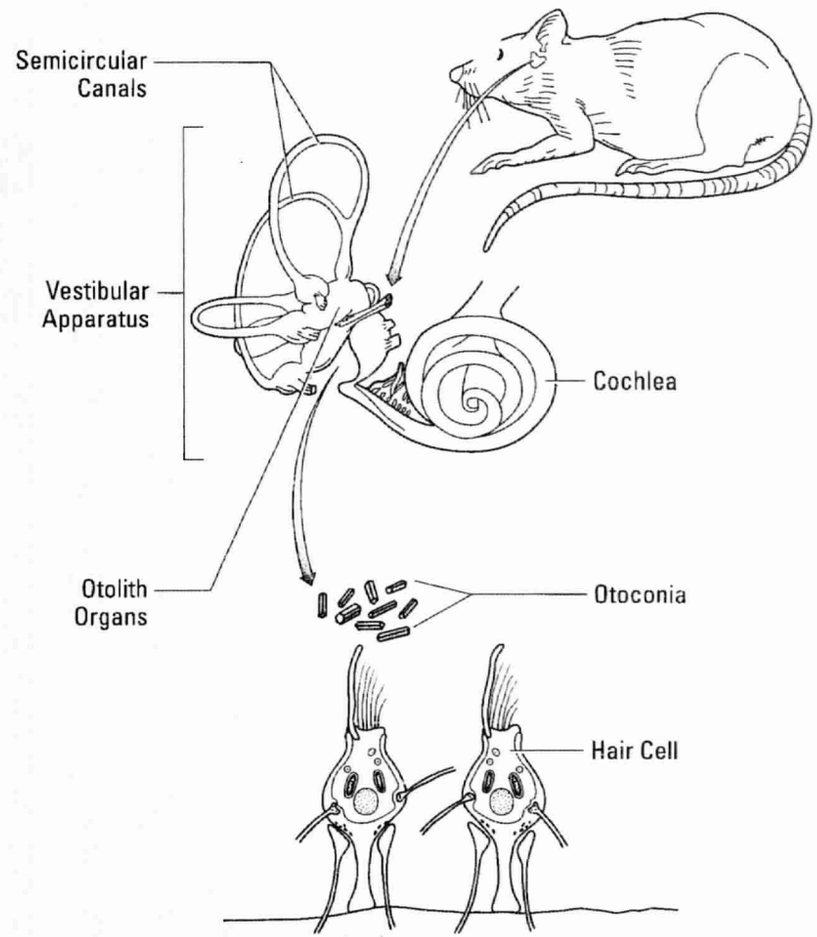

Figure 6. Together, the semicircular canals and the otolith organs make up the vestibular apparatus of the inner ear, which provides information to the brain about balance and motion in 3-D space. The gravity-dependent otolith organs, lined with hair cell receptors and otoconia, detect linear acceleration of the head. When the head moves, the otoconia lag behind, bending the hair cell receptors and changing the directional signal to the brain.

Operations

Preflight

PEMBSIS cell cultures were prepared about a week before launch. Twelve chambers were filled with a semi-solid medium. Six were transported to KSC and kept in an unlit incubator at 22±2 °C until they were loaded into the Shuttle. The other six were used as ground controls.

Approximately 36 hours before launch, 148 prefertilized newt eggs were loaded into the three cassettes of the AAEU. Four adult newts were also loaded into the cassettes; two cassettes each contained one newt apiece, while a third contained two. Fresh, aerated water at 24 °C circulated continuously through the unit. A similar unit was maintained at KSC as a ground-control.

Twenty-four hours before launch, four groups of six jellyfish polyps each were given iodine in artificial sea water (ASW) to induce strobilization of polyps into the ephyrae form.

Shortly before flight, the jellyfish samples were loaded into a total of 10 Nizemi cuvettes containing ASW and placed in Type I containers. For the behavior study, a group of normal ephyrae and a group of ephyrae without statoliths were placed in the Biorack 22 °C incubator. The third group of ephyrae was placed in the Biorack 1-G centrifuge. Two groups of polyps were used for the development study. One group was placed in the incubator and the other was placed in the 1-G centrifuge. A similar set of equipment was maintained at the KSC ground-control facility.

Inflight

On flight days 6, 8, and 11, the crew carried out video observations of newt eggs to document the rate of development. The crew also made observations of the adult newts at specified times. On both the fifth and ninth days of flight, an adult newt was found dead, causing the loss of some eggs because of contamination. The remaining two adult newts survived the flight and were recovered live upon landing.

One cuvette from each group of jellyfish ephyrae and polyps were videotaped on the rotating microscope/centrifuge at intervals throughout the mission to determine the G-threshold for the swimming behavior of the ephyrae. On flight day five, both the flight and ground-control groups of ephyrae with statoliths that had been hatched on Earth were fixed. On flight day 13, two of the four groups of polyps that had been strobilation-induced were fixed. The remaining ephyrae and polyps were returned to Earth for postflight analysis.

To provide a comparison between flight-fixed and ground-fixed groups in the PEMBSIS experiment, the crew fixed some cultures shortly before landing. The fixative was a three-percent glutaraldehyde (balance water) solution. Each chamber was fixed with a 20-ml injection of fixative.

Postflight

The flight cassettes containing the newts were retrieved approximately six hours after landing. Some of the larvae were fixed and preserved for later analysis, while some were tested to estimate how space flight affected the gain of the otolith-ocular reflex and measure the otolith volumes and areas of associated sensory epithelia.

Living jellyfish were counted, coded, and photographed beginning at five hours postflight. The pulse rate, numbers of arms, rhopalia, and statoliths were counted in each of the ephyrae. Those with abnormal pulsing were videotaped after landing and again approximately 24 hours later. Some of both the flight and control jellyfish were allowed

to form clones, which were then examined for arm number and other structural differences.

After the PEMBSIS cell culture chambers were recovered from the Shuttle, specimens of living cells and somatic embryos were photographed, counted, and chemically fixed within nine hours of landing, before their first division cycle on Earth was complete. Chromosomes were measured and compared within and among cultures.

Results

Newt Study

According to morphogical analysis, both flight and ground controls developed at the same rates. Analysis of three-dimensional reconstructions showed that flight-reared larvae had a larger mean endolymphatic sac (ES) and duct volume and a larger average volume of otoconia within the sac when compared to similarly staged ground controls. Furthermore, the appearance of otoconia in the ES was greatly accelerated in the larvae reared in microgravity.

Jellyfish Study

Ephyrae that developed in microgravity had significantly more abnormal arm numbers as compared with 1-G flight and ground controls. As compared to controls, significantly fewer ephyrae that developed in space swam when tested postflight. Polyps budding in space produced more buds and were developmentally ahead of ground controls. Although development through budding and through metamorphosis proceeded well in space, some jellyfish are apparently more sensitive to microgravity than others, as evidenced by their abnormal arm development.

Daylily Cell Study

Cytological changes and chromosomal aberrations were seen in both flight-fixed and ground-fixed flight cells. A substantial number of binucleate cells, cells possessing two nuclei, were also found in the flight samples. The ground-control samples were all uninucleate.

Additional Reading

NASA. STS-65 Press Kit, July 1994. Contained in NASA Space Shuttle Launches Web site. http://www.ksc.nasa.gov/shuttle/missions/missions.html.

Snyder, R.S., comp. *Second International Microgravity Laboratory (IML-2) Final Report*. NASA RP-1405, July 1997.

Wiederhold, M.L., W.Y. Gao, J.L. Harrison, and R. Hejl. Development of Gravity-Sensing Organs in Altered Gravity. *Gravitational and Space Biology Bulletin*, vol. 10(2), June 1997, pp. 91–96.

Wiederhold, M.L., H.A. Pedrozo, J.L. Harrison, R. Hejl, and W. Gao. Development of Gravity-Sensing Organs in Altered Gravity Conditions: Opposite Conclusions from an Amphibian and a Molluscan Preparation. *Journal of Gravitational Physiology*, vol. 4(2), July 1997, pp. P51–P54.

Pituitary Hormone Cell Function (PHCF) Payload

The Pituitary Hormone Cell Function (PHCF) payload was designed to provide an opportunity to research rat pituitary cell behavior in microgravity. The experiment was sponsored by Ames Research Center.

The objective of the PHCF payload was to examine the effect of microgravity on growth hormone produced by cells in the pituitary gland. This hormone is crucial in promoting growth and maintaining the proper condition of a variety of tissue types throughout the body. A preliminary cell-culture experiment performed on the STS-8 mission in 1983 showed that rat pituitary cells released less hormone during space flight than on the ground. This observation was partially confirmed by experiments performed on the Spacelab 3 mission in 1985 and the Cosmos 1887 mission in 1987.

PHCF was a small payload, requiring minimal crew attention, located in the Shuttle middeck. It constituted a one-time payload, which flew in 1992 on the STS-46 mission.

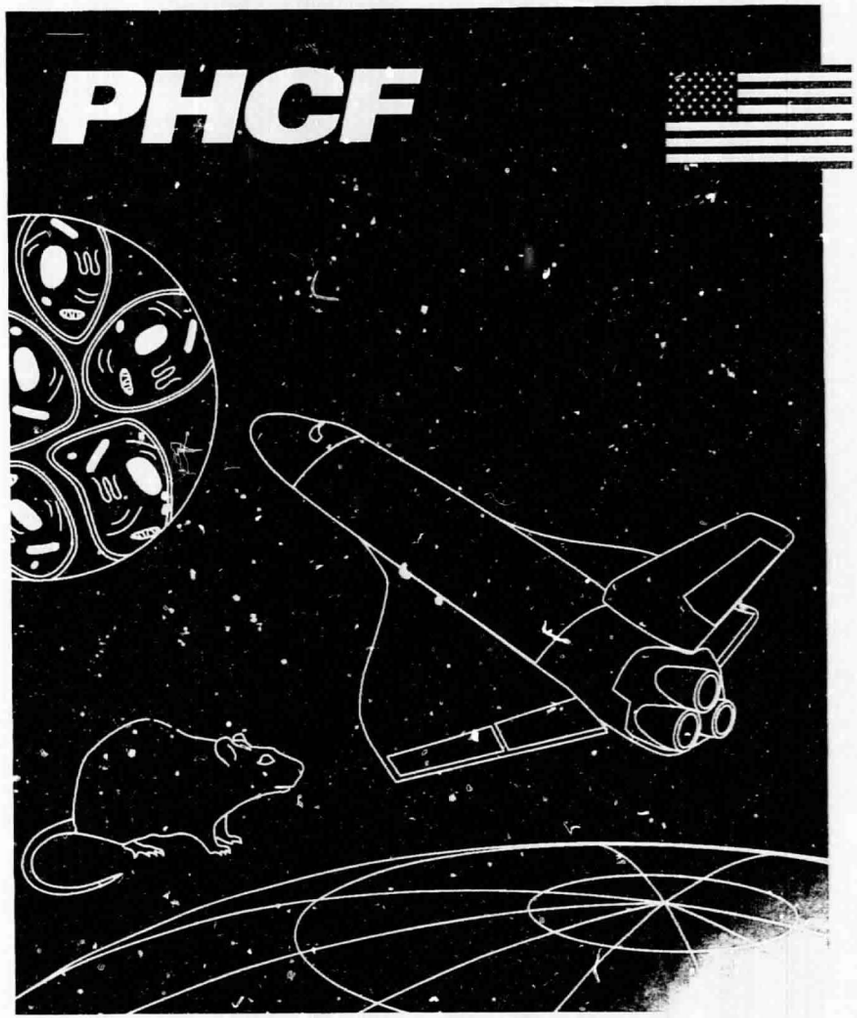

PAYLOAD PROFILE: PHCF/STS-46

Mission Duration: 8 days **Date:** July 31–August 8, 1992

Life Science Research Objectives

- To determine the effects of microgravity on hormone-producing rat pituitary cells

Life Science Investigations

- Endocrinology (PHCF-1)

Organisms Studied

- *Rattus norvegicus* (rat) pituitary cells

Flight Hardware

- Altered Kit Container (AKC)
- Ambient Temperature Recorder (ATR-4)
- Refrigerator/Incubator Module (R/IM)

Pituitary Hormone Cell Function/STS-46

Mission Overview

The eight-day STS-46 mission was launched on the Space Shuttle Atlantis on July 31, 1992. After the mission was extended one day to complete scientific objectives, the Shuttle landed on August 8. The seven-member crew included an astronaut from the European Space Agency (ESA) and the first astronaut from the Italian space agency (ASI).

The primary mission objectives were to deploy the Tethered Satellite System, jointly sponsored by NASA and ASI, and to deploy the ESA's EURECA platform. One of its secondary objectives was to fly the Pituitary Hormone Cell Function (PHCF) payload sponsored by Ames Research Center.

Life Sciences Research Objectives

The PHCF experiment was designed to determine if microgravity affects the capacity of cultured rat pituitary cells to produce biologically or immunologically active growth hormone (Fig. 7). Different cells within the anterior pituitary gland of the brain produce different hormones. Growth hormone is secreted from cells called somatotrophs and affects numerous body tissues, including the liver, muscle, fat, and hematopoietic tissue. It plays an important role in muscle metabolism, and alterations in its secretion may contribute to microgravity-associated muscle atrophy. Research into growth hormone production and secretion in microgravity may help scientists understand the mechanisms behind muscle atrophy and operative mechanisms in degenerative muscle diseases on Earth.

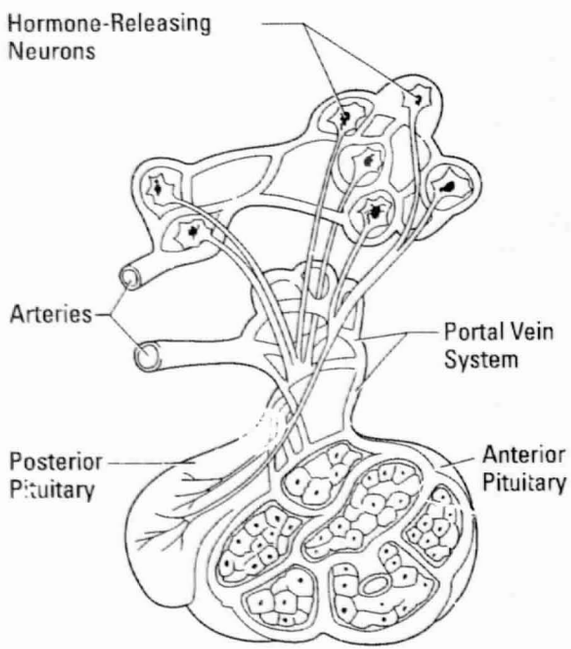

Figure 7. The pituitary gland, influenced largely by hormones produced in the hypothalamus, also produces hormones that affect other parts of the endocrine system. The posterior lobe stores and releases hormones made by the hypothalamus. The anterior lobe produces its own hormones, including growth hormone (GH), but is regulated by the neurosecretory cells of the hypothalamus.

The objectives of the PHCF experiment were to determine the effect of microgravity on the synthesis, storage, secretion, and molecular form of growth hormone by rat pituitary cells and whether any alterations in pituitary hormone secretion remain *in vitro* after return to Earth. The experiment also sought to determine how microgravity affects somatotrophs in dorsal versus ventral areas of the pituitary gland.

Life Sciences Payload

Organisms

The experiment used cultured cells from male albino rats (*Rattus norvegicus*) of the Sprague-Dawley strain. At the time of preflight euthanization for collection of cells, rats were approximately six weeks old and weighed between 200 and 300 g.

Hardware

Cell cultures were held in vials placed in an Altered Kit Container (AKC), a commercial kit container, altered for use with the PHCF experiment. Heat-transfer plates were added to the left side of the box to allow efficient heat transfer to and from the Refrigerator/Incubator Module (R/IM). The R/IM is a temperature-controlled holding unit flown in the Shuttle middeck that maintains a cooled or heated environment.

The inside of the AKC consists of two halves, each with six slots. Eleven of the slots each contain one vial rack containing 15 vials. The remaining slot accommodates an Ambient Temperature Recorder (ATR-4), a self-contained, battery-powered package that can record up to four channels of temperature data.

To enable the crew to monitor the incubation temperature and verify R/IM functioning, an adhesive-backed liquid crystal thermometer, called a Temperature Strip, was applied to the AKC. The AKC was then placed in the R/IM.

Operations

Preflight

During the preflight period, rats were kept in groups of four in vivarium cages maintained at 18 to 26 °C. They had free access to food and water. Their light cycle was set to 12 hours of light alternating with 12 hours of darkness, adjusted so that euthanasia would occur at around three hours after lights-on.

Twenty-six hours before launch, pituitary glands were collected from the brains of 100 euthanized rats. Five different types of cell cultures were prepared from the pituitaries. Of the 100 pituitary glands, 85 were homogenized. The homogenized tissue was used in three experimental groups of cultures. The first was composed of a mixture of cells capable of producing many different hormones. The remainder of the homogenized tissue was separated into high-density cells, which formed the second group, and low-density cells, which formed the third. The 15 remaining pituitary glands were separated into dorsal and ventral gland sections before being homogenized. The homogenized dorsal and ventral sections formed the fourth and fifth types of cultures.

Once prepared, the pituitary cell cultures were placed in 495 glass culture vials. The vials were incubated at 37 °C. Of these vials, 165 were selected for the flight group. Vials were wrapped with clear tape, as a precautionary measure against breakage, and loaded into vial racks. Eleven vial racks were used, each holding 15 vials. The 11 racks were loaded into the R/IM and maintained at 20 °C until launch. The R/IM was mounted in a middeck locker in the orbiter at about 20 hours prior to launch.

Of the remaining vials, two groups of 165 each were set aside and maintained at 20 °C to serve as ground control groups: a basal control and a two-hour delayed synchronous control. The delayed synchronous was later placed in a 37 °C incubator.

Inflight

Immediately after launch the basal ground control group was processed and frozen for transport to the investigator's laboratory. The delayed synchronous group was maintained in the incubator for the duration of the flight and processed in a manner similar to the flight vials.

On each flight day, at approximately the same time, the crew removed the AKC from the R/IM and manipulated it to allow mixing of the culture medium in the vials.

Postflight

After the Shuttle landed, the R/IM was removed from the orbiter. The culture vials were removed from the AKC and placed in an insulated case for transport to the investigator's laboratory, where they were analyzed for growth hormone content. Ground control cultures were analyzed in a similar manner.

Results

The analyses showed that rat pituitary cells are sensitive to microgravity and that the changes seen in these cells are similar to those observed *in vivo* in pituitary growth hormone cells of rats flown in space. Changes observed in the cells related to the amount and biological activity of growth hormone released from the cells, the structure and intracellular hormone content of the somatotrophs, and the responsiveness of the cells to hydrocortisone and growth hormone in the culture medium. The results of the mission also indicated that the responses of the flight

cells could be modified experimentally by addition of hydrocortisone to the culture medium. These results may prove to be useful in developing measures for countering the effects of long-term space flight in humans. In addition, there was evidence that pituitary cell levels of prolactin, a hormone involved in reproduction and immune system modulation, were altered in microgravity.

Temperature recordings retrieved postflight from the Shuttle revealed that the cell cultures onboard had been exposed to temperatures ranging from 38.4 to 38.8 °C. Ground control cell cultures, on the other hand, had been exposed to temperatures of 37.7 to 37.6 °C. This discrepancy was resolved by conducting an eight-day ground control experiment with two groups of cell cultures kept at 37 °C and 39 °C six months after the flight. A statistical comparison of the two sets of data from this ground experiment demonstrated that the changes seen in the cells during the flight experiment could not be explained by the temperature differential.

Additional Reading

Hymer, W.C., R.E. Grindeland, and T. Salada. Experimental Modification of Rat Pituitary Growth Hormone Cell Function during and after Spaceflight. *Journal of Applied Physiology*, vol. 80(3), March 1996, pp. 955–970.

Hymer, W.C., T. Salada, and L. Avery. Experimental Modification of Rat Pituitary Prolactin Cell Function during and after Spaceflight. *Journal of Applied Physiology*, vol. 80(3), March 1996, pp. 971–980.

NASA. STS-46 Press Kit, July 1992. Contained in NASA Space Shuttle Launches Web site. http://www.ksc.nasa.gov/shuttle/missions/missions.html.

Page intentionally left blank

Spacelab-J (SL-J) Payload

Spacelab-J (SL-J) was the first major cooperative program between NASA and the Japanese space agency, NASDA. The concept of a collaborative Spacelab mission between the two countries was first proposed in 1979, even before the first Space Shuttle flight. An announcement of opportunity was made to the Japanese scientific community in August 1979. Out of 103 original proposals received, 62 were selected for further ground-based studies. In 1984, NASDA selected the final 34 life and materials sciences experiments that would fly on Spacelab-J. Selection of a Japanese payload specialist to provide assistance with the NASDA experiments occurred in parallel with the experiment selection process. Out of 533 applicants, three were chosen: Dr. Mamoru Mohri, who became the first NASDA astronaut, and two alternate candidates.

The agreement between NASA and NASDA stipulated that NASDA would select and develop the Japanese portion of the payload to be flown in the Spacelab, while NASA would provide launch services and mission management, the cost of which would be reimbursed by NASDA. NASDA was responsible for having specialists on hand to provide science and engineering support to the Shuttle during the mission. NASA's responsibilities included integrating the experiments and hardware that composed the payload, installing the payload in the Spacelab, and ensuring that all systems functioned properly. NASA was also responsible for designing, managing, and overseeing the mission, training the crew, and supporting postflight activities. After NASDA had selected its complement of experiments, there were still available racks in the Spacelab for American experiments. Nine NASA experiments

were selected from proposals received in response to solicitations and Announcements of Opportunity. American and Japanese scientists participating in SL-J formed a working group, which met periodically before the mission to plan and coordinate scientific activities. In 1991, the two space agencies negotiated a further agreement to share data and samples obtained during the experiments, so that science return from the mission could be maximized.

Spacelab-J constituted a one-time payload, which flew in 1992 on the STS-47 mission.

PAYLOAD PROFILE: SL-J/STS-47

Mission Duration: 8 days **Date:** September 12–20, 1992

Life Science Research Objectives

- To determine the effect of microgravity on frog fertilization and embryonic development
- To study tadpole behavior in space
- To evaluate the effectiveness of autogenic feedback training in reducing human space motion sickness
- To examine the effect of microgravity on critical stages in plant embryogenesis

Life Science Investigations

- Developmental Biology (SLJ-1)
- Neurophysiology (SLJ-2)
- Plant Biology (SLJ-3)

Organisms Studied

- *Homo sapiens* (human)
- *Xenopus laevis* (frog)
- *Hemerocallis* cv. Autumn Blaze (daylily) cells
- *Daucus carota* (carrot) cells

Flight Hardware

- Ambient Temperature Recorder (ATR-4)
- Autogenic Feedback System-2 (AFS-2)
- Cell Culture Chamber (supplied by NASDA)
- Dissecting Microscope
- Frog Environmental Unit (FEU) and Kits
- General Purpose Work Station (GPWS)
- Refrigerator/Incubator Module (R/IM)

Spacelab-J/STS-47

Mission Overview

The STS-47 mission was launched on the Space Shuttle Endeavour on September 12, 1992, and landed eight days later, on September 20. The seven-member crew included the first Japanese astronaut, the first African American woman to fly in space, and the first married couple to fly on the same space mission.

The mission's primary objective was to fly the Spacelab-J (SL-J) payload. Several secondary objectives were also accomplished. The SL-J payload included 34 Japanese experiments and nine American experiments in the areas of materials science and the life sciences. Two of the 16 SL-J life sciences experiments were sponsored by Ames Research Center. The first, the Autogenic Feedback Training Experiment, was conducted on the astronaut crew. The second was the Frog Embryology

Experiment. Kennedy Space Center sponsored the Plant Culture Research Experiment.

Life Sciences Research Objectives

The objective of the SL-J life sciences experiments was to conduct research that would help prepare humans for long-term space ventures. One of the difficulties crew members experience during space flight is Space Adaptation Syndrome, the symptoms of which are similar to those of motion sickness. Microgravity drastically alters the perceptions astronauts have of themselves and objects in space, and about half of all astronauts experience motion sickness shortly after the transition from 1 G. This syndrome interferes with the tightly scheduled work routines on space missions and can be life threatening if experienced while wearing a spacesuit. The Autogenic Feedback Training Experiment (AFTE) was designed to evaluate the effectiveness of autogenic feedback training in reducing space motion sickness. The training combined two self-regulation techniques, autogenic therapy and biofeedback, to enable crew members to control their physiological responses. Autogenic feedback training has many potential uses in alleviating disease symptoms on Earth, such as hypertension, low blood pressure, and nausea associated with chemotherapy. It also has potential nonmedical uses. Aircraft pilots can use autogenic feedback training to reduce the risk of accidents by training themselves to control the abnormal physiological responses associated with emergencies encountered during flying. The training could be used to reduce jet lag, fatigue, insomnia, and the high stress of certain work environments. The first AFTE study, conducted on the Spacelab 3 payload on STS-51B in 1985, verified the concept of autogenic feedback training. The experiment on SL-J continued the evaluation of the training with a redesigned Autogenic Feedback System to allow better data collection and increase crew participant comfort.

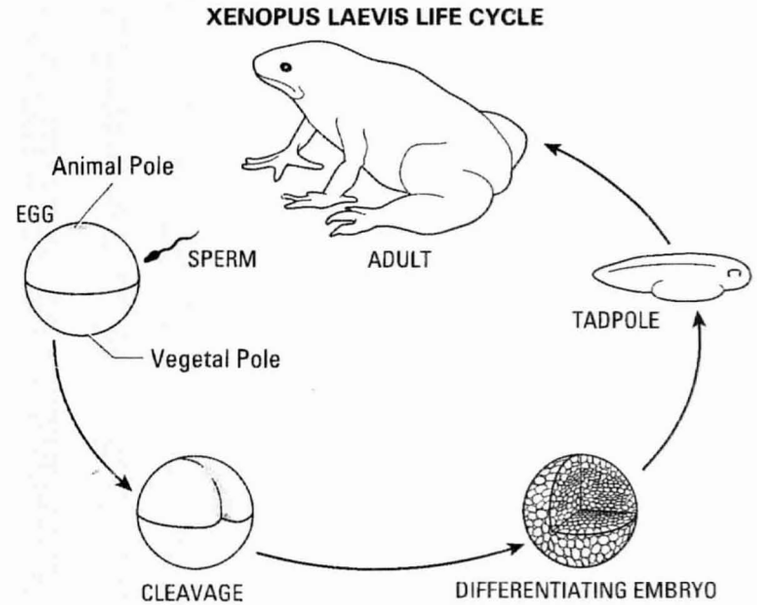

Figure 8. Fertilization of a *Xenopus* egg is followed by cleavage (a succession of cell divisions that partition the large fertilized egg cell into smaller cells), differentiation, and organogenesis. After hatching from the egg, the tadpole will exist in an aquatic stage with gills and a tail, until complex hormonal changes transform it into an adult frog.

Scientists want to determine if reproduction and development occur normally in microgravity. The Frog Embryology Experiment was designed to examine the role of gravity in the fertilization and early development of an organism (Fig. 8). Previous experiments on amphibian development in space have produced inconclusive results, partly because egg fertilization was always carried out in Earth gravity rather

than in space. It is likely that the developmental stages most susceptible to alterations in gravity levels occur just after fertilization. When a frog egg is fertilized, its contents assume a specific orientation with respect to gravity. The symmetry of the frog's body is established at this point in development. The absence of gravity, and therefore the ability of the egg to orient in a particular way, might disrupt the establishment of proper symmetry in the body. In the SL-J frog experiment, scientists attempted to test this hypothesis by fertilizing eggs in microgravity.

The plant experiment was designed to study the critical stages in plant embryogenesis using [illegible]red cells and to study whether mitosis and chromosome behavior are modified by the space environment. Plants may be critical for long-term space flight missions to purify air and provide replenishable food supplies. They are also likely to make the small, enclosed chambers on spacecraft more conducive to human habitation on long-duration flights.

Life Sciences Payload

Organisms

Two crew members participated in the AFTE. One was trained to self-regulate her physiological responses during the flight; and the other, who was not similarly trained, served as a control.

Four adult female South African clawed frogs, belonging to the species *Xenopus laevis*, were studied in the Frog Embryology Experiment. This species was selected for several reasons. There is a large quantity of information already gathered on the South African clawed frog, from which investigators could readily draw. Because fertilization and embryonic development in this frog is external, scientists can initiate timed fertilization by covering the eggs with sperm at specific times. Large egg size makes observation easy, and egg morphology allows identification of fertilized eggs. Care of the frog in a laboratory setting is straightforward, requiring only an aquatic environment and fish food. Because a single female lays hundreds of eggs, a large population of genetically related sibling tadpoles can be obtained for study. Furthermore, females can be conveniently induced to lay eggs by injecting them with the hormone human chorionic gonadotropin (HCG).

The Plant Culture Research Experiment used cultured cells of two plant species: carrot (*Daucus carota*) and daylily (*Hemerocallis* cv. Autumn Blaze).

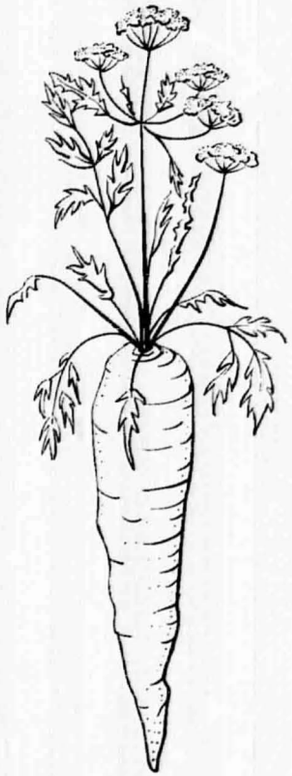

Carrot (*Daucus carota*)

Hardware

For the AFTE, the participating crew member wore the Autogenic Feedback System-2 (AFS-2). The AFS-2 is a portable, belt-worn monitoring device that can continuously record up to eight physiological responses. It is powered by a battery pack and includes a garment, a headband, transducers, biomedical amplifiers, a digital wrist-worn feedback display, and a cassette tape recorder. The parameters recorded and displayed by the AFS-2 are electrocardiogram, heart rate, respiration waveform and rate,

NASA Space Life Sciences in the 1990s

Interview with Joan Vernikos

Joan Vernikos came to Ames Research Center (ARC) as a post-doctoral fellow trained in pharmacology. She was soon hired as a research scientist, studying stress and the stress response in the space environment. In her years at ARC, she went on to hold a number of research and managerial positions in the life sciences area. Since 1993, Vernikos has held the position of Director of the Life Sciences Division at NASA Headquarters.

The 1990s was a busy decade for NASA Life Sciences, a decade of advances and change. One central advance was the growth in systematic access to space. Spacelab Life Sciences 1 and 2 missions, the Life and Microgravity Spacelab, and Neurolab "allowed us, almost every other year, an opportunity to conduct experiments proposed by the science community, asking questions about the effects of space flight, not just in terms of observing the changes, but in terms of understanding why they happen and how they happen," said Vernikos.

Along with more regular access to space, life sciences missions became more sophisticated. SLS-1 was the first mission in which dissections were performed on animal subjects pre- and postflight. SLS-2 marked the first ever inflight dissections, and Neurolab saw the first inflight surgery, allowing animals to recover and continue to adapt through the duration of the flight. "That was the progressive increase in technical achievement," said Vernikos, "and it all happened in the nineties."

Small payloads have also played an important role in the overall increase of life sciences payloads. "We have used whatever mechanisms we can to access flight. Small payloads have been another way of getting regular access for experiments that don't require any inflight manipulation," Vernikos said.

Increased life sciences flight activity over the past decade has led to important scientific findings. "The rapid plasticity of the nervous system was something we learned as a result of the changes that occur in space flight. In the developmental arena, we've seen dramatic changes resulting from not developing in the presence of gravity," said Vernikos. "In the case of the mouse embryo, the investigator saw that the cell cycle increases. Cell production was increased and cell death was reduced."

Much of future life sciences flight research will be conducted on International Space Station (ISS). Vernikos hopes that this platform, as a continuous laboratory, will allow investigators to see the results and then perform the next logical experiment. "The other thing that Station will provide us is the ability to look at a system that has not only developed in microgravity, but also has had a chance to adapt to microgravity. We don't believe that one to two weeks are enough," said Vernikos. "Space Station will provide a way of understanding what chronic exposure and adaptation to this new environment will do."

In recent years, the program has also broadened to include extensive collaboration with other federal research agencies and foreign space agencies. Since 1992, NASA collaboration with the National Institutes of Health (NIH) and the National Science Foundation has grown steadily, helping to leverage funding for life sciences research. "Currently we have approximately 20 agreements with about 12 of the NIH institutes," said Vernikos.

In terms of international cooperation, "We encourage collaboration, teaming, and sharing so that science is best served." Through the International Space Life Sciences Working Group (ISLSWG), Vernikos said that NASA and its international partners have created a system that involves single announcement, solicitation, and international peer review and selection of science flight experiment proposals.

ISLSWG is largely responsible for facilitating development of life sciences research on the ISS, a platform that is helping to foster unprecedented levels of international cooperation in the space life sciences.

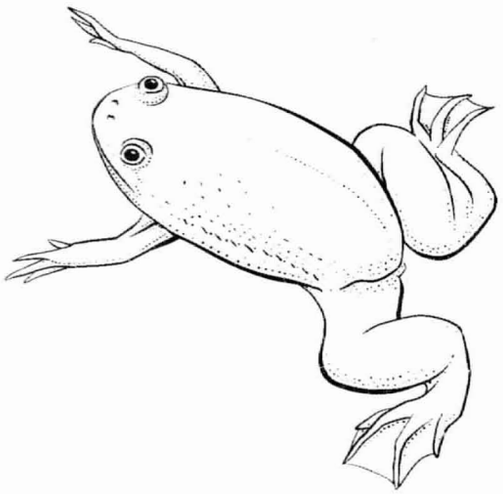

South African Three-Clawed Frog (*Xenopus laevis*)

skin conductance, finger temperature, finger pulse volume, and triaxial accelerations of the head.

Frogs were kept in the Frog Environmental Unit (FEU), which provides a ventilated, temperature-controlled, moist habitat for four female adult frogs as well as a group of developing embryos. The maintenance of a stable temperature is critical for successful frog ovulation and embryo development. Within the FEU, the removable Adult Frog Box housed the frogs. The box is lined with a soft, water-absorbent material to prevent skin abrasion and contains Ringer's solution to keep the frogs moist. The FEU also accommodates two sets of Egg Chamber Units (ECUs). One set of 28 ECUs is kept in microgravity, while the other set of 28 ECUs is kept in a centrifuge inside the FEU, providing a simulated 1-G environment. Each ECU is equipped with a window that allows viewing of the embryo with use of a dissecting microscope and video equipment. The chambers are filled with Ringer's solution and can accommodate injections of fixatives or other materials.

HCG/Sperm Kits and a sperm suspension were stored in the Refrigerator/Incubator Module (R/IM). The R/IM is a temperature-controlled holding unit flown in the Shuttle middeck that maintains a cooled or heated environment.

Embryos and tadpoles were viewed through the Dissecting Microscope, which supports general life sciences experiments requiring capabilities such as examination, dissection, and image recording of tissues and other specimens. Adjustable magnification permits, for example, viewing of a single embryo or entire tadpole flask. The Dissecting Microscope features a video camera and video interface unit that allow recording and downlink of images to the ground.

Crew members performed flight operations for the experiment using the General Purpose Work Station (GPWS). The GPWS can support biological experiments, biosampling, and microbiological experiments, and it can serve as a closed environment for containment while routine equipment repair or other inflight operations are performed. The GPWS cabinet provides workbench accommodations and allows two crew members to simultaneously perform tasks within.

Two Ambient Temperature Recorders (ATR-4) were used to record the temperature of the experiment system so that the researchers would be aware of any temperature anomalies that may have occurred during flight. One was mounted in the Adult Frog Box and the other in the HCG/Sperm Kit. The ATR-4 is a self-contained, battery-powered package that can record up to four channels of temperature data.

Plant cells were contained in Cell Culture Chambers provided by NASDA. These chambers are aluminum petri dish-like compartments. A honeycomb matrix inserted into the base of the chamber provides structural support for the solid agar medium containing the cultured cells. The cells are capable of gas exchange through a gas-permeable membrane at the top of the chamber.

Operations

Preflight

During the months before the mission, a crew member was given autogenic feedback training (AFT). During the training sessions, she was presented with augmented sensory feedback of her own physiological activity levels. While monitoring the feedback, she was instructed to perform specific exercises in order to learn to modify her autonomic responses. Several baseline physiological measurements were taken of all crew members, both trained and untrained. Motion sickness was induced during training by use of a rotating chair, a vertical acceleration device, and flights in the KC-135 aircraft. The rotating chair provides a clockwise Coriolis acceleration force. The vertical acceleration device can be displaced 2.5 feet upwards or downwards at programmable frequencies and gravity loads. The KC-135 is a pressurized Boeing 707 aircraft that can provide short periods of simulated microgravity during parabolic flights.

The sperm solution for inflight fertilization of frogs was prepared, sealed, and refrigerated. The whole testis was macerated and the solution was diluted to activate the sperm before use. Four frogs were loaded into the Adult Frog Box about 30 hours before the launch of the Shuttle. The box was placed in the FEU in the Spacelab.

About one week before flight, plant cell cultures were prepared at the investigator's laboratory. Cultured cells were transferred to two Plant Culture Chambers and allowed to solidify in nutrient medium containing an agar-like agent. The chambers were then hand-carried by commercial airliner to KSC. The chambers were kept in an unlit incubator at 22±2 °C until 17 hours before launch, when they were loaded into the Shuttle middeck. Simultaneous ground controls were maintained at the investigator's laboratory.

Inflight

For the AFTE, a crew member wore the AFS-2 for the first three days of the mission. She also used an 11-item symptom logbook to record the type and severity of symptoms at specially designated times during the mission and at any time that she experienced symptoms. She was required to perform daily 15-minute sessions during which she practiced controlling specific physiological responses with the help of the wrist-worn display unit. If she experienced symptoms during the flight she was required to apply the AFT methods to control them.

On the first day of flight, the crew injected the four frogs with human chorionic gonadotropin (HCG), inside the GPWS (Fig. 9). Approximately one day later, eggs were obtained from each flight frog and fertilized using the Sperm Kit. The percentage of fertilized eggs from each individual frog was noted to be relatively high. Eggs from the two best frogs were loaded into 22 egg chambers and placed in the FEU. Ten chambers were incubated in the centrifuge and 12 chambers were incubated in microgravity. Some eggs from both control and experiment groups were fixed with formaldehyde at 2.5 hours, 14 hours, and 22 hours after fertilization. Eggs arrested in these developmental stages were stored for postmission analysis. Some eggs from both groups were allowed to hatch undisturbed into tadpoles. The swimming behavior of the tadpoles was filmed and also downlinked directly to a ground station. Tadpoles were stored in the R/IM for reentry.

For the Plant Cell Culture Experiment, ambient temperatures were recorded in the vicinity of the experiment package.

Postflight

Shortly after landing, the AFTE investigators interviewed the subject crew member about her experience of participating in the AFTE. Flight hardware, data tapes, and log books were returned to the investigator's laboratory within 24 hours of landing. The results of the AFTE from Spacelab-J were compared with the results from five other trials of the AFTE performed on other flights.

Preserved frog embryos and some of the live tadpoles brought back to Earth were microscopically examined to determine if microgravity affected their anatomy. Extensive behavioral tests of the tadpoles were conducted during the nine days following landing. Other tadpoles were raised to sexual maturity and mated to determine if microgravity affects multigenerational development.

The plant cell culture chambers were removed from the orbiter about three hours after landing and transported to the investigator's laboratory.

Results

Human Study

Results were collected across multiple missions; however, flight data were collected for only six subjects (three treatment and three controls). The flight results showed that two AFTE subjects were symptom free, while the third had moderate symptoms on the first mission day. Two control subjects experienced vomiting episodes on the first three mission days, despite having taken medication. The third experienced mild symptoms. It was concluded that AFT is effective in controlling space motion sickness in some subjects, and that effectiveness is related to preflight learning ability.

Frog Study

Despite a few early developmental differences between the microgravity experiment group and the 1-G flight control groups, development

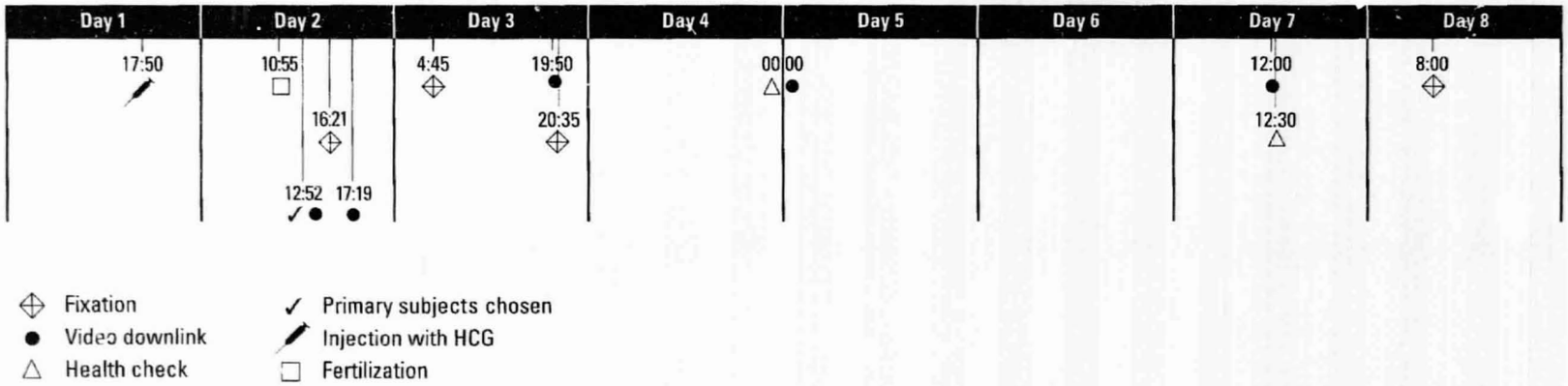

Figure 9. Inflight activities for the development study using the Frog Environmental Unit.

to the neurula stage, in which the embryo first begins to develop the nervous system, was largely unimpaired in microgravity. All fixed neurula and tadpoles seemed normal. However, tadpoles that developed in microgravity failed to find an air/water interface and inflate their lungs. Within a few hours postflight, the tadpoles were observed to gulp air through inflating their lungs. Failure to inflate their lungs would have had serious effects on the frogs at metamorphosis had they been kept at microgravity for multigenerational studies. The flight tadpoles showed stronger optomotor behavioral responses than the control tadpoles, perhaps indicating additional reliance on visual information to compensate for the lack of gravitational cues. This difference disappeared by nine days postflight.

Plant Cell Study

Numbers of developed embryos and cells in division at time of recovery were significantly fewer in space-flown samples than in the ground controls. Significant aberrations in chromosome structure were found in the space-flown samples but not in the ground controls.

Additional Reading

Black, S., K. Larkin, N. Jacqmotte, R. Wassersug, S. Pronych, and K. Souza. Regulative Development of *Xenopus laevis* in Microgravity. *Advances in Space Research*, vol. 17(6/7), 1996, pp. 209–217.

Cowings, Patricia S. and William B. Toscano. *Autogenic Feedback Training As a Preventive Method for Space Motion Sickness: Background and Experimental Design*. NASA TM-108780, August 1993.

NASA. STS-47 Press Kit, September 1992. Contained in NASA Space Shuttle Launches Web site. http://www.ksc.nasa.gov/shuttle/missions/missions.html.

Physiological Systems Experiment (PSE) Payloads

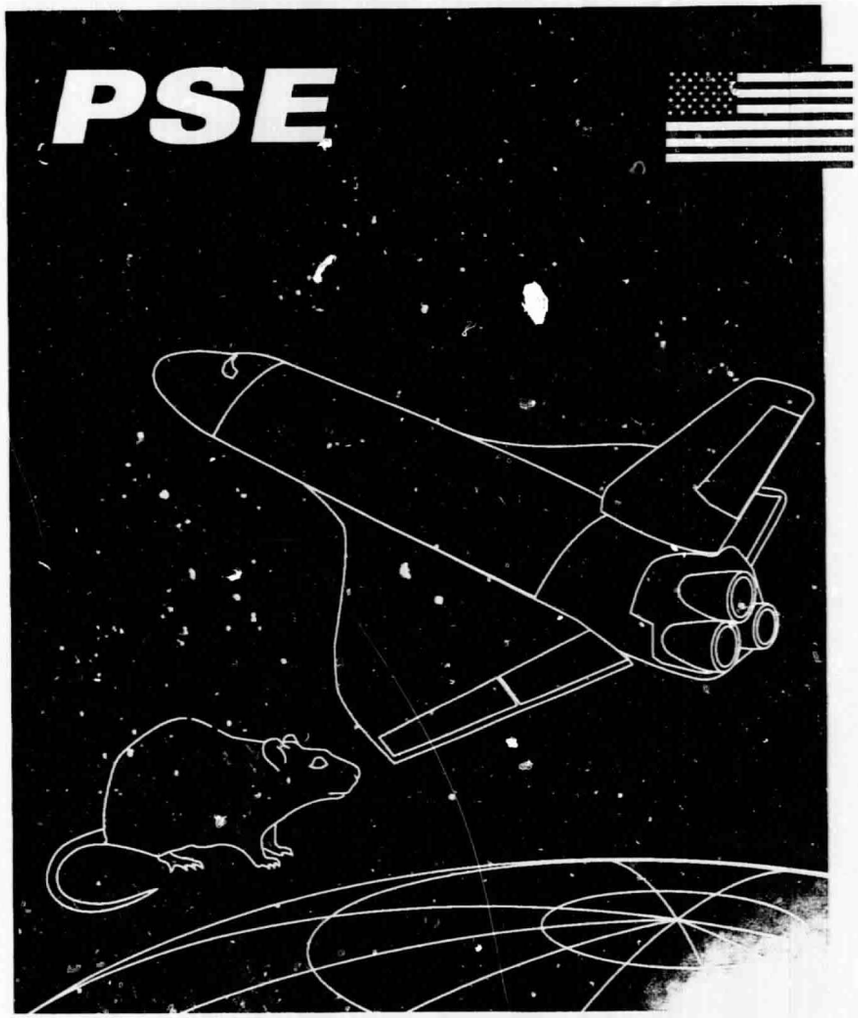

The Physiological Systems Experiment (PSE) program was designed to provide commercial developers of biotechnology products with opportunities to conduct experiments in the space environment. Experiments in the program were sponsored by Ames Research Center and jointly developed by one of NASA's Commercial Space Centers (CSC) and a commercial partner.

The objective of the program was to encourage research into the physiological changes that occur in living systems when they are exposed to microgravity conditions. The three PSE payloads flown in the 1991–1995 time period were designed to test commercially developed pharmaceutical products that were expected to prevent or rectify the adverse effects of space flight on bone and muscle, tissue repair processes, and immune system function. If proven effective, such pharmaceuticals could be used to treat astronauts on long-duration space flight missions. The products are also likely to have applications on Earth, where similar problems can occur as a result of aging and several disease conditions.

The PSE experiments were conducted in small payloads flown in the Shuttle middeck or in the SPACEHAB module (see Chapter 3 for a description of the module). Like all middeck payloads, they required minimal crew time and spacecraft power. All preflight and postflight experiment procedures were developed and implemented by the commercial partners with NASA oversight, to ensure that they were compatible with Shuttle interfaces and safety requirements. The commercial

partners leased hardware from NASA and paid a fee for Shuttle transportation. By agreement, all scientific results have been kept confidential until release by the commercial partners. The identity and the chemical composition of the pharmaceuticals under development have also remained confidential until company disclosure. For the purposes of payload approval and mission safety, they were revealed only to: a NASA toxicologist, who evaluated risks to the crew in case of accidental exposure; the NASA animal care and use panel, who evaluated impacts of their use on animal welfare; and a safety panel who considered the risks of accidental exposure during preflight and postflight periods.

The first Shuttle mission to carry a PSE payload was STS-41, which flew in 1990. Three Shuttle missions were flown with PSE payloads during the 1991–1995 period: STS-52, STS-57, and STS-62.

PAYLOAD PROFILE: PSE.02/STS-52

Mission Duration: 10 days **Date:** October 22–November 1, 1992

Life Science Research Objectives

- To study the capacity of a synthetic protein to halt or slow down bone loss in rats

Life Science Investigations

- Bone Physiology (PSE2-1, 2)

Organisms Studied

- *Rattus norvegicus* (rat)

Flight Hardware

- Ambient Temperature Recorder (ATR-4)
- Animal Enclosure Module (AEM)
- AEM Water Refill Box

Physiological Systems Experiment 2/STS-52

Mission Overview

The 10-day STS-52 mission was launched on the Space Shuttle Columbia on October 22, 1992. The mission terminated with the landing of the Columbia orbiter on November 1. Six crew members flew aboard the Shuttle, including an astronaut from the Canadian Space Agency.

The mission had two primary objectives: to deploy NASA's Laser Geodynamic Satellite and to fly the U.S. Microgravity Payload-1. STS-52 also had many secondary objectives, one of which was to fly the Physiological Systems Experiment 2 (PSE.02). The PSE.02 payload was jointly developed by Merck & Co., Inc. and the Center for Cell Research, a NASA Commercial Space Center at Pennsylvania State University.

Life Sciences Research Objectives

Osteoporosis is a disease marked by a progressive loss of bone mass. It currently affects a large number of Americans, particularly post-menopausal women. Prolonged immobilization of any kind can cause bone loss; it is, therefore, a problem also faced by bedridden or paralyzed patients Because exposure to microgravity results in a loss of bone mass similar to the effects of osteoporosis and immobilization, the space environment serves as a laboratory for studying these conditions. The changes seen in bone tissue after exposure to microgravity are, in fact, more similar to the changes seen in osteoporosis than are changes induced in experimental animals on the ground by neurectomy, the excision of part of a nerve. The PSE.02 payload was designed to enable Merck scientists to study the capacity of a synthetic protein molecule to

halt or slow bone loss in microgravity. The protein has potential use in countering conditions that involve loss in bone mass. It may also be useful for combatting the bone loss that is likely to be experienced by astronauts on long-term space flights in the future. The identity of the protein is considered proprietary information.

Life Sciences Payload

Organisms

Twenty-four healthy adolescent male albino rats (*Rattus norvegicus*) acted as experiment subjects. Twelve rats were used in the flight group and 20 rats were used in the ground control groups. Each weighed between 150 and 225 g at launch.

Hardware

Rats were housed in Animal Enclosure Modules (AEMs). The AEM is a self-contained animal habitat, storable in a Shuttle middeck locker that provides ventilation, lighting, food, and water for a maximum of six adult rats. Fans inside the AEM circulate air through the cage, which passively controls the temperature. A filtering system controls waste products and odors. Although the AEM does not allow handling of contained animals, a clear plastic window on the top of the unit permits viewing or video recording. The Water Refill Box enables inflight replenishment of water.

An Ambient Temperature Recorder (ATR-4) accompanied each AEM. The ATR-4 is a self-contained, battery-powered package that can record up to four channels of temperature data.

Operations

Preflight

Upon receipt, animals not assigned to a vivarium control group were placed in the Elevated Temperature Equilibrium Group, which was allowed to acclimate to 28 °C for at least seven days prior to launch. The flight group of rats was chosen from the elevated temperature group and matched by weight into pairs three days before launch. One rat in each pair was given subcutaneous injections of the anti-osteoporotic protein two days prior to flight. One day before the flight, they were given a second dose of the protein and an injection of the bone marker calcein. The remaining six rats were flown as an untreated control group. They were injected with a saline placebo two days before flight and with saline and calcein one day before the flight.

Two AEMs with the flight rats were installed in the orbiter about 19 hours before launch.

Inflight

Eight rats served as a vivarium control, while 12 rats treated in a manner identical to the flight rats formed a 24-hour delayed synchronous control on the ground (Table 7).

The crew made daily observations of the animals, verified that the experiment hardware was functioning normally, and operated the AEM Water Refill Assembly, as needed.

Postflight

After the rats were recovered from the Shuttle, they were weighed and subjected to a health check. A blood sample was collected from each

animal under anesthesia. Each rat was then given an intraperitoneal injection of oxytetracycline, a second bone marker, and placed in a metabolic cage for the collection of urine samples. The rats were then shipped to the investigators' laboratory and euthanized before tissues were collected for processing. Scientists from Merck and the Center for Cell Research analyzed the tissue samples.

Results

Most of the experimental data remains proprietary information of Merck & Co. However, the company did report that the compound significantly reduced microgravity-induced endocortical bone resorption in comparison with saline-treated controls.

VARIABLES	Flight	Synchronous Control	Vivarium Control
Number of Rats	12	12	8
Launch/ Recovery Stress	actual	none	none
G-Force	micro-G	1 G	1 G
Food Available	ad lib	ad lib	ad lib
Housing	group (6 per cage)	group (6 per cage)	group (2–3 per cage)
Environment	spacecraft conditions	simulated spacecraft conditions	standard lab conditions

Table 7. Flight and Control Groups for PSE.02 Rodents.

Additional Reading

NASA. STS-52 Press Kit, October 1992. Contained in NASA Space Shuttle Launches Web site. http://www.ksc.nasa.gov/shuttle/missions/missions.html.

PAYLOAD PROFILE: PSE.03/STS-57

Mission Duration: 10 days **Date:** June 21–July 1, 1993

Life Science Research Objectives
- To study the role that growth factors play in tissue repair

Life Science Investigations
- Bone Physiology (PSE3-1, 2)

Organisms Studied
- *Rattus norvegicus* (rat)

Flight Hardware
- Ambient Temperature Recorder (ATR-4)
- Animal Enclosure Module (AEM)
- AEM Water Refill Box

Physiological Systems Experiment 3/STS-57

Mission Overview

The orbiter Endeavour began its 10-day STS-57 mission on June 21, 1993. The mission was originally scheduled to begin on April 28, 1993. Four 14-day delays occurred before the actual launch on June 21. The mission terminated with the landing of Endeavour on July 1. A six-member crew flew onboard the Shuttle.

The primary mission objective was to retrieve the European Space Agency's European Carrier (EURECA) satellite. The mission had several secondary objectives, one of which was to carry a group of experiment payloads contained within the SPACEHAB facility. SPACEHAB is a commercially developed laboratory that augments the Shuttle's middeck capacity, providing experiment rack space that can be accessed and tended by crew members.

One of the payloads within SPACEHAB was the third in the series of Physiological Systems Experiment (PSE.03) payloads. PSE.03 was jointly sponsored by the NASA Center for Cell Research and a commercial partner, ConvaTec, a Bristol-Myers Squibb company.

Life Sciences Research Objectives

The PSE.03 payload was designed to study the roles of two growth factors involved in accelerating or enhancing tissue repair. Microgravity, like certain conditions on Earth, appears to slow down the process of tissue repair. Studies carried out on the Russian Cosmos 2044 biosatellite mission have suggested that muscle and bone repair are slower in microgravity. Collagen metabolism in unwounded skin is

also known to be altered in microgravity. Since wound healing is dependent on adequate collagen deposition in the vicinity of the wound, it is likely that skin healing will also be altered in microgravity. The results of the experiment may help dermatologists to devise therapies for astronauts who receive skin or soft-tissue injuries during long-duration space flight. Data gathered during the STS-57 mission was also expected to be useful in developing skin treatments for burn victims, diabetics, elderly surgical patients, bed-sore sufferers, and other skin-injury patients on Earth.

Life Sciences Payload

Organisms

The experiment was conducted on adult male rats (*Rattus norvegicus*) belonging to the Fischer 344 strain. This strain of rat was flown for the first time on this mission in order to satisfy space, weight, and food availability restrictions. Rats of this strain were selected because they consume less food and water than Sprague-Dawley rats consume, and therefore gain less weight in a given period of time. Use of the Fischer 344 strain allowed the flight of adult rats without having to reduce the size of the sample. Twelve rats were used in the flight group, while 44 rats were used in ground control groups.

Hardware

The rats were housed in Animal Enclosure Modules (AEMs). An Ambient Temperature Recorder (ATR-4) was flown along with the AEMs to record the temperature of the rat cages. For general descriptions of the AEM and the ATR-4, see PSE.02.

Operations

Preflight

The main objective of the mission, retrieval of the EURECA satellite, meant that the Shuttle had a narrow launch window on any particular day. Each delay required the launch time to be moved ahead by 30 minutes for the next designated launch day. Correspondingly, each of the four delays required the animals' day/night cycle, which was set to correspond to Shuttle launch time, to be moved ahead by seven hours.

As in the PSE.02 experiment, upon receipt at Kennedy Space Center, the animals not assigned to a vivarium control group were placed in the Elevated Temperature Equilibrium Group, which was allowed to acclimate to 28 °C for at least seven days prior to launch. The flight group of rats was chosen from the elevated temperature group two days before launch.

Preflight experiment procedures included the implantation of growth factors into six different sites in each of the 12 rats. Two days before the launch, 20 rats, matched by weight into pairs, were selected from a group of animals maintained at 28 °C. About a day later, these 20 rats were anesthetized and sterile polyvinyl alcohol sponges, containing timed-release pellets, were surgically implanted into six areas in the subcutaneous tissue of the abdomen.

The pellets contained either growth factor A, growth factor B, or a placebo. One animal in each of the matched pairs was implanted with pellets that began releasing the growth factors or placebo immediately after implantation. The other animal in each pair was implanted with pellets coated with a substance that dissolved slowly, releasing the growth factors or placebo only after the rats had entered microgravity.

Using two different kinds of pellets allowed scientists to differentiate between the growth factor-induced tissue repair and wound healing during the period from surgery to launch and during the period in microgravity. Previous investigations that used only a pellet that released growth factor immediately obfuscated the results because the healing process began before exposure to microgravity. Approximately five hours after implantation, the animals were injected with calcein.

The flight group of 12 rats was chosen from the 20 that were implanted with pellets. The remaining eight rats served as the basal control group.

Inflight

There were four groups of control rats on the ground (Table 8). The basal control group was euthanized immediately after launch in order to obtain baseline physiological data. The delayed synchronous control group was maintained in AEMs within the Orbiter Environmental Simulator (OES). The OES is a modified environmental chamber at Kennedy Space Center whose temperature, humidity, and CO_2 level are electronically controlled based on downlinked environmental data from the orbiter. Thus the animals within the chamber are exposed to environmental conditions that are similar to those experienced by the flight

VARIABLES	Flight	Basal Control	AEM Delayed Synchronous	28 °C Vivarium Control	22 °C Vivarium Control
Number of Rats	12	8	12	12	12
Launch/ Recovery Stress	actual	none	none	none	none
Gravitational Force	micro-G	1 G	1 G	1 G	1 G
Food Available	ad lib	ad lib	ad lib	ad lib	ad lib
Housing	group (6 per cage)	group (2 per cage)	group (6 per cage)	group (1–2 per cage)	group (1–2 per cage)
Environment	spacecraft conditions	standard lab conditions	simulated spacecraft conditions	standard lab conditions temp.=28 °C	standard lab conditions temp.=22 °C

Table 8. Flight and Control Groups for PSE.03 Rodents.

group during the mission. The two remaining control groups were housed in vivarium cages, one at 28 °C and the other at 22 °C. The vivarium animals received the same surgical treatment as did the flight and delayed synchronous control groups.

The crew made daily observations of the animals, verified that the experiment hardware was functioning normally, and downlinked daily recordings of temperature data, which were used to control the Orbiter Environmental Stimulator on the ground.

On the first flight day, the crew reported a malfunction in the switch that automatically set the day and night light cycle in one of the AEMs. For the remainder of the flight, the crew manually switched the light cycle on and off.

Postflight

The animals were removed from the Shuttle about three hours after landing. They were weighed, subjected to a health check, and injected either with a saline solution or a mixture of hypothalamic releasing hormones. Approximately half an hour later, they were euthanized. The tissues surrounding the surgical implantation sites were examined to determine the effect of the growth factors on tissue repair. All the ground control groups were euthanized 48 hours after the flight groups.

Results

Both growth factors showed positive effects in the ground control rats, but only the immediate-release pellets of the first growth factor and the delayed-release pellets of the second growth factor had a significant, positive effect on the flight rats. These results may be due to the two-day delay in the Shuttle launch, which caused the growth factors to be released earlier during space flight than planned. Microgravity significantly reduced wound collagen concentration, regardless of the treatment group. Overall, the results show that a highly standardized wound repair process in young rats is significantly altered by space flight.

Additional Reading

NASA. STS-57 Press Kit, June 1993. Contained in NASA Space Shuttle Launches Web site. http://www.ksc.nasa.gov/shuttle/missions/missions.html.

PAYLOAD PROFILE: PSE.04/STS-62

Mission Duration: 14 days **Date:** March 4–18, 1994

Life Science Research Objectives

- To study the relationship between the musculoskeletal and immune systems in rats

Life Science Investigations

- Bone Physiology (PSE4-1, 2)

Organisms Studied

- *Rattus norvegicus* (rat)

Flight Hardware

- Ambient Temperature Recorder (ATR-4)
- Animal Enclosure Module (AEM)
- AEM Water Refill Box

Physiological Systems Experiment 4/STS-62

Mission Overview

The STS-62 mission was launched aboard the Space Shuttle Columbia on March 4, 1994. After orbiting the Earth for 14 days, Columbia landed on March 18. A five-member crew flew on the mission.

The primary mission objective was to conduct science experiments associated with the United States Microgravity Payload 2 and the Office of Aeronautics and Space Technology 2 payloads. One of the secondary objectives of the mission was to fly the Physiological Systems Experiment 4 (PSE.04). The PSE.04 payload was sponsored by Ames Research Center and developed by NASA's Center for Cell Research. NASA's commercial partner in the experiment was the Genetics Institute in Cambridge, Massachusetts.

Life Sciences Research Objectives

The PSE.04 payload was designed to study the relationship between the immune system and the musculoskeletal system during exposure to microgravity. Previous space flight experiments have shown that both immune and musculoskeletal functions are impaired in microgravity. Some disease conditions on Earth, such as DiGeorge syndrome, adenosine deaminase deficiency, and cartilage hair hypoplasia, also result in simultaneous impairment of these systems, suggesting that their physiological controls may by linked. The capacity of the immune system to influence bone remodeling also provides evidence for a functional link between the immune and skeletal systems. In the PSE.04 experiment, rats were supplied with a protein that affects both immune

and musculoskeletal functions to determine if it is able to halt or slow the impairments observed under microgravity conditions. The experiment also sought to determine whether the physiological controls of the immune and skeletal systems are closely linked in mammals. NASA's commercial partner in the study, Genetics Institute, expected the protein to have potential applications in treating human diseases on Earth that affect both immune and skeletal systems simultaneously.

Life Sciences Payload

Organisms

Seventy-two healthy adult ovariectomized female rats (*Rattus norvegicus*) of the Fisher 344 strain acted as the experiment subjects. Twelve rats were used in the flight group and 60 rats were used in ground control groups. The Fisher 344 strain was selected for the experiment because it has a lower body weight and consumes less food and water than the frequently used Sprague-Dawley strain does. Each rat weighed about 170 g at launch. Smaller rats were desirable because the PSE.04 experiment objectives required older animals than those used by most Shuttle experiments. Using Sprague-Dawley rats of this age would be difficult because of space and food availability limitations posed by the flight hardware that houses and feeds the rats.

Hardware

The rats were housed in Animal Enclosure Modules (AEMs). An Ambient Temperature Recorder (ATR-4) was flown along with each AEM to record the temperature environment of the rat cages. For general descriptions of the AEM and the ATR-4, see PSE.02.

Operations

Preflight

The agreement between NASA and Genetics Institute required that the specific procedures used to prepare the rats for the experiment and to process them after the flight remain confidential.

Rats were housed in pairs in standard vivarium cages at 28 °C. About 24 hours before launch, six of the rats were each implanted in a ventral abdominal location with six pellets that released the experimental protein slowly over time. The remaining six rats were each implanted with six pellets that contained a placebo. All rats were then given an intraperitoneal injection of calcein, to measure bone growth over time. Shortly afterwards, they were loaded into two AEMs and transported to the launch pad.

Inflight

There were six groups of ground control rats (Table 9). The first, the basal control group, contained six rats that were euthanized on the day of launch to provide baseline data. The second contained 12 pellet-implanted rats housed in vivarium conditions at 22 °C. The third group contained six rats that were not implanted with pellets; they were housed in a 22 °C vivarium. The fourth group, containing 12 pellet-implanted rats, was housed in a 28 °C vivarium. The fifth contained six rats without implanted pellets in a 28 °C vivarium. The last group contained 12 pellet-implanted rats in AEMs maintained at 28 °C. The three groups that were housed at 28 °C were kept in the Orbiter Environmental Simulator (OES). For a general description of the OES, see PSE.03. Controls were housed in two different temperature environments to ensure that any

effect seen in the flight rats was due to microgravity, rather than to the slightly elevated temperatures that usually occur on the Shuttle middeck.

The implanted pellets were designed to release the drug into the tissues of the flight rats about 48 hours after launch.

During the flight, the rats had free access to food and water. The light cycle in their cages was set to 12 hours of light alternating with 12 hours of darkness. The crew made daily observations of the animals, verified that the experiment hardware was functioning normally, and downlinked daily recordings of temperature data, which were used to control the OES on the ground.

Postflight

Shortly after recovery, flight rats were weighed and given a health check. They were subsequently euthanized and tissue samples were taken for analysis.

Results

The agreement between NASA and Genetics Institute requires that the results of the PSE.04 experiment remain confidential. Genetics Institute has not yet released information regarding the results of its experiment.

VARIABLES	Flight	Basal Control	Pellet-Implanted 22 °C Vivarium Control	Nonimplanted 22 °C Vivarium Control	Pellet-Implanted 22 °C Vivarium Control	Nonimplanted 22 °C Vivarium Control	Implanted 28 °C AEM Control
Number of Rats	12	6	12	6	12	6	12
Launch/ Recovery Stress	actual	none	none	none	none	none	none
Gravitational Force	micro-G	1 G	1 G	1 G	1 G	1 G	1 G
Food Available	ad lib	ad lib	ad lib	ad lib	ad lib	ad lib	ad lib
Housing	group (6 per cage)	group (2 per cage)	group (3–4 per cage)	group (3–4 per cage)	group (3–4 per cage)	group (3–4 per cage)	group (6 per cage)
Environment	spacecraft conditions	standard lab conditions standard lab	conditions temp.=22 °C standard lab	conditions temp.=22 °C standard lab	conditions temp.=22 °C standard lab	conditions temp.=22 °C simulated	spacecraft conditions

Table 9. Flight and Control Groups for PSE.04 Rodents.

Additional Reading

Morey-Holton, Emily R. and Sara Bond Arnaud. Skeletal Responses to Spaceflight. In: *Advances in Space Biology and Medicine*, vol.1, edited by Sjoerd L. Bonting. Greenwich, CT, and London, England: Jai Press Inc., 1991, pp. 37–69.

NASA. STS-62 Press Kit, March 1994. Contained in NASA Space Shuttle Launches Web site. http://www.ksc.nasa.gov/shuttle/missions/missions.html.

Page intentionally left blank

IMMUNE Payloads

The IMMUNE program was designed to fly small commercial payloads on Shuttle missions. Ames Research Center provided assistance in managing the payloads, which were sponsored by BioServe Space Technologies, a NASA Commercial Space Center. NASA's commercial partner for both payloads was Chiron Corporation in Emeryville, California.

The IMMUNE program provided opportunities for researchers to study the effect that microgravity has on immune system functions. Studies on both IMMUNE payloads tested a pharmaceutical that may help prevent or reduce immune system suppression. The experiments used rodents as subjects.

Experiments were conducted in small payloads flown in the SPACEHAB module and required minimal crew attention. Chiron Corporation leased hardware from NASA and paid a fee for Shuttle transportation. With NASA oversight, Chiron Corporation developed and implemented all preflight and postflight experiment procedures. By agreement, all scientific results have been kept confidential until released by the commercial partner.

Two Shuttle missions were flown with IMMUNE payloads during the 1991–1995 period: STS-60, which flew in 1994; and STS-63, which flew in 1995.

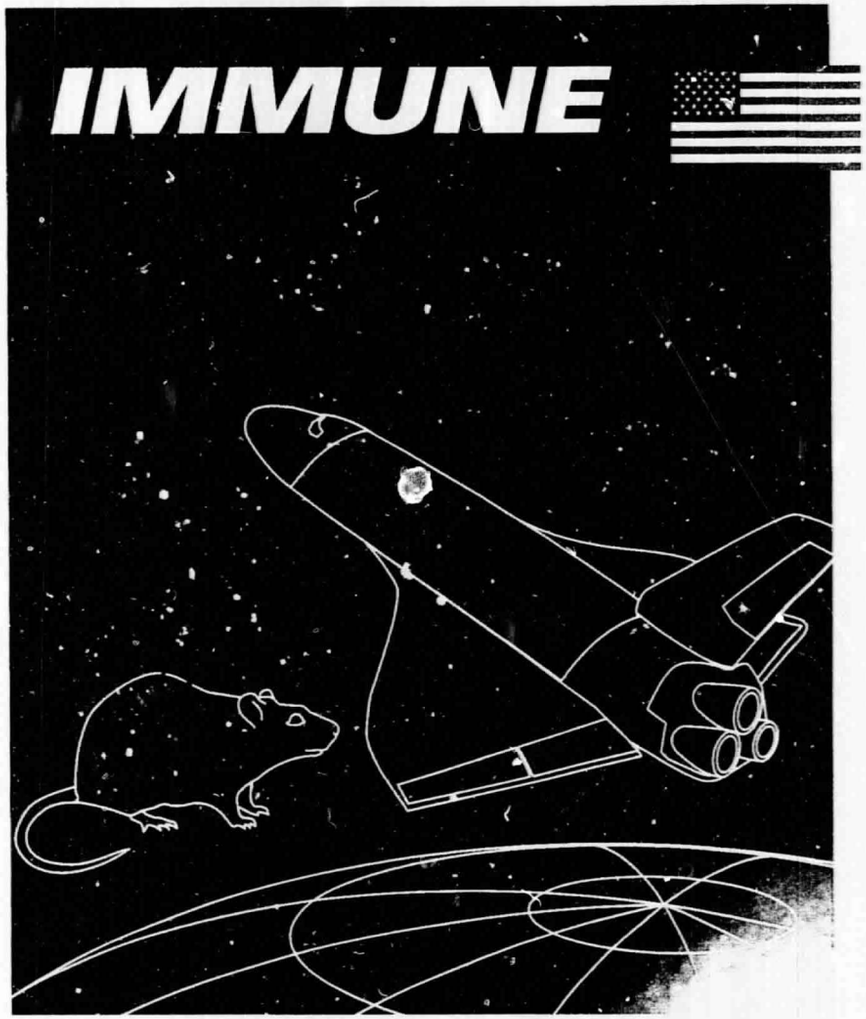

PAYLOAD PROFILE: IMMUNE.1/STS-60

Mission Duration: 8 days **Date:** February 3–11, 1994

Life Science Research Objectives
- To measure the response of the rat immune system to microgravity

Life Science Investigations
- Immunology (IMMUNE1-1)

Organisms Studied
- *Rattus norvegicus* (rat)

Flight Hardware
- Ambient Temperature Recorder (ATR-4)
- Animal Enclosure Module (AEM)
- AEM Water Refill Box

IMMUNE.1/STS-60

Mission Overview

The STS-60 mission was launched on the Space Shuttle Discovery on February 3, 1994. After eight days in Earth orbit, Discovery landed on February 11. The six-member crew included a Russian mission specialist who was the first cosmonaut to fly aboard the Shuttle.

The primary mission objectives were to deploy and retrieve the Wake Shield Facility, a satellite that creates a vacuum environment for conducting materials processing experiments, and to use Discovery as a science platform for conducting the experiments in the SPACEHAB module. STS-60 was the second flight of SPACEHAB.

One of many secondary objectives was to fly the IMMUNE 1 payload, located within the SPACEHAB module. Ames Research Center provided assistance in managing the payload, which was sponsored by BioServe Space Technologies, a NASA Commercial Space Center at the University of Colorado, Boulder, and Kansas State University, Manhattan. Chiron Corporation in Emeryville, California, was the corporate affiliate leading the experiment.

Life Sciences Research Objectives

The objective of the payload was to measure the immune responses of rats to microgravity exposure. Investigators hoped to learn about ways to prevent or reduce the immune system suppression that occurs as a result of some serious disease conditions and old age. The microgravity environment provides a unique opportunity for this type of study because it typically induces short-term suppression of the immune system in both

animals and humans. Polyethylene glycol-interleukin-2 (PEG-IL-2), a compound known to reduce immune system suppression, was tested on the rats. PEG-IL-2 is a longer-lasting version of the commercially available drug recombinant interleukin-2, which is currently used in therapy for kidney cancer. PEG-IL-2 appears to have both anti-viral and anti-bacterial properties. Potential applications include treating diseases on Earth, such as cancer, AIDS, and primary immunodeficiency in children, and reducing the immunosuppressive effects of advanced age. It may also be useful in preventing immunosuppression or restoring immune function in astronauts who will live and work for long periods in the International Space Station. The data gathered from the experiment were also expected to help scientists develop a computer model of human immune system disorders.

Life Sciences Payload

Organisms

Thirty-six male specific pathogen free rats (*Rattus norvegicus*) belonging to the Sprague-Dawley CD strain acted as the experiment subjects. This strain was selected because Chiron Corporation normally uses it to test the activity of interleukin-2. Twelve rats were used in the flight group and 24 rats were used in ground control groups.

Hardware

Rats were housed in Animal Enclosure Modules (AEMs). The AEM is a self-contained animal habitat, storable in a Shuttle middeck locker, which provides ventilation, lighting, food, and water for a maximum of six adult rats. Fans inside the AEM circulate air through the cage, passively controlling the temperature. A filter system controls waste products and odors. Although the AEM does not allow handling of contained animals, a clear plastic window on the top of the unit permits viewing or video recording. The Water Refill Box enables inflight replenishment of water.

An Ambient Temperature Recorder (ATR-4) accompanied each AEM. The ATR-4 is a self-contained, battery-powered package that can record up to four channels of temperature data.

Operations

Preflight

Once animals arrived at the launch site, they were allowed to acclimate to the 28 °C temperature expected to occur within the AEMs during the flight. About one day before the flight, six rats were injected with PEG-IL-2 intravenously in their tails and six flight control rats were injected with saline. Two AEMs with the flight rats were loaded into the orbiter about 10 hours before launch.

Inflight

Two groups, each with 12 rats, served as ground controls (Table 10). The control groups were treated in a manner identical to the flight animals, after a 23-hour delay. The delayed synchronous control group was housed in AEMs within the Orbiter Environmental Simulator (OES), which is in a modified environmental chamber at Kennedy Space Center whose temperature, humidity, and CO_2 level are electronically controlled based on downlinked environmental data from the orbiter. Thus the animals/plants within the chamber are exposed to environ-

mental conditions that are similar to those experienced by the flight group during the mission. The vivarium control group was housed in cages at 28 °C.

During flight, the rats had free access to food and water. Their light cycle was set to 12 hours of light alternating with 12 hours of darkness. The crew made daily observations of the animals through the cover of the AEM, verified that the experiment hardware was functioning normally, refilled the AEM Water Refill Box when necessary, and downlinked daily recordings of temperature data, which were used to control the OES on the ground.

VARIABLES	Flight	AEM Delayed Synchronous Control	28 °C Vivarium Control
Number of Rats	12	12	12
Launch/ Recovery Stress	actual	none	none
G-Force	micro-G	1 G	1 G
Food Available	ad lib	ad lib	ad lib
Housing	group (6 per cage)	group (6 per cage)	group (6 per cage)
Environment	spacecraft conditions	simulated spacecraft conditions	standard lab conditions

Table 10. Flight and Control Groups for IMMUNE.1 Rodents.

Postflight

The flight AEMs were opened about three hours after the Shuttle landed. All flight rats were examined and euthanized shortly afterwards to provide tissues for analysis. The delayed synchronous group was processed 23 hours later, and the vivarium control group was processed 46 hours after landing.

Results

All flight animals appeared to be in overall good health and had gained a considerable amount of weight during the flight. Six of the 12 flight rats had injured tails. The investigators concluded that the affected animals had received thermal injuries to their tails preflight, when their tails were warmed in water prior to injection of PEG-IL-2 or saline. The injuries appeared to have been exacerbated by the suppression of normal healing during the flight.

Rats treated with PEG-IL-2 did not gain as much weight as the control animals, though this trend was not statistically significant in all comparisons. Treated rats experienced an increase in spleen-to-brain ratio, which is an expected consequence of the drug treatment. Treated rats in the flight and synchronous control groups experienced an increase in the thymus-to-brain ratio, a measure of stress. There were no differences in the number of total white blood cells or in number or percentage of monocytes or lymphocytes (two types of white blood cells) between flight and control groups. However, the number of neutrophils (another type of white blood cell) was significantly higher in treated flight and synchronous control animals. No significant changes were observed in bone physiology. These results were later compared to the results of IMMUNE.2, which flew on STS-63.

Additional Reading

NASA. STS-60 Press Kit, February 1993. Contained in NASA Space Shuttle Launches Web site. http://www.ksc.nasa.gov/shuttle/missions/missions.html.

PAYLOAD PROFILE: IMMUNE.2/STS-63

Mission Duration: 8 days **Date:** February 3–11, 1995

Life Science Research Objectives
- To extend the study of the rat immune system conducted on STS-60

Life Science Investigations
- Immunology (IMMUNE2-1)

Organisms Flown
- *Rattus norvegicus* (rat)

Flight Hardware
- Ambient Temperature Recorder (ATR-4)
- Animal Enclosure Module (AEM)
- AEM Water Refill Box

IMMUNE.2/STS-63

Mission Overview

The STS-63 mission was launched on the Space Shuttle Discovery on February 3, 1995. The eight-day mission ended on February 11. The six-member crew included the first female pilot to fly a space mission and a mission specialist from Russia.

The primary mission objective was to perform a rendezvous and fly-around of the Russian space station Mir to verify flight techniques and communications and navigation interfaces associated with Shuttle/Mir proximity operations in preparation for the STS-71 docking mission.

Kennedy Space Center sponsored two secondary payloads on the mission: CHROMEX-06 and Biological Research in Canisters 3 (BRIC-03). NASA and the National Institutes of Health collaboratively sponsored the National Institutes of Health Cells 3 (NIH.C3) payload.

STS-63 also carried a commercial payload, IMMUNE.2, which was developed by Ames Research Center in association with Chiron Corporation in Emeryville, California, and BioServe Space Technologies, the NASA Commercial Space Center at the University of Colorado, Boulder, and Kansas State University, Manhattan.

Life Sciences Research Objectives

The IMMUNE.2 experiment was designed to extend the study of the rat immune system conducted in the IMMUNE.1 experiment flown on the STS-60 mission in 1994. The IMMUNE.1 experiment indicated that the compound polyethylene glycol-interleukin-2 (PEG-IL-2) reduced the immune system suppression that typically occurs during

space flight. The potential that PEG-IL-2 showed as an immunoregulatory agent may make it useful in therapies to treat opportunistic infections associated with AIDS and other diseases. It may also be helpful to the elderly because aging tends to increase immunosuppression. These applications present commercial opportunities for Chiron Corporation.

Life Sciences Payload

Organisms

The IMMUNE.2 experiment used 42 adult male rats (*Rattus norvegicus*) of the Sprague-Dawley strain. Twelve rats were used in the flight group, while 30 rats were used in ground control groups. Rats from the Taconic Farms Sprague-Dawley strain were used instead of the Charles River Labs CD rats used for IMMUNE.1 because the immune responses of the CD rats from Charles River Labs were not as intense as those seen in the Taconic Farms rats on earlier flights. Each rat was about six weeks old and weighed approximately 200 g at launch.

VARIABLES	Flight		
Number of Rats	12	18	12
Launch/ Recovery Stress	actual	simulated	none
G-Force	micro-G	1 G	1 G
Food Available	ad lib	ad lib	ad lib
Housing	group (6 per cage)	group (6 per cage)	group (6 per cage)
Environment	spacecraft conditions	simulated spacecraft conditions	standard lab conditions

Table 11. Flight and Control Groups for IMMUNE.2 Rodents.

Hardware

Rats were housed in Animal Enclosure Modules (AEMs). A four-channel Ambient Temperature Recorder (ATR-4) was flown along with each AEM to record cage temperatures. For general descriptions of the AEM and the ATR-4, see IMMUNE.1.

Operations

Preflight

To increase the statistical power of the experiment procedure, six more ground control subjects were used in IMMUNE.2 than had been used in IMMUNE.1 (Table 11). Of the ground control rats, 18 formed a delayed synchronous group and were housed in three AEMs within the Orbiter Environmental Simulator (OES), while 12 formed a delayed vivarium control group and were housed in two standard laboratory cages on the ground. For a general description of the OES, see IMMUNE.1.

One day before flight, either PEG-IL-2 or saline was injected into the experimental subjects subcutaneously, rather than intravenously as on IMMUNE.1. The PEG-IL-2 dosage was doubled, to compensate for the fact that rat tissue absorbs the substance more slowly when injected subcutaneously. Six of the flight rats were injected with PEG-IL-2 and

observed for one hour before being loaded into an AEM in preparation for launch. The remaining six flight rats served as flight controls and were injected with saline before being loaded into the other AEM. Six of the vivarium control rats and nine of the delayed synchronous control rats were injected with PEG-IL-2. The remaining ground control rats were injected with saline.

Inflight

The crew made daily observations of the animals through the cover of the AEM, verified that the experiment hardware was functioning normally, refilled the AEM Water Refill Box when necessary, and downlinked daily recordings of temperature data, which were used to control the OES on the ground.

Postflight

Flight rats were unloaded from the Shuttle two hours after landing. Although temperatures in the AEMs were higher than expected during the mission, ranging from 30 to 33 °C, there appeared to be no adverse effect on the health of the rats. The rats were euthanized and tissues were collected for analysis shortly afterwards. The vivarium control group was processed 24 hours later, and the delayed synchronous control group was processed 48 hours later.

Results

The results of the IMMUNE.2 experiment differed from those of IMMUNE.1 for many parameters. No differences in thymus-to-brain ratio (a measure of stress) were observed between any of the flight or control groups. The number of monocytes (a type of white blood cell) decreased in the flight animals, regardless of treatment. Bone physiology was affected quite differently than in IMMUNE.1. Femur stiffness, strength, and mineral mass was less for flight groups than for the synchronous controls. PEG-IL-2 treatment did not induce any bone effects.

PEG-IL-2 treatment was not found to be generally therapeutic in relieving the effects of space flight on the immune system. However, differences in AEM temperature, experimental protocols, and animals made it difficult to compare between flights. Highly variable physiological responses to space flight were observed between the rats of IMMUNE.1 and IMMUNE.2.

Additional Reading

NASA. STS-63 Press Kit, February 1995. Contained in NASA Space Shuttle Launches Web site. http://www.ksc.nasa.gov/shuttle/missions/missions.html.

NASA/NIH Collaborative Cell (NIH.C) Payloads

The level of collaboration between NASA and the National Institutes of Health (NIH) has increased steadily in the past few years, as the research community has begun to better understand the value of conducting life sciences investigations in the space environment. To date, NASA and NIH have made no fewer than 18 cooperative agreements. Joint space life sciences-related activities have included workshops, ground-based and flight research, and a library referencing system. At least 10 NIH institutes have participated in these projects.

A program of collaborative space flight experiments was initiated among the NASA Life Sciences Division, NIH, and the Walter Reed Army Institute of Research in 1992. All of the payloads were located in the middeck of the Shuttle. Many experiments were self-sufficient and required minimal crew attention.

Two cooperative payload series were established. The Cells (NIH.C) payloads consisted of cells maintained within a self-contained culture system. The objective of the Cells payloads was to study cellular responses to space flight. The Rodents (NIH.R) payloads studied effects of space flight on rat developmental processes.

Four Space Shuttle missions were flown with NIH.C payloads during the 1991–1995 period: STS-59 and STS-66 in 1994, and STS-63 and STS-69 in 1995.

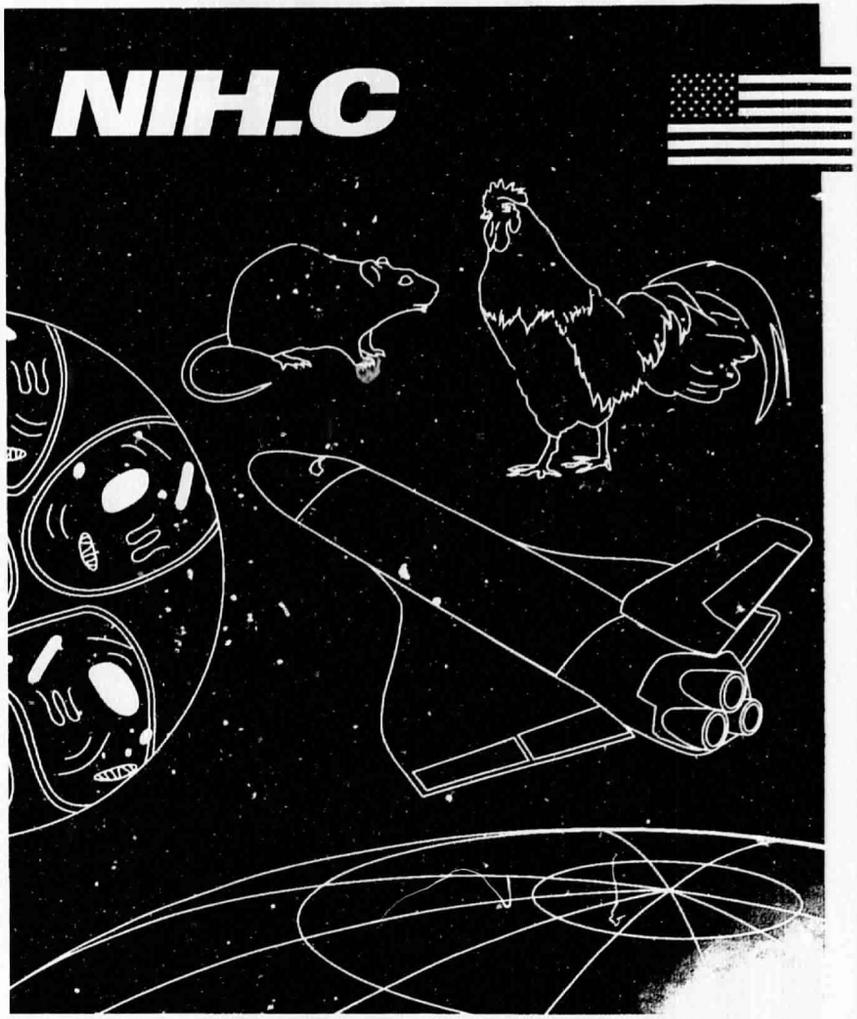

PAYLOAD PROFILE: NIH.C1/STS-59

Mission Duration: 11 days **Date:** April 9–20, 1994

Life Science Research Objectives
- To study the effect of microgravity on muscle and bone cells

Life Science Investigations
- Bone Physiology (NIH.C1-1, 2)
- Muscle Physiology (NIH.C1-3)

Organisms Studied
- *Gallus gallus* (chicken) embryonic osteoblasts
- *Rattus norvegicus* (rat) fetal osteoblasts
- *Rattus norvegicus* (rat) L8 cell line myoblasts

Flight Hardware
- Space Tissue Loss-A (STL-A) Module

National Institutes of Health Cells 1/STS-59

Mission Overview

The Space Shuttle Endeavour began its nine-day flight of the STS-59 mission on April 9, 1994, and returned to Earth on April 20. The Shuttle landed at Edwards Air Force Base, California, two days after the planned mission termination date. Six crew members flew onboard Endeavour.

The primary objective of the mission was to study global environmental changes by gathering images of the Earth from space using the Space Radar Laboratory. One of the secondary objectives was to fly the National Institutes of Health Cells 1 (NIH.C1) payload. The NIH.C1 payload was the first in a series of cooperative research initiatives among the NASA Life Sciences Division, the National Institutes of Health, and the Walter Reed Army Institute of Research. Ames Research Center managed the science on this payload. The payload is sometimes referred to as Space Tissue Loss because its objective was to assess the tissue loss induced by the microgravity environment and hardware of that name was used to conduct the experiments.

Life Sciences Research Objectives

The NIH.C1 payload was designed to investigate the growth of muscle and bone cells during space flight. Researchers hoped to reproduce and verify the observations made on previous Space Tissue Loss experiments conducted on the STS-45, STS-53, and STS-56. On those missions, exposure to microgravity was found to alter the metabolism of bone-forming cells. Previous data have also suggested that muscle cells grown in microgravity lose their ability to convert to muscle fibers. The

NIH.C1 experiments were expected to help scientists understand more about how bone loss and muscle atrophy occur both in microgravity and in special conditions on Earth, such as disease, bed rest, and aging. The objective of one experiment was to study the growth rate and protein production of bone cells when they are kept in a microgravity environment. Another experiment focused on the capacity of bone cells to differentiate (Fig. 10). The third was designed to study how muscle cells flown in space mature after they are returned to Earth.

Life Sciences Payload

Organisms

The bone cell growth rate and protein production experiment was conducted on bone-forming cells from the calvaria of 13- and 17-day-old chicken (*Gallus gallus*) embryos. The calvarium is a skull lacking facial parts and the lower jaw. The osteoblast differentiation experiment used bone-forming cells from the calvaria of fetal rats. The muscle cell experiment used myoblasts from the established L8 rat muscle cell line, rather than a primary culture.

Hardware

The experiments were conducted in the Space Tissue Loss-A (STL-A) Module. The STL-A was developed by the Walter Reed Army Institute of Research to study cells in microgravity. The module is an automated cell culture device that fits inside a Shuttle middeck locker. Three layers of impermeable material contain all fluid components. Up to four rail assemblies can be accommodated within the STL-A. Each rail assembly is physically and functionally independent and typically accommodates a single experiment. A rail has three independent pumps, which provide "feeding" (liquid nutrients), circulation, and fraction collection capabilities. Cell cultures are placed inside cartridges mounted on each rail. Temperature and other environmental parameters can be monitored. A computer system allows the STL-A to collect growth medium or cells at timed intervals, to treat cells with drugs or hormones, and to fix or preserve cells for later analysis. The STL-A performs all experiment procedures. Initial activation and monitoring to verify that the unit is performing adequately are the only inflight crew operations required.

Operations

Preflight

Fetal rat osteoblasts were cultured in petri dishes for five days and maintained in a continuous flow system for two days. Four large STL-A cartridges were injected with the rat bone cells 14 days prior to launch. Rat muscle cells were injected into six small cartridges three days before launch, and chick bone cells were similarly loaded into a total of eight large cartridges 12 and 3 days before launch. The rat bone cell cartridges were placed in one rail assembly, the rat muscle cell cartridges were placed in another, and the chick bone cell cartridges were placed in the two remaining rail assemblies of the STL-A.

Inflight

A synchronous ground control experiment was conducted, using an identically equipped STL-A.

Since the experiment hardware was fully automated, the only planned experiment operations required of the crew were to activate

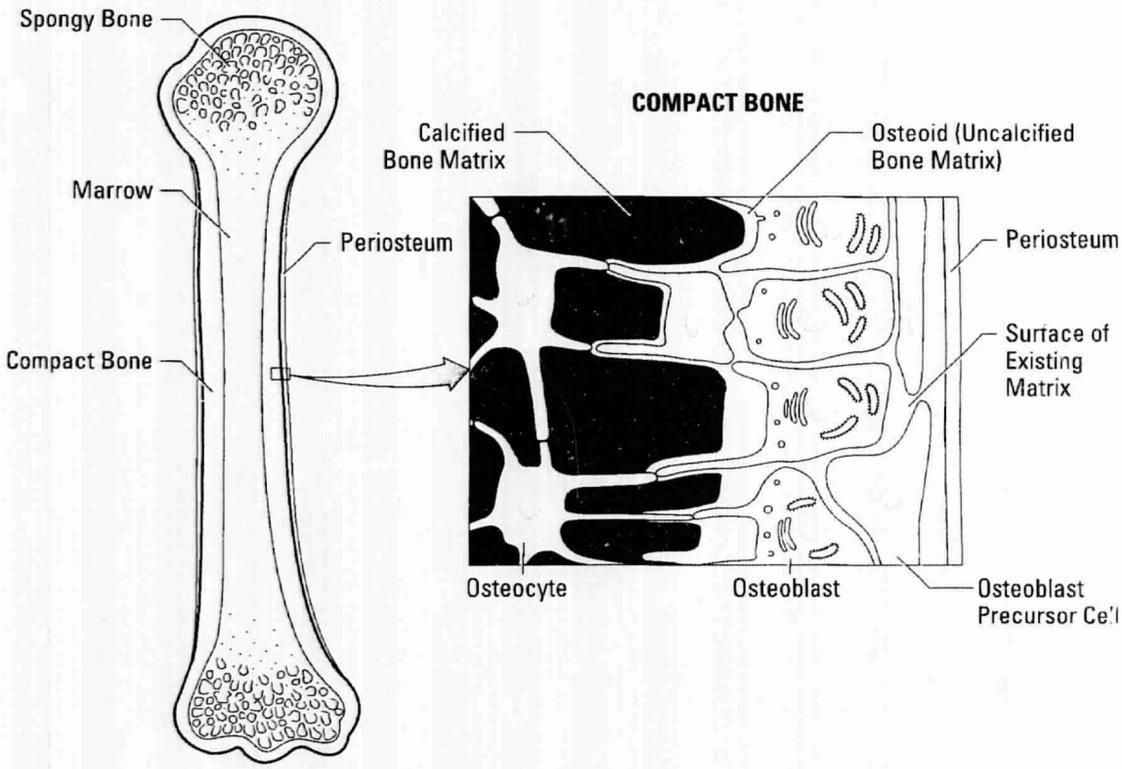

Figure 10. Osteoblasts, cells that take up calcium compounds from the blood and secrete sturdy bone matrix, live on the surface of existing matrix. Cells gradually become embedded in their own matrix, forming uncalcified matrix (osteoid). The addition of calcium phosphate forms the calcified matrix, which surrounds the mature bone cells (osteocytes).

the STL-A once the Shuttle reached orbit and to monitor the unit to verify proper functioning. The STL-A automatically collected fractions of the cultured bone cells on the third and sixth days of flight. An unexpected two-day extension of the flight required the crew to add media to the STL-A.

Rat Fetal Osteoblast Study

Space flight led to an apparent reduction in glucose consumption and lactate production, and it may have caused decreased secretory activity of the rat osteoblasts. These responses may have been caused either by accelerated aging of the cultures or by inhibition of progressive differentiation.

Postflight

Flight cartridges containing cells were recovered within four hours after landing. Some of the cells were fixed for histological analyses and others were photographed and then frozen. Fungal contamination was found in the rat myoblast cell cultures from the flight STL-A.

Results

Despite several technical problems during the flight, including contamination of the cultures, leaky fraction collections, and extension of the flight duration, some intriguing data were still obtained.

Chicken Embryonic Osteoblast Study

As compared to ground control cells, flight cells showed a possible one-third to one-half reduction in total RNA. Reduced gene expression for several proteins important in mineralization was also observed.

Rat L8 Myoblast Cell Study

Although the ground control STL-A contained large numbers of viable rat myoblasts, no viable cultures of the flight rat myoblasts were available for analysis because of fungal contamination.

Additional Reading

NASA. NASA and NIH Ready for First Joint Science Flight. NASA Press Release 94-055, March 31, 1994. Contained in NASA News Releases Web site. http://www.nasa.gov/ releases/index.html.

NASA. STS-59 Press Kit, April 1994. Contained in NASA Space Shuttle Launches Web site. http://www.ksc.nasa.gov/shuttle/missions/missions.html.

PAYLOAD PROFILE: NIH.C2/STS-66

Mission Duration: 11 days **Date:** November 3–14, 1994

Life Science Research Objectives
- To study the effect of microgravity on muscle and cartilage cells

Life Science Investigations
- Bone Physiology (NIH.C2-1)
- Muscle Physiology (NIH.C2-2)

Organisms Studied
- *Gallus gallus* (chicken) embryonic muscle cells
- *Gallus gallus* (chicken) embryonic cartilage cells

Flight Hardware
- Space Tissue Loss-A (STL-A) Module

National Institutes of Health Cells 2/STS-66

Mission Overview

The STS-66 mission was launched on the Space Shuttle Atlantis on November 3, 1994. The mission terminated after 11 days, with the landing of Atlantis at Edwards Air Force Base, California, on November 14. Atlantis carried a crew of six, including an astronaut from the European Space Agency.

The primary mission objectives were to fly the Atmospheric Laboratory for Applications and Science (ATLAS-3) payload, designed to study the effect of solar energy on the Earth's climate, and to deploy and retrieve an astronomy satellite.

The secondary objectives included flying two experiment payloads that were collaboratively sponsored by the NASA Life Sciences Division and the National Institutes of Health (NIH): the Rodents 1 (NIH.R1) payload, and the Cells 2 (NIH.C2) payload. The NIH.C2 payload contained two joint NIH/NASA-sponsored experiments and used hardware developed by Walter Reed Army Institute. Ames Research Center managed the science.

Life Sciences Research Objectives

The NIH.C2 payload continued the research into bone and muscle growth in microgravity begun on NIH.C1. The NIH.C2 experiments were designed to study the effect of space flight on muscle and cartilage cells. One experiment sought to determine whether space flight induces damage or atrophy in myofibers (Fig. 11). The other experiment examined the effect of microgravity on mineral and bone.

Life Sciences Payload

Organisms

Muscle and cartilage cells from white leghorn chicken embryos were used in the experiments. Muscle cells were cultured as organoids, containing myofibers and connective tissue fibroblasts. Cartilage cells were cultured in micromass conditions (high density).

Hardware

Cell cultures were contained in the Space Tissue Loss-A (STL-A) Module. For a general description of the STL-A, see NIH.C1.

Operations

Preflight

Cell preparations for the NIH.C2 experiments were initiated two weeks before the launch, in the investigators' laboratories. The cells were loaded into cartridges, sealed, and hand-carried to Kennedy Space Center. Cartilage cell cultures, placed in six small cartridges, were loaded into two rail assemblies of the STL-A three days before launch. Muscle organoid cultures, placed in large cartridges, were loaded into the other two rail assemblies of the STL-A two days before launch.

Inflight

A synchronous control experiment was conducted, using an identically equipped STL-A. Basal control cell samples for the experiments were harvested on the ground at the time of launch. The automated hardware fixed samples from the flight bone and muscle cell cultures during the flight.

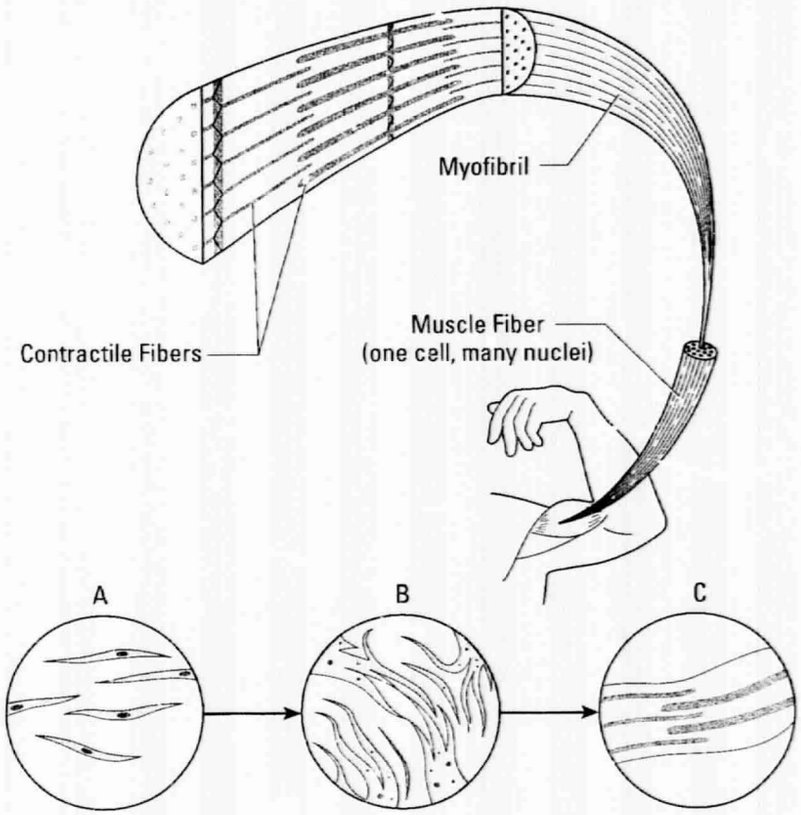

Figure 11. Skeletal muscles move by contracting. Each muscle is composed of tightly packed bundles of muscle fibers, each containing proteins, which are responsible for muscle movement. Differentiation of muscle cells begins early in embryonic development. Myoblasts (A), the precursors of skeletal muscle cells, fuse together (B) to form multinucleated cells, which eventually develop into myofibrils containing contractile fibers (C).

A Cell Culture Model for Space Life Sciences Research
Interview with Herman Vandenburgh

Herman Vandenburgh received his doctorate degree in neuroanatomy from the University of Pennsylvania and began his career working for the National Institutes of Health. In 1981, he moved to Brown University, where he remains today as a professor of pathology. His main research interest is a field called mechano-transduction.

As he explains it, "We try to understand how cells sense mechanical force and respond to that force. We want to know what sort of second messenger signals are generated inside the cell to tell the cell if it's being exercised and needs to grow, or needs to change its metabolic characteristics. Or if it's not being used, what are the signals that tell the cell that it doesn't need to be so big, so it wastes away or atrophies?" These questions led him to an interest in space biology, where many of the same questions are asked.

For Vandenburgh, the primary goal of his space research is developing pharmaceutical countermeasures to prevent the muscle wasting that occurs in space, "helping man explore a new environment, and a very hostile environment at that." His research group has developed a tissue culture system for preliminary tests of these countermeasures. "It's really the classical way of doing these types of experiments," he said, "You first test out new drugs in tissue culture, on cells outside the body, and then the next set of experiments are in animals. You hope you see a similar type of effect as you saw in cell culture. Then you go from animal to human. At each stage you have to hope that what happens early on is going to follow through. It's much more difficult to predict what's going to happen if you go right into doing animal studies."

Up to now, he has focused on establishing muscle tissue culture as an appropriate model system. "Our main finding is that muscle cells outside of the body do atrophy, or waste away in a similar manner to what happens in animals and in humans. So we've established that it's a good model system for looking at how we might be able to prevent that wasting or atrophy from occurring. The reason that the muscle cells waste away in space is due to a decrease in the rate at which new proteins are being made in the muscle cells."

These findings help dispel the controversy over whether individual cells are massive enough to be affected by microgravity. As Vandenburgh explained, "I think most of the people who say that the force is minimal and that single cells shouldn't see gravitational effects are missing the time factor. Over a week or two weeks or three weeks in a different gravitational force, the proteins in the cell are being broken down and new proteins are being synthesized and being assembled into the cytoskeleton, into the nuclear proteins, into mitochondria. I think it's that time element that is important when you consider how cells respond to a gravitational force. The evidence is pretty good that the assembly of a lot of proteins can be affected by very small mechanical forces, certainly on the order of what we see with going from 1 G to microgravity."

The International Space Station will offer cell researchers an opportunity for more long-term experiments. Vandenburgh is part of the working group developing the Cell Culture Unit for the Station. "Hopefully when it's completed," he said, "We will be able to do automated cell culture experiments on the order of 30 to 60 days, or even 90 days in some cases. You'll really be able to see the long-term effects of microgravity. Another huge advantage of the Station is that there will be a centrifuge that you'll be able to put a Cell Culture Unit on and have a 1-G control. There you can really say that whatever effects you're seeing in space are due to differences in gravitational force, and not other factors."

Postflight

Because of poor weather at Kennedy Space Center, landing was diverted to Edwards Air Force Base. One cartridge from each of the experiments was fixed postflight. Ground control and flight hardware units were opened shortly after landing. No contamination was detected, in either the flight or the ground control cells. Samples were packed and shipped back to the investigators' laboratories.

Results

Chick Embryonic Muscle Cell Study

Flight and control muscle cultures exhibited similar rates of cellular metabolism that increased linearly throughout the flight. The rates of total muscle degradation were not significantly different for the two groups. However, protein synthesis rates were decreased in flight cultures on day nine. After return to Earth, protein synthesis rates in the flight cultures rapidly elevated to ground control levels. Compared to ground controls, mean myofiber size in flight cultures was significantly decreased (atrophied).

Chicken Embryonic Cartilage Cell Study

Cartilage cells maintained their integrity during flight and produced matrix. In all flight and ground control samples, the degree of cellular differentiation was reduced because of the different growth dynamics that occurred in the STL-A chambers compared to growth in a petri dish. The microscopy results showed some indications that flight cells may not have been as functionally mature as ground controls.

Additional Reading

NASA. STS-66 Press Kit, November 1994. Contained in NASA Space Shuttle Launches Web site. http://www.ksc.nasa.gov/shuttle/missions/missions.html.

Vandenburgh, H., J. Chromiak, J. Shansky, M. Del Tatto, and J. Lemaire. Space Travel Directly Induces Skeletal Muscle Atrophy. *FASEB Journal*, vol. 13(9), 1999, pp. 1031–1038.

PAYLOAD PROFILE: NIH.C3/STS-63

Mission Duration: 8 days **Date:** February 3–11, 1995

Life Science Research Objectives
- To study the effect of microgravity on bone and muscle cells

Life Science Investigations
- Bone Physiology (NIH.C3-1, 2)
- Muscle Physiology (NIH.C3-3)

Organisms Studied
- *Gallus gallus* (chicken) embryonic osteoblasts
- *Rattus norvegicus* (rat) fetal osteoblasts
- *Rattus norvegicus* (rat) L8 myoblast cells

Flight Hardware
- Space Tissue Loss-A (STL-A) Module

National Institutes of Health Cells 3/STS-63

Mission Overview

The STS-63 mission was launched on the Space Shuttle Discovery on February 3, 1995. The eight-day mission ended on February 11. STS-63 was the third flight of SPACEHAB. The six-member crew included the first female pilot to fly a space mission and a mission specialist from Russia.

The primary mission objective was to perform a rendezvous and fly-around of the Russian space station Mir to verify flight techniques, communications and navigation aid sensor interfaces, and engineering analyses associated with Shuttle/Mir proximity operations in preparation for the STS-71 docking mission. Kennedy Space Center sponsored two secondary payloads, called CHROMEX-06 and Biological Research in Canisters 3 (BRIC-03) on the mission. STS-63 also carried a commercial payload named IMMUNE.2 that was developed by Ames Research Center. The NASA Life Sciences Division and the National Institutes of Health collaboratively sponsored the National Institutes of Health Cells 3 (NIH.C3) payload, which included three experiments. The Walter Reed Army Institute provided the hardware and payload management.

Life Sciences Research Objectives

The objective of the NIH.C3 payload was to continue the muscle and bone cell experiments in the NIH.C1 payload, which flew on the STS-59 mission in April 1994. (For a description, see NIH.C1.) One experiment sought to determine if exposure to low gravity levels affected the growth rate and protein production of bone cells. The other bone physiology

experiment was designed to study the effect microgravity might have on the capacity of bone cells to differentiate. The third experiment examined how cells that form muscle respond to space flight.

Life Sciences Payload

Organisms

The bone cell growth rate and protein production experiment was conducted on cultures of bone-forming cells from the calvaria of 16-day-old chick embryos. The calvarium is a skull lacking facial parts and the lower jaw. The osteoblast differentiation experiment used bone-forming cells from the calvaria of fetal rats. The muscle cell experiment used muscle cells from the L8 rat myoblast line.

Hardware

The three experiments in the NIH.C3 payload were carried in the Space Tissue Loss-A (STL-A) Module. For a general description of the STL-A, see NIH.C1.

Operations

Preflight

To ensure the acquisition of high-quality data, several changes were made in the methodology used in the original NIH.C1 experiments. Procedures for preparing and isolating cells were modified, and stringent precautions were adopted to prevent culture contamination. Preparations for the NIH.C3 flight experiments began several weeks before launch, with cells grown, harvested, and examined thoroughly for contamination. For each experiment, four large STL-A cartridges were inoculated with cells and placed in a rail assembly of the module. Cartridges were inoculated with embryonic chick cells 13 days before launch, with fetal rat cells eight days before launch, and with rat L8 cells three days before launch.

Inflight

A synchronous ground control experiment was conducted, using an identically equipped STL-A. Baseline control data for the NIH.C3 experiment were obtained from cell cultures processed on the ground immediately after launch.

The crew monitored the control cells in the incubator for growth, contamination, and fusing. The STL-A automatically collected and stored samples of cells at 48-hour intervals during the mission.

Postflight

The ground control and flight units were opened shortly after landing. Bacterial contamination was found in one-half of the flight and one-fourth of the ground fetal rat bone cell cultures.

Results

Chicken Embryonic Osteoblast Study

Differences between metabolism of basal cells and that of either flight or control cells were interpreted as a possible effect induced by the feeding regime in the STL-A. As in the corresponding NIH.C1 experiment, a reduced expression of the genes for collagen and osteocalcin (a calcium-binding bone protein) during space flight was observed.

Rat Fetal Osteoblast Study

The results from the cell differentiation experiment using rat osteoblasts were compromised by the bacterial contamination.

Rat L8 Myoblast Cell Study

Space flight significantly decreased the ability of the L8 cells to fuse and differentiate into myotubules.

Additional Reading

NASA. STS-63 Press Kit, February 1995. Contained in NASA Space Shuttle Launches Web site. http://www.ksc.nasa.gov/shuttle/missions/missions.html.

PAYLOAD PROFILE: NIH.C4/STS-69

Mission Duration: 11 days **Date:** September 7–18, 1995

Life Science Research Objectives
- To study the effect of microgravity on bone cells

Life Science Investigations
- Bone Physiology (NIH.C4-1, 2)

Organisms Studied
- *Rattus norvegicus* (rat) ROS osteoblast cell line
- *Homo sapiens* (human) fetal osteoblasts (hFOB cells)

Flight Hardware
- Space Tissue Loss-A (STL-A) Module

National Institutes of Health Cells 4/STS-69

Mission Overview

The STS-69 mission was launched on the Space Shuttle Endeavor on September 7, 1995. Endeavor, with its five-member crew, landed on September 18 after 11 days in Earth orbit.

The primary mission objectives were to deploy, operate, and retrieve the second Wake Shield Facility for materials processing and to fly the Shuttle Pointed Autonomous Research Tool for Astronomy (SPARTAN 201-03) used to study the sun.

One of the secondary objectives was to fly the Biological Research in Canisters 6 (BRIC-06) payload, sponsored by Kennedy Space Center. NASA Life Sciences Division and the National Institutes of Health collaboratively sponsored the National Institutes of Health Cells 4 payload (NIH.C4), the fourth in a series of cell culture payloads. The Walter Reed Army Institute provided the hardware and payload management, and Ames Research Center managed the payload science.

Life Sciences Research Objectives

The two experiments included in the NIH.C4 payload examined the effects of microgravity on bone cells. The objective of one experiment was to determine if space flight causes changes in the osteoblast consistent with a reduction in bone formation and an increase in bone resorption. The objective of the other experiment was to study the effect of space flight on bone cell formation and loss by determining whether microgravity reduces gene expression and whether this process returns to normal soon after return to Earth.

Life Sciences Payload

Organisms

Cultured osteoblasts from the ROS cell line (*Rattus norvegicus*) were studied in the bone formation and resorption experiment, and a newly developed line of immortalized human fetal osteoblasts (hFOB) was studied in the gene expression experiment.

Hardware

Cultures were contained in the Space Tissue Loss-A Module. For a general description of the STL-A, see NIH C.1.

Operations

Preflight

Cell cultures were initiated several weeks before launch. The hFOB cells were incubated with microcarrier beads, then transferred to petri dishes to grow until two days prior to launch. They were then transferred to four large cartridges and placed in one rail assembly of the STL-A. The ROS osteoblasts were also loaded into 12 small cartridges and placed in two rail assemblies of the STL-A two days before launch.

Inflight

The STL-A continuously recorded the average temperature in the rail assemblies holding the culture samples. Media was automatically recirculated through the pump, oxygenator, and cartridges throughout the flight. For the hFOB cells, periodic media sampling was followed by fraction fixation. No manual operations were performed.

A synchronous ground control experiment was conducted, using an identically equipped STL-A.

Postflight

The sample cartridges were removed from the ground control modules and processed one hour after landing. The flight unit was processed two hours later. Postflight processing included sampling of media and isolation of nucleic acids. No visible signs of contamination were found. The fraction collections and all but one of the fixations occurred as planned in the flight unit.

Results

Rat Osteoblast Study

Microscopic examination of the carrier beads indicated that a loss of cells occurred early after inoculation into cartridges in flight and ground samples alike, apparently followed by slow recovery and growth. No gross differences were found in cell shape between flight and ground samples.

Human Fetal Osteoblast Study

Both flight and ground controls used glucose at a steady and nearly identical rate. The rates of collagen accumulation in flight and control cells were indistinguishable, consistent with similar rates of collagenous matrix production. The level of Transforming Growth Factor-ß2 (TGF-ß2) and TGF-ß1 mRNA decreased slightly in flight cells compared to ground controls. Both glucose uptake and TGF-ß gene expression increased after 24 hours postflight.

Additional Reading

NASA. STS-69 Press Kit, August 1995. Contained in NASA Space Shuttle Launches Web site. http://www.ksc.nasa.gov/shuttle/missions/missions.html.

Page intentionally left blank

NASA/NIH Collaborative Rodent (NIH.R) Payloads

The level of collaboration between NASA and the National Institutes of Health (NIH) has increased steadily in the past few years, as the research community has begun to better understand the value of conducting life sciences investigations in the space environment. To date, NASA and NIH have established no fewer than 18 cooperative agreements. Joint space life sciences-related activities have included workshops, ground-based and flight research, and a library referencing system. At least 10 NIH institutes have participated in these projects.

Two cooperative payload series were established. The Rodents (NIH.R) payloads studied the effects of space flight on rat developmental processes. Prior to the NIH.R payloads, early mammalian development had been studied in space only once, on the five-day Cosmos 1514 biosatellite mission flown by the U.S.S.R. in 1983. The Cells (NIH.C) payloads studied cellular responses to space flight.

Within these two payload programs, six payloads, which flew on five Shuttle missions, were sponsored in the 1991–1995 period. All of the payloads were located in the middeck of the Shuttle and many were self-sufficient, requiring minimal crew attention.

NIH.R payloads were flown on STS-66 in 1994, and STS-70 in 1995.

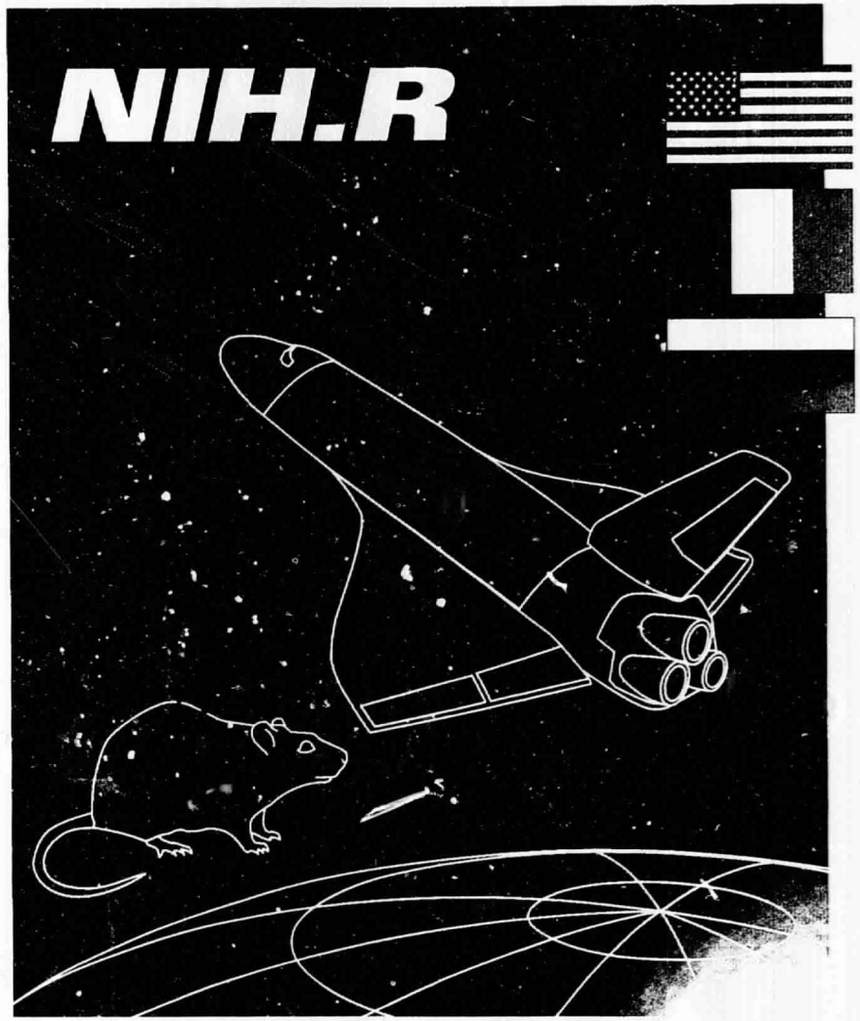

PAYLOAD PROFILE: NIH.R1/STS-66

Mission Duration: 11 days **Date:** November 3–14, 1994

Life Science Research Objectives
- To study the role of gravity in developmental processes of the rat

Life Science Investigations
- Bone Physiology (NIH.R1-1, 2)
- Developmental Biology (NIH.R1-3, 4, 5, 6)
- Immunology (NIH.R1-7)
- Metabolism and Nutrition (NIH.R1-8)
- Muscle Physiology (NIH.R1-9)
- Neurophysiology (NIH.R1-10, 11, 12, 13)

Organisms Studied
- *Rattus norvegicus* (rat), pregnant

Flight Hardware
- Ambient Temperature Recorder (ATR-4)
- Animal Enclosure Module (AEM)
- AEM Water Refill Box

National Institutes of Health Rodents 1/ STS-66

Mission Overview

The STS-66 mission was launched on the Space Shuttle Atlantis on November 3, 1994. The mission terminated after 11 days, with the landing of Atlantis at Edwards Air Force Base, California on November 14. Atlantis carried a crew of six, including an astronaut from the European Space Agency.

The primary mission objectives were to conduct the experiments in NASA's Atmospheric Laboratory for Applications and Science (ATLAS-3) payload and to deploy and retrieve an astronomy satellite. The secondary objectives included flying two experiment payloads that were jointly sponsored by the NASA Life Sciences Division and the National Institutes of Health (NIH). The Rodents 1 (NIH.R1) payload included 11 experiments conducted by scientists from the U.S., France, and Russia. Ames Research Center managed these experiments.

Life Sciences Research Objectives

The objective of the experiments in the NIH.R1 payload was to investigate the role of gravity in developmental processes. By conducting the NIH.R1 experiments, scientists hoped to better understand female physiology and reproductive biology, as well as the early development of skin and the musculoskeletal, cardiovascular, nervous, immune, and circadian timing systems. Such knowledge may be applied towards preventing or treating human developmental problems, such as premature births and birth defects.

Life Sciences Payload

Organisms

Fifty-four nulliparous pregnant female rats (*Rattus norvegicus*) belonging to the Sprague-Dawley strain were the subjects for the NIH.R1 studies. A nulliparous animal is one that has never borne offspring. Ten rats were used in the flight group, while 44 rats were used in ground control groups. At launch, the rats were in their ninth gestational day.

Hardware

Rats were housed in Animal Enclosure Modules (AEMs). The AEM is a self-contained rodent habitat, storable in a Shuttle middeck locker, which provides ventilation, lighting, food, and water for a maximum number of six adult rats. Fans inside the AEM circulate air through the cage and passively control the temperature. A filtering system controls waste products and odors. Although the AEM does not allow handling of animals, a clear plastic window on the top of the unit permits viewing or video recording. A Water Refill Box, used on AEM flights of more than five days, is used to replenish water inflight.

An Ambient Temperature Recorder (ATR-4) accompanied each AEM. The ATR-4 is a self-contained, battery-powered package that can record up to four channels of temperature data.

Operations

Preflight

Rats were shipped to Kennedy Space Center on the second day of their gestational period and placed in standard vivarium cages. Body weights and food and water consumption rates were recorded until the seventh day of gestation. On the seventh day, a laparotomy was performed on several rats to confirm pregnancies and to determine the number of fetal implantation sites. A laparotomy is a surgical procedure in which an abdominal incision is made to expose the gravid uterus. The swellings on the uterus indicate the number of implantation sites and can be counted before the incision is closed. Ten dams, each with at least five implantation sites per uterine horn, were selected for flight. These rats were loaded into two AEMs on gestation day eight, and the AEMs were then placed in the middeck of the Shuttle.

Inflight

The delayed synchronous control group was treated in a manner identical to the flight animals, following a 24-hour delay (Table 12). The group was housed in AEMs within the Orbiter Environmental Simulator (OES). The OES is a modified environmental chamber at Kennedy Space Center whose temperature, humidity, and CO_2 level are electronically controlled based on downlinked environmental data from the orbiter. Thus the animals within the chamber are exposed to environmental conditions that are similar to those experienced by the flight group during the mission. The rats in the vivarium control groups were individually housed in standard vivarium cages. Vivarium control animals did not undergo laparotomies, as the rats in the flight and delayed synchronous control groups did.

The light cycle inside the AEMs was programmed to 12 hours of light alternating with 12 hours of darkness. The crew made observations and briefly videotaped the flight rats daily, maintained written records of animal health, and verified proper function of the experiment hardware.

Rodent Development in Microgravity

Interview with Jeffrey Alberts

Jeffrey Alberts is a neuroscientist and animal behaviorist at Indiana University. His introduction to space life sciences research began with a phone call from Dr. Richard Keefe, a rat development specialist working on the U.S. portion of the Soviet Cosmos 1514 biosatellite mission. The Soviets were looking for an American investigator with Alberts' background to join in planning the mission, which would fly in 1983. "He [Keefe] became my space biology mentor," said Dr. Alberts, "We started working together, and he started teaching me over the telephone the fundamentals of space and gravitational biology. Two years later we met in the flesh for the first time on the way to Moscow." After the Cosmos experience, Alberts said, "I caught the space biology bug." Alberts has gone on to be an investigator on the NIH.R1, R2, and Neurolab missions.

"Personally," he said, "I'm interested in basic and fundamental questions about whether and how gravity is expressed in our bodies and our behavior. As an academic, I think that these are really profound and deep questions: whether, to what extent, and how the forces of gravity are directly and indirectly part of our biological heritage; to what extent and in what ways did they make the living world look the way it looks and act the way it acts, right now. One of the most powerful tools science has to answer questions like that is to ask what goes on in the absence of whatever variable you're talking about. And gravity is a variable that can't be absent anywhere on Earth. So the only way to approximate an answer in a meaningful way is probably orbital space flight."

Alberts sees the Cosmos 1514 mission as an important milestone in studying animal development in space. "1514 demonstrated that the mammalian reproductive system, namely rat pregnancy, can proceed in the absence of gravitational forces. This allowed NIH and NASA to say, 'Wouldn't it be exciting to do something like this?'"

The experimental design changed a great deal between Cosmos 1514 and the NIH.R missions. "On R1 and R2, we had an extraordinarily elegant design, R1 especially: laparotomies, unilateral hysterectomies. We had within-mother controls, so we had impressive statistical power. It was a longer flight, going much closer to birth than on Cosmos. The fact that we could get these animals right off the Shuttle and into the lab was also profoundly important. In 1514, the animals were back on Earth about as long as they had been in space before they delivered their pups. By the time we got our hands on the babies, what we were looking at was readapting animals who had survived micro-G exposure.

"What was nice about R1 and R2," Alberts continued, "was how quickly some of the investigators got their tissues. On R1, we still were working with postnatal rats, but only about 48 hours after landing. But on R2, we had animals in the lab, living fetuses which, two or three hours earlier, had been in orbital flight. This was as close as you can get to performing an experiment in space."

There is still much to be learned in the area of animal development in microgravity. Besides reinforcement and expansion of the data already collected, "We know nothing about the effects of micro-G before embryonic day 8, or cumulative effects that would be expressed if you started earlier or went longer," said Alberts, "We've never done anything on proprioception, on the animal's spatial learning or social behavior." Alberts has been working on the design for the Advanced Animal Habitat for the International Space Station. "For many of us, the dream is to do multigenerational studies in microgravity. The truth is, that will take longer than a single Space Station increment, so it's not going to be done right away. But it can be done."

Postflight

Flight rats were removed from the Shuttle within two hours of landing. After a veterinarian performed a health check on the rats, they were transferred to a surgical facility, where each rat underwent a unilateral hysterectomy. Rat dams were videotaped continuously, including during labor and delivery.

Twelve of the vivarium control rats underwent unilateral hysterectomies at the same time as the flight rats did. The remaining 12 vivarium control rats were not hysterectomized. The rats in the delayed synchronous control group underwent unilateral hysterectomies 24 hours later.

The rats gave birth naturally a few days after the mission had ended. Two flight animals had to undergo Caesarean delivery. By performing unilateral hysterectomies on the dams and then allowing them to deliver naturally, scientists were able to obtain both a prenatal and a postnatal sample of offspring from the same pregnant rats. Dams in all experimental groups were euthanized shortly after giving birth. Pups were transferred to foster dams for nursing. During their development, pups were subjected to a variety of tests to assess the ongoing impact of space flight on neurovestibular development.

VARIABLES	Flight	24-Hour Delayed Synchronous Control	Vivarium Control	24-Hour Standard Vivarium Control
Number of Rats	10	10	24	10
Launch/ Recovery Stress	actual	none	none	none
Gravitational Force	micro-G	1 G	1 G	1 G
Food Available	ad lib	ad lib	ad lib	ad lib
Housing	group (5 per cage)	group (5 per cage)	single	single
Environment	spacecraft conditions	simulated spacecraft conditions	standard lab conditions	standard lab conditions

Table 12. Flight and Control Groups for NIH.R1 Rodents.

Results

Flight dams had uncomplicated, successful vaginal deliveries and litter sizes similar to those of control dams. However, the flight dams did have a significant increase in the number of lordosis labor contractions, most likely related to space flight muscle atrophy. Flight pups showed no difference in their righting response, indicating that the ability to orient themselves with respect to gravity was retained, despite exposure to microgravity during the latter half of gestation.

No evidence of somatic growth retardation was seen in the flight pups. In fact, development of the fetal epidermis was more advanced in flight pups than in the ground controls. Neural connections between the eye and brain seemed to develop normally in

weightlessness, as did the normal proprioceptive structures when the animals grew to adulthood on Earth. Responses of the immune system to microgravity were shown to differ with age of the experimental subject; overall, there appeared to be no general effect of space flight on the immune response, but specific components of the immune response were affected differently in dams and in pups.

Muscle and bone atrophy was observed in the adult flight animals. This atrophy included a lack of connective tissue formation between the muscles and bone loss adjacent to the attachments of load-bearing muscles, such as the soleus.

Additional Reading

NASA. STS-66 Press Kit, November 1994. Contained in NASA Space Shuttle Launches Web site. http://www.ksc.nasa.gov/shuttle/missions/missions.html.

PAYLOAD PROFILE: NIH.R2/STS-70

Mission Duration: 10 days **Date:** July 13–22, 1995

Life Science Research Objectives

- To study the effects of microgravity on development of rat musculoskeletal, nervous, and circadian timing systems
- To study alterations in rat behavior in microgravity

Life Science Investigations

- Bone Physiology (NIH.R2-1)
- Cardiovascular Physiology (NIH.R2-2)
- Chronobiology (NIH.R2-3)
- Developmental Biology (NIH.R2-4)
- Muscle Physiology (NIH.R2-5, 6)

Organisms Studied

- *Rattus norvegicus* (rat), pregnant

Flight Hardware

- Ambient Temperature Recorder (ATR-4)
- Animal Enclosure Module (AEM)
- AEM Water Refill Box

National Institutes of Health Rodents 2/ STS-70

Mission Overview

The STS-70 mission was launched on the Space Shuttle Discovery on July 13, 1995. The Shuttle landed on July 22 after a flight that lasted nearly nine days. There were five crew members on board the Shuttle.

The primary objective of the mission was to deploy NASA's Tracking and Data Relay Satellite G, which provides communications, tracking, telemetry, data acquisition, and command services for the Space Shuttle. Several secondary objectives were also accomplished on the mission. One of these was to fly the Biological Research in Canisters 4 and 5 (BRIC-04 and BRIC-05) payloads sponsored by Kennedy Space Center.

Another secondary payload on the mission was the National Institutes of Health Rodents 2 (NIH.R2), the second in a series of developmental biology payloads sponsored by the NASA Life Sciences Division and the NIH. Four scientists from the U.S. and one from Canada conducted experiments as part of the NIH.R2 payload. Ames Research Center managed these experiments.

Life Sciences Research Objectives

The NIH.R2 payload was designed to examine how microgravity can alter anatomical and physiological development in rodents. Five experiments were conducted on rats to study behavioral changes and the development of muscle, bone, nervous, and circadian timing systems. Development of vestibular structures, muscle fibers, circadian timing systems, and skeletal structures all begin before birth. By study-

ing these systems and structures in rat pups that had developed in microgravity, scientists hoped to determine the role of gravity in several areas of mammalian development.

Life Sciences Payload

Organisms

Fifty nulliparous pregnant rats (*Rattus norvegicus*) belonging to the Sprague-Dawley strain were used in the NIH.R2 experiments. A nulliparous animal is one that has never borne offspring. Ten rats were used in the flight group, while 40 were used in ground control groups. At the time of launch, each rat weighed about 225 g and was in gestation day 11.

Hardware

Rats were housed in Animal Enclosure Modules (AEMs). An Ambient Temperature Recorder (ATR-4) accompanied each AEM. For a general description of the AEM and the ATR-4, see NIH.R1.

Operations

Preflight

About four days before launch, laparotomies were performed on a group of rats to verify pregnancies and to determine the number of implantation sites in each rat. A laparotomy is a surgical procedure in which an abdominal incision is made to expose the gravid uterus. The swellings on the uterus indicate the number of implantation sites and can be counted before the incision is closed. Only dams with 10 or more implantation sites were selected for the flight and control experiments.

Inflight

A basal control group of rats was dissected immediately after launch to collect baseline physiological data (Table 13). Two vivarium ground control groups were individually housed in vivarium cages; one group was 48 hours delayed. Rats in one vivarium group were laparotomized on the seventh day of gestation, while rats in the 48-hour delayed vivarium group were not laparotomized. A final ground control group, the 48-hour delayed synchronous group, was housed in AEMs in the Orbiter Environmental Simulator (OES). For a general description of the OES, see NIH.R1. All procedures performed on the flight group were performed on the delayed synchronous AEM ground control group 48 hours later.

During the flight, the rats had free access to food and water. The light cycle in the cages was set to 12 hours of light alternating with 12 hours of darkness. In keeping with the requirements of the circadian rhythm experiment, light intensity during the light phase was maintained at a minimum of 100 lux. During the dark phase, the light level was less than one lux of red light.

The crew made daily observations of the animals, verified that the experiment hardware was functioning properly, and downlinked daily recordings of temperature data used to control the OES on the ground. To provide data for the behavioral study, the crew videotaped the animals briefly each day.

Postflight

Postflight activities were interrupted by a hurricane that forced evacuation of the entire Kennedy Space Center to mainland shelters. Because of the evacuation, dissection of rat pups on the seventh post-

VARIABLES	Flight				
Number of Rats	10	10	10	10	10
Launch/ Recovery Stress	actual	none	none	none	none
Gravitational Force	micro-G	1 G	1 G	1 G	1 G
Food Available	ad lib	ad lib	ad lib	ad lib	ad lib
Housing	group (5 per cage)	single	group (5 per cage)	single	single
Environment	spacecraft conditions	standard lab conditions	simulated spacecraft conditions	standard lab conditions	standard lab conditions

Table 13. Flight and Control Groups for NIH.R2 Rodents.

flight day had to be postponed by one day. Experiment activities resumed after personnel returned to Kennedy Space Center.

Immediately after landing, four of the flight dams and four of the vivarium control dams were euthanized and dissected to provide tissues for analysis. The remaining flight and control dams were allowed to carry their fetuses to term in vivarium cages. All dams gave birth naturally by the twenty-third day of gestation, except one, whose pups were delivered by Caesarean section. Two hours after giving birth, each of the dams was dissected and tissue samples were analyzed. The pups were tattooed shortly after birth for identification purposes. They were nursed by foster dams and examined periodically during their development. On the seventh or eighth postnatal day, rat pups were implanted with microchips so that they could be identified after growth of fur. To allow examination of the development process, rat pups at various ages were euthanized and their tissues were analyzed.

The rats in the delayed synchronous control groups were treated in a manner identical to the flight group, but after a 48-hour delay.

Results

Space flight did not affect the gross overall health or weight of the flight dams. Pups were delivered at the expected time and, as observed after NIH.R1, flight dams had uncomplicated, successful vaginal deliver-

ies. As in NIH.R1, litter sizes of flight dams were similar to those of control dams. However, the flight dams did have a significant increase in the number of lordosis labor contractions, most likely related to space flight muscle atrophy. Flight pups showed no difference in their righting response, indicating that the ability to orient themselves with respect to gravity was retained, despite exposure to microgravity during the latter half of gestation.

Differences in the presence of several substances crucial to bone formation were found to be minimal between flight and control animals. Calvariae thickness was also similar in flight and control animals. Hypertrophy of a chest muscle utilized in crawling was increased in the flight rats that were group housed compared to the vivarium ground control rats that were housed individually in vivarium cages.

Both flight and control pups showed circadian rhythms of temperature and activity increasing in amplitude as the pups matured. The phase of rhythms was earlier in the flight rats than in the control rats.

Additional Reading

Dumars, P., C. Elland, K. Hinds, C. Katen, T. Schnepp, and D. Reiss-Bubenheim. National Institutes of Health. Rodent 2 (NIH.R2): Study of the Effect of Microgravity on the Development of Rats, a Collaborative Series with NASA and NIH (abstract). *Gravitational Space and Biology Bulletin*, vol. 10 (1), October 1996.

NASA. STS-70 Press Kit, July 1995. Contained in NASA Space Shuttle Launches Web site. http://www.ksc.nasa.gov/shuttle/missions/missions.html.

Biological Research in Canisters (BRIC) Payloads

The Biological Research in Canisters (BRIC) experiments are designed to examine the effects of microgravity on a wide range of physiological processes in higher-order plants and arthropod animals (e.g., insects, spiders, centipedes, crustaceans).

BRIC hardware consists of small, self-contained canisters that require no power. BRIC experiments require minimal or no crew interaction. The absence of power and crew time requirements make the BRIC experiments easy to fly, and they can be manifested whenever space may become available in the Shuttle middeck.

Five Shuttle missions were flown with a total of six BRIC payloads during the 1991–1995 period: STS-68 and STS-64 in 1994; and STS-63, STS-70, and STS-69 in 1995.

PAYLOAD PROFILE: BRIC-01/STS-68

Mission Duration: 11 days **Date:** September 30–October 11, 1994

Life Sciences Research Objectives
- To observe the effects of microgravity on starch concentration in soybean seedlings
- To study how microgravity affects gypsy moth development

Life Sciences Investigations
- Developmental Biology (BRIC1-1)
- Plant Biology (BRIC1-2)

Organisms Studied
- *Glycine max* (soybean)
- *Lymantria dispar* (gypsy moth)

Flight Hardware
- BRIC-60 Canisters

Biological Research in Canisters 1/STS-68

Mission Overview

The STS-68 mission was launched on the Space Shuttle Endeavour on September 30, 1994. The 11-day mission ended on October 11 with the landing at Edwards Air Force Base, California. Six crew members occupied the Shuttle during the mission.

The primary mission objective was to fly the Space Radar Laboratory, a complex radar system for gathering environmental information about the Earth. The mission had several secondary objectives, including flying two payloads sponsored by Kennedy Space Center. One was the fifth in the CHROMEX series. The other was first in the series of payloads called Biological Research in Canisters (BRIC-01).

Life Sciences Research Objectives

The BRIC-01 payload comprised two experiments. The soybean experiment was designed to study the effect of microgravity on the concentration, metabolism, and localization of starch in plant tissue. Carbohydrate-rich plants are not only a significant food source on Earth, but are also likely to provide an ideal supply of food on long-duration space missions. Research on the effects of the microgravity environment on these plants is critical to the future of manned space exploration.

The objective of the gypsy moth experiment was to study the effect of microgravity on the diapause cycle of gypsy moths. Diapause is the dormant period in an insect life cycle when it is undergoing development into its next phase. Previous space flight experiments showed that microgravity may shorten the diapause cycle of gypsy moths and lead to

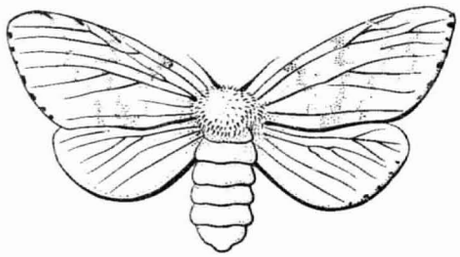

Gypsy Moth (*Lymantria dispar*)

the emergence of larvae that are sterile. The capability to produce sterile larvae may lead to the development of a natural form of pest control. However, in these experiments, environmental factors such as humidity and carbon dioxide were not controlled. This experiment used techniques to control these factors.

Life Sciences Payload

Organisms

Soybean (*Glycine max*) seeds were the subjects of the first BRIC-01 experiment. Soybeans produce starch during early seedling growth, making them useful as subjects for studies of starch metabolism.

The gypsy moth (*Lymantria dispar*) was used as the subject in the second experiment. These moths were in the diapause stage that occurs in larval development. Half of the eggs used in the experiment were collected from the wild and the other half were laboratory reared.

Hardware

The specimens were flown in BRIC-60 canisters, which require no power. Each canister is an anodized aluminum cylinder with an upper and a lower chamber, which maintain a light-tight environment. Nine 60-mm petri dishes or 13 teflon tubes for growing seedlings can be placed inside each chamber.

Operations

Preflight

For the soybean experiment, 52 soybean seeds were prepared for flight. Each seed was rolled in a piece of filter paper and placed in a teflon tube. Thirteen tubes were placed in each chamber of two BRIC-60 canisters. A small amount of water placed in each chamber provided moisture for seed germination.

For the gypsy moth experiment, nine petri plates were placed in each chamber of three BRIC-60 canisters. Five petri plates contained a gypsy moth egg mass (about 100 eggs). Three of the petri dishes contained a small amount of antifungal powder, gauze, and sterilized water to maintain the humidity level inside the canister chamber. The remaining petri dish in each chamber contained lithium hydroxide to prevent carbon dioxide buildup.

Inflight

While no inflight experiment procedures were conducted by the crew, 24-hour asynchronous ground control experiments were conducted for both experiments in the Orbiter Environmental Simulator (OES). The OES is a modified environmental chamber at Kennedy Space Center whose temperature, humidity, and CO_2 level are electronically controlled based on downlinked environmental data from the orbiter. Thus the plants within the chamber are exposed to environmental conditions that are similar to those experienced by the flight group during the mission. One soybean control group was horizontally rotated on a clinostat to simulate microgravity, while the other was kept under normal Earth gravity conditions.

Postflight

For the soybean experiment, measurements of gas concentrations in the canisters were made, and the seeds were then harvested. Various analyses were conducted including measurements of growth, biomass partitioning, carbohydrate concentrations, and 11 different enzyme activity measurements related to starch and sugar metabolism in the cotyledons. Ultrastructural analysis of cotyledon, hypocotyl, and root tissue sections was also conducted.

Results

Soybean Study

Starch concentration in the space-grown soybean cotyledons was reduced by approximately 25 percent compared to the ground controls. Only adenosine diphosphate glucose pyrophosphorylase (ADP), a rate-limiting enzyme in starch synthesis, was affected by the space flight environment. The activity of this enzyme was lower in the space-grown cotyledons than in the ground controls, suggesting that the lower starch concentration was due to a lower activity of this enzyme.

Gypsy Moth Study

No information about the results of the experiment is available.

Additional Reading

NASA. STS-68 Press Kit, August 1994. Contained in NASA Space Shuttle Launches Web site. http://www.ksc.nasa.gov/shuttle/missions/missions.html.

PAYLOAD PROFILE: BRIC-02/STS-64

Mission Duration: 11 days **Date:** September 9–20, 1994

Life Sciences Research Objectives

- To determine the influence of microgravity on embryo initiation, differentiation, and development, and the ultimate reproductive capacity of resultant plants

Life Sciences Investigations

- Plant Biology (BRiC2-1)

Organisms Studied

- *Dactylis glomerata* L. (orchardgrass)

Flight Hardware

- BRIC-100 Canisters

Biological Research in Canisters 2/STS-64

Mission Overview

The STS-64 mission was launched on the Space Shuttle Discovery on September 9, 1994. The mission ended on September 20 with the Shuttle landing at Edwards Air Force Base, California. The Shuttle carried a crew of six.

The primary mission objectives were to test the LIDAR-in-Space Technology Experiment, to conduct an atmospheric research technology test using laser beams, to deploy and retrieve SPARTAN-201, a free-flying astronomical observer used to study solar wind formation, and to use the Robot Operated Materials Processing System to investigate robot handling of thin film samples.

One of the secondary objectives was to fly the Biological Research in Canisters 2 (BRIC-02) payload, sponsored by Kennedy Space Center.

Life Sciences Research Objectives

The overall objective of BRIC-02 was to provide information on the influence of microgravity on initiation, differentiation, and development of somatic embryos resulting from an *in vitro* leaf culture system in orchardgrass. The experiment also assessed the ultimate reproductive capacity of resultant plants.

The ability to produce multiple generations of plants for food and waste recycling is critical to achieving the goal of long-duration space travel. Research such as the BRIC-02 study helps to determine whether normal plant embryo development can occur in the microgravity environment.

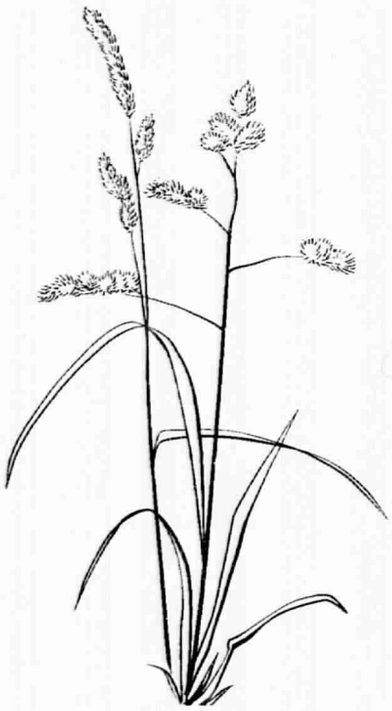

Orchardgrass (*Dactylis glomerata* L.)

Life Sciences Payload

Organisms

Orchardgrass (*Dactylis glomerata* L.) plants were used in the experiment. Investigators studied the development of somatic, or asexually produced, embryos rather than sexually produced embryos within seeds because early development of embryos cannot be easily studied in seeds. The somatic embryos of orchardgrass have a number of traits that make them desirable for study. Most importantly, they develop fully and are identical in size and morphology to embryos produced by sexual reproduction. The system used for this experiment was based on paired half-leaf segments, which provided a precise control and the opportunity to use paired statistics for data analyses.

Hardware

BRIC-100 canisters were used to hold the specimens for the experiment. Like the canisters used on the BRIC-01 mission, the BRIC-100 canister is an anodized aluminum cylinder that requires no power. However, the BRIC-100 canisters are larger than the BRIC-60, are completely sealed, consist of a single chamber, and accommodate nine 100-mm petri dishes.

Operations

Preflight

The basal portion of the innermost leaves of an orchardgrass plant were split along the midvein and cut into small segments. Segments were plated onto nutritive medium in petri dishes (Fig. 12). Nine petri dishes containing segments from one-half of each leaf were placed in each of three BRIC-100 canisters to be flown on the Shuttle, while dishes containing the corresponding "sister" segments from the other half of each leaf were placed in canisters that served as ground controls. The leaf segments were plated 21 days, 14 days, 7 days, 3 days, and 21 hours before launch. They were kept in darkness at a temperature of 21 °C before the flight.

Inflight

A delayed synchronous control experiment was conducted in the Orbiter Environmental Simulator (OES) using "sister" segments from opposite leaf halves of those used for the flight group. For a general description of the OES, see BRIC-01.

No inflight experiment procedures were conducted by the crew.

Postflight

Shortly after landing, some of the leaf segments from the flight and control groups were placed in fixative. The remaining segments were fixed at different times postflight or incubated in light in order to examine their capability to regenerate.

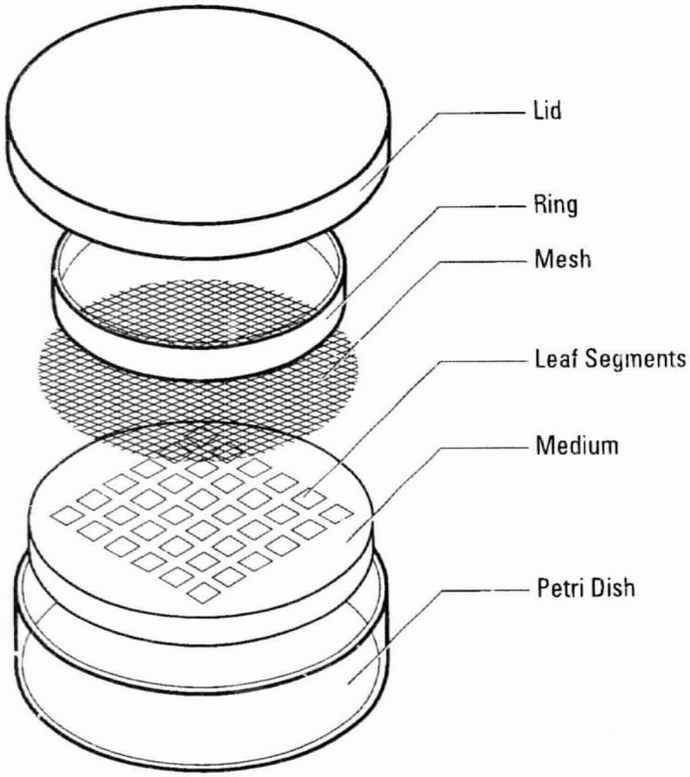

Figure 12. Schematic of the petri dish assemblies for the BRIC-02 orchard grass study.

The embryos from flight and control tissue were allowed to continue their development until becoming seedlings, at which point they were planted at the investigator's field study center.

Results

The microgravity environment affected the ability of the cells in the leaf segments to produce somatic embryos. Somatic embryogenesis was most significantly decreased in the leaf segments that were plated 21 hours before launch. Histological examination revealed that cell division and other early embryogenic events were adversely affected in the leaf tissue from the flight group.

Field-established plants, controls, and flight plants showed normal pollen fertility. Analyses of the reproductive cells of the 21-hour flight plant showed a slightly higher frequency of laggards, bridges, and fragments in the chromosomes and 1.8 times more micronuclei.

Additional Reading

NASA. STS-64 Press Kit, February 1995. Contained in NASA Space Shuttle Launches Web site. http://www.ksc.nasa.gov/shuttle/missions/missions.html.

PAYLOAD PROFILE: BRIC-03/STS-63

Mission Duration: 8 days **Date:** February 3–11, 1995

Life Sciences Research Objectives

- To determine if microgravity exposure decreases starch concentration in soybean seedlings

Life Sciences Investigations

- Plant Biology (BRIC3-1)

Organisms Studied

- *Glycine max* (soybean)

Flight Hardware

- Ambient Temperature Recorder (ATR-4)
- BRIC-60 Canisters
- GN_2 Freezer

Biological Research in Canisters 3/STS-63

Mission Overview

The STS-63 mission was launched on the Space Shuttle Discovery on February 3, 1995. The eight-day mission ended on February 11. The six-member crew included the first female pilot to fly a space mission and a mission specialist from Russia.

The primary mission objective was to perform a rendezvous and fly-around of the Russian space station Mir to verify flight techniques, communications and navigation interfaces, and engineering analyses associated with Shuttle/Mir proximity operations in preparation for the STS-71 docking mission. STS-63 was also the third flight of SPACEHAB.

Ames Research Center sponsored two payloads on the mission, named National Institutes of Health Cells 3 (NIH.C3) and IMMUNE.2. Kennedy Space Center sponsored two payloads, called CHROMEX-06 and Biological Research in Canisters 3 (BRIC-03).

Life Sciences Research Objectives

The objective of BRIC-03 was to examine the way that microgravity influences the concentration, metabolism, and localization of starch in plant tissue. The experiment was a replication and extension of the BRIC-01 study that was flown on the STS-68 mission on September 30, 1994. The results of the BRIC-01 experiment indicated that soybeans flown in space had a lower starch concentration, decreased activity of a starch synthesizing enzyme, and a potent gaseous plant hormone. By reflying the experiment, researchers hoped to confirm these findings and to study the mechanisms responsible for the observed effects.

Soybean (*Glycine max*)

Life Sciences Payload

Organisms

Fifty-two soybean (*Glycine max*) seeds were used in the experiment.

Hardware

Soybean seeds were flown in BRIC-60 canisters. For a general description of the BRIC-60 canister, see BRIC-01.

Other hardware used in the experiment included a Gaseous Nitrogen (GN_2) Freezer, a pair of cryogenic handling gloves, and an Ambient Temperature Recorder (ATR-4). The GN_2 Freezer is a passive freezer, developed at Johnson Space Center, which is cooled by nitrogen at the phase change point between liquid and gas. The ATR-4 is a self-contained, battery-powered package that can record up to four channels of temperature data.

Operations

Preflight

Fifty-two soybean seeds were prepared in the following manner. Each seed was rolled in a piece of filter paper and placed in a teflon tube. Thirteen tubes were placed in each chamber of the two BRIC-60 canisters. A small amount of water was placed in each chamber and provided moisture for seed germination.

Inflight

Two 24-hour asynchronous ground control experiments were conducted in the Orbiter Environmental Simulator (OES). For a general description of the OES, see BRIC-01. One control group was rotated on a clinostat to simulate microgravity, while the other group grew horizontally in normal gravity conditions.

On the fifth day of the space flight, the crew transferred one of the BRIC-60 canisters to the GN_2 Freezer for postflight analysis.

Postflight

Measurements of gas concentrations in the canisters were made and the seeds were then harvested. Various analyses were conducted, including measurements of growth, biomass partitioning, carbohydrate concentrations, and related enzyme activity measurements in the cotyledons. Ultrastructural analysis of cotyledon, hypocotyl, and root tissue sections was also conducted.

Results

While overall biomass accumulation by the growing seedling was diminished as a result of space flight, the mobilization of reserves for the cotyledons was not affected, suggesting an increase in respiration in the space-grown plants. Analysis of the cotyledons frozen inflight revealed lower starch concentration, lower activity of the starch synthetic enzyme adenosine diphosphate glucose pyrophosphorylase, and higher activity of the sucrose synthetic enzyme sucrose phosphate synthase relative to the

The Challenges of Payload Science and Engineering
Interview with Deborah Wells and David Chapman

The process of taking a space life sciences experiment from the proposal phase through launch and landing can be long and fraught with challenges. Deborah Wells, employed by the Bionetics Corporation, and David Chapman, employed by Dynamic Corp., both at Kennedy Space Center (KSC), offer complementary perspectives on payload development based on their varied experiences in the space program.

Wells comes to payload development from the engineering perspective. When she began work at KSC in 1988, NASA had not yet returned to flight after the Challenger disaster. She initially worked on a telescience project. "We were trying to figure out what it would take to do remote experiments," said Wells. "In other words, the PI stays at his desk at the university, but can still interact and participate in a space flight experiment from there, instead of having to go to Marshall [Space Flight Center] or Johnson [Space Center] for 16 days." They used the early Internet technology to transmit audio and video from KSC to MIT. "It was pretty successful. We showed that you could do this remotely."

Such technology would prove useful as NASA returned to flight in 1989, with the STS-29 mission. "About that time," says Wells, "The flight [support] group was only five people. Then we started having experiments come through Hangar L." She saw the team at KSC grow rapidly. The core flight group split into Mission Operations and Payload Development. Eventually, Payload Development split into Payload Mission Management and Payload Engineering. Wells currently works in Payload Mission Management, where she has helped develop several of the CHROMEX and BRIC missions. Of the division of labor in the flight group, she says "It's a natural division. You have people who are good at the nuts and bolts, the design and fabrication. And you have people who are better at the schedules and implementing the requirements. However, we still cross the boundaries. Even though I work in mission management, I can still do the engineering design work. The people in the engineering group can be in charge of a payload."

Wells emphasizes the importance of being able to work across those boundaries. "Most of the folks in the management group are biological engineers, or engineers who have had some sort of biological life sciences training. They can talk to the investigator and understand the experiment, and then turn to the development engineer and communicate that in the engineer's language. Then they can turn to Mission Operations and talk scientific requirements for the experiment."

David Chapman brings the science perspective to payload development. He currently leads flight science integration at KSC, and he understands first hand the challenges of bridging experiment and flight hardware requirements. After working in the aerospace industry during the flights of Biosatellite II and III (1966–1967), he conducted research for more than 20 years at the University of Pennsylvania. His research group first flew a space life sciences experiment on Spacelab 1. For that flight, they were given the rare opportunity to design their own flight hardware. Chapman was reminded of the experience during the excitement of the landing of the Mars Pathfinder, "When they turned it on, activated the experiment, and it actually worked—that's how we felt." After that experience, Chapman cofounded a company, which provided instrumentation services to other microgravity investigators. Their first product, a canister designed for a plant hormone experiment, became the prototype for the BRIC program canisters.

Soon after Spacelab 1, they had the chance to design their own flight hardware once again: the Gravitational Plant Physiology Facility that flew on the first International Microgravity Laboratory mission. He considers himself fortunate for these opportunities, since it is now considered too expensive to let scientists develop their own hardware. But, said Chapman, "If you do involve the scientists in the design and development of the hardware, that really improves the final product. We've done that at KSC, with a number of experiments. These have involved not only the investigators, but also people in the science community here at KSC, along with the engineers." Or, as Wells said earlier, "It's still one big team."

ground controls. Other starch and sucrose metabolic enzymes were unaffected by space flight.

In seedlings returned to Earth unfrozen, starch concentrations in the cotyledons were not significantly different from those in the ground controls. However, ultrastructural analysis revealed that the number and total area of the starch grains were significantly greater in the cotyledons from the space-grown plants, suggesting a reduction in starch grain density. Ethylene concentration was twice as high in the headspace of the space flight canisters relative to the ground controls. Ethylene, often produced under conditions of plant stress, may play a role in the observed space flight effects on growth and carbohydrate metabolism.

Additional Reading

Brown, C. S., E. M. Hilaire, J. A. Guikema, W. C. Piastuch, C. F. Johnson, E. C. Stryjewski, B. Peterson, and D. S. Vordermark. Metabolism, Ultrastructure and Growth of Soybean Seedlings in Microgravity: Results from the BRIC-01 and BRIC-03 Experiments. *American Society for Gravitational and Space Biology Bulletin*, vol. 9(1), 1995, p. 93.

NASA. STS-63 Press Kit, February 1995. Contained in NASA Space Shuttle Launches Web site http://www.ksc.nasa.gov/shuttle/missions/missions.html.

PAYLOAD PROFILE: BRIC-04 AND BRIC-05/STS-70

Mission Duration: 9 days **Date:** July 13–22, 1995

Life Sciences Research Objectives

- To examine the effects of microgravity on tobacco hornworm hormone release and subsequent development
- To compare the effects of microgravity versus water availability and uptake on cell division in plant embryos

Life Sciences Investigations

- Developmental Biology (BRIC4-1)
- Plant Biology (BRIC5-1)

Organisms Studied

- *Manduca sexta* (tobacco hornworm)
- *Hemerocallis* cv. Autumn Blaze (daylily)

Flight Hardware

- BRIC-100 Canisters

Biological Research in Canisters 4 and 5/ STS-70

Mission Overview

The STS-70 mission was launched on the Space Shuttle Discovery on July 13, 1995. The Shuttle landed on July 22 after a flight that lasted nearly nine days. There were five crew members onboard the Shuttle during the mission.

The primary objective of the STS-70 mission was to deploy NASA's Tracking and Data Relay Satellite. Several secondary objectives were also accomplished on the mission. One of these was to carry the National Institutes of Health Rodents 2 (NIH.R2) payload.

Kennedy Space Center sponsored two payloads on the mission, termed Biological Research in Canisters 4 and 5 (BRIC-04 and BRIC-05).

Life Sciences Research Objectives

Previous ground-based studies on altered orientation of tobacco hornworm pupae relative to the gravitational field had shown an effect on the hormone ecdysone, which caused changes in levels of some amino acids, rate of adult development, and development of flight muscles. The BRIC-04 experiment examined the effects of microgravity on tobacco hornworm ecdysone release and subsequent development. It was expected that the use of an insect model to study hormone systems and muscle development would help researchers further the understanding of how humans may react to long-duration space flight.

The BRIC-05 experiment was designed to determine whether the cell-division changes observed in daylily embryos during space flight are

due to direct effects of microgravity or indirect effects such as water availability and uptake. Differences in hydrodynamics in microgravity may affect water availability to plants. Ground-based studies indicate that water-related activity can impact the integrity of chromosomes.

Life Sciences Payload

Organisms

Tobacco hornworm (*Manduca sexta*) pupae were used as the subjects of the BRIC-04 experiment. Fifty-four pupae each were used in the flight group and the ground control group. The pupa is a resting stage in the life cycle of the hornworm that occurs between the larval and adult stages. The pupae used in BRIC-04 ranged in age from 5 to 65 hours.

Daylily embryos (*Hemerocallis* cv. Autumn Blaze) were studied in the BRIC-05 experiment.

Hardware

The BRIC payloads were flown in BRIC-100 canisters. For a general description of the BRIC-100 canisters, see BRIC-02.

Operations

Preflight

Petri dishes served as platforms to which two polycarbonate tubes were attached by a strip of Velcro (Fig. 13). A single tobacco hornworm pupa wrapped in tissue was placed within each tube. The ends of the tubes were closed with cotton balls secured in place with cellophane tape. Each of the three BRIC-100 canisters contained 18 pupae on 9 petri dishes. The canisters were loaded into the middeck of the orbiter with the pupae maintained in a horizontal position until launch.

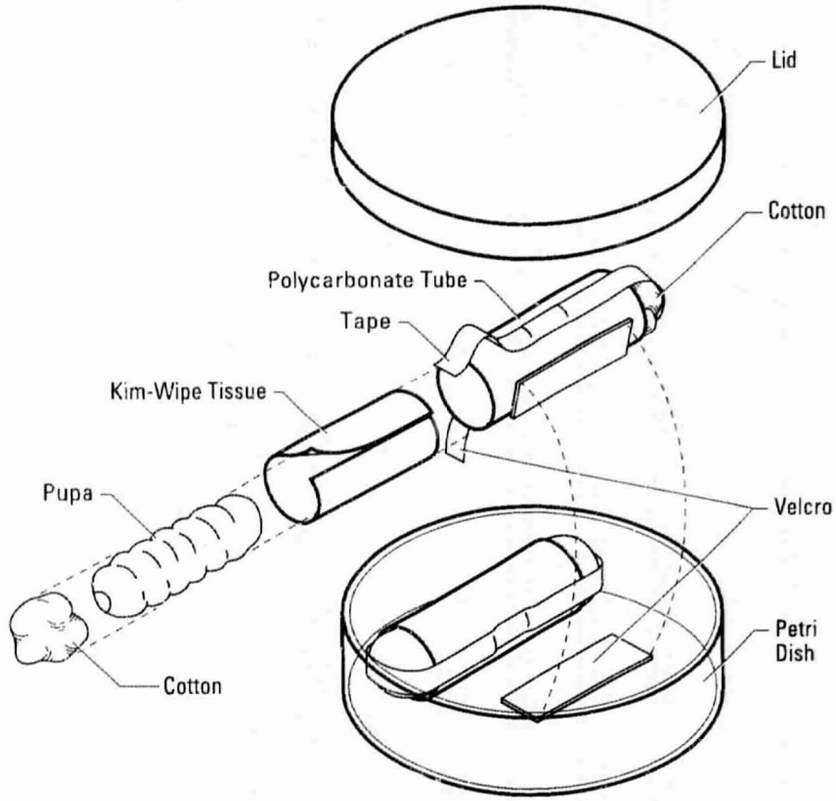

Figure 13. Schematic of the petri dish assemblies for the BRIC-04 tobacco hornworm study.

Petri dishes in the BRIC-05 payload contained semi-solid agar nutrient medium (Fig. 14). A honeycomb sheet inside each petri dish provid-

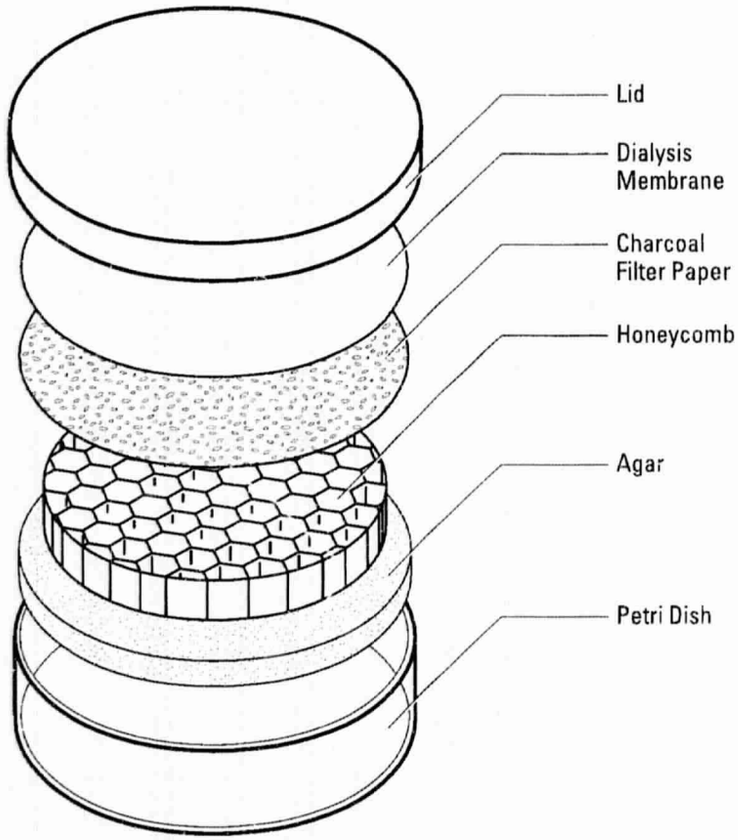

Figure 14. Schematic of the petri dish assemblies for the BRIC-05 daylily study.

ed mechanical support to the agar. A sheet of activated charcoal-impregnated filter paper was kept above the agar. A dialysis membrane supporting the plant cell culture was placed on top of the filter paper. A total of 27 petri dishes in three BRIC-100 canisters were loaded into the middeck of the Shuttle.

Inflight

A 48-hour asynchronous control experiment was conducted in the Orbiter Environmental Simulator (OES) to complement each experiment. For a general description of the OES, see BRIC-01.

No inflight experiment procedures were conducted by the crew for BRIC-04 or BRIC-05.

Postflight

After landing, the tobacco hornworm pupae used in BRIC-04 were removed from the spacecraft and examined morphologically. Half of the pupae were euthanized for blood collection so that amino acid and hormone levels could be analyzed. The remaining 27 pupae were transported live to the investigator's laboratory in order to monitor their development.

Upon landing, 85 percent of the cells used in BRIC-05 were chemically fixed for examination, while 15 percent were allowed to develop for examination of postflight readaptation and recovery phenomena.

Results

Tobacco Hornworm Study

Neither the flight pupae nor the ground controls had significant development. After the animals were removed from the sealed canisters they began developing. They were monitored and a few completed development into the adult moth. Overall, results for the flight and

ground control insects were in agreement. It is believed that the failure of both the flight and ground control animals to develop while in the canisters was due to the buildup of carbon dioxide, which anesthetized the insects, causing them to become dormant.

Daylily Cell Study

The BRIC-05 experiment indicated that embryogenic cells of daylily are an excellent model for the study of space effects on cell division, embryological development, and chromosome structure of *in vitro* cultured cells in space. As with previous missions, flight materials did not grow as well as ground controls. Generally, flight specimens showed various manifestations of stress. Cells with chromosome breaks, bridges, and double nuclei were found in space samples and quantified. None of these abnormalities were evident in the ground controls.

Additional Reading

NASA. STS-70 Press Kit, July 1995. Contained in NASA Space Shuttle Launches Web site. http://www.ksc.nasa.gov/shuttle/missions/missions.html.

PAYLOAD PROFILE: BRIC-06/STS-69

Mission Duration: 11 days **Date**: September 7–18, 1995

Life Sciences Research Objectives
- To study graviperception and cell signal processing and transduction

Life Sciences Investigations
- Cell and Molecular Biology (BRIC6-1)

Organisms Studied
- *Physarum polycephalum* (acellular slime mold)

Flight Hardware
- BRIC-60 Canisters
- GN_2 Freezer

Biological Research in Canisters 6/STS-69

Mission Overview

The STS-69 mission was launched on the Space Shuttle Endeavour on September 7, 1995. Endeavour landed on September 18 after 11 days in Earth orbit. A five-member crew flew aboard the Shuttle.

The primary mission objectives were to deploy, operate, and retrieve the second Wakeshield Facility used for materials processing, to fly the Shuttle Pointed Autonomous Research Tool for Astronomy (SPARTAN 201-03) used to study solar wind, and to perform spacewalks to test assembly techniques for the International Space Station.

One of the secondary objectives was to fly the National Institutes of Health Cells 4 payload (NIH.C4), sponsored by Ames Research Center. Kennedy Space Center sponsored an additional secondary payload called Biological Research in Canisters 6 (BRIC-06).

Life Sciences Research Objectives

Cellular signal processing in all organisms is probably based on fundamentally similar mechanisms. The stimulus interacts with a primary receptor in order to initiate a response, mediated by signal transduction pathways. In the case of gravity as a stimulus, it has been shown that free-living single eukaryotic cells, such as slime molds, often use this vector for their spatial orientation (gravitaxis) and, in addition, show distinct sensitivities to gravity. For this experiment, slime mold cells were used to locate the gravireceptor and determine the interaction between signal perception and the cell's response (signal transduction and processing).

Life Sciences Payload

Organisms

To investigate the acceleration-stimulus signal transduction chain, a gravisensitive Myxomycete, acellular slime mold (*Physarum polycephalum*), was used. Its ameboid locomotion represents one of the two major types of cellular motility (the other being microtubule-based). The plasmodia, giant cells, display a distinct gravitaxis and their intrinsic rhythmic contractions and cytoplasmic streaming are modulated by gravity.

Hardware

Petri dishes were flown in BRIC-60 canisters. For a general description of the BRIC-60, see BRIC-01. A Gaseous Nitrogen (GN_2) Freezer was flown to allow freezing of canister contents inflight. For a general description of the GN_2 Freezer, see BRIC-03.

Operations

Preflight

Several endoplasmic drops of slime mold were added to a nutrient agar in petri dishes and allowed to grow for two to three hours. Thirty-six such petri dishes were then wrapped in parafilm and loaded into two BRIC-60 canisters. Lythium hydroxide pouches were included in each canister to scrub carbon dioxide.

Inflight

A 24-hour asynchronous ground control was conducted in the Orbiter Environmental Simulator (OES). For a general description, see BRIC-01.

BRIC canisters were frozen in the GN_2 Freezer at two different points in the flight: nine petri dishes after two days in space and an additional nine after three days in space. The remaining 18 petri dishes were returned to Earth and frozen after recovery.

Postflight

The flight samples were removed from the canister upon recovery and then analyzed and compared with the ground controls. Cellular secondary messenger levels (the cyclic nucleotides cAMP and cGMP) were analyzed.

Results

BRIC-06 demonstrated that only the level of the secondary messenger cAMP drops significantly with time spent in microgravity in the force-generating part of the cell. Therefore, contrary to short-term gravistimulations, adaptation to microgravity leads to permanently reduced cAMP levels. The results indicated that in *Physarum polycephalum*, the secondary messenger cAMP is involved in gravity signaling.

Additional Reading

NASA. STS-69 Press Kit, August 1995. Contained in NASA Space Shuttle Launches Web site. http://www.ksc.nasa.gov/shuttle/missions/missions.html.

Page intentionally left blank

NASA/Mir Program

Following agreements reached in October 1992, NASA and the Russian Space Agency (RSA) signed a formal contract in June 1993 initiating the NASA/Mir collaborative space program. The program would make use of the Space Shuttle and the Russian Soyuz spacecraft to transport crew and payloads to and from the Russian Mir space station. NASA/Mir, also known as International Space Station (ISS) Phase 1, provided NASA and RSA with opportunities for in-depth collaboration. The program also acted as a test bed in which NASA could work through many of the operational and logistical issues that will need to be resolved for the ISS.

Within a year of the contract signing, the first related missions had flown. During 1995, the first two shuttle missions to dock with Mir were successfully completed, and the first NASA astronaut to complete an extended stay on Mir resided on the station for 90 days, the longest U.S. stay in space since the 59-day Skylab 3 mission in 1973.

The Mir space station is a long-duration space habitation facility that has been in operation since 1986 (Fig. 15). It is capable of housing up to three crew members for extended periods. On occasion, visiting astronauts have increased the population on Mir to six for up to a month. Mir has a modular structure that allows it to be expanded and modified over time. It currently contains seven modules: the Core Module, Kvant 1, Kvant 2, Kristall, Spektr, Priroda, and the Docking Module. The Core Module forms the center of the Mir complex of modules, and it joins to the other modules by means of mechanical, electrical, and hydraulic connections. Kvant 1 is used for astrophysics experimentation. Kvant 2 provides personal hygiene facilities and additional power.

Kristall, docked with Mir since mid-1990, was originally designed to house biological and materials production technologies and now also holds the Docking Module, which provides a permanent port for the Shuttle. The module also housed some Ames Research Center-sponsored life sciences investigations. Spektr was designed for remote sensing and Earth observation and includes additional solar arrays and science equipment. The Soyuz craft functions as the crew emergency vehicle, for rapid return to Earth.

The NASA/Mir program consisted of two phases: 1A and 1B. Phase 1A included the first extended stay of an American on Mir, two Shuttle dockings with the station for exchange of crew and supplies, and the completion of three NASA life sciences experiments on the station. These experiments were sponsored by Ames Research Center. This phase of the program was officially initiated with the flight of a Russian cosmonaut on the Space Shuttle Discovery (STS-60) in February 1994. One year later, another cosmonaut flew onboard Discovery, on the STS-63 mission. On that mission, Discovery flew around Mir, halting within 37 feet of the station. In March 1995, an American astronaut flew to Mir on a Russian Soyuz spacecraft and remained onboard the station for three months with two cosmonaut colleagues. The first docking of the Space Shuttle with Mir occurred during the STS-71 mission in June 1995. Upon docking, Atlantis dropped off two cosmonauts and picked up the crew already onboard Mir, for return to Earth. STS-71 was the

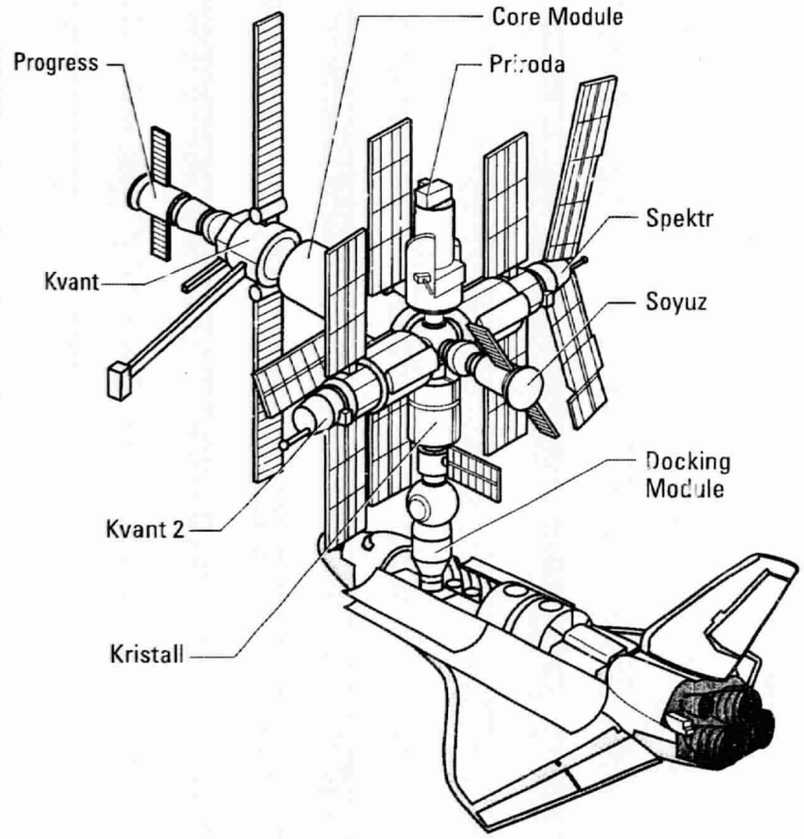

Figure 15. The Russian Mir space station docked with Space Shuttle.

first time that the Space Shuttle was used to change a space station crew, a task that will become routine once the International Space Station becomes operational. In November 1995, Atlantis docked with Mir for the second time, on the STS-74 mission. The main task of the mission was to deliver and install the Docking Module. Water, supplies, and equipment were also delivered to Mir, while experiment samples, equipment for repair, and products manufactured on the station were picked up for return to Earth. NASA/Mir Phase 1B is described in the Post-1995 Missions and Payloads section of this volume.

The NASA/Mir program presented Russian and American scientists, engineers, astronauts, and technical and management personnel with major new challenges. Experience in collaboration gathered during the first phase of the program will substantially benefit the extensive cooperative efforts to take place during the International Space Station era.

The three NASA/Mir Phase 1A experiments sponsored by Ames Research Center that occurred before the end of 1995, including the dockings of STS-71 and STS-74, are described in the following section.

Additional Reading

NASA. The International Space Station: Benefits from the Shuttle-Mir Program. NASA Facts IS-1998-08-ISS010 JSC, August, 1998. http://spaceflight.nasa.gov/spacenews/factsheets/index.html.

Newkirk, D. *Almanac of Soviet Manned Space Flight*. Houston: Gulf Publishing Company, 1990.

Savage, P.D., G.C. Jahns, and T. Schnepp. Space Station Lessons Learned from NASA/Mir Fundamental Biology Research Program. *SAE Technical Paper* 981606, July 1998.

Savage, P.D., G.C. Jahns, V. Sytchev, P. Davies, D. Pletcher, R. Briggs, and R. Schaefer. Fundamental Biology Research during the NASA/Mir Science Program. *SAE Technical Paper* 951477, July 1998.

NASA/Mir Payloads

The NASA/Mir missions offered scientists the unique opportunity to perform extended-duration experiments, which allowed observations of the long-term effects of microgravity and increased opportunities for data collection. A Joint Mission Science Working Group (JMSWG) managed the scientific research. The JMSWG consisted of representatives from both NASA and the Russian Space Agency (RSA) in each of the research areas designated by the NASA/Mir program: Fundamental Biology, Human Life Sciences, Advanced Technology, Microgravity Research, International Space Station Risk Mitigation, Earth Sciences, and Space Sciences.

Ames Research Center, which has collaborated with the Russians for more than 20 years on the Cosmos biosatellite program and the Spacelab Life Sciences Shuttle missions, managed the life sciences portion of the NASA/Mir research agenda. The experiments addressed issues of avian development, plant biology, circadian rhythms, and radiation monitoring.

Scientists involved in the life sciences payloads faced an experiment development time far shorter than that of Shuttle missions. Whereas Shuttle experiment development normally takes three to four years from the time of selection to the actual flight, investigators in the NASA/Mir program had an average of 12 to 18 months of preparation time. Despite the challenges presented by this accelerated schedule, the program produced many insights into the effects of long-term microgravity exposure.

During Phase 1A of NASA/Mir, the first of the avian development and plant biology experiments were performed (Fig. 16).

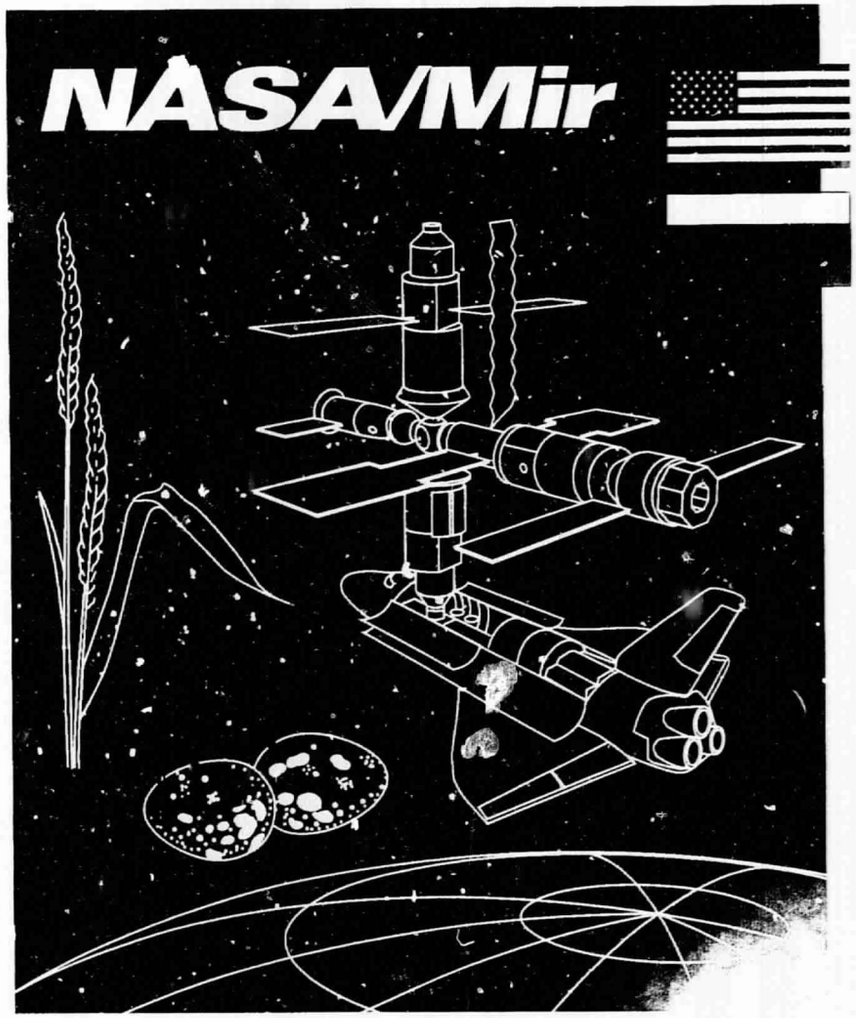

NASA/MIR SCIENCE PROGRAM FUNDAMENTAL BIOLOGY RESEARCH SPONSORED BY AMES RESEARCH CENTER

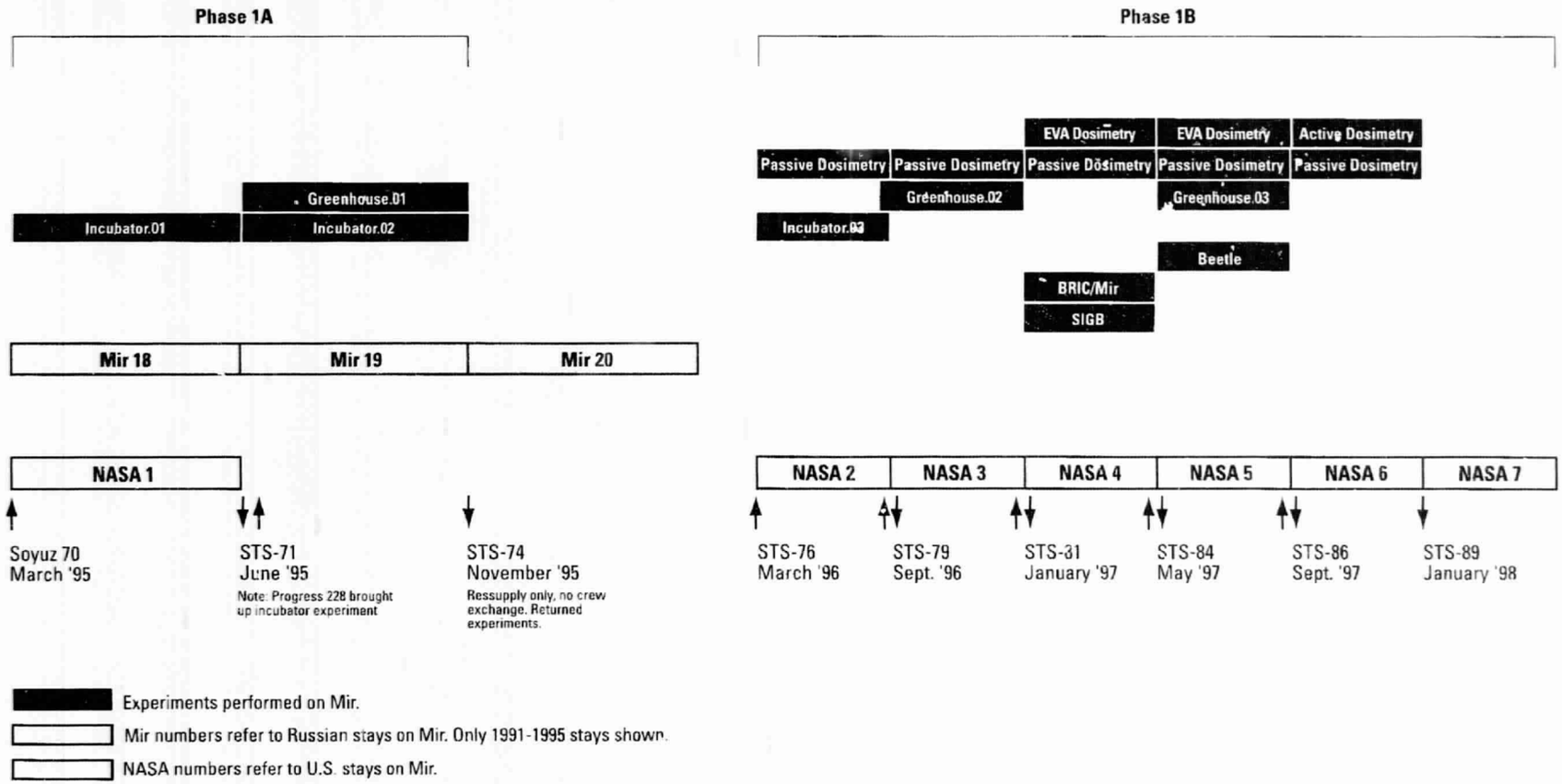

Experiments performed on Mir.

Mir numbers refer to Russian stays on Mir. Only 1991-1995 stays shown.

NASA numbers refer to U.S. stays on Mir.

Figure 16. NASA/Mir life sciences experiment schedule.

Three life sciences experiments were conducted during the 1991–1995 period: Incubator 1, which was on Mir between April and June 1995; and Incubator 2 and Greenhouse 1, which were on Mir between July and November 1995. Phase 1B saw the continuation of these experiments, the implementation of the circadian rhytim and radiation dosimetry experiments and the accomplishment of the first "seed-to-seed" plant growth cycle. The overviews of the Phase 1B experiments, performed from 1996 to 1998, can be found in the Post-1995 Missions and Payloads NASA/Mir Phase 1B Experiment Profile section.

EXPERIMENT PROFILE: NASA/MIR–INCUBATOR 1

Brought to Mir: Progress 227 (Russian) **Returned to Earth:** STS-71

Duration on Mir: April 1995–June 1995

Life Science Research Objectives
- To study the occurrence of microgravity-induced abnormalities during avian embryonic development
- To examine the differences in the formation of avian organs, bones, and vestibular gravity receptors in microgravity as compared to Earth

Life Science Investigations
- Developmental Biology (Incubator1-1, 2, 3, 4, 5, 6, 7, 8, 9)

Organisms Studied
- *Coturnix coturnix japonica* (quail) eggs

Flight Hardware
- Egg Storage Kit
- Fixation Kit
- Glove bag with Filter/Pump Kit
- Incubator (supplied by RSA)

EXPERIMENT PROFILE: NASA/MIR–GREENHOUSE 1

Brought to Mir: STS-71 **Returned to Earth:** STS-74

Duration on Mir: June 1995–November 1995

Life Science Research Objectives
- To observe the effects of microgravity on basic plant processes, biochemistry, and structure
- To test the Svet plant growth facility and associated hardware for the 1996 Greenhouse 2 experiment

Life Science Investigations
- Plant Biology (Greenhouse1-1)

Organisms Studied
- *Triticum aestivum* (Super-Dwarf wheat)

Flight Hardware
- Gas Exchange Measurement System (GEMS)
- Svet Plant Growth Facility

EXPERIMENT PROFILE: NASA/MIR – INCUBATOR 2

Brought to Mir: STS-71 **Returned to Earth:** STS-74

Duration on Mir: July 1995–November 1995

Life Science Research Objectives

- To study the occurrence of microgravity-induced abnormalities during avian embryonic development
- To examine the differences in the formation of avian organs, bones, and vestibular gravity receptors in microgravity as compared to Earth

Life Science Investigations

- Developmental Biology (Incubator2-1, 2, 3, 4, 5, 6, 7, 8, 9)

Organisms Studied

- *Coturnix coturnix japonica* (quail) eggs

Flight Hardware

- Egg Storage Kit
- Fixation Kit
- Glove Bag with Filter/Pump Kit
- Incubator (supplied by RSA)

NASA/Mir Phase 1A

Mission Overview

Incubator, the first Fundamental Biology experiment on the Russian space station Mir, was performed during the first extended-duration stay of an American astronaut. The payload was flown to the station in April 1995 on Progress 227, a Russian supply ship. The Greenhouse 1 experiment was originally scheduled to be conducted along with the first Incubator experiment, but it was canceled because of repeated launch slips of the Russian vessel that would bring it to Mir. Only on-orbit facility modifications to the plant hardware were performed during that time.

STS-71

The historic STS-71 mission, the first docking of the U.S. Space Shuttle with Mir, was launched on Atlantis on June 27, 1995, from Kennedy Space Center. Atlantis carried the Spacelab module as well as a new orbiter docking system for connecting to Mir. During the ascent phase of the mission, the Shuttle flew seven crew members, including two Russian cosmonauts to replace the crew already on Mir. STS-71 marked the first time since the Apollo-Soyuz Test Project in July 1975 that Americans and Russians met in space.

The primary mission objectives were to transfer equipment, biomedical data, and specimens between the Shuttle and Mir, and to replace the Mir 18 crew, which had been onboard the station for more than 100 days. A number of microgravity and life sciences investigations were also flown to Mir on the STS-71 mission.

The launch of Atlantis had to be precisely timed in order for the Shuttle to rendezvous and dock with Mir. During the first three days of the mission, the Shuttle thrusters were fired periodically in order to bring it gradually to a position eight nautical miles behind Mir in its orbital flight. Mission control centers in Houston and Moscow monitored the complex rendezvous maneuvers of the two massive spacecraft. The crews of Atlantis and Mir were in contact by means of air-to-air radio during the final approach stage. Atlantis docked with Mir on the fourth day of the STS-71 mission and remained docked for nearly five days. During that period, the two Russians and one American onboard Mir conducted joint investigations with the Shuttle crew. On the tenth day of the mission, the Shuttle undocked from Mir and returned to Earth, carrying the samples from the first Incubator experiment. During the descent phase of the mission, Atlantis returned with an eight-member crew, including the three Mir 18 crew members.

The Mir 19 mission began with the undocking of Atlantis from Mir. Atlantis left behind the two cosmonauts who were to man Mir and several science experiments that were to be conducted before the docking of STS-74. These experiments included one managed by Ames Research Center, called Greenhouse 1, a joint project with Utah State University and the Institute of Biomedical Problems (IMBP) in Moscow.

After the departure of STS-71, a continuation of the Incubator experiment was delivered to Mir by another Russian transport vehicle. Incubator 1 and 2 were conducted on the Mir 18 and 19 missions along with the Greenhouse 1 experiment brought onboard by STS-71. Biological samples and data collected during Mir 19 were returned to Earth on STS-74. Engineering and operational experience gained from the STS-71 mission impacted planning for the STS-74 mission.

STS-74

Atlantis docked for a second time with Mir for the eight-day STS-74 mission, launched on November 12, 1995. The five-member crew included an astronaut from the Canadian Space Agency.

The primary objectives of STS-74 were to again successfully dock with Mir, to permanently install the Russian-built docking module onto the Mir Kristall module, and to conduct joint NASA/Russian Space Agency scientific experiments.

Atlantis docked with Mir on the fourth day of the mission and remained docked for three days. While docked, Shuttle and Mir crews performed collaborative science investigations. They also transferred supplies, equipment, and experiment materials to Mir for the upcoming Mir 20 mission. Experiment samples and data from the Mir 18 and 19 missions, equipment for repair and analysis, and products manufactured on the station were transferred from Mir to the Shuttle. STS-74 brought back quail embryos incubated and chemically fixed during the Mir 18 and 19 missions as well as plant samples and hardware from the Greenhouse 1 experiment.

Life Sciences Research Objectives

Earlier Russian avian embryology experiments on Mir showed that embryonic development and hatching do occur in space, but that the number of hatches is lower than on Earth. The Incubator experiment was designed to elucidate the nature of space flight effects on avian embryos and to determine whether gravity is required for normal avian embryogenesis and development. Studying such processes in birds allows researchers to better understand the effects that microgravity might have on human reproductive capabilities.

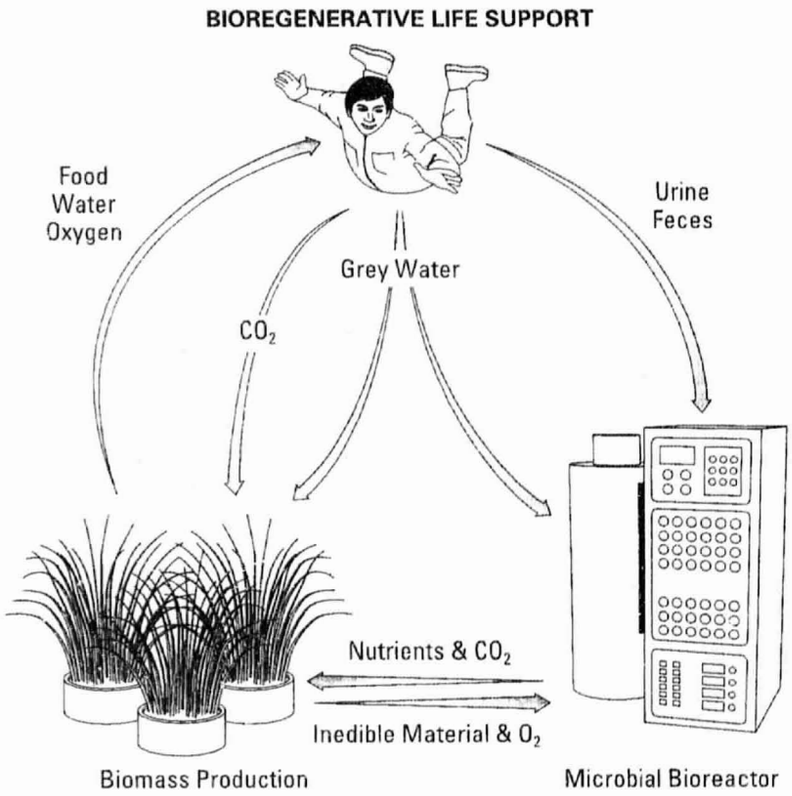

Figure 17. Bioregenerative life support systems represent a likely method for recycling waste and providing food, water, and oxygen on long-duration space flights.

The Greenhouse experiment studied plant growth in space. Understanding how plants respond to space flight is important for conducting long-duration, manned space missions. As mission duration increases, it will become infeasible, for reasons of both weight and storage capacity, to carry sufficient food, water, and air supplies at launch. A solution to the problem is to develop recycling strategies using crop plants to generate food, water, and oxygen and remove carbon dioxide and excess humidity from the enclosed spacecraft environment (Fig. 17). The Greenhouse experiment focused specifically on how plants develop, metabolize, reproduce, and yield in microgravity. The experiment also served as an evaluation of the plant growth facilities on Mir. Unlike in previous U.S. space flight experiments, the plants brought to Mir on the STS-71 mission were allowed time to complete an entire life cycle in the space environment.

Life Sciences Payload

Organisms

Both Incubator experiments used fertilized eggs of the Japanese quail (*Coturnix coturnix japonica*), provided by IMBP. The quail is a widely used model organism in the study of embryogenesis. In addition, quail have been considered as a potential supplemental food source for long-duration missions, since they are smaller than the chicken and have a higher meat yield.

The Greenhouse 1 experiment used wheat plants (*Triticum aestivum*) of the Super-Dwarf variety. Wheat is an important agricultural crop and a likely candidate for a plant-based life support system to be used on long-duration missions.

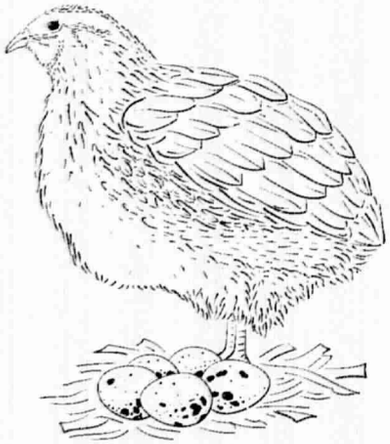

Japanese Quail (*Coturnix coturnix japonica*)

Hardware

Quail eggs were kept in a Russian-designed incubator with a capacity of up to 80 eggs (Fig. 18). The incubator allows control of both temperature and humidity. A glove bag was provided for performing the fixations. Fixation bags used in the experiment contained either paraformaldehyde or an ethanol/glycerol solution. Since fixed eggs could be kept at ambient temperature, no refrigerator/freezer was needed.

Wheat plants were grown in the Svet, a plant-growth facility jointly developed by Russia and Bulgaria and sent to Mir in 1990. It comprises a plant growth chamber, a root module, a light unit, and a control unit. The Svet can hold about 100 wheat seedlings and accommodate plants that are up to 30 cm (16 inches) tall. Environmental monitoring systems developed by Utah State University were added to the Svet. Fluorescent lamps provide light that is about one-twelfth as intense as sunlight—an amount that is marginally sufficient for adequate plant growth within the Svet. Wheat plants are grown in a solid zeolite substrate containing nutrients. Water is injected into the substrate material and transferred to the wheat seeds by means of a wick system. The U.S. environmental monitoring system, named the Gas Exchange Monitoring System, collects data on CO_2, and water vapor in air entering and leaving the Svet, allowing calculation of photosynthesis, respiration, and transpiration.

A harvest kit was used to collect plant samples from the Svet. The kit includes tools such as forceps, scissors, microscissors, and dissecting instruments. A portable glovebag, which prevents hazardous materials from coming into contact with the crew environment, was used to fix specimen samples. Preservatives for fixing samples were contained in a fixative kit, which includes chemical fixative solution in triple-sealed bags.

Operations

Preflight

For both Incubator experiments, the quail eggs were collected from IMBP over a period of days before flight and hand-carried to the launch site at ambient temperature. The eggs were then placed in a foam-lined metal box for transport to Mir on the Progress vessel. Two other groups of fertilized quail eggs from the same parents were used as controls. The asynchronous control eggs received the same pre-incubation time and temperature as the flight eggs. They were incubated in hardware similar to that on Mir, at similar temperatures. A laboratory vivarium control group also received the same

Wheat (*Triticum aestivum*)

pre-incubation time and temperature as the flight eggs but were incubated in a commercial incubator.

The experiment plants for Greenhouse 1 were sent to Mir as seeds attached to a strip of plastic. A delayed synchronous ground control was conducted with temperatures, CO_2 levels, light, and other environmental factors as close as possible to those reported from Mir.

Inflight

For both Incubator experiments, eggs were chemically fixed at various times to allow observation of different stages of development. The first set of eggs was fixed seven days after being placed in the incubator.

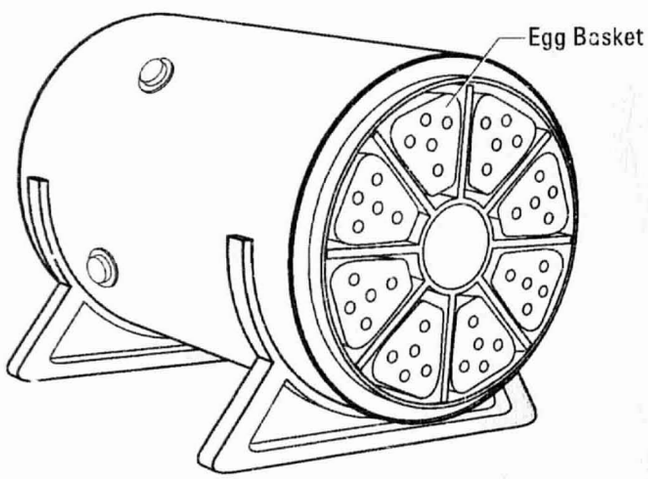

Figure 18. The Russian-built Incubator onboard Mir can provide temperature and humidity control for 80 avian eggs.

Three more sets of eggs were fixed, at three intervals of three days each after the first fixation. Although the experiments remained on Mir for three months, the actual duration of each experiment was 16 days, after which fixed eggs were stored for return to Earth. The fixed samples were returned to Earth on the STS-71 and STS-74 missions.

Both control groups were fixed at the same time in the same solutions as the flight eggs.

Planting of wheat seed occurred after STS-71 undocked from Mir. During Mir 19, crew members monitored plant development by making daily observations and taking photographs. They also collected samples of plants at five different stages. The duration of the experiment was 90 days, from August to November. All samples were returned to Earth on STS-74 for postflight analysis.

Postflight

After the Shuttle landed, fixed quail egg and plant samples were distributed to the investigators.

Results

Quail Eggs Study

During Mir18/NASA 1, many of the embryos showed developmental abnormalities, and the mortality rate during the incubation period was high. Because of the possibility that unplanned temperature fluctuations in the incubator were the cause of the high mortality, none of the experiment objectives were satisfied by the data. During Mir 19, inflight development progressed to a further stage than in the Mir 18 experiment, but the fluctuation in incubator temperatures again could not be

ruled out as the cause of mortality. No abnormalities in gross morphology were detected in the embryos. A third replicate of the experiment, performed during NASA 2 between STS-76 in March and STS-79 in September 1996, produced more viable embryos.

Wheat Study

Wheat plants grew for almost all of the 90 days of the experiment but exhibited poor growth. Inhibited growth was caused by the failure of four out of the six fluorescent lamps in the plant growth chamber and erratic moisture conditions in the soil. An unexpected result of the experiment was that the plants remained vegetative throughout the 90 days, never producing flowers in the form of wheat heads. Control plants were similar in appearance to the space plants but produced sterile (no seeds) heads. The lessons learned in this experiment were applied in 1996/97 by the same team with new equipment, and the Super-Dwarf wheat plants produced lush growth and about 280 wheat heads. However, all heads proved to be sterile. Ground studies have demonstrated that ethylene in the Mir cabin atmosphere caused the sterility. A subsequent Greenhouse experiment, conducted in 1997, which used mustard plant, produced the first successful seed-to-seed plant cycle in space. Another study on Mir that began in 1998, not sponsored by Ames Research Center, used Apogee, a strain of wheat more resistant to ethylene than Super-Dwarf wheat. The effort succeeded in producing some fertile wheat seeds.

Additional Reading

NASA. STS-71 Press Kit, June 1995. In NASA Space Shuttle Launches Web site. http://www.ksc.nasa.gov/shuttle/missions/missions.html.

NASA. STS-74 Press Kit, November 1995. In NASA Space Shuttle Launches Web site. http://www.ksc.nasa.gov/shuttle/missions/missions.html.

The Cosmos Program and Payloads

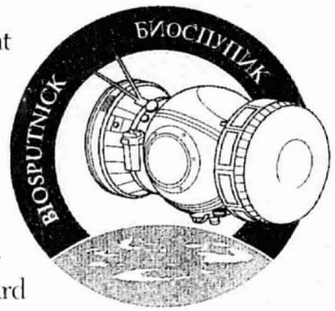

NASA has been an active participant in the Cosmos biosatellite program since 1975. The Soviet/Russian flight series, which began in 1966, is dedicated to biological experimentation using unmanned, Earth-orbiting satellites. Between 1975 and 1990, the agency participated in seven missions flown aboard the Russian Cosmos spacecraft. In 1992, NASA cooperated with the Russian Space Agency in flying experiments on the Cosmos 2229 mission, referred to by the Russians as Bion 10.

Experiments conducted on Cosmos differ from those conducted on the Space Shuttle because the Cosmos spacecraft is an unmanned biosatellite. This means that all experiment operations, spacecraft subsystems, and life support systems for experiment subjects must be automated. Experiment materials and subjects cannot be directly manipulated during the flight, and viewing is possible only by means of video. Malfunctioning hardware cannot be repaired during a mission, and life support equipment cannot be manually regulated. These limitations place special demands for quality and reliability of flight hardware and allow the experiments somewhat less flexibility than those flown on manned vehicles.

There are, however, significant advantages to conducting life sciences experiments on unmanned spacecraft. The cost of flying an unmanned mission is markedly less than that of a manned mission.

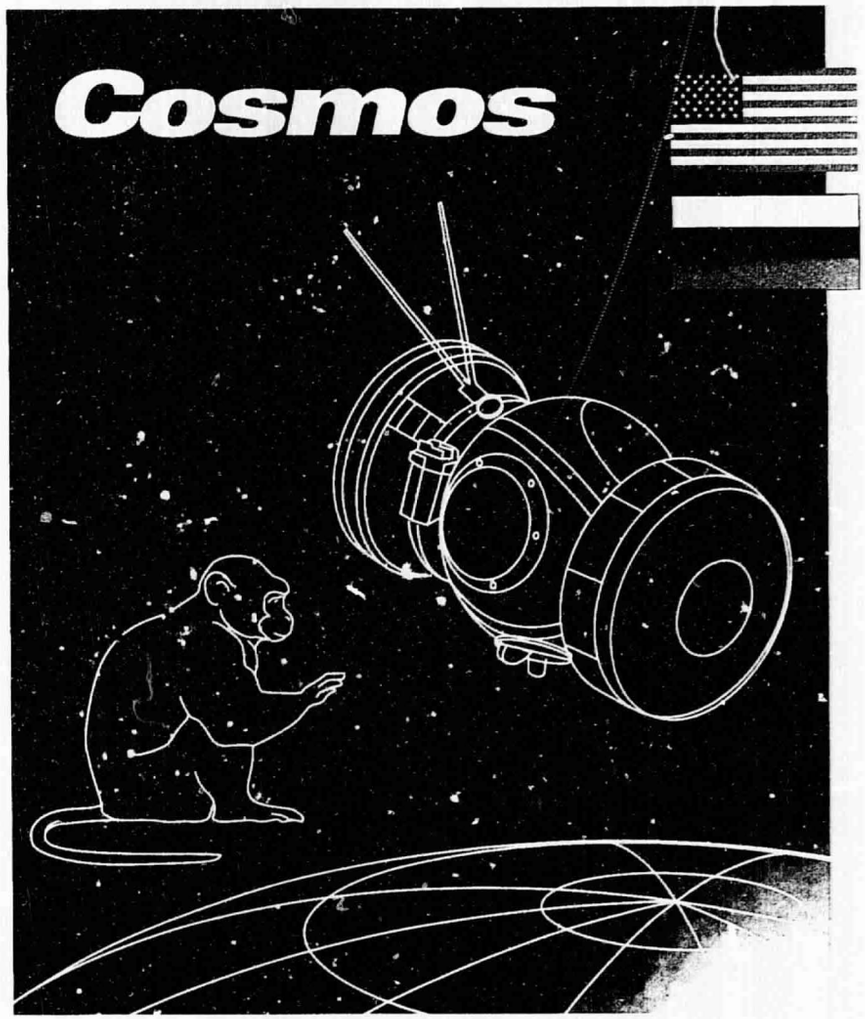

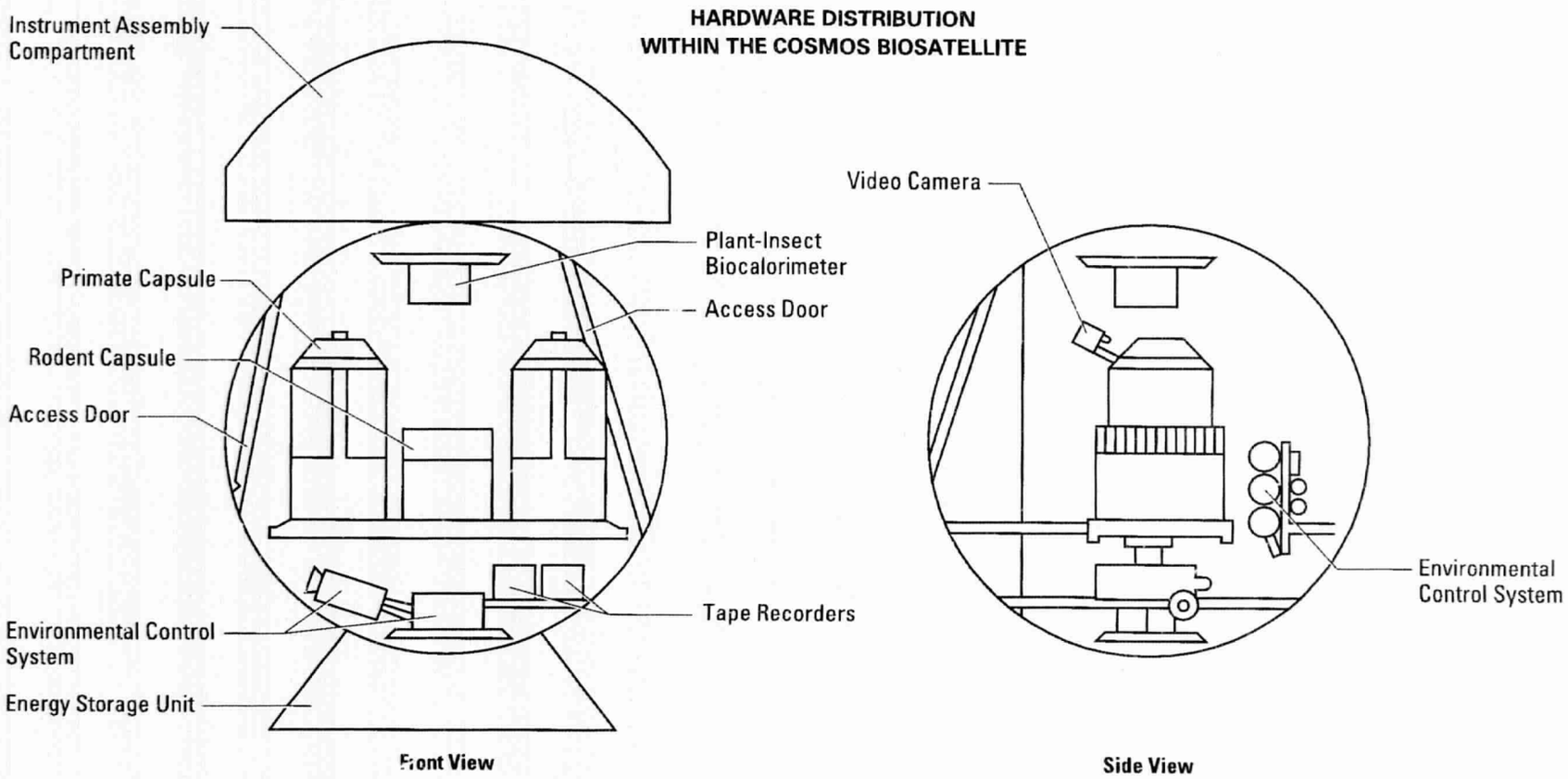

Figure 19. Schematic of the Cosmos biosatellite interior.

Hardware can be built relatively inexpensively, using a wider range of materials, without jeopardizing crew safety. Similarly, missions can often be extended or shortened to maximize science return and animal welfare, since crew requirements do not have to be considered. Also, they allow mission management to control the launch date and thereby allow payload readiness to be a significant factor.

The biosatellite is an unmanned space vehicle designed for conducting biological experiments in space. It is composed of three compartments: the landing module, the instrument assembly compartment, and a hermetically sealed unit that contains additional chemical sources of energy (Fig. 19). The landing module is a complex, autonomous spherical compartment that can house plants, animals, and cell cultures. The biosatellite is launched by rocket from the Plesetsk cosmodrome, located in Russia above the Arctic Circle. A detailed description of the biosatellite is included in *Life into Space 1965–1990*.

One Cosmos biosatellite mission was flown during the 1991–1995 period: Cosmos 2229, which flew in 1992.

PAYLOAD PROFILE: COSMOS 2229 (BION 10)

Mission Duration: 12 days **Date:** December 29, 1992–January 10, 1993

Life Science Research Objectives

- To study the effects of space flight on primate metabolism and circadian rhythms
- To study the effects of space flight on primate musculoskeletal, neurovestibular, and immune systems

Life Science Investigations

- Bone Physiology (C2229-1, 2, 3)
- Chronobiology (C2229-4)
- Endocrinology (C2229- 5)
- Immunology (C2229-6)
- Metabolism and Nutrition (C2229-7)
- Muscle Physiology (C2229-8, 9)
- Neurophysiology (C2229-10, 11, 12)

Organisms Studied

- *Macaca mulatta* (rhesus monkey)

Flight Hardware

- Primate Bios and associated Russian hardware
- Head Electronics Assembly
- Angular rate sensors
- Tendon force sensors
- EMG sensors
- Circadian Rhythm/Temperature Regulation (CR/T) hardware
- Preamplifiers and amplifiers

Cosmos 2229

Mission Overview

The Cosmos 2229 biosatellite was launched on a Soyuz rocket from the Plesetsk cosmodrome in Russia on December 29, 1992. After 12 days in Earth orbit, the biosatellite landed about 100 km north of the city of Karaganda in Kazakhstan on January 10, 1993. Cosmos 2229 was the eighth consecutive mission in the series with U.S. experiments onboard.

Russian and American scientists and engineers worked together more closely on Cosmos 2229 than on any previous space mission. NASA developed several flight hardware units for the mission, trained Russian engineers and technicians to operate the hardware, and in collaboration with its Russian counterparts, developed postflight procedures. The Russians provided the spacecraft environmental control systems and animal life support equipment for the experiments and were responsible for mission management, preflight training and instrumentation of animal subjects, primary support of postflight controls, and data management and distribution.

Cosmos 2229 was an international venture, accommodating experiments conducted by scientists from Russia, the U.S., Germany, France, Canada, China, the Netherlands, Lithuania, Ukraine, Uzbekistan, and the European Space Agency (ESA). One of the objectives of the mission was to conduct experiments within ESA's Biobox facility, a fully automated, programmable incubator for research in gravitational biology. Several experiments were also conducted outside the Biobox facility. The biosatellite carried a variety of organisms, including two rhesus monkeys, Spanish newts, fruit flies, desert darkling beetles, silkworm larvae, clawed frog eggs, and animal and plant cell cultures. Scientists sponsored by Ames Research Center (ARC) conducted 13 life sciences experiments during the mission, using the two rhesus monkeys as experiment subjects.

Life Sciences Research Objectives

The NASA experiments were designed to study various biological systems likely to be affected by the space environment. Bone and muscle are used by many terrestrial organisms to maintain their body positions relative to gravity. Microgravity has been found to cause significant changes in these body components in both monkeys and humans. To gather further data in this area, Cosmos 2229 experiments studied bone strength, density, and structure, bone biochemistry, calcium metabolism, and neuromuscular function. Experiments on previous Cosmos and several Spacelab missions have indicated that the neurovestibular system is affected by microgravity. Since the ability to perform coordinated movements is of crucial importance for astronauts, neurovestibular studies are a high priority. Three of the investigations on Cosmos 2229 addressed this area. Immune and metabolic changes, as well as the way that circadian rhythms of brain, skin, and body temperatures change during space flight, were also studied.

U.S. Life Sciences Payload

Organisms

Two rhesus monkeys (*Macaca mulatta*) were used as experimental subjects on the mission, as on four previous Cosmos missions. The subjects, named Ivasha and Krosh, were approximately three years old at launch.

Rhesus Monkey (*Macaca mulatta*)

Hardware

Hardware used for the NASA experiments was similar to that used on Cosmos 1514, Cosmos 1667, Cosmos 1887, and Cosmos 2044, although modifications and upgrades were made for this mission. The life support equipment and some of the experiment hardware were

supplied by Russian companies, primarily SKTB Biophyspribor. ARC developed and provided several hardware elements, including sensors and a signal processor/data collection system for the circadian rhythm and temperature regulation studies, tendon force and EMG sensors for the muscle studies, and head motion velocity sensors, amplifiers, and preamplifiers for the neurovestibular studies.

The flight monkeys were housed in two Primate-Bios capsules within the Cosmos spacecraft landing module. The capsules, each containing life support and experiment equipment, are oriented within the spacecraft so that the monkeys can view each other. Couches inside the capsules support and confine the monkeys and provide adequate cushioning when the capsule impacts the ground at landing. A light-weight bib prevents the monkeys from disengaging leads emerging from the implanted sensors. Unidirectional air flow moves excreta toward a centrifugal collector beneath each couch. Monkeys can obtain juice and food, in paste form, from dispensers located in each capsule by biting on switches in the delivery tubes. Primate access to the dispensers can be controlled remotely from the ground. A video camera in each capsule monitors animal behavior during flight.

A Psychomotor Test System (PTS) installed in each capsule measures behavioral and vestibular parameters and provides environmental enrichment for the monkeys. The display screen presents task stimuli to which the monkeys are trained to respond. The system also includes a hand lever, foot lever, and touch screen for monkeys to give a correct response, depending on the type of stimulus.

Improvements made to the hardware for this mission were designed to increase the quality of life support data collected. The inflight data recording system was updated so that high-quality brain and neuromuscular recordings could be obtained. The monkey feeder system was improved, and a backup feeder was added to reduce the risk of losing science data in case of feeder malfunctions. Modifications in the monkey restraint system permitted increased arm movement. The neurovestibular data acquisition system was significantly modified through a joint U.S.–Russian development effort, allowing a greater number of parameters to be recorded inflight.

Several pieces of ground-based hardware were used for extensive pre- and postflight testing. One vestibular experiment measured changes in ocular counter-rolling and the vestibulo-ocular reflex using a four-axis vestibular and optokinetic rotator. The rotator is surrounded by an optokinetic sphere with vertical black and white stripes on its inner surface. The primate couch, attached to the rotational axis of a C gimbal (a device that allows an object to incline in any direction) can be fixed in positions about the subject's x, y, and z axes. This arrangement allows the rotator to tilt in any position while the subject is pitched or rolled and stimulated visually by the optokinetic sphere.

Another vestibular experiment used a multi-axis rotator, which can rotate a monkey along three different axes. The rotator allows measurement of eye position, vestibular nuclei response, and vestibular primary afferent responses.

The remaining vestibular experiment used a Portable Linear Sled (PLS) to take vestibular measurements made during horizontal and vertical oscillations of specified frequency and sinusoidal acceleration (Fig. 20). The test subject is placed into a light-tight Specimen Test Container (STC) that travels on air bearings along ceramic rails of the sled and provides vibration-free motion. The STC is gimballed to allow yaw, pitch, or roll stimulation of each monkey.

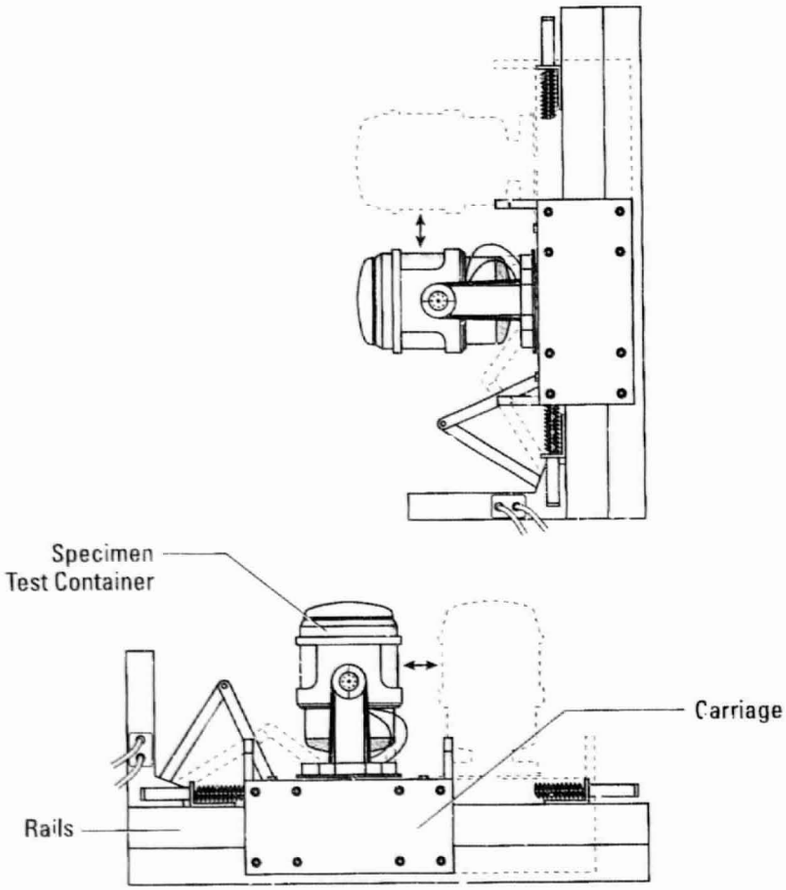

Figure 20. The Portable Linear Sled is designed to provide neurovestibular stimulation through vibration-free oscillations, horizontally and vertically.

The bone experiments took pre- and postflight measurements of tibial bone strength using the Mechanical Response Tissue Analyzer (MRTA). A NASA-modified version of a commercial system, the MRTA uses a low-frequency vibratory stimulus to assess bone strength noninvasively.

The metabolism study used a Doubly Labeled Water Kit, containing $^{2}H_{2}{}^{18}O$, to measure energy expenditure. No flight hardware or inflight monitoring was required for this experiment.

Operations

Preflight

Training and selection of monkeys for the mission began a year and a half prior to flight. Candidate monkeys were initially selected after extensive health evaluations. Monkeys in the flight candidate pool were acclimated to couch confinement and enclosure within the Primate-Bios capsule. They were also trained to obtain food and juice from automatic dispensers and to carry out a series of performance tasks using the PTS.

About four and a half months before flight, 14 monkeys were each implanted with sensors and electrodes for circadian rhythm and temperature, neuromuscular, and neurovestibular data measurements. Preflight measurements were made using the PLS, the two rotators, the MRTA, and a commercial densitometer system, which uses dual-energy X-ray absorptiometry to measure bone mass and overall body composition.

Doubly labeled water was administered after collection of baseline urine samples. Baseline muscle biopsies were performed, and blood and bone marrow samples were taken.

Final selection of flight monkeys was based on health status, level of adaptation to flight hardware, level of training, ability to tolerate the

Space Life Sciences Hardware Development
Interview with James Connolly

James Connolly is Chief of the Payload and Facilities Engineering Branch of the Life Sciences Division at Ames Research Center (ARC). His engineering career with NASA began in 1961 with the development of instrumentation systems for research and development at ARC. His focus turned to life sciences in 1968 when he became involved in developing ground-based systems to support laboratory research. Since 1980, he has been supporting mainly life sciences flight hardware development. From 1986 to 1993, Connolly was the ARC project manager for the Cosmos biosatellite project, which involved development of experiment hardware for flight on Russian spacecraft.

When developing experiment hardware for space flight, engineers must satisfy many competing priorities. "One of the main priorities is to meet the investigator's requirements," said Connolly. While accommodating the science, other critical factors come into play, including subject welfare and crew safety.

Connolly has developed life sciences payload hardware for both the Space Shuttle and the Cosmos biosatellite and notes that, "The major difference is that you have a lot more paperwork on a Shuttle mission." Since the biosatellites did not carry human crews, there were fewer safety requirements and thus less formal documentation than for the Shuttle.

Hardware development durations are also different for the two spacecraft. For the Shuttle, development can take three to four years, while Cosmos took no more than one to one and a half years. According to Connolly, "One advantage that we saw in the Cosmos program, as compared to the Shuttle, was that we could acquire technology components, do proof-of-concept development of a system, fly it, and then transition it into a Shuttle mission if the opportunity presented itself."

The International Space Station poses new challenges. A major issue is developing hardware that will function for longer durations—90 days as opposed to the 14 to 16 days on Cosmos or the Shuttle. "There is a whole different set of maintenance issues that you have to deal with. On the Shuttle, we don't even consider changing out a filter. We have done some inflight refurbishment of water supplies and, of course, there were animal food change-outs that we dealt with in shorter flights," said Connolly.

"But I think a big issue for the Station is going to be waste containment. How do you deal with waste over an extended period? Other concerns are the need for greater hardware reliability and serviceability. Equipment will be left on the Station for long periods of time. It will need to be designed for minor maintenance and repair inflight. If hardware is going to be valuable on the Station, NASA can't be hauling it back and forth all the time."

In the years that Connolly has been involved with developing space flight hardware, he has seen a number of trends. "I'm in favor of as much automation as you can get," said Connolly. Automation allows consistency of operations and results and demands less crew time.

The use of off-the-shelf hardware, where appropriate, has been shown to reduce costs and save development time. "We've proved over and over again that we can use commercial hardware and make it safe and have it operate effectively in space for short-term missions," said Connolly. "If you take a very sophisticated commercially developed instrument, it would be foolish not to fly it if possible. If it can be made to tolerate launch vibration and work reliably in space think of all the instrument development time that will have been saved. And that will save a tremendous amount of resources."

acceleration force encountered during launch, and adequate functioning of implanted sensors. Seven fully trained monkeys with surgically implanted sensors were brought to Plesetsk three weeks before launch. Of the seven monkeys, two were finally selected as flight animals.

Inflight

A telemetric link between ground monitoring stations and the biosatellite permitted monitoring of spacecraft systems, the capsule environment, and some primate physiological parameters.

The monkeys were exposed to a light/dark cycle of 16 hours of light, alternating with eight hours of darkness. Vestibular tests conducted inflight included the Psychomotor Test, which monitored the monkeys' eye-tracking response to a semicircular array of programmed lights. A sensor attached to the skull cap of each monkey registered that a correct response had been made when the sensor was pointed directly at the light on the panel. Juice rewards were presented for correct responses. Incorrect responses resulted in a delay before the presentation of the next task.

During the flight, all equipment functioned normally. Relative humidity remained between 30 and 70 percent throughout, and barometric pressure was between 720 and 760 mm of mercury. Temperature within the capsule ranged from 20 to 26 °C on the first 9.5 days of flight. On the tenth day, the capsule became continuously exposed to the sun as a result of the flight orbit of the biosatellite. Solar heating combined with heat from the payload resulted in an increase in capsule temperature to 30 to 31.3 °C. One of the payload components, the ESA-developed Biobox, was shut off to ameliorate the problem. This situation negatively impacted ESA's science results. The temperature then returned to 27.7 °C within 12 hours.

Both monkeys remained in good health during flight. However, Ivasha developed space motion sickness during the first few days of flight, consuming smaller quantities of food and juice than necessary. To prevent Ivasha from becoming dehydrated, extra juice was made available by means of a ground command.

Postflight

The recovery team reached the capsule within 40 minutes of touchdown. The monkeys were recovered in good condition. Both were active and responsive to environmental stimuli. Ivasha had lost 13 percent of body weight during the flight, while Krosh had lost 5 percent. After preliminary examinations were completed, the monkeys were flown to Moscow to undergo further testing.

As in preflight operations, the Portable Linear Sled, the two rotators, the MRTA, and the densitometer were used to obtain postflight measurements. Muscle biopsies were performed, and blood, bone marrow, and urine samples were taken.

A flight simulation control study was conducted 45 days after recovery of the capsule, using the two flight animals and four additional monkeys (Table 14). For this simulation, the animals were maintained for 11.5 days in conditions similar to those that they had experienced during the mission.

Results

The results of the experiments indicated that the monkeys were affected in various ways by confinement as well as the space flight environment. An increase in serum calcium levels was noted immediately postflight. Changes observed in bone and muscle were compatible with

VARIABLES	Flight	Confinement	Vivarium Control
Number of Primates	2	6	2
Launch/ Recovery Stress	actual	none	none
G-Force	micro-G	1 G	1 G
Food Available	500g/animal/day	500g/animal/day	500g/animal/day
Housing	individual capsules	individual capsules	individual cages
Environment	spacecraft conditions	simulated spacecraft conditions	standard lab conditions

Table 14. Flight and Control Groups for Cosmos 2229 Primates.

those observed in bed rest studies and space flight experiments on human subjects. Bone loss was not significant during this short-duration flight. Bone formation, however, appeared to be increased during the period after flight, when the monkeys were able to walk. Some lean tissue loss was observed during the flight. This loss was reversed rapidly during the postflight period. Other effects noted in the monkeys included vestibular and muscular changes and alterations in temperature regulation, metabolism, and circadian timing. Immunological function was also found to be decreased after the flight.

Additional Reading

Connolly, James P., Michael G. Skidmore, and Denice A. Helwig. *Final Reports of the U.S. Experiments Flown on the Russian Biosatellite Cosmos 2229.* NASA TM-110439, April 1997.

European Space Agency. The Euro/Russian Bion 10 Mission Completed. ESA Press Release Nr. 03.93, Paris, January 19, 1993. Contained in the European Space Agency Web site. http://subs.esa.int: 8330/frame/press.html.

5

Post-1995 Missions and Payloads

The high level of space life sciences research activity seen in the 1991–1995 period continued through 1996 and then began to taper off. This decline in the number of life sciences payloads is attributable to several factors: the close out of the Cosmos/Bion program in 1997, the end of the planned NASA/Mir collaboration in 1998, the retirement of Spacelab, and the requirement for Space Shuttle flights to conduct assembly of the International Space Station (ISS) beginning in late 1998. Flight experimentation should again pick up as ISS assembly reaches completion in the first few years of the twenty-first century.

The Space Shuttle

Following 1995, research on the Space Shuttle continued to thrive. The period leading up to the first assembly flights for the ISS saw the continuation of many collaborative projects, with both commercial partners and other government agencies. Four additional payloads in the National Institutes of Health Cells series and two in the National Institutes of Health Rodents series were flown. NASA and its collaborative partners continued to develop new hardware, including a nursing facility for neonate rats. Additional Spacelab missions incorporating life science experiments were flown in 1996 and 1998. The first, Life and Microgravity Spacelab, also included experiments in materials, combustion, and other microgravity sciences. The second, Neurolab, was dedicated entirely to space neuroscience.

The NASA/Mir program also provided opportunities for research on the Shuttle. Along with ferrying American experiments to and from the station, the Shuttle carried a European Space Agency (ESA) Biorack on the docking missions, which allowed for short-term research to be conducted during the flights. A variety of microbiology, cell and molecular, and plant biology experiments were performed, with the opportunity for repeated flights of the experiments to expand data sets.

With STS-88, the first in the series of ISS assembly flights, space life sciences research on the Shuttle entered a new phase. As most of the crew time on these flights is required for assembly activity, minimal time is available to monitor or assist with experiments. A few assembly missions, called Utilization Flights (UF), will allow for some small payloads to be flown. These payloads will remain onboard the Shuttle for the duration of the flight. They will not be transferred to the ISS. The early Utilization Flights will be verification missions, to test the hardware designed for more permanent residence on the Station. UF-1, the first

of these flights, currently scheduled for late 2001, will fly a plant biology facility called the Biomass Production System and an Avian Development Facility. No investigators will be chosen for inflight experiments, but a biospecimen sharing program will distribute tissue to interested investigators postflight. Ames Research Center will also participate in UF-3, flying the Cell Culture Unit and an ESA-developed cell culture module called the Modular Cultivation System, for which payloads are still in development.

However, not all future Shuttle flights will be Utilization Flights. The STS-93 mission, in 1999, to deploy the Advanced X-ray Astrophysics Facility, will also carry a new collaborative life sciences payload, National Institutes of Health Biology 1 (NIH.B1), which will study the effects of space flight on neural development in Drosophila (fruit flies). STS-107, scheduled for late 2000, will carry a SPACEHAB module and many life sciences experiments. Experiments currently planned for the mission will use the Aquatic Research Facility, Animal Enclosure Modules, a Cell Culture Module, BRIC hardware, and the Biopack, an ESA hardware item to be used in a microbiology study.

The future of the Shuttle is still under debate. In 1997, NASA authorized a slate of design improvements for the orbiter fleet, mostly in preparation for ISS assembly. The last of these upgrades will be implemented in time for the flight of STS-92 in early 2000. A number of safety improvements are also scheduled, including improved protection against orbital debris. Currently, plans for further performance upgrades are under evaluation, as NASA decides whether or not the next generation of reusable space transport vehicles will be derived from the Shuttle design. Several other designs are under development and consideration. However, as long as NASA continues to fly short-term missions, there will be opportunities for life sciences research onboard, and with the assembly of the first laboratory modules of the ISS, more opportunities will be available for long-term microgravity research than ever before.

NASA/Mir Phase 1B

By the end of 1998, the entire NASA/Mir program had resulted in nine dockings of the Space Shuttle with the Mir station and seven extended stays of an American astronaut on Mir, logging a total of 26 months in orbit. In contrast, the Space Shuttle program required over 12 years and 60 Shuttle flights to accumulate a year of astronaut orbit time.

Phase 1B of the program, which began in March 1996, was characterized by a constant NASA presence on the Russian station. Six different astronauts resided on Mir for extended periods of time. Shannon Lucid, the first astronaut to live on Mir during Phase 1B, broke the record for the longest continuous American residence in space, orbiting the Earth for 188 days and travelling 75.2 million miles. The Shuttle docked with Mir on seven missions during this period: STS-76 and STS-79 in 1996; STS-81, STS-84, and STS-86 in 1997; and STS-89 and STS-91 in 1998.

During the Phase 1B missions, the Shuttle, Mir, and Russian vehicles continued to serve as test beds for activities that would later be applied to assembling and operating the ISS. These activities included command and control of station activity, resupply of fuel and air, crew exchange, extravehicular activity, robotics, maintenance, damage control, emergency return, rendezvous, and docking. Russian Space Agency (RSA) and NASA resources were also used to improve and expand the existing Mir station. The last Russian Mir crew left the station in 1999, and Mir is scheduled to be removed from orbit in early 2000, unless private funding can be found. RSA space station resources will then be transferred to the ISS.

Many scientific studies were conducted during Phase 1B, in the areas of Fundamental Biology, Human Life Sciences, Advanced Technology, Microgravity Research, International Space Station Risk Mitigation, Earth Sciences, and Space Sciences. In the area of life sciences, researchers conducted fundamental biology studies on development, circadian rhythms, plant growth, and radiation effects, including replications of the Greenhouse and Incubator experiments performed during Phase 1A. Other studies investigated the effects of long-term space flight on crew health and body function, and what conditions were necessary to create a habitable environment for the crew. Scientists and engineers collected data on environmental parameters, such as radiation, contamination, and air purity on the station that can be used in designing the environment of the ISS. Measures to counter the adverse consequences of microgravity and cosmic radiation were tested. NASA/Mir also presented an opportunity to conduct research on life support technologies, such as oxygen generation and processing of water and urine.

The program ended in June 1998, when STS-91 returned from its docking with the station. The 14 fundamental biology experiments performed between March 1996 and the return of the final docking mission resulted in much data and experience in the performance of long-term space life sciences studies.

Unmanned Biosatellites

In addition to conducting research on the Shuttle, NASA participated in the Russian Bion 11 mission. A continuation of the Cosmos biosatellite program, Bion 11 marked a shift in the basis of NASA participation. The previous Cosmos missions had been conducted under cooperative agreements between the Soviet/Russian government and participating countries were accommodated at no cost, as possible within the overall mission goals. Bion 11 was conducted under contractual agreement, a relatively new concept in the former Soviet bloc, specifying each participant's costs, obligations, and access to payload space and resulting science data. Launched in 1996, the mission followed in the footsteps of recent Cosmos flights that used rhesus monkeys as experimental subjects. CNES, the French space agency, was invited to participate in the NASA portion of the payload. NASA and CNES had conducted a lengthy collaboration in preparation for the Spacelab Life Sciences 3 (SLS-3) payload named the Rhesus Project, which had been scheduled to fly in 1995. The STS launch on which SLS-3 was to fly was cancelled for budgetary reasons, leaving no flight opportunities available on NASA launch vehicles. However, some of the SLS-3 science was transferred to the Bion 11 mission. Shortly after completion of the mission, the ninth since 1975, NASA closed out its participation in the Cosmos/Bion program.

There has been some discussion within NASA regarding the development of a new unmanned biosatellite program for conducting life and microgravity sciences experiments. The dearth of flight opportunities during the ISS assembly period would make any new flight platform welcome among the science community, but no specific plans have been announced.

International Space Station (ISS)

Since the first formal agreements were signed in 1988, the ISS has grown into one of the largest cooperative science projects ever attempted. The venture currently includes 16 partner nations: the United States, Russia, Canada, Japan, Brazil, and 11 members of the European Space

Agency (Belgium, Denmark, France, Germany, Italy, the Netherlands, Norway, Spain, Sweden, Switzerland, and the United Kingdom).

For the U.S. and Russia, the NASA/Mir program, also called ISS Phase 1, provided an important first step. NASA had previous experience with managing a space station during the Skylab program, but nothing comparable to Mir in terms of scope or longevity. During NASA/Mir, NASA received invaluable practice in operating a large-scale space station, as well as experience in international collaboration and long-term microgravity research.

The ISS will provide a continuous on-orbit platform for microgravity experiments (Fig. 21). Upon completion, the station will be over four times the size of the current Mir configuration with 60 times the electrical power, provided by more than an acre of solar panels. This huge store of solar energy will be needed to power the six research laboratories, one of which will be supplied by NASA. ESA will supply one research module, called the Columbus Orbital Facility. NASDA, the Japanese space agency, will supply the Japanese Experiment Module, which will include an exposed exterior platform for experiments and transport vehicles. The Centrifuge Accommodation Module, designed for life sciences research, will house the Gravitational Biology Facility and the Life Sciences Glovebox. This module will be owned by NASA, but it is being built by NASDA as part of an agreement to offset the costs for launching the Japanese Experiment Module. Finally, Russia will add two research modules, as well as early living quarters for the crew.

In addition to the six laboratories, the international partners will contribute a variety of other important equipment. The U.S. will provide solar panels, connecting nodes, and various other structural components, as well as systems for navigation, communications, ground operations, and launch-site processing. Development is under way on the Crew Return Vehicle, an emergency return vehicle capable of holding seven crew members. Russia will provide solar panels, service and docking modules, logistics transport vehicles, and a Soyuz spacecraft for crew return. Additional logistics transport vehicles will be supplied by Japan, and additional connecting nodes will be supplied by ESA. Canada will provide a 55-foot-long robotic arm, similar to the one currently used on the Shuttle for satellite deployment and retrieval, for assembly and maintenance of the completed station. Italy is building three pressurized Multi-Purpose Logistics Modules (MPLMs) that will carry equipment and experiments to and from the Station in the Shuttle cargo bay. The MPLMs are owned by NASA, but will be built by Italy in exchange for NASA research time on the Station.

Assembly of the Station began in late 1998 with the launch of the Zarya module. Built in Russia with U.S. funds, Zarya will serve as an unmanned space "tugboat," providing early propulsion, steering, and communications capabilities for the fledgling Station. As ISS assembly progresses, Zarya will function as a passageway and docking port. The first true assembly mission was STS-88 in December 1998, which brought the Unity connector module to Zarya. The crew performed three spacewalks to connect the two modules, the first in the series of extravehicular activities required to complete the Station.

A cargo flight in May 1999 (STS-96) brought supplies to the Station in preparation for the next assembly stage, connection of the Russian Service Module. Because of financial difficulties in the Russian Space Agency (RSA), launch of the Russian Service Module had slipped six to eight months behind schedule, as of May 1999. However, the ISS is still the priority for RSA in terms of space stations. Mir will be maintained

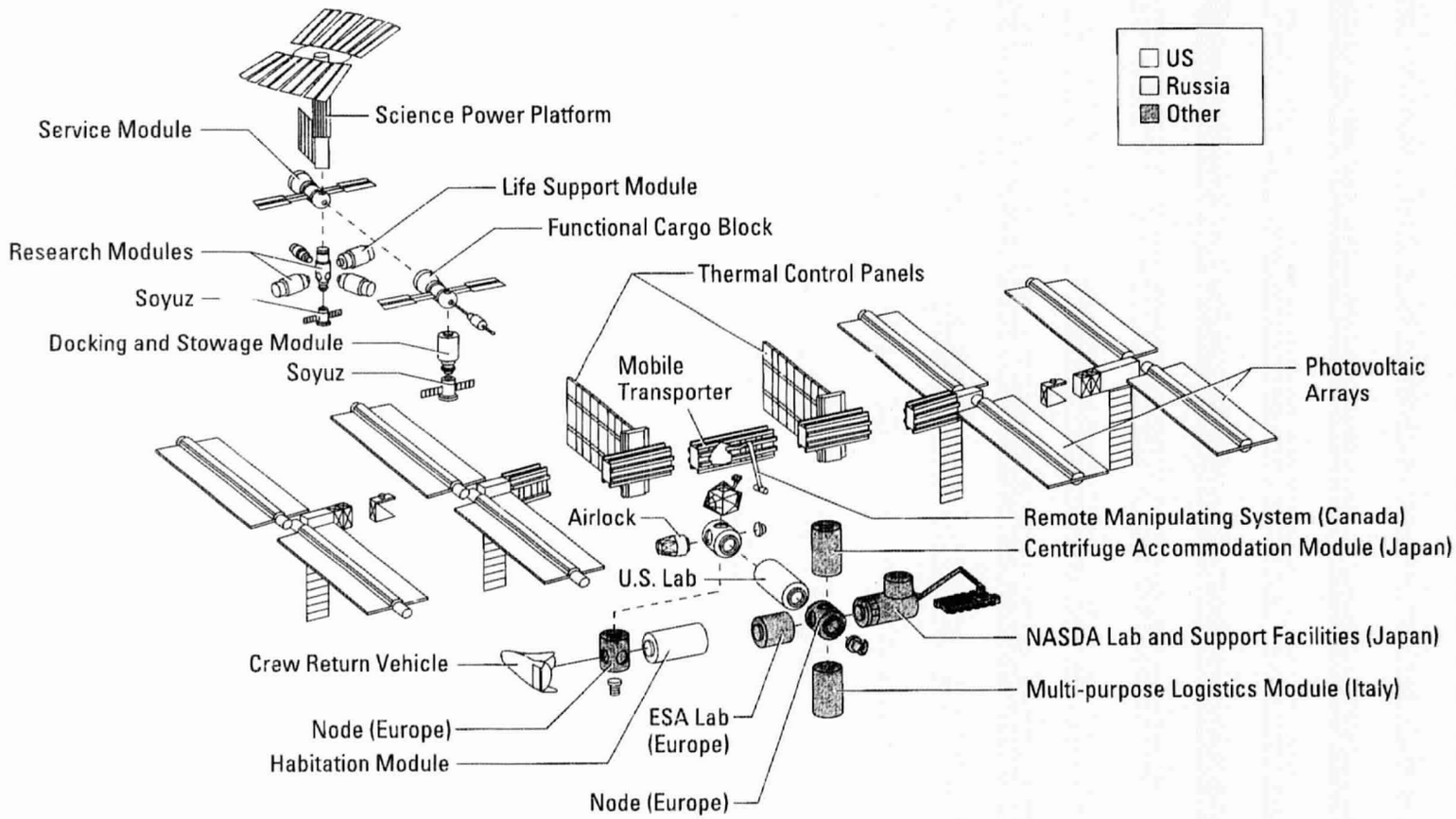

Figure 21. International Space Station and component contributors.

beyond its scheduled deorbit if commercial or private funding sources can be found. No modules were added to the ISS during the STS-96 mission, but a Russian-built crane was attached to make maneuvering easier during future assembly spacewalks. A total of 43 assembly missions using both U.S. and Russian spacecraft are planned to complete construction.

The first permanent crew is scheduled to arrive at the ISS in January 2000, after installation of the first solar panels, which will also prepare the Station for the installation of its first laboratory. The crew, composed of an American and two Russians, will remain on the Station for five months. During their stay, the first laboratory module, the Human Research Facility (HRF), will be brought to the Station, enabling long-term microgravity research to begin in the spring of 2000.

The HRF is the first of two major life sciences research facilities planned for the ISS. Developed by Johnson Space Center (JSC), the HRF will provide space and equipment to conduct research on humans in microgravity. Investigations in the HRF should provide scientists valuable results that will help determine how various physiological systems, and subsequently crew health and performance, are affected during long-duration stays on ISS. Results can also help scientists improve countermeasures to the negative effects of long-term space flight.

Ames Research Center (ARC) is building the Gravitational Biology Facility, which will allow scientists to study the effects of gravity (from microgravity to two times Earth gravity) and other aspects of space flight environments on a wide variety of specimens. Scientists will be able to monitor an organism's response to selectable gravity levels throughout its life cycle, even through multiple generations. The facility design is modular, consisting of sets of habitats designed to support specific specimen types, and host systems to provide support for the habitats. The host system complement consists of two Space Station racks to support habitats at the microgravity environment of the Station, a 2.5-m centrifuge to support habitats at selectable gravity levels, and a glovebox for conducting science protocols in the work space isolated from the cabin environment.

Habitats will provide controlled environments, nutrient delivery, waste management, and diagnostic measurements for resident organisms. They will have the capability of transmitting engineering and science data and receiving commands from the ground or on-orbit crew to control the experiments. The Space Station Biological Research Project (SSBRP) at ARC is developing four habitats under contract with U.S. industry. These include the Cell Culture Unit, the Plant Research Unit, the Advanced Animal Habitat for rodents, and an Egg Incubator. Two habitats are being developed through international agreements: the Aquatic Habitat by NASDA and the Insect Habitat by the Canadian Space Agency. The Insect and Egg Incubator Habitats will include internal centrifuges. The remaining habitats will use the 2.5-m centrifuge. A large amount of standard laboratory support equipment will also be available, including refrigerators, freezers, microscopes, mass measurement devices, and radiation dosimeters. Development of these items is divided between the Space Station Payloads Office at JSC and the SSBRP at ARC.

In addition to life sciences laboratories, facilities will be available for research in many other disciplines. Combustion science, fluid physics, and materials science are a few of the fields that have benefited from microgravity research in the past. Facilities on the Station will allow for long-term microgravity studies in these fields. The powerful vacuum supplied by space is far greater than any produced artificially and is another asset in materials processing research. The ISS will also provide

a base for remote imaging, both of Earth and space, for monitoring such diverse events as solar flares, the formation of distant galaxies, and climate conditions on Earth.

Many opportunities for medical research are unique to the microgravity environment of space. Growth of three-dimensional tissue cultures, impossible on Earth, can better replicate tissue found in the body. Culturing cells in microgravity allows for the formation of more life-like tissue samples. The Bioreactor, a rotating culture system developed to mimic the microgravity environment for the purposes of growing tissue cultures on Earth, will likely be improved by research on the ISS. The growth of protein crystals for X-ray crystallography is also hampered by Earth gravity. Crystal growth experiments on the Shuttle have produced high-quality crystals for over 30 proteins, which could not be grown on Earth at the quality or quantity needed for structural analysis. The ability to grow protein crystals and their value in subsequent drug development will be enhanced by ISS-based research.

With the completion of the ISS, the scientific world will enter a new phase in the utilization of space. Not only will research be conducted at a level never before possible, but the opportunities and need for collaboration will be greater than ever. The technology that will spin off from research aboard the Station will benefit all the international partners and continue to advance research on Earth.

Additional Reading

Berger, Brian. Study Advises Upgrades until Shuttle Is Replaced. *Space News*, June 14, 1999, p. 4.

NASA. A History of U.S. Space Stations. NASA Facts IS-1997-06-ISS009JSC, June 1997. http://spaceflight.nasa.gov/spacenews/factsheets/index.html.

NASA. Gravitational Biology Facility and Centrifuge Facility and the International Space Station. NASA Facts ARC-97-04, April 1997. http://spaceflight.nasa.gov/spacenews/factsheets/index.html.

NASA. International Space Station Human Research Facility. NASA Facts IS-1998-03-ISS015JSC, March 1998. http://spaceflight.nasa.gov/spacenews/factsheets/index.html.

NASA. The International Space Station: Benefits from the Shuttle-Mir Program. NASA Facts IS-1998-08-ISS010JSC, August 1998. http://spaceflight.nasa.gov/spacenews/factsheets/index.html.

NASA. The International Space Station: Improving Life on Earth and in Space. The NASA Research Plan. NASA (OLMSA), February 1998. http://www.hq.nasa.gov/office/olmsa/iss/index.htm.

NASA. The International Space Station: An Overview. NASA Facts IS-1999-06-ISS022, June 1999. http://spaceflight.nasa.gov/spacenews/factsheets/index.html.

Savage, P.D., G.C. Jahns, and T. Schnepp. Space Station Lessons Learned from NASA/Mir Fundamental Biology Research Program. *SAE Technical Paper* 981606, July 1998.

Savage, P.D., G.C. Jahns, V. Sytchev, P. Davies, D. Pletcher, R. Briggs, and R. Schaefer. Fundamental Biology Research during the NASA/Mir Science Program. *SAE Technical Paper* 951477, July 1995.

Shuttle Payload Profiles

Time between the execution of a space flight experiment and publication of results averages several years. Some investigators wait for a second flight of their experiment to gather more data or pool their information with another scientist. Detailed results from many experiments flown during the 1996–1998 period are, therefore, not yet available. In order to bring the reader more up-to-date, the Shuttle experiments flown during this period are represented in the following section as brief payload profiles. Similar to the profiles accompanying the 1991–1995 payload descriptions earlier in this volume, the following information is provided: major research objectives; names and affiliations of investigators; short notes on flight hardware and research subjects; and mission and payload highlights.

PAYLOAD PROFILE: NIH.C5/STS-72

Life Sciences Payload: National Institutes of Health Cells 5

Mission Duration: 9 days **Date:** January 11–20, 1996

Payload Location: Shuttle middeck

Life Science Research Objectives

- To confirm that cartilage calcification and cell differentiation proceed more slowly in cells cultured in microgravity than in 1 G
- To study microgravity-induced skeletal myofiber atrophy

Life Science Investigations

Bone Physiology

- Boskey, Adele (Hospital for Special Surgery), The Effects of Micro-Gravity on *In Vitro* Calcification

Muscle Physiology

- Vandenburgh, Herman (Miriam Hospital/Brown University School of Medicine), Effect of Space Travel on Skeletal Myofibers

Organisms Studied

- *Gallus gallus* (chicken) cells

Flight Hardware

- Space Tissue Loss-A (STL-A) Module

Mission Notes

- Crew included a mission specialist from NASDA, the Japanese space agency

Payload Notes

- A collaboration between NASA, NIH, and the Walter Reed Army Institute of Research
- Re-flight of the NIH.C2 payload, giving investigators a larger data set
- Because of hardware malfunction, STL-A module was never properly activated, resulting in minimal data obtained from the flight cultures

PAYLOAD PROFILE: NIH.R3/STS-72

Life Sciences Payload: National Institutes of Health Rodents 3

Mission Duration: 9 days **Date:** January 11–20, 1996

Payload Location: Shuttle middeck

Life Science Research Objectives

- To test the ability of the AEM Nursing Facility to serve as a life support system for nursing rat dams and neonates in preparation for the Neurolab payload on STS-90
- To conduct a pilot study to determine if lactating rat dams and pups are suitable for the experiments planned for Neurolab

Life Science Investigations

Hardware Verification

- Riley, Danny (Medical College of Wisconsin) and Kerry Walton (New York Medical Center), Rodent Dam/Neonate Animal Enclosure Module Nursing Facility Development Experiment

Organisms Studied

- *Rattus norvegicus* (rat) dams and pups

Flight Hardware

- Animal Enclosure Module (AEM) Nursing Facility

Mission Notes

- Crew included a mission specialist from NASDA, the Japanese space agency

Payload Notes

- A collaboration between NASA and NIH
- First flight of the Animal Enclosure Module (AEM) Nursing Facility
- First experiment with newborn rat pups
- Six of the 5-day-old, 19 of the 8-day-old, and all 20 of the 15-day-old neonates survived the flight
- Surviving flight animals were found to be in good condition

PAYLOAD PROFILE: BIORACK 1/STS-76

Life Sciences Payload: Biorack 1

Mission Duration: 9 days **Date:** March 22–31, 1996

Payload Location: SPACEHAB module/Shuttle middeck

Life Science Research Objectives

- To study the effects of microgravity on gene expression in bone cells, as well as bone formation and osteoblast growth
- To detect the effects of microgravity on cytoskeletal organization, signal transduction, gene expression, and maturation in hematopoietic cells
- To examine the effects of space radiation on both somatic and germ cells and the effects of microgravity on cellular repair

Life Science Investigations

Bone Physiology

- Hughes-Fulford, Millie (University of California, San Francisco), Microgravity Effects on Bone Cell Gene Expression

Cell and Molecular Biology

- Lewis, Marian (University of Alabama, Huntsville), Mechanisms of Gravity Sensing and Response in Hematopoietic Cells

Radiation Biology

- Nelson, Gregory (NASA Jet Propulsion Laboratory), Modification of Radiogenic Damage by Microgravity

Organisms Studied

- *Mus musculus* (mouse) bone cells
- *Homo sapiens* (human) cells
- *Caenorhabditis elegans* (nematode)

Flight Hardware

- Biorack

Mission Notes

- Third docking of Space Shuttle with Mir space station
- Flew first American woman astronaut (Lucid) to serve as a crew member on Mir station

Payload Notes

- Delivered two experiments to Mir to be conducted during the NASA 2 mission

PAYLOAD PROFILE: ARF-01/STS-77

Life Sciences Payload: Aquatic Research Facility 1

Mission Duration: 10 days **Date:** May 19–29, 1996

Payload Location: Shuttle middeck

Life Science Research Objectives

- To study the effects of microgravity on cytoskeletal organization and calcium metabolism during fertilization and early development in the sea urchin model system
- To study calcium-dependent sperm incorporation, calcium-triggered cortical granule exocytosis, membrane fusion, and cytoskeletal organization within eggs and embryos fertilized and cultured in space

Life Science Investigations

Developmental Biology

- Schatten, Heide (University of Wisconsin), Microgravity Effects during Fertilization, Cell Division, Development, and Calcium Metabolism in Sea Urchins

Organisms Studied

- *Lytechinus pictus* (sea urchins) eggs and embryos

Flight Hardware

- Aquatic Research Facility

Mission Notes:

- Crew included a mission specialist from the Canadian Space Agency
- Carried the SPACEHAB module in the Shuttle cargo bay

Payload Notes

- Collaboration between Kennedy Space Center and the Canadian Space Agency
- First flight of the Aquatic Research Facility

PAYLOAD PROFILE: BRIC-07/STS-77

Life Sciences Payload: Biological Research in Canisters 7

Mission Duration: 10 days **Date:** May 19–29, 1996

Payload Location: Shuttle middeck

Life Science Research Objectives
- To examine the effects of microgravity on tobacco hornworm ecdysone release and subsequent development

Life Science Investigations
Developmental Biology
- Tischler, Marc (University of Arizona), Effects of Microgravity on Tobacco Hornworm (*Manduca Sexta*) during Metamorphosis

Organisms Studied
- *Manduca Sexta* (tobacco hornworm) pupae

Flight Hardware
- BRIC-100 (vented)

Mission Notes
- Crew included a mission specialist from the Canadian Space Agency
- Carried the SPACEHAB module in the Shuttle cargo bay

Payload Notes
- The seventh Shuttle flight of the BRIC hardware

PAYLOAD PROFILE: IMMUNE.3/STS-77

Life Sciences Payload: IMMUNE.3

Mission Duration: 10 days **Date:** May 19–29, 1996

Payload Location: SPACEHAB module/Shuttle middeck

Life Science Research Objectives

- To further test the ability of Insulin-like Growth Factor (IGF-1) to prevent or reduce the detrimental effects of space flight on the immune system

Life Science Investigations

Immunology

- Zimmerman, Robert (Chiron Corporation), Confirmation of Ability of Sustained-Release Insulin-like Growth Factor I (IGF-I) to Counteract the Effect of Space Flight on the Rat Immune and Skeletal Systems

Organisms Studied

- *Rattus norvegicus* (rat)

Flight Hardware

- Animal Enclosure Module (AEM)
- Ambient Temperature Recorder (ATR-4)

Mission Notes

- Crew included a mission specialist from the Canadian Space Agency
- Carried the SPACEHAB module in the Shuttle cargo bay

Payload Notes

- A commercial payload for which the corporate affiliate was Chiron Corporation in Emeryville, California

PAYLOAD PROFILE: NIH.C7/STS-77

Life Sciences Payload: National Institutes of Health Cells 7

Mission Duration: 10 days **Date:** May 19–29, 1996

Payload Location: Shuttle middeck

Life Science Research Objectives
- To confirm that cartilage calcification and cell differentiation proceed more slowly in cells cultured in microgravity than in 1 G
- To study microgravity-induced skeletal myofiber atrophy

Life Science Investigations
Bone Physiology
- Boskey, Adele (Hospital for Special Surgery), The Effects of Micro-Gravity on *In Vitro* Calcification

Muscle Physiology
- Vandenburgh, Herman (Miriam Hospital/Brown University School of Medicine), Effect of Space Travel on Skeletal Myofibers

Organisms Studied
- *Gallus gallus* (chicken)

Flight Hardware
- Space Tissue Loss-A (STL-A) Module

Mission Notes
- Crew included a mission specialist from the Canadian Space Agency
- Carried the SPACEHAB Module in the Shuttle cargo bay

Payload Notes
- A collaboration between NASA, NIH, and the Walter Reed Army Institute of Research
- Re-flight of the NIH.C5 payload, which had been compromised by a computer failure

PAYLOAD PROFILE: BRIC-08/STS-78

Life Sciences Payload: Biological Research in Canisters 8

Mission Duration: 17 days

Date: June 20–July 7, 1996

Payload Location: Shuttle middeck

Life Science Research Objectives

- To observe if the mitotic process and chromosome morphology in developing plant cells can be predictably modified (or not) in the space environment by deliberately providing optimized and/or nonoptimized environments
- To observe if adverse alterations in osmotic status and water relations (water stress) predispose cells to become damaged cytologically in the space environment

Life Science Investigations

Plant Biology

- Krikorian, Abraham (State University of New York at Stony Brook), Plant Embryos and Fidelity of Cell Division in Space

Organisms Studied

- *Hemerocallis* cv. Autumn Blaze (daylily)

Flight Hardware

- BRIC-100VC

Mission Notes

- Crew included one payload specialist from the Canadian Space Agency and one from CNES, the French space agency

Payload Notes

- Eighth flight of BRIC payload
- First flight of new, short, gas-tight BRIC canisters

PAYLOAD PROFILE: LMS/STS-78

Life Sciences Payload: Life and Microgravity Spacelab

Mission Duration: 16 days **Date:** June 20–July 7, 1996

Payload Location: Spacelab module/Shuttle middeck

Life Science Research Objectives

- To determine whether compression wood formation occurs in microgravity, and to establish the time course of its (potential) induction at both 1 G and in microgravity
- To study the effects of microgravity on early embryonic development
- To determine the effect of microgravity on bone cell activity, bone mass, and levels of bone formation and resorption
- To determine the effect of excessive corticosteroid production caused by microgravity-induced stress on bone growth and loss

Life Science Investigations

Bone Physiology

- Wronski, Thomas (University of Florida, Gainesville), Role of Corticosteroids in Bone Loss during Space Flight

Developmental Biology

- Wolgemuth, Debra (Columbia University), Development of the Fish Medaka in Microgravity

Plant Biology

- Lewis, Norman (Washington State University), Lignin Formation and Effects of Microgravity: A New Approach

Organisms Studied

- *Pseudotsuga menziesii* (Douglas fir) seedlings
- *Pinus taeda* (Loblolly pine) seedlings
- *Oryzias latipes* (medaka) embryos
- *Rattus norvegicus* (rat)

Flight Hardware

- Plant Growth Unit (PGU)
- Atmospheric Exchange System (AES)
- Fixation Kits
- Space Tissue Loss-B (STL-B) Module
- Animal Enclosure Module (AEM)
- Ambient Temperature Recorder (ATR-4)

Mission Notes

- Crew included one payload specialist from the Canadian Space Agency and one from CNES, the French space agency

Payload Notes

- Carried life sciences and microgravity experiments, with life sciences research being focused on human physiology and space biology; space biology experiments sponsored by Ames Research Center
- Hardware for the embryonic development study was similar to the STL-A but with imaging capabilities

PAYLOAD PROFILE: BRIC-09/STS-80

Life Sciences Payload: Biological Research in Canisters 9

Mission Duration: 17 days **Date:** November 19–December 7, 1996

Payload Location: Shuttle middeck

Life Science Research Objectives

- To determine how the expressions of auxin- and gravistimulation-inducible genes are altered under the microgravity environment
- To identify the effects of microgravity on auxin transport/distribution and/or sensitivity of tissue to auxin in higher plants

Life Science Investigations

Plant Biology

- Li, Yi (Kansas State University), Effects of Micro-G on Gene Expression in Higher Plants

Organisms Studied

- *Lycoperscion esculentum* (transgenic tomato) seedlings
- *Nicotiana tabacum* (tobacco) seedlings

Flight Hardware

- BRIC-60

Mission Notes

- STS-80 broke the record for longest Shuttle flight

Payload Notes

- Ninth flight of the BRIC hardware

PAYLOAD PROFILE: NIH.C6/STS-80

Life Sciences Payload: National Institutes of Health Cells 6

Mission Duration: 18 days **Date:** November 19–December 7, 1996

Payload Location: Shuttle middeck

Life Science Research Objectives

- To determine the effect of space flight and reloading on Transforming Growth Factor-β (TGF-β) expression and other osteoblast mRNA expression patterns
- To determine if space flight causes changes in the osteoblast consistent with a reduction in bone formation and increase in bone resorption

Life Science Investigations

Bone Physiology

- Turner, Russel (Mayo Clinic), Effect of Spaceflight on TGF-β Expression by hFOB Cells
- Majeska, Robert (Mount Sinai Medical Center), Osteoblast Adhesion and Phenotype in Microgravity

Organisms Studied

- *Homo sapiens* (human) hFOB cell line
- *Rattus norvegicus* (rat) ROS cell line

Flight Hardware

- Cell Culture Module-A (CCM-A)

Mission Notes

- STS-80 broke the record for longest Shuttle flight

Payload Notes

- A collaboration between NASA, NIH, and the Walter Reed Army Institute of Research
- Flight hardware formerly called Space Tissue Loss-A Module
- Re-flight of the NIH.C4 payload, giving investigators a larger data set

PAYLOAD PROFILE: NIH.R4/STS-80

Life Sciences Payload: National Institutes of Health Rodents 4

Mission Duration: 18 days **Date:** November 19–December 7, 1996

Payload Location: Shuttle middeck

Life Science Research Objectives

- To study the effects of dietary calcium levels altered before, during, and after exposure to microgravity on vascular function and calcium metabolism

Life Science Investigations

Cardiovascular Physiology

- McCarron, David and Dan Hatton (Oregon Health Sciences University), Calcium Metabolism and Vascular Function in Rats after Space Flight

Organisms Studied

- *Rattus norvegicus* (rat) with genetically induced hypertension

Flight Hardware

- Animal Enclosure Module (AEM)
- Ambient Temperature Recorder (ATR-4)

Mission Notes

- STS-80 broke the record for longest Shuttle flight

Payload Notes

- A collaboration between the National Institutes of Health and NASA

PAYLOAD PROFILE: BIORACK 2/STS-81

Life Sciences Payload: Biorack 2

Mission Duration: 10 days **Date:** January 12–22, 1997

Payload Location: SPACEHAB module/Shuttle middeck

Life Science Research Objectives

- To compare bacterial growth on surfaces in microgravity and on Earth
- To examine the effects of microgravity on second messenger signal-transduction pathways
- To study the starch-statolith model for graviperception in plants
- To examine the effect of microgravity on lymphocyte activation, specifically cell-cell interaction and signaling
- To determine the effects of microgravity on bone loss by examining alterations in relevant gene expression patterns in the bone-forming cells

Life Science Investigations

Bone Physiology

- Hughes-Fulford, Millie (University of California, San Francisco), Effect of Microgravity on Osteoblast Gene Expression

Cell and Molecular Biology

- Tash, Joseph (University of Kansas Medical Center), Microgravity and Signal Transduction Pathways in Sperm

Immunology

- Sams, Clarence (NASA Johnson Space Center), Effect of Microgravity on Lymphocyte Activation

Microbiology

- Pyle, Barry (Montana State University), Bacterial Growth on Surfaces in Microgravity and on Earth

Plant Biology

- Kiss, John (Miami University), Graviperception in Starch-Deficient Plants in Biorack

Organisms Studied

- *Burkholderia cepacia* (bacterium)
- *Strongelocentrotus pupuratus* (sea urchin)
- *Arabidopsis thaliana* (mouse-ear cress)
- *Homo sapiens* (human)
- *Mus musculus* (mouse)

Flight Hardware

- Biorack

Mission Notes

- The fifth docking of the Space Shuttle to Mir
- Replaced one American astronaut on Mir (Lucid) with another (Blaha)

Payload Notes

- Shuttle delivered four experiments to Mir to be conducted during the NASA 4 mission and returned two experiments performed during the NASA 3 mission to Earth

PAYLOAD PROFILE: BIORACK 3/STS-84

Life Sciences Payload: Biorack 3

Mission Duration: 9 days **Date:** May 15–24, 1997

Payload Location: SPACEHAB module/Shuttle Middeck

Life Science Research Objectives

- To examine the effects of microgravity on second messenger signal-transduction pathways
- To study the starch-statolith model for graviperception in plants
- To examine the effect of microgravity on lymphocyte activation, specifically cell-cell interaction and signaling
- To determine the effects of microgravity on bone loss by examining alterations in relevant gene expression patterns in the bone-forming cells

Life Science Investigations

Bone Physiology

- Hughes-Fulford, Millie (University of California, San Francisco), Effect of Microgravity on Bone Cell Gene Expression

Cell and Molecular Biology

- Tash, Joseph (University of Kansas Medical Center), Microgravity and Signal Transduction Pathways in Sperm

Immunology

- Sams, Clarence (NASA Johnson Space Center), Effect of Microgravity on Lymphocyte Activation: Cell-Cell Interaction and Signaling

Plant Biology

- Kiss, John (Miami University), Graviperception in Starch-Deficient Plants in Biorack

Organisms Studied

- *Lytechinus pictus* (sea urchin)
- *Arabidopsis thaliana* (mouse-ear cress)
- *Homo sapiens* (human)
- *Mus musculus* (mouse)

Flight Hardware

- Biorack

Mission Notes

- The sixth docking of the Space Shuttle to Mir
- Replaced one American astronaut on Mir (Linenger) with another (Foale)

Payload Notes

- Re-flights of the experiments from STS-81, providing more data for analyses
- Shuttle delivered four experiments to Mir to be conducted during the NASA 5 mission, and returned four experiments performed during the NASA 4 mission to Earth

PAYLOAD PROFILE: BRIC-10/STS-85

Life Sciences Paylcad: Biological Research in Canisters 10

Mission Duration: 12 days **Date:** August 7–August 19, 1997

Payload Location: Shuttle middeck

Life Science Research Objectives

- To determine how the expressions of auxin- and gravistimulation-inducible genes are altered under the microgravity environment
- To identify the effects of microgravity on auxin transport/distribution and/or sensitivity of tissue to auxin in higher plants

Life Science Investigations

Plant Biology

- Li, Yi (Kansas State University), Effects of Micro-G on Gene Expression in Higher Plants

Organisms Studied

- *Lycoperscion esculentum* (transgenic tomato) seedlings
- *Nicotiana tabacum* (tobacco) seedlings

Flight Hardware

- BRIC-60
- GN_2 freezer

Mission Notes

- Crew included a payload specialist from the Canadian Space Agency
- In a cooperative venture with DLR, the German space agency, carried a German-built satellite
- Included a payload sponsored by NASDA, the Japanese space agency

Payload Notes

- Tenth flight of BRIC payload
- Second of two flights required for this experiment

PAYLOAD PROFILE: CUE/STS-87

Life Sciences Payload: Collaborative Ukranian Experiment

Mission Duration: 16 days **Date:** November 19–December 5, 1997

Payload Location: Shuttle middeck

Life Science Research Objectives

- To study the effects of microgravity on plant ultrastructure, pollination, fertilization, metabolism, biochemistry, hormones, cell differentiation, gene expression, and other cellular parameters
- To measure plant gravitropic and phototropic responses in a microgravity environment
- To determine the effects of microgravity on the susceptibility of plants to pathogens

Life Science Investigations

Plant Biology

- Brown, Christopher (NCSU-NSCORT), The Interaction of Microgravity and Ethylene on Soybean Growth and Metabolism
- Guikema, James (Kansas State University), Effects of Altered Gravity on the Photosynthetic Apparatus
- Leach, Jan (Kansas State University), Effects of Microgravity on Pathogenesis and Defense Responses in Soybean Tissues
- Musgrave, Mary (Louisiana State University), Microgravity Effects on Pollination and Fertilization
- Sack, Fred (Ohio State University), Differentiation and Tropisms in Space-Grown Moss (*Ceratodon*)
- Piastuch, William (Dynamac Corporation), Spaceflight Effects on Gene Expression in *Brassica rapa* and Soybean Tissue (GENEX)
- Musgrave, Mary (Louisiana State University), Spaceflight Effects on Structure, Function and Organization of Root Cells in *Brassica rapa*
- Kordyum, Elizabeth (National Academy of Sciences, Ukraine) Spaceflight Effects on Amino Acid Content in *Brassica rapa*
- Kordyum, Elizabeth (National Academy of Sciences, Ukraine) Spaceflight Effects of the Phytohormonal Content in *Brassica rapa*
- Kordyum, Elizabeth (National Academy of Sciences, Ukraine) Spaceflight Effects of the Lipid Content in *Brassica rapa*
- Demikiv, Orest (Institute of Ecology of the Carpathians, L'viv) Effects of Red Light and Microgravity on the Ultrastructure of *Ceratodon* and *Pottia protonemata*

Organisms Studied

- *Glycine max* (soybean) seedlings
- *Brassica rapa* (mustard plant) seedlings
- *Ceratodon purpureus* (moss)

Flight Hardware

- Plant Growth Facility
- BRIC-60
- BRIC-LED
- KSC Fixation Tube
- KSC GN_2 Freezer

Mission Notes

- Crew included a Ukranian payload specialist

Payload Notes

- First collaboration between NASA and NKAU, the Ukrainian space agency
- Educational component that included students from the U.S. and Ukraine performing ground control experiments for the flight experiments

PAYLOAD PROFILE: CEBAS/STS-89

Life Sciences Payload: Closed Equilibrated Biological Aquatic System

Mission Duration: 9 days **Date:** January 22–31, 1998

Payload Location: Shuttle middeck

Life Science Research Objectives

- To determine the effects of microgravity on development of the vestibular system
- To determine the effects of microgravity on the development of the brain-pituitary axis and associated organs

Life Science Investigations

Neurophysiology

- Wiederhold, Michael (University of Texas Health Science Center at San Antonio), Development of Vestibular Organs in Microgravity
- Schreibman, Martin (Brooklyn College), Brain-Pituitary Axis Development in the CEBAS Minimodule

Organisms Studied

- *Biomphalaria glabrata* (snail)
- *Xiphophorus helleri* (swordtail fish) adult and juvenile
- *Ceratophyllum derersum* (hornweed)

Flight Hardware

- Closed Equilibrated Biological Aquatic System (CEBAS) Minimodule

Mission Notes

- Eighth Shuttle mission to dock with Mir

Payload Notes

- Developed by OHB-Systems and DLR, the German space agency
- Hardware included the CEBAS Minimodule, a habitat for aquatic organisms
- CEBAS hardware accommodated two U.S. and nine German experiments
- First flight of a closed life support system

PAYLOAD PROFILE: MPNE/STS-89

Life Sciences Payload: Microgravity Plant Nutrient Experiment

Mission Duration: 9 days **Date:** January 22–31, 1998

Payload Location: Shuttle middeck

Life Science Research Objectives

- To demonstrate the potential use of porous tubes to provide water and essential minerals to higher plants grown in microgravity
- To assess whether the Water Availability Sensors and Water Delivery System could work in concert to maintain a predetermined volume of nutrient solution at the root zone
- To collect and archive system performance data from various sensors for postflight analysis of system operation
- To test automatically inbibing and germinating seeds on orbit

Life Science Investigations

Plant Biology

- Kennedy Space Center, Microgravity Plant Nutrient Experiment

Organisms Studied

- *Triticum aestivum* cv. Yecora rojo (wheat) seeds

Flight Hardware

- Microgravity Plant Nutrient Experiment (MPNE)

Mission Notes

- Eighth Shuttle mission to dock with Mir

Payload Notes

- Technology demonstration for ISS Plant Research Unit

PAYLOAD PROFILE: NL/STS-90

Life Sciences Payload: Neurolab

Mission Duration: 16 days **Date:** April 17–May 3, 1998

Payload Location: Spacelab module

Life Science Research Objectives

- To increase the understanding of the mechanisms responsible for neurological and behavioral changes in space
- To study the effects of microgravity on the developing nervous system, and look for irreversible changes in the nervous system caused by the lack of gravitational cues during critical stages in development
- To study changes in the morphology and biochemistry of the adult nervous system caused by exposure to microgravity

Life Science Investigations

Neurophysiology

- Baldwin, Kenneth (University of California, Irvine), Neural-Thyroid Interaction on Skeletal Isomyosin Expression in Zero-G
- Highstein, Stephen (Washington University, St. Louis, MO), Chronic Recording of Otolith Nerves in Microgravity
- Holstein, Gay (Mount Sinai School of Medicine), Anatomical Studies of Central Vestibular Adaptation
- Horn, Eberhard Rudolf (University of Ulm, Germany), Development of an Insect Gravity Sensory System in Space
- Fuller, Charles (University of California, Davis), CNS Control of Rhythms and Homeostasis during Space Flight
- Kosik, Kenneth (Brigham and Women's Hospital), Neuronal Development under Conditions of Space Flight
- McNaughton, Bruce (University of Arizona), Ensemble Neural Coding of Place and Direction in Zero-G
- Nowakowski, Richard (Robert Wood Johnson Medical School), Reduced Gravity: Effects in the Developing Nervous System
- Pompeiano, Ottavio (University of Pisa, Italy), Effects of Microgravity on Gene Expression in the Brain
- Raymond, Jacqueline (Université de Montpellier II, France), Microgravity and Development of Vestibular Circuits
- Riley, Danny (Medical College of Wisconsin), The Effects of Microgravity on Neuromuscular Development
- Ross, Muriel (NASA Ames Research Center), Multidisciplinary Studies of Neural Plasticity in Space
- Shimizu, Tsuyoshi (Fukushima Medical College, Japan), Postnatal Development of Rats Aortic Nerves under Conditions of Microgravity
- Walton, Kerry (New York University Medical Center), Effects of Gravity on Postnatal Motor Development
- Wiederhold, Michael (University of Texas Health Science Center, San Antonio), Development of Vestibular Organs in Microgravity

Organisms Studied

- *Rattus norvegicus* (rat)
- *Mus musculus* (mouse)
- *Opsanus tau* (toadfish)

- *Acheta domesticus* (cricket)
- *Biomphalaria glabrata* (snail)
- *Xiphophorus helleri* (swordtail fish)

Flight Hardware

- Research Animal Holding Facility (RAHF): Adult Facility
- Research Animal Holding Facility (RAHF): Nursing Facility
- Animal Enclosure Module (AEM): Nursing Facility
- Botany Experiment (BOTEX) Incubator
- Closed Equilibrated Biological Aquatic System (CEBAS)
- Vestibular Function Experiment Unit (VFEU)

Mission Notes

- Last dedicated life sciences mission to fly before the construction of the International Space Station
- Last flight of Spacelab
- Crew included a Canadian astronaut

Payload Notes

- Of the 26 experiments, 11 used human subjects and the 15 sponsored by Ames Research Center used animal subjects
- International science participation included France, ESA, Germany, and Japan

PAYLOAD PROFILE: BRIC-13/STS-95

Life Sciences Payload: Biological Research in Canisters 13

Mission Duration: 9 days **Date:** October 29–November 7, 1998

Payload Location: Shuttle middeck

Life Science Research Objectives

- To study the role of hypergravity, hypogravity, and microgravity on embryo initiation and development in orchardgrass
- To determine how microgravity affects initiation of embryos
- To determine how microgravity affects the polarity of embryos

Life Science Investigations

Plant Biology

- Conger, Bob V. (University of Tennessee), Gravitational Effects of Embryogenesis in Poaceae

Organisms Studied

- *Dactylis glomerata* (orchardgrass)

Flight Hardware

- BRIC-100
- BRIC-Passive Cooler (PC)

Mission Notes

- John Glenn returned to space as a payload specialist
- Crew included a Japanese payload specialist

Payload Notes

- BRIC-100 Canister transferred from the BRIC-PC on flight day 5, causing samples to begin warming to ambient, thus initiating embryogenesis
- Follow-on experiment based on results of BRIC-02

PAYLOAD PROFILE: BRIC-PEG/C/STS-95

Life Sciences Payload: Biological Research in Canisters–PEG/C

Mission Duration: 9 days **Date:** October 29–November 7, 1998

Payload Location: Shuttle middeck and SPACEHAB

Life Science Research Objectives
- To analyze the cellular and molecular development of the cucumber seedling in microgravity
- To understand mechanisms by which gravity affects germination

Life Science Investigations
Plant Biology
- Cosgrove, Daniel (Pennsylvania State University), Gravity Effects on Seedling Morphogenesis

Organisms Studied
- *Cucumis sativus* (cucumber) seedlings

Flight Hardware
- BRIC-60
- KSC GN_2 Freezer
- Spacelab OSR/F

Mission Notes
- John Glenn returned to space as a payload specialist
- Crew included a Japanese payload specialist

Payload Notes
- One of several experiments in collaboration with NASDA, the Japanese space agency, to use BRIC hardware

PAYLOAD PROFILE: NIH.C8/STS-95

Life Sciences Payload: National Institutes of Health Cells 8

Mission Duration: 8 days **Date:** October 29–November 7, 1998

Payload Location: SPACEHAB module

Life Science Research Objectives

- To study the mechanisms responsible for the impaired growth of cultured cartilage cells in microgravity

Life Science Investigations

Bone Physiology

- Doty, Stephen B. (Hospital for Special Surgery), The Effect of Spaceflight on Cartilage Cell Cycling and Differentiation

Organisms Studied

- *Gallus gallus* (white leghorn chicken)

Flight Hardware

- Cell Culture Module-A (CCM-A)

Mission Notes

- John Glenn returned to space as a payload specialist
- Crew included a Japanese payload specialist

Payload Notes

- Eighth in a collaborative series with the National Institutes of Health and the Walter Reed Army Institute of Research
- Flight hardware was formerly called the Space Tissue Loss-A Module

PAYLOAD PROFILE: VFEU/STS-95

Life Sciences Payload: Vestibular Function Experiment Unit

Mission Duration: 8 days **Date:** October 29–November 7, 1998

Payload Location: SPACEHAB module

Life Science Research Objectives
- To study the responses of the otolithic organs in microgravity
- To record responses of primary otolithic origin with the utilization of implanted multichannel electrodes.

Life Science Investigations
Neurophysiology
- Highstein, Stephen M. (Washington University), Chronic Recording of Otolith Nerves in Microgravity

Organisms Studied
- *Opsanus tau* (oyster toadfish)

Flight Hardware
- Vestibular Function Experiment Unit (VFEU)

Mission Notes
- John Glenn returned to space as a payload specialist
- Crew included a Japanese payload specialist

Payload Notes
- This experiment was a re-flight of the investigator's experiment from Neurolab (STS-90), to gain additional data

NASA/Mir Experiment Profiles

The NASA/Mir program continued through 1998 and included many long-duration experiments conducted during the residence of U.S. astronauts on the station. Because experiments were performed over varying and sometimes lengthy time periods, unrelated to particular mission designations, these investigations are described in the following section as experiment profiles. This is a harbinger of what can be expected on the International Space Station. As with Shuttle experiments, the lag time between the flight of an experiment and subsequent publication of results can be several years and many detailed reports are unavailable. The following profiles include: major experiment objectives; names and affiliations of investigators; short notes on flight hardware and research subjects; and payload/experiment notes with the duration of time spent on Mir.

EXPERIMENT PROFILE: NASA/MIR–INCUBATOR 3

Brought to Mir: STS-76 **Brought back to Earth:** STS-79

Duration on Mir: March 1996–September 1996

Life Science Research Objectives

- To determine if the microgravity environment causes any abnormalities during embryonic development of vertebrate animals, specifically quail
- To examine the differences in the formation of the body, including the internal organs, bones, and vestibular gravity receptors, in microgravity as compared to on Earth

Life Science Investigations (by proposal title)

Developmental Biology

- Anderson, Page (Duke University), Expression of Contractile Protein Isoforms in Microgravity
- Conrad, Gary (Kansas State University), Effects of Microgravity on Quail Eye Development
- Doty, Stephen (Hospital for Special Surgery), Development in Long-Duration Spaceflight,
- Fermin, César (Tulane University), Effect of Microgravity on Afferent Innervation
- Fritzsch, Bernd (Creighton University), Effects of Weightlessness on Vestibular Development of Quail
- Hester, Patricia (Purdue University), Quail Eggshell Mineral Analysis
- Lelkes, Peter (University of Wisconsin Medical School, Milwaukee), Avian Blood-Vessel Formation in Space
- Shimizu, Toru (University of South Florida), Effects of Weightlessness on the Avian Visuo-Vestibular System: Immunohistochemical Analysis
- Wentworth, Bernard (University of Wisconsin, Madison), Fecundity of Quail in Spacelab Microgravity

Organisms Studied

- *Coturnix coturnix japonica* (quail) eggs

Flight Hardware

- Incubator (Slovakian)
- Egg Storage Kits
- Fixation Kits
- Glove Bag with Filter/Pump Kit

Payload/Experiment Notes

- Sixteen-day experiment duration, as in previous two Incubator experiments
- Eggs fixed at different developmental stages for return to Earth

EXPERIMENT PROFILE: NASA/MIR–ENVIRONMENTAL RADIATION MEASUREMENTS ON MIR STATION 1

Brought to Mir: STS-76 **Brought back to Earth:** STS-79

Duration on Mir: March 1996–September 1996

Life Science Research Objectives

- To expand the knowledge of environmental radiation at the 51.6° orbit, location of the Mir station, and future location of the International Space Station
- To provide information on the shielding effects of the Station
- To allow comparisons between different methods of radiation dosimetry

Life Science Investigations (by proposal title)

Radiation Biology

- Benton, Eugene (University of San Francisco), Environmental Radiation Measurements on Mir Station

Organisms Studied

- N/A

Flight Hardware

- Area Passive Dosimeters (APDs)

Payload/Experiment Notes

- Dosimeters placed in six locations on Mir
- Data to be compared with that from dosimetry experiments conducted on earlier NASA/Mir missions using identical APDs in the same locations to determine change in radiation levels over time
- APDs contained both plastic nuclear track detectors and thermoluminescent detectors, allowing the measurement of different aspects of the radiation environment

EXPERIMENT PROFILE: NASA/MIR–GREENHOUSE 2

Brought to Mir: STS-79 **Brought back to Earth:** STS-81

Duration on Mir: September 1996–January 1997

Life Science Research Objectives

- To attempt a seed-to-seed growth cycle in microgravity, and to determine if any plant processes within a life cycle are completely dependent on gravity
- To observe the effects of microgravity on basic plant processes, such as photosynthesis and water use, as well as biochemical and structural changes

Life Science Investigations (by proposal title)

Plant Biology

- Salisbury, Frank (Utah State University), Greenhouse–Integrated Plant Experiments on Mir

Organisms Studied

- *Triticum aestivum* (Super-Dwarf wheat)

Flight Hardware

- Svet Plant Growth Facility
- Gas Exchange Measurement System (GEMS)
- Soil Moisture Probes
- Environmental Data System
- Fundamental Biology Kit Hardware

Payload/Experiment Notes

- Experiment operations continued through the docking of STS-81, during which the final harvest of the space-grown plants occurred
- Environmental conditions in Svet greenhouse improved after Phase 1A experiment, allowing dwarf wheat to grow at a rate similar to that of ground controls
- Excess ethylene in the Svet atmosphere prevented seed formation

EXPERIMENT PROFILE: NASA/MIR–ENVIRONMENTAL RADIATION MEASUREMENTS ON MIR STATION 2

Brought to Mir: STS-79 **Brought back to Earth:** STS-81

Duration on Mir: September 1996–January 1997

Life Science Research Objectives

- To expand the knowledge of environmental radiation at the 51.6° orbit, location of the Mir station, and future location of the International Space Station
- To provide information on the shielding effects of Mir
- To allow comparisons between different methods of radiation dosimetry

Life Science Investigations (by proposal title)

Radiation Biology

- Benton, Eugene (University of San Francisco), Environmental Radiation Measurements on Mir Station

Organisms Studied

- N/A

Flight Hardware

- Area Passive Dosimeters (APDs)

Payload/Experiment Notes

- Dosimeters placed in six locations on Mir
- Data to be compared with that from dosimetry experiments conducted on earlier NASA/Mir missions using identical APDs in the same locations to determine change in radiation levels over time
- APDs contained both plastic nuclear track detectors and thermoluminescent detectors, allowing the measurement of different aspects of the radiation environment

EXPERIMENT PROFILE: NASA/MIR–EFFECTIVE DOSE MEASUREMENT DURING EVA 1

Brought to Mir: STS-81 **Brought back to Earth:** STS-84

Duration on Mir: January 1997–May 1997

Life Science Research Objectives

- To develop an onboard thermoluminescent dosimeter system to compare extra radiation dosage received during extravehicular activity compared to doses received inside Mir
- To measure the ratio of low to high linear energy transfer dose components inside the station

Life Science Investigations (by proposal title)

Radiation Biology

- Deme, Sandor (KFKI Atomic Energy Research Institute), Effective Dose Measurement during EVA Experiment

Organisms Studied

- N/A

Flight Hardware

- Thermoluminescent Dosimeter System

Payload/Experiment Notes

- Developed by a Hungarian investigator and sponsored by Ames Research Center

EXPERIMENT PROFILE: NASA/MIR–ENVIRONMENTAL RADIATION MEASUREMENTS ON MIR STATION 3

Brought to Mir: STS-81 **Brought back to Earth:** STS-84

Duration on Mir: January 1997–May 1997

Life Science Research Objectives

- To expand the knowledge of environmental radiation at the 51.6° orbit, location of the Mir station, and future location of the International Space Station
- To provide information on the shielding effects of Mir
- To allow comparisons between different methods of radiation dosimetry

Life Science Investigations (by proposal title)

Radiation Biology

- Benton, Eugene (University of San Francisco), Environmental Radiation Measurements on Mir Station

Organisms Studied

- N/A

Flight Hardware

- Area Passive Dosimeters (APDs)

Payload/Experiment Notes

- Dosimeters placed in six locations on Mir
- Data to be compared with that from dosimetry experiments conducted on earlier NASA/Mir missions using identical APDs in the same locations to determine change in radiation levels over time
- APDs contained both plastic nuclear track detectors and thermoluminescent detectors, allowing the measurement of different aspects of the radiation environment

EXPERIMENT PROFILE: NASA/MIR–BRIC-MIR

Brought to Mir: STS-81 **Brought back to Earth:** STS-84

Duration on Mir: January 1997–May 1997

Life Science Research Objectives

- To use discrete, uniform somatic embryo fractions at different levels of development to test whether the level or stage of development contributes to these chromosome effects
- To use somatic embryos at the same stage of development, but of different size and mass to test whether there is a size- or mass-related contribution to these chromosome effects
- To test whether differences in the availability of water in the immediate vicinity of the somatic embryo contribute to these chromosomal effects

Life Science Investigations (by proposal title)

Plant Biology

- Krikorian, Abraham (State University of New York at Stony Brook), Cellular Mechanisms of Spaceflight Specific Stress to Plants

Organisms Studied

- *Hemerocallis* cv. Autumn Blaze (daylily) cells

Flight Hardware

- BRIC-VC Canisters

Payload/Experiment Notes

- No inflight procedures required
- Once returned to Earth, some recovered plantlets were examined for chromosomal effects, and some were reared into plants to observe their progression through the stages of growth and development

EXPERIMENT PROFILE: NASA/MIR–EFFECTS OF GRAVITY ON INSECT CIRCADIAN RHYTHMICITY

Brought to Mir: STS-84 **Brought back to Earth:** STS-86

Duration on Mir: May 1997–September 1997

Life Science Research Objectives

- To study the effects of space flight on the circadian timing system (CTS) of the black-bodied beetle
- To determine if the CTS exhibits adaptation to microgravity during long-term exposure, and if altered gravity affects the sensitivity of the CTS to light

Life Science Investigations (by proposal title)

Chronobiology

- Hoban-Higgins, Tana (University of California, Davis), Effects of Gravity on Insect Circadian Rhythmicity

Organisms Studied

- *Trigonoscelis gigas* (black-bodied beetle)

Flight Hardware

- Beetle Kits

Payload/Experiment Notes

- Collision of Mir and the Progress supply ship on June 25 caused temporary loss of power to Beetle Kits and several relocations of the experiment
- The hardware performed well, and demonstrated successful recordings of activity rhythms for a long period of time in the microgravity environment

EXPERIMENT PROFILE: NASA/MIR–GREENHOUSE 3

Brought to Mir: STS-84 **Brought back to Earth:** STS-86

Duration on Mir: May 1997–September 1997

Life Science Research Objectives

- To attempt a seed-to-seed growth cycle in microgravity, and determine if any plant processes within a life cycle are completely dependent on gravity
- To compare the production of seeds by plants grown in space and on Earth
- To determine the effects of microgravity on cell shape, structure, organization, and physiology, as well as overall metabolism

Life Science Investigations (by proposal title)

Plant Biology

- Musgrave, Mary (Louisiana State University), Developmental Analysis of Seeds Grown on Mir

Organisms Studied

- *Brassica rapa* (mustard plant)

Flight Hardware

- Svet Plant Growth Facility
- Gas Exchange Measurement System (GEMS)
- Soil Moisture Probes
- Environmental Data System
- Fundamental Biology Kit Hardware

Payload/Experiment Notes

- Collision of Mir and the Progress supply ship on June 25 caused loss of power to Svet, as well as lower temperatures and the loss of some Mir atmospheric gas samples, equipment, and films stored in damaged module
- Power outages continued throughout remaining duration of experiment
- First successful seed-to-seed plant cycle in space performed
- No hardware problems encountered in Svet greenhouse

EXPERIMENT PROFILE: NASA/MIR–EFFECTIVE DOSE MEASUREMENT DURING EVA 2

Brought to Mir: STS-84 **Brought back to Earth:** STS-86

Duration on Mir: May 1997–September 1997

Life Science Research Objectives

- To continue using the thermoluminescent dosimeter system to compare extra radiation dosage received during extravehicular activity compared to doses received inside Mir
- To continue to measure the ratio of low to high linear energy transfer-dose components inside the station

Life Science Investigations (by proposal title)

Radiation Biology

- Deme, Sandor (KFKI Atomic Energy Research Institute), Effective Dose Measurement during EVA

Organisms Studied

- N/A

Flight Hardware

- Thermoluminescent Dosimeter System

Payload/Experiment Notes

- Collision of Mir and Progress supply ship on June 25 damaged and depressurized Spekter module, where TLD reader resided, rendering reader unavailable and unable to provide data for the NASA 5 segment of the experiment

EXPERIMENT PROFILE: NASA/MIR–ENVIRONMENTAL RADIATION MEASUREMENTS ON MIR STATION 4

Brought to Mir: STS-84 **Brought back to Earth:** STS-86

Duration on Mir: May 1997–September 1997

Life Science Research Objectives

- To expand the knowledge of environmental radiation at the 51.6° orbit, location of the Mir station, and future location of the International Space Station
- To provide information on the shielding effects of Mir
- To allow comparisons between different methods of radiation dosimetry

Life Science Investigations (by proposal title)

Radiation Biology

- Benton, Eugene (University of San Francisco), Environmental Radiation Measurements on Mir Station

Organisms Studied

- N/A

Flight Hardware

- Area Passive Dosimeters (APDs)

Payload/Experiment Notes

- Dosimeters placed in six locations on Mir
- Data to be compared with that from dosimetry experiments conducted on earlier NASA/Mir missions using identical APDs in the same locations to determine change in radiation levels over time
- APDs contained both plastic nuclear track detectors and thermoluminescent detectors, allowing the measurement of different aspects of the radiation environment

EXPERIMENT PROFILE: NASA/MIR–ACTIVE DOSIMETRY OF CHARGED PARTICLES

Brought to Mir: STS-86 **Brought back to Earth:** STS-89

Duration on Mir: September 1997–January 1998

Life Science Research Objectives

- To detect the increase in radiation dosage during the passage of Mir through the South Atlantic Anomaly, and fluctuations in dosage due to geomagnetic weather
- To use time-resolving active radiation detectors, instead of passive dosimeters, to correlate dosage levels to orbital parameters and radiation components of different origin

Life Science Investigations (by proposal title)

Radiation Biology

- Schott, Jobst (German Aerospace Center), Active Dosimetry of Charged Particles

Organisms Studied

- N/A

Flight Hardware

- Passivated Implanted Silicon Detectors (PIPS)
- Charge Coupled Devices

Payload/Experiment Notes

- PIPS device had been used previously to measure radiation spectra inside Biorack, on Shuttle missions STS-76, STS-81, and STS-84
- Investigator from the German Aerospace Center and sponsored by Ames Research Center

EXPERIMENT PROFILE: NASA/MIR–ENVIRONMENTAL RADIATION MEASUREMENTS ON MIR STATION 5

Brought to Mir: STS-86 **Brought back to Earth:** STS-89

Duration on Mir: September 1997–January 1998

Life Science Research Objectives
- To expand the knowledge of environmental radiation at the 51.6° orbit, location of the Mir station, and future location of the International Space Station
- To provide information on the shielding effects of Mir
- To allow comparisons between different methods of radiation dosimetry

Life Science Investigations (by proposal title)
Radiation Biology
- Benton, Eugene (University of San Francisco), Environmental Radiation Measurements on Mir Station

Organisms Studied
- N/A

Flight Hardware
- Area Passive Dosimeters (APDs)

Payload/Experiment Notes
- Dosimeters placed in six locations on Mir
- Data to be compared with that from dosimetry experiments conducted on earlier NASA/Mir missions using identical APDs in the same locations to determine change in radiation levels over time
- APDs contained both plastic nuclear track detectors and thermoluminescent detectors, to allow the measurement of different aspects of the radiation environment

Bion Biosatellite Experiment Profiles

The U.S. participated in one Russian biosatellite mission during the 1996–1998 period: Bion 11. The following payload profile includes: major research objectives; names and affiliations of U.S. investigators; notes on flight hardware; and mission and payload highlights.

PAYLOAD PROFILE: BION 11

Life Sciences Payload: Bion 11

Mission Duration: 14 days **Date:** December 24, 1996–January 7, 1997

Life Science Research Objectives

- To study the effects of adaptation to space flight on behavior and performance, and muscle, bone, and regulatory physiology of primates

Life Science Investigations (by proposal title)

Behavior and Performance

- Rumbaugh, Duane (Georgia State University), Behavior and Performance Project

Bone and Calcium Physiology

- Shackelford, Linda (Methodist Hospital), Bone and Lean Body Mass Changes Following Space Flight

Chronobiology

- Fuller, Charles (University of California, Davis), Circadian Rhythms of *Macaca mulatta* during Space Flight

Metabolism and Nutrition

- Fuller, Charles (University of California, Davis), Energy Metabolism of *Macaca mulatta* during Space Flight
- Fuller, Charles (University of California, Davis), Thermoregulation in *Macaca mulatta* during Space Flight

Muscle Physiology

- Bodine-Fowler, Sue (University of California, San Diego), Structural and Metabolic Plasticity of Leg Muscle
- Edgerton, Reginald (University of California, Los Angeles) and Duane Rumbaugh (Georgia State University), Adaptations of Motor Control in Response to Space Flight
- Fitts, Robert (Marquette University), Effect of Weightlessness on Single Muscle Fiber Function in Rhesus Monkeys

Renal, Fluid, and Electrolyte Physiology

- Grindeland, Richard (NASA Ames Research Center), Fluid-Electrolyte Metabolism and Its Regulation in Primates in Microgravity

Organisms Studied

- *Macaca mulatta* (rhesus monkey)

Flight Hardware

- Primate Bios and associated Russian hardware
- Digital Data Storage System
- Head Electronics Assembly
- Sensors and Electrodes to measure physiological data
- Preamplifiers, Amplifiers, and Control systems

Mission and Payload Notes

- First in the Cosmos/Bion series to be a joint U.S./Russian space flight conducted under a bilateral NASA/RSA contract
- First in which NASA participated in recovery operations
- NASA/CNES scientists participated as an integrated team
- During postflight examinations, one of the two flight primates died from anesthesia complications

Appendix I

Experiment Descriptions

Page intentionally left blank

Experiment Descriptions

This Appendix contains one-page descriptions of life science experiments flown by Ames Research Center and Kennedy Space Center between 1991 and 1995.

The experiments are grouped by payload. Individual experiments have been defined based on the science results generated from a given payload, regardless of the number of official "experiments" designated for a given mission. Biospecimen sharing programs and informal tissue sharing between investigators have produced supplemental experiments from several payloads. As a result, this volume contains more experiments than those defined in the original proposals to NASA. The goal of this book is to attempt to represent all science resulting from each payload.

Designations of "Investigator" and "Co-Investigator" are provided to identify individuals who, respectively, performed or contributed to the science generally, and they do not necessarily reflect the use of such terminology in NASA grants, contracts, or investigator proposals. The experiment descriptions were derived from experiment publications and reports (see Appendix II). Due to space limitations, only the first thirteen "Co-Investigators" could be listed for each record. Payload managers, payload scientists, and other support personnel are not listed, although their contribution to the mission(s) that enabled each of these studies should be noted.

Each experiment has been assigned a unique reference number, consisting of:

- a prefix denoting the payload with which the experiment was connected
- a numerical designation, unique within each mission (for example, experiments from Spacelab Life Sciences 2 would be designated SLS2-1, SLS2-2, and so forth.)

These reference numbers correspond to those in Appendix II Publications. Experiment information sources listed in Appendix II include publications from the open literature and NASA internal reports.

Each experiment description contains the following information: investigators and their institutions; experiment title, science discipline, research subject species, common name, and sex; numbers

of flight and control subjects used (when appropriate); experiment objectives, methods, and results; and a list of key flight hardware. NASA flight hardware items are described in Appendix III: Flight Hardware.

For more detailed information on NASA life sciences experiments, see the Life Sciences Data Archive Web site at http://lsda.jsc.nasa.gov.

BRIC1-1

Title of Study

The Effects of Microgravity on Gypsy Moth Development (Diapause in Gypsy Moth Eggs)

Science Discipline

Developmental biology

Investigator	Institute
Dora Hayes	U.S. Department of Agriculture

Co-Investigator(s)	Institute
Bell, Robert	U.S. Department of Agriculture

Research Subject(s)

Lymantria dispar (gypsy moth)

Male/Female

Ground-Based Controls

24-Hour asynchronous ground control using the Orbiter Environmental Simulator

Key Flight Hardware

BRIC-60 Canister

Objectives/Hypothesis

This experiment flew gypsy moth eggs to determine how microgravity affects the developing moth's diapause cycle. The diapause cycle is the period of time when the moth is in a dormant state and undergoing development. Previous space flights of gypsy moths have indicated that microgravity may shorten the diapause cycle which leads to the emergence of sterile gypsy moth larvae. Since the gypsy moth is probably the most damaging insect pest of hardwood trees in the eastern United States, extensive ground-based research has been conducted to modify the life cycle of the gypsy moth to create sterile moths.

Approach or Methods

Two different types of moth eggs were flown. One-half of the eggs were lab reared and one-half were wild. These were flown in the Shuttle middeck for 11 days. After retrieval from the Orbiter, the eggs were examined to determine the number of viable larvae and the status of the reproductive system.

Results

No results from the experiment are currently available.

Title of Study
Starch Metabolism in Space-Grown Soybean Seedlings

Science Discipline
Plant biology

Investigator	Institute
Christopher S. Brown	Dynamac Corporation

Co-Investigator(s)	Institute
Guikema, James A.	Kansas State University

Research Subject(s)
Glycine max (soybean)
Flight seeds: 52

Ground-Based Controls
24-Hour asynchronous ground control using the Orbiter Environmental Simulator

Key Flight Hardware
BRIC-60 Canister

Objectives/Hypothesis
This was the first flight of this experiment that tested the hypothesis that starch concentration in plant tissue is decreased due to the effects of the space/microgravity environment. This experiment also investigated possible mechanistic causes for the changes in starch concentration. Measurements were made of starch and soluble sugar concentrations, critical biosynthetic and degradative enzyme activities, localization of the starch grains and the plastids in which they are found, structural and ultrastructural makeup of different tissues within the plants, and detailed measurements of growth and biomass partitioning.

Approach or Methods
Two canisters filled with soybeans were flown. The soybeans were harvested postflight. Measurements were made of growth, gas concentrations in the canisters, carbohydrate concentrations and related enzyme activity measurements in the cotyledons and ultrastructural analysis of cotyledon, hypocotyl, and root-tissue sections.

Results
The hypothesis that starch would be reduced in concentration in the space-grown cotyledons was supported by the results of this experiment. Starch concentration in the cotyledons was reduced by approximately 25% in the space tissue compared to the ground controls. Measurements of 11 different enzyme activities related to starch and sugar metabolism were conducted. Only ADP glucose pyrophosphorylase, a rate-limiting enzyme in starch synthesis, was affected by the space flight environment. The activity of this enzyme was lower in the space-grown cotyledons compared to the ground controls, suggesting that the lower starch concentration seen was due to a lower activity of this enzyme. Starch grain size in the cotyledons was also measured. It was found that starch grains were larger or not affected by the space flight environment. Taken together with the lower concentration of starch in the space-exposed cotyledons, this suggests that the starch grain itself may have an altered (i.e., less dense) structure in space.

Title of Study

Somatic Embryogenesis of Orchardgrass in Microgravity

Science Discipline

Plant biology

Investigator	Institute
Bob V. Conger	University of Tennessee

Co-Investigator(s)	Institute
None	

Research Subject(s)

Dactylis glomerata L. (orchardgrass)

Ground-Based Controls

"Sister" segments from opposite leaf halves of those used for flight treatments exposed to Orbiter Environmental Simulation

Key Flight Hardware

BRIC-100 Canister

Objectives/Hypothesis

The overall objective of this research was to provide information on the influence of microgravity on embryo initiation, differentiation, development, and the ultimate reproductive capacity of resultant plants utilizing an *in vitro* culture system in orchardgrass (*Dactylis glomerata* L.) in which the target cells remain *in situ*. The system was based on paired half-leaf segments which provided a precise control and the opportunity to use paired statistics for the analysis of the data.

Approach or Methods

Somatic embryos formed directly from mesophyll cells in cultured leaf segments and were allowed to develop fully to a germinable stage. The basal 3 cm of the youngest two leaves were split down the midvein. These were cut transversely into segments approximately 3 mm square. Segments from one-half leaf were used for various treatments and the corresponding sister segments served as controls. Observations and data were collected on quantity and quality of embryo formation, axis determination, and polarity. Plants were established from somatic embryos and used for mitotic chromosome analyses. The same plants were transferred to field and used for meiotic chromosome analyses and estimation of pollen fertility.

Results

Absence of gravity affected the ability of cells in the leaf segments to produce embryos for all planting times prior to launch. Somatic embryogenesis was significantly decreased in leaf segments plated 21 hours, 3 days, and 7 days prior to launch. The highest reduction (70%) was observed for the 21-hour time period. Histological examination of leaf tissues fixed immediately after landing indicated a higher ratio of anticlinical/periclinical divisions. Observations also indicated reduced cell-division activity and a lower frequency of early embryogenic events in leaf tissue from the 21-hour plating period. Leaf tissue from the 21-hour plating period that was fixed 7, 14, and 21 days after landing showed an increase in tissue hardening with few embryos forming. The ground controls continued to develop and produce numerous embryos. Chromosome analyses of the parent and control plants revealed that all had the normal chromosome complement, as well as most of plants resulting from the flight treatment. One flight regenerate was a mixoploid and two others showed centric fragments.

BRIC3-1

Title of Study

Starch Metabolism in Space-Grown Soybean Seedlings

Science Discipline

Plant biology

Investigator	Institute
Christopher S. Brown	Dynamac Corporation

Co-Investigator(s)	Institute
Guikema, James A.	Kansas State University

Research Subject(s)

Glycine max (soybean)
Flight seeds: 52

Ground-Based Controls

24-Hour asynchronous ground control using the Orbiter Environmental Simulator

Key Flight Hardware

BRIC-60 Canister, GN_2 Freezer

Objectives/Hypothesis

This was the second flight of this experiment that tested the hypothesis that starch concentration in plant tissue is decreased due to the effects of the space/microgravity environment and investigated possible mechanistic causes for the changes in starch concentration. Measurements were made of starch and soluble sugar concentrations, critical biosynthetic and degradative enzyme activities, localization and visualization of the starch grains and the plastids in which they are found, structural and ultrastructural makeup of different tissues within the plants, along with detailed measurements of growth, biomass partitioning, and canister atmospheric components.

Approach or Methods

Two canisters of soybeans were flown. One was frozen in space after 5 days and the other returned unfrozen for postflight harvesting. Analyses for these experiments were completed. These included measurements of growth, gas concentrations in the canisters, carbohydrate concentrations and related enzyme activity measurements in the cotyledons, and ultrastructural analysis of cotyledon, hypocotyl, and root-tissue sections.

Results

While overall biomass accumulation by the growing seedling was diminished as a result of space flight, the mobilization of reserves for the cotyledons was not affected, suggesting an increase in respiration in the space-grown plants. Analysis of the cotyledons frozen inflight revealed lower starch concentration, lower activity of the starch synthetic enzyme adenosine diphosphate glucose pyrophosphorylase, and higher activity of the sucrose synthetic enzyme sucrose phosphate synthase relative to the ground controls. Other starch and sucrose metabolic enzymes were unaffected by space flight.

Title of Study

Effects of Microgravity on Tobacco Hornworm (*Manduca sexta*) during Metamorphosis

Science Discipline

Developmental biology

Investigator	Institute
Marc E. Tischler	University of Arizona

Co-Investigator(s)	Institute
None	

Research Subject(s)

Manduca sexta (tobacco hornworm)

Flight pupae: 54 Male/Female

Ground-Based Controls

Identical canisters in 48-hour asynchronous Orbiter Environmental Simulator

Key Flight Hardware

BRIC-100 Canister

Objectives/Hypothesis

Studies on altered orientation of tobacco hornworms (*Manduca sexta*) pupa relative to gravitational field have shown changes of some amino acids, rate of adult development, and flight muscles. All of these parameters are dependent on ecdysone levels, which are elevated by reorienting the insect into a head-up, vertical position. This study was undertaken to examine the effects of microgravity on tobacco hornworm ecdysone release and subsequent development.

Approach or Methods

Three BRIC canisters with 18 tobacco hornworm (*Manduca sexta*) pupae each were launched on board the Space Shuttle. Nine days after launch, the canisters were recovered and pupae were examined.

Results

Neither the flight nor the ground controls showed significant development. Half the pharate adults were bled immediately; the other half being returned live to the University of Arizona. Of the 27 remaining flight animals, 21 began developing after removal from the sealed canisters. These pharate adults were monitored, and a few even completed development to the adult moth. Overall the flight and ground controls were in excellent agreement. The preliminary hypothesis for the failure of both the flight and ground controls to develop was that a build-up of CO_2 in the canisters anesthetized the insects, causing them to become dormant. Preflight testing was accomplished without these problems. One consideration is that the ground-testing canisters were not completely sealed, allowing sufficient air exchange. For flight, the canisters were assembled and sealed with an o-ring and vacuum grease. In the final analysis, it appears that the failure of the insects to develop was a consequence of either accumulation of CO_2 or depletion of O_2 from the BRICs.

BRIC5-1

Title of Study

Plant Embryos and Fidelity of Cell Division in Space

Science Discipline

Plant biology

Investigator	Institute
Abraham D. Krikorian	State University of New York at Stony Brook

Co-Investigator(s)	Institute
None	

Research Subject(s)

Hemerocallis (daylily cells)
Flight petri dishes: 27

Ground-Based Controls

Simultaneous ground controls maintained at Stony Brook

Key Flight Hardware

BRIC-100 Canisters

Objectives/Hypothesis

This experiment tested whether the cell division changes observed in daylily embryos during previous space flight experiments result directly from microgravity or indirectly through factors associated with water availability and uptake. Preliminary results from STS-29, STS-47, and STS-65 have shown that genetic abnormalities occur in these plants during space flight. Because ground-based studies indicate that water-related activity can impact the integrity of chromosomes, it is possible that the results observed on these flights were not due to direct effects upon the plants, but rather to indirect effects mediated by water availability to plant cells.

Approach or Methods

BRIC-100 canisters housed 27 petri dishes of daylily cells in an agar solidified medium. There was no inflight manipulation. Upon landing, 85% of the cells were chemically fixed for examination while 15% were allowed to develop for examination of postflight readaptation and recovery phenomena. Ground controls were cultured in parallel to the flight experiment.

Results

Data from this study and previous studies indicate that embryogenic cells of daylily are an excellent model system for the study of space effects on cell division, embryological development, and chromosome structure within *in vitro*-cultured cells in space. As in previous flights, flight materials did not grow as well as in ground controls. Generally speaking, flight specimens showed various manifestations of stress. Cells with chromosome breaks, bridges, and double nuclei were found in space samples and quantified. None of these abnormalities were evident within the ground controls.

Title of Study

Cellular Signal Perception and Signal Transduction

Science Discipline

Cell and molecular biology

Investigator	Institute
Ingrid Block	Deutschen Zentrum für Luft- und Raumfahrt

Co-Investigator(s)	Institute
Hemmersbach, Ruth	Deutschen Zentrum für Luft- und Raumfahrt
Sauer, Helmut W.	Texas A&M University

Research Subject(s)

Physarum polycephalum (slime mold)
Flight petri plates: 36

Ground-Based Controls

24-Hour asynchronous ground control using the Orbiter Environmental Simulator

Key Flight Hardware

BRIC-60 Canister, GN_2 Freezer

Objectives/Hypothesis

Cellular signal processing in all organisms is probably based on fundamentally similar mechanisms. The stimulus interacts with a primary receptor in order to initiate a response, mediated by signal transduction pathways. In the case of gravity as a stimulus, it has been shown that free-living single eukaryotic cells, like slime molds, often use this vector for their spatial orientation (gravitaxis) and, in addition, show distinct gravisensitivities. This experiment used slime mold cells to locate the gravireceptor and determine the interaction between signal perception and the response of the cell (signal transduction and processing).

Approach or Methods

To investigate the acceleration-stimulus signal transduction chain, a gravisensitive Myxomycete, *Physarum polycephalum* (acellular slime mold) was used. With its ameboid locomotion it represents one of the two major types of cellular motility. The plasmodia, giant cells, display a distinct gravitaxis and their intrinsic rhythmic contraction activity and cytoplasmic streaming are modulated by gravity. To determine the gravity influence on cell function, acceleration deprivation (near weightlessness in space, "0 G") was used. Thirty-six petri plates were flown on the Shuttle for 11 days. BRIC canisters were frozen in the GN_2 Freezer at two different points in the flight: nine petri plates after 2 days in space and another nine after 3 days in space. The remaining 18 petri plates were returned to Earth and frozen after recovery. Flown samples were then analyzed and compared with the ground control.

Results

Previous flight studies under variable gravity found that plasmodia immersed in water were still able to respond to acceleration changes, which proved that the gravity response in *Physarum* is based directly on gravity effects. This gravity response is relayed via parts of the cell that have a higher density than the rest of the system, such as the nuclei or the mitochondria. This BRIC-60 study demonstrates that only the level of the second messenger cAMP drops significantly with time (spent in microgravity) in the force-generating part of the cell. So, contrary to short-term gravistimulations, adaptation to 0 G leads to permanently reduced changes in cAMP. The results indicate that in *Physarum polycephalum* the second messenger cAMP is involved in gravity signalling.

CHRMX1-1

Title of Study
Chromosomes and Plant Cell Division in Space

Science Discipline
Plant biology

Investigator	Institute
Abraham D. Krikorian	State University of New York at Stony Brook

Co-Investigator(s)	Institute
None	

Research Subject(s)
Hemerocallis (daylily), *Haplopappus gracilis*
Flight plants: 25 daylilly/75 haplopappus

Ground-Based Controls
Asynchronous ground control using the Orbiter Environmental Simulator

Key Flight Hardware
Plant Growth Unit, Atmospheric Exchange System

Objectives/Hypothesis
This CHROMEX flight experiment had two primary objectives: 1) to test whether the normal rate, frequency, and patterning of cell division in the root tip can be sustained in microgravity; 2) to determine whether the fidelity of chromosome partitioning is maintained during and after flight.

Approach or Methods
Shoots derived from aseptic suspension cultures of the monocot daylily (*Hemerocallis* cv. Autumn Blaze) and tissue-cultured plantlets of the dicot *Haplopappus gracilis* were co-cultured in the Plant Growth Unit with the newly implemented Atmospheric Exchange System. All plants had their roots severed prior to flight and were grown aseptically within five Plant Growth Chambers on horticultural foam containing growth medium. This selective trimming of preformed roots resulted in the production of up to 50 newly formed roots per plant during the 5-day space flight mission. Upon recovery, space-grown root tips were fixed and subsequently examined for rates of cell division and chromosomal aberrations. Specimens were also dedicated to overall shoot and root-growth measurements. Selected individuals were successfully rescued for multi-generational postflight studies on the ground.

Results
While shoot growth was lower among the flight specimens, root growth was 40% to 50% greater in the flight materials. Root growth occurred randomly in all directions in space while being positively gravitropic in ground controls. Roots were generated: (1) laterally from preexisting roots, the tips of which were severed at the time of plantlet insertion into the growth substrate; (2) adventitiously from the basal ends of micropropagated shoots; (3) *de novo* as a purely space environment-derived generation of roots, which had its origin from roots which emerged during the period in space. The number of cell divisions observed within flight materials was uniformly lower than that observed within ground controls. Chromosomal aberrations were absent from the ground-control materials, yet present within 3% to 30% of the dividing cells within flight-specimen root tips fixed at recovery. The exact cause(s) of these abnormalities is not known, but dosimetry data suggest that radiation alone was not sufficient to explain the results.

Title of Study
Chromosomes and Plant Cell Division in Space

Science Discipline
Plant biology

Investigator	Institute
Abraham D. Krikorian	State University of New York at Stony Brook

Co-Investigator(s)	Institute
None	

Research Subject(s)
Hemerocallis (daylily), *Haplopappus gracilis*
Flight plants: 25 daylilly/75 haplopappus

Ground-Based Controls
48-Hour asynchronous ground control using the Orbiter Environmental Simulator

Key Flight Hardware
Plant Growth Unit, Atmospheric Exchange System, Gas Sampling Kit

Objectives/Hypothesis
This flight experiment was a continuation of the experiment conducted on CHROMEX-01 that flew on STS-29. There were two primary objectives: 1) to test whether the normal rate, frequency and patterning of cell division in the root tip can be sustained in microgravity; 2) to determine whether the fidelity of chromosome partitioning is maintained during and after flight.

Approach or Methods
Shoots derived from aseptic suspension cultures of the monocot daylily (*Hemerocallis* cv. Autumn Blaze) and tissue-cultured plantlets of the dicot *Haplopappus gracilis* were co-cultured in the Plant Growth Unit with the Atmospheric Exchange System. All plants had their roots severed prior to flight and were grown aseptically for 4 days within five Plant Growth Chambers on horticultural foam containing growth medium. The major change since CHROMEX-01 was the use of extensively washed horticultural form, which necessitated the addition of a wetting agent to the medium to facilitate its uptake into the foam matrix. Upon recovery, space-grown root tips were fixed and examined for rates of cell division and chromosomal aberrations. Specimens were also dedicated to overall shoot and root-growth measurements. Selected individuals were successfully rescued for multigenerational postflight studies on the ground.

Results
Root growth occurred randomly in all directions in space. In contrast, growth was uniformly positively gravitropic in ground controls. In the space flight and ground controls, both population categories produced an equivalent amount of tissue when compared to each other and maintained their characteristic root- production patterns. Seedling-derived plantlets produced roots that were numerous but relatively short. Capitulum-derived plantlets produced fewer roots, but they were on average longer than those of the seedling-derived plantlets. Thus, the clonal root phenotype was not changed in space, at least for the short duration of the experiment. However, both population categories exhibited total root-production values that were 67% to 95% greater than those obtained in their ground-control counterparts. It is proposed that microgravity brought about an altered moisture distribution pattern within the foam growth substrate, giving a more "moist", and thereby more favorable, environment for root formation.

Title of Study

Developmental and Physiological Processes Influencing Seed Set in Microgravity

Science Discipline

Plant biology

Investigator	Institute
Mary E. Musgrave	Louisiana State University

Co-Investigator(s)	Institute
None	

Research Subject(s)

Arabidopsis thaliana (mouse-ear cress)
Flight plants : 36

Ground-Based Controls

48 Hour asynchronous ground control using the Orbiter Environmental Simulator

Key Flight Hardware

Plant Growth Unit

Objectives/Hypothesis

The purposes of the CHROMEX-03 experiment were to determine the effects of microgravity on seed development and to understand the effects of weightlessness on plant reproduction.

Approach or Methods

Thirty-six *Arabidopsis thaliana* plants in the pre-flowering stage were launched. Flowering and pollination occurred during the 7-day flight. Flowering material was preserved in fixative after landing for examination by light and electron microscopy. Enzyme activity in the roots and leaves was also examined.

Results

There were striking differences between the flight-grown *Arabidopsis* plants and the ground controls. Reproductive development was aborted at an early stage in the flight material in both male and female structures. Flight foliage had significantly lower carbohydrate content than foliage of ground controls, and root alcohol dehydrogenase levels were higher in space flight tissue.

Title of Study

Chromosomes and Plant Cell Division in Space

Science Discipline

Plant biology

Investigator	Institute
Abraham D. Krikorian	State University of New York at Stony Brook

Co-Investigator(s)	Institute
None	

Research Subject(s)

Triticum aestivum (Super-Dwarf wheat)
Flight seedlings: 24

Ground-Based Controls

48-Hour asynchronous ground control using the Orbiter Environmental Simulator

Key Flight Hardware

Plant Growth Unit

Objectives/Hypothesis

Two-day-old aseptic seedlings of Super-Dwarf wheat (*Triticum aestivum*) were evaluated using the same criteria as used for two different species in CHROMEX-01 and -02. In addition, the foam cultivation protocol was compared to the agar-bag method developed by Gerard Heyenga and Norman Lewis at Washington State University in Pulman. The foam cultivation was also used for the growth of Super-Dwarf wheat within two of the remaining Plant Growth Chambers (PGCs) within CHROMEX-04.

Approach or Methods

Each of the two (out of six) Plant Growth Chambers within the Plant Growth Unit devoted to the SUNY group's effort in CHROMEX-04 were planted with 12 one-day-old wheat seedlings 1 day prior to lift-off. The foam/medium system was modified in several ways from the CHROMEX-01 and -02 experiments. These included a 33% liquid medium volume reduction, the use of kapton tape in nitex planting pocket construction, and the evaluation of an initial carbon dioxide pulse into the sealed PGCs at the time of plant insertion.

Results

Measurements were made of photosynthetic and respiratory rates of the space flight and ground-control wheat seedlings at recovery. Postflight measurements of the O_2 evolution/photosynthetic photon flux density response curves of leaf samples revealed that the CO_2-saturated photosynthetic rate at saturating light levels in space-grown plants declined 25% relative to the rate in ground-control plants. The relative quantum yield of CO_2-saturated photosynthetic O_2 evolution measured at limiting light intensities was not significantly affected. In space-grown plants, the light compensation point of the leaves increased by 33%, due likely to an increase (27%) in leaf dark-respiration rates. Related experiments with thylakoids isolated from space-grown plants showed that the light-saturated photosynthetic electron transport rate from water through photosystems II and I was reduced by 28%. These results demonstrated that photosynthetic functions were affected by the microgravity environment.

CHRMX4-2

Title of Study

Plant Metabolism and Cell Wall Formation in Space (Microgravity) and on Earth

Science Discipline

Plant biology

Investigator	Institute
Norman Lewis	Washington State University at Pullman

Co-Investigator(s)	Institute
Heyenga, Gerard	Washington State University at Pullman

Research Subject(s)

Triticum aestivum (Super-Dwarf wheat)
Flight plants: 24

Ground-Based Controls

48-Hour asynchronous ground control using the Orbiter Environmental Simulator

Key Flight Hardware

Plant Growth Unit

Objectives/Hypothesis

The purpose of this experiment was to establish differences between plants grown in microgravity and at 1 G by examining: 1) changes in rate/amount of photosynthesis and biomass production (such as roots, stems, and so forth); 2) cytological and cytochemical changes; 3) composition and amounts of plant cell-wall polymers, cellulose, hemicellulose, pectins, ligins, proteins; and 4) if possible, to determine changes in activity of key biosynthetic enzymes.

Approach or Methods

Two Plant Growth Chambers (PGCs) were utilized in positions 5 and 6. Each chamber held 12 *Triticum aestivum* (Super-Dwarf wheat) plantlets that were 2–4 days old at planting (1 day prior to launch). The nutrient pack system was utilized for plant mechanical and nutrient support. Procedures to load these chambers began approximately 4 days prior to PGU closeout. Postflight analysis was conducted on leaf blade, stems, root tip, and primary/lateral roots. Each tissue was sectioned into 2-mm segments and fixed in 3% glutaraldehyde solution. The new agar bag nutrient system utilized for this part of the experiment was compared to the State University of New York (SUNY) system, which had flown twice previously and again on this payload. The investigators shared tissues in an effort to compare the systems.

Results

Results from this study seem to indicate that microgravity does not affect cell-wall architecture (organization to such an extent that microfibril architecture is interrupted). Shoot growth was excellent. Root growth was adequate, but indications of oxygen limitation due to the agar matrix were evident.

Title of Study

Developmental and Physiological Processes Influencing Seed Production in Microgravity

Science Discipline

Plant biology

Investigator	Institute
Mary E. Musgrave	Louisiana State University

Co-Investigator(s)	Institute
None	

Research Subject(s)

Arabidopsis thaliana (mouse-ear cress)
Flight plants: 12

Ground-Based Controls

48-Hour asynchronous ground control using the Orbiter Environmental Simulator

Key Flight Hardware

Plant Growth Unit

Objectives/Hypothesis

This experiment hypothesized that a plant may become limited in gas exchange due to the lack of convective air movement in microgravity. Since plants depend on convective air movement to aid the uptake of metabolically important gases, the lack of convection may affect these processes. One process that is sensitive to oxygen levels is seed production; therefore, this study focused on the changes in seed production, which may indicate reduced oxygen transport to the plants.

Approach or Methods

Two Plant Growth Chambers (PGCs) were utilized in the Plant Growth Unit positions 3 and 4. Each chamber held six plantlets that were 14 days old at planting. The foam/agar plug nutrient system was utilized. A Warburg solution was added to the chamber to maintain CO_2 levels. Planting occurred 1 day before launch. Measurements of pollen viability and root growth were made postflight, and material was fixed for subsequent microscopy.

Results

The plants produced numerous flowers, which had a good appearance except for those in the latest developmental stages. Pollen viability was approximately 50% as assessed by fluorescein diacetate staining immediately after landing. Light microscope examination of the pollen showed a range of morphologies, from normal to collapsed, corresponding to the viability staining results. This amount of viable pollen should have been able to fertilize the flowers and initiate embryo development. However, no evidence of this was found, suggesting a pollen transfer problem. No differences between flight and ground material were observed in leaf or bract structure at the light microscope level.

CHRMX5-1

Title of Study

Microgravity Effects on Early Reproductive Development in Plants

Science Discipline

Plant Biology

Investigator	Institute
Mary E. Musgrave	Louisiana State University

Co-Investigator(s)	Institute
None	

Research Subject(s)

Arabidopsis thaliana (mouse-ear cress)
Flight seedlings: 30

Ground-Based Controls

48-Hour asynchronous ground control using the Orbiter Environmental Simulator

Key Flight Hardware

Plant Growth Unit, Atmospheric Exchange System

Objectives/Hypothesis

The primary objective of CHROMEX-05 was to determine if plants grown in space are infertile due to microgravity, or some other environmental factor like the lack of convection. This was the third flight of this experiment. An Atmospheric Exchange System was flown on this flight but not on the two previous, to determine if air movement has an effect on reproductive development.

Approach or Methods

For this experiment, 13-day-old mouse-ear cress (*Arabidopsis thaliana*) seedlings were grown in space and were compared to plants grown under similar conditions on Earth. These plants initiated flowering shoots while on orbit. Plants were retrieved from the orbiter 2–5 hours after landing and reproductive material was immediately processed for *in vivo* observations of pollen viability, pollen tube growth, and esterase activity in the stigma, or fixed for later microscopy. An Atmospheric Exchange System was used on this flight to provide slow purging of the plant growth chambers with filtered cabin air.

Results

Under the conditions of this flight, the space flight plants had reproductive development comparable to the ground controls, and immature seeds were produced. These results represent the first report of successful plant reproduction on the Space Shuttle.

Title of Study

Regulation of Cell Wall Polymers by Microgravity

Science Discipline

Plant biology

Investigator	Institute
Elizabeth E. Hood	Pioneer Hi-Bred International

Co-Investigator(s)	Institute
Anderson, Ken	Pioneer Hi-Bred International
Anderson, Anne J.	Pioneer Hi-Bred International

Research Subject(s)

Triticum aestivum (Super-Dwarf wheat)
Flight plants: 72

Ground-Based Controls

48-Hour asynchronous ground control using the Orbiter Environmental Simulator

Key Flight Hardware

Plant Growth Unit, Atmospheric Exchange System

Objectives/Hypothesis

Plants grown in microgravity are subject to perturbations in growth and development, such as the deposition of cell wall polymers, specifically lignin. Lignin has a major role in the structural integrity, health, and productivity of plants. Its deposition is under the control of key peroxidase enzymes. In this experiment, the effects of microgravity on cell wall structure including lignin deposition, hydrogen peroxide concentration, calcium localization and cell wall anatomy in Super-Dwarf wheat (*Triticum aestivum*) were examined.

Approach or Methods

Seventy-two plants (12 in each of six Plant Growth Chambers) were flown for 8 days. Ground-control plants were grown under similar environmental conditions on a 48-hour delay in the Orbiter Environmental Simulator at KSC. Salt-soluble extracellular proteins were extracted from leaves, stems, and roots of plants grown in microgravity and from control plants. Total peroxidase activity in the apoplastic fraction of these tissues was measured using spectrophotometric methods with guicol or chloronaphthol as a substrate. Isozymes were identified on isoelectric focusing gels. Cell wall tensile strength was measured with an Instron strain gauge. Root and shoot length and mass measurements were taken. Ethylene and carbon dioxide accumulations were determined. Tissues were stained for lignin and peroxide content.

Results

Wheat plants grown in microgravity exhibited reduced ethylene production and stronger, more localized histochemical staining for lignin and peroxide deposition, compared to the Earth-grown counterparts. The ageotropic (randomly growing) roots of the space-grown plants were also longer, with slightly increased wall extensibility (tenacity). A pI (the pH for a molecule existing in an uncharged state) 5.7 peroxidase was induced or up-regulated in root extracts from space-grown plants. The results suggest that a lack of gravity produces pleiotropic effects in plants that alter many aspects of their physiology and development.

Title of Study

Bending Stiffness of the Tibia in Young Rhesus Monkeys after Two Weeks in Space

Science Discipline

Bone and calcium physiology

Investigator	Institute
Sara B. Arnaud	NASA Ames Research Center

Co-Investigator(s)	Institute
Hutchinson, T.	NASA Ames Research Center
Bakulin, A.V.	Institute of Biomedical Problems
Steele, C.R.	Stanford University

Research Subject(s)

Macaca mulatta (rhesus monkey)

Flight: 2 Male

Ground-Based Controls

Flight simulation: 2, Vivarium: 4

Key Flight Hardware

None

Objectives/Hypothesis

Localized demineralization has been documented in the proximal tibia of young monkeys after 2 weeks of space flight. It is not known whether this is the result of microgravity effects or of chair restraint during flight. It is also not known if the acquired mineral deficit in the localized area impairs the function of the whole tibia and its loading capability. The purpose of this experiment was to assess the effects of inactivity during chair restraint and space flight through the analysis of bending stiffness measurements obtained from intact flight and ground-control monkeys.

Approach or Methods

Two male rhesus monkeys were flown on the unmanned Russian biosatellite Cosmos for 11.5 days. Cross sectional bone stiffness measurements (EI, Nm^2) were taken from the tibia of flight monkeys 7 days before launch, the day of launch, the day of landing, and 7, 20, and 30 days after landing. Measurements were also made on five ground-control monkeys in restraint chairs built to resemble biosatellite conditions. Measurements were made using the Mechanical Response Tissue Analyzer (MRTA). The MRTA applies a low frequency vibration with a magnetic shaker to the center of a long bone. The resonant response is used to compute bending stiffness. The instrument was validated by comparison of *in vivo* EI measurements with standard materials testing in the same bones post-mortem ($r2 = 0.95$, $p<0.0001$).

Results

When all EI values were combined, EI was higher in the right tibia than the left. An average EI decrease of 33% was seen in ground control monkeys after 2 weeks of chair restraint and was still 28% lower than basal 1 week later. In contrast, 7 days after 2 weeks exposure to microgravity, tibial EI in two flight monkeys was similar to pre-launch values. The factors that account for these observations in mechanical properties of juvenile monkeys are not identified, but dehydration and weight loss in flight but not ground-control monkeys suggests metabolic changes rather than bone remodeling as underlying causes of the changes.

Title of Study

DEXA Measurements: Cosmos 2229 Rhesus Flight Experiment

Science Discipline

Bone and calcium physiology

Investigator	Institute
Adrian LeBlanc	Baylor College of Medicine

Co-investigators	Institute
Evans, H. Krug	Krug International
Shackleford, L.	NASA Johnson Space Center
West, S.	Baylor College of Medicine
Rakhymanov, A.	Institute of Biomedical Problems
Bakulin, A.	Institute of Biomedical Problems
Oganov, Victor S.	Institute of Biomedical Problems

Research Subject(s)

Macaca mulatta (rhesus monkey)

Flight: 2 Male

Ground-Based Controls

Flight simulation: 2, Vivarium: 4

Key Flight Hardware

None

Objectives/Hypothesis

Previous space flights have documented that significant bone and muscle atrophy occurs during weightlessness. These effects may require that counter measures be taken for their prevention. It is hypothesized that short-duration weightlessness will decrease bone formation and increase bone resorption, and that this will be apparent as a decrease in bone mineral immediately after flight or during the first few weeks following flight. Further, it is hypothesized that short-duration weightlessness will result in significant muscle atrophy that will be rapidly recovered following return to 1 G. The objective of this experiment was to determine, using regional and whole body dual energy X-ray absorptiometry (DEXA), if bone and lean body mass are reduced in the rhesus monkey after exposure to short-duration weightlessness.

Approach or Methods

Three groups of monkeys were used for this experiment: chaired control, caged control, and flight groups. DEXA scans were performed on flight monkeys at the following four times: 53 days before launch; and 3, 16, and 33 days after launch. Five body regions were statistically analyzed for changes in bone mineral density (BMD), bone mineral content (BMC), lean body mass, and body fat. For analysis, data for the chaired control group was combined with the caged control group, resulting in two groups, control and flight. The mean difference of the two groups was compared for each measurement type in each region.

Results

There was no evidence for bone loss through BMC or BMD values during the flight period. There was evidence that BMC and BMD may have increased during the reambulation period relative to control animals. Results show evidence of lean tissue loss in the arms and legs of flight monkeys as compared to controls. The total body change in lean tissue was not statistically significant. During the reambulation postflight period, there was evidence of increased lean mass in flight animals relative to controls. There was no significant change in body fat measurements.

Title of Study

Calcium Metabolism and Correlated Endocrine Measurements in Primates during Cosmos

Science Discipline

Bone and calcium physiology

Investigator	Institute
Christopher E. Cann	University of California, San Francisco

Co-Investigator(s)	Institute
Buckendahl, Patricia	University of California, Santa Cruz
Arnaud, Claude D.	University of California, San Francisco

Research Subject(s)

Macaca mulatta (rhesus monkey)

Flight: 2 Male

Ground-Based Controls

Vivarium: 4

Key Flight Hardware

None

Objectives/Hypothesis

Previous Cosmos studies have shown an increase in bone resorption after 5 days of space flight. They have also shown a decrease in bone mineralization and growth. These effects may be due to microgravity or the stress of space flight. The purpose of this experiment was to examine changes in bone and bone regulation parameters to further understand the mechanisms that regulate bone growth and strength.

Approach or Methods

Two male rhesus monkeys were flown on the biosatellite Cosmos 2229. Measurements were taken on both flight monkeys and ground control monkeys. The length of the tibia, radius, and ulna were measured at pre- and postflight intervals to determine changes in bone length. Serum levels of calcium, parathyroid hormone, osteocalcin, and 25-hydroxy vitamin D were measured pre- and postflight to determine regulatory factors that may affect bone parameters.

Results

Cosmos 2229 endocrine studies suggest an increase in serum calcium immediately postflight, but it is not as convincing as the data from human studies obtained inflight. There is a clear decrease in 25-OH vitamin D during the postflight period, but beginning later, not immediately postflight. This may be a response to changes in dietary intake of vitamin D during the flight and postflight periods. There was no change in serum osteocalcin (an indicator of bone formation), but this parameter is not as sensitive as those observable by histomorphometry for quantification of changes in bone formation.

Title of Study

Circadian Rhythms and Temperature Regulation in Rhesus Monkeys during Space Flight

Science Discipline

Chronobiology

Investigator	Institute
C.A. Fuller	University of California, Davis

Co-Investigator(s)	Institute
Hoban-Higgins, T.M.	University of California, Davis
Griffin, D.W.	University of California, Davis
Klimovitsky, V.	Institute of Biomedical Problems
Alpatov, A.M.	Institute of Biomedical Problems
Magedov, V.	Institute of Biomedical Problems

Research Subject(s)

Macaca mulatta (rhesus monkey)

Flight: 2 Male

Ground-Based Controls

Flight simulation: 2, Vivarium: 4

Key Flight Hardware

Cosmos 2229 Circadian Rhythm/Temperature Regulation Hardware

Objectives/Hypothesis

Living organisms have evolved under the unvarying level of Earth's gravity. Physiological and behavioral responses to changes in gravity are not completely understood. Exposure to altered gravitational environments has profound effects on physiological and behavioral systems, including body temperature regulation and circadian rhythms. One objective of this study was to examine the influence of microgravity on temperature regulation and circadian time-keeping systems in rhesus monkeys. Another objective was to find insights into the physiological mechanisms that produce these changes.

Approach or Methods

Two male rhesus monkeys were used in the experiment. The animals were studied in a 3–5 day baseline control experiment verifying all procedures and collecting baseline data prior to the flight of the biosatellite. The animals were flown for 11 days and 16 hours and subsequently studied in a 3-day postflight experiment that began 13 days after flight. Six weeks after recovery, a second, longer, control study was performed. In all studies, monkeys were housed in a 24-hour light/dark cycle. The lights were on for 16 hours and off for 8 hours. The atmosphere inflight was maintained at sea level partial pressure and barometric pressure. The following parameters were measured: brain temperature, axillary temperature, head skin temperature, ankle skin temperature, heart rate, motor activity, and ambient temperature at the upper portion of the chair. Brain temperature measurements were recorded at 1-minute intervals. All other measurements were recorded at 10-minute intervals.

Results

Circadian rhythms persisted in both subjects during preflight, inflight, and postflight. The phase of the brain temperature (T_{br}) rhythm was delayed in flight compared to the control while the amplitude and mean T_{br} were similar. The phase of the axillary temperature (T_{ax}) rhythm was delayed during flight. The T_{ax} rhythm amplitude was larger during flight than control; there was no difference in mean T_{ax} between flight and controls. The mean heart rate (HR) decreased in flight, compared to controls. The amplitude of the HR rhythm was also lower inflight. The phase of the activity rhythm was also later inflight than in the postflight control study.

Title of Study

Plasma Hormone Concentration in Rhesus Monkeys after Space Flight

Science Discipline

Endocrinology

Investigator	Institute
Richard E. Grindeland	NASA Ames Research Center

Co-Investigator(s)	Institute
Dotsenko, M.A.	Institute of Biomedical Problems
Mukku, V.R.	Genentech, Inc.
Gosselink, K.	NASA Ames Research Center

Research Subject(s)

Macaca mulatta (rhesus monkey)

Flight: 2 Male

Ground-Based Controls

Flight simulation: 2, Vivarium: 4

Key Flight Hardware

None

Objectives/Hypothesis

Previous studies have shown changes in plasma concentrations of several hormones in humans and rats after space flight. In order to further understand the effects of space flight on endocrine function, the circulating levels of growth hormone, insulin-like growth factor I (IGF-I), thyroid hormones, cortisol, and testosterone in young male rhesus monkeys were investigated following 12.5 days in space.

Approach or Methods

Cortisol, testosterone, and thyroid hormones were measured using commercially obtained radioimmunoassay (RIA) kits. Serum IGF-I was measured by RIA using recombinant human IGF-I as standard, and growth hormone was measured by an *in vitro* bioassay. Blood samples were obtained about 7 weeks preflight; at R+0, R+3, R+11, and R+17 (recovery from flight + days); and at similar times following a space flight simulation beginning 45 days after recovery from space. Hormone values for flight or simulation animals falling outside the control mean ± 2SE were considered significant ($p<0.05$).

Results

Due to limited serum sample at R+0, cortisol was not measured. At R+3 and R+11, cortisol was decreased from control but returned to control at R+17. Cortisol levels from all other sample times were similar to preflight or control values. Testosterone levels in control animals were low, as expected, in the sexually immature monkeys. At R+0, testosterone was 50% less in flight monkeys, but at all other times was similar to controls. At R+0 and R+3, thyroxine (T4) concentrations in flight animals were similar to controls. At R+11, T4 levels fell for unknown reasons. Following the R+45 simulation, control and simulation animals had 25% lower T4 levels, but control animals showed a prompt return to usual values whereas simulation animals did not. Triiodothyronine (T3) concentrations were reduced by 80% immediately after flight and by 30% 3 days later. At R+11, T3 had returned to control levels. Growth hormone levels were reduced by 50% and 92% in the two flight animals at R+0 and remained at suppressed levels at the last postflight sampling time of R+17. IGF-I levels were also reduced in both monkeys after flight and returned to normal in one monkey after 11 days but not in the other.

Title of Study

Rhesus Monkey Immunology Study

Science Discipline

Immunology

Investigator	Institute
Gerald Sonnenfeld	University of Louisville

Co-Investigator(s)	Institute
Davis, Stephanie	University of Louisville Schools of Medicine and Dentistry
Taylor, Gerald R.	NASA Johnson Space Center
Mandel, Adrian D.	NASA Ames Research Center
Lesnyak, Andrei T.	Institute of Biomedical Problems
Fuchs, Boris B.	Institute of Human Morphology
Konstantinova, Irina V.	Institute of Biomedical Problems

Research Subject(s)

Macaca mulatta (rhesus monkey)

Flight: 2 Male

Ground-Based Controls

Synchronous: 4, Vivarium: 2

Key Flight Hardware

None

Objectives/Hypothesis

This experiment on the Cosmos 2229 mission was designed to begin to determine the suitability of the rhesus monkey as a surrogate for humans in space immunology research. Two tests were carried out to examine the effects of space flight on the capacity to resist infection. One tested the responsiveness of rhesus bone marrow cells to recombinant human granulocyte/macrophage colony stimulating factor (GM-CSF). The other test used blood and bone marrow cells to examine microgravity-induced changes in staining patterns against a variety of antibodies.

Approach or Methods

Tissue samples for preflight studies were taken 1.5 months prior to flight. Samples were also taken at various times from 1 to 12 days postflight. Two types of tissue samples were taken: peripheral blood and bone marrow. Bone marrow cells were exposed to recombinant human GM-CSF, incubated for 7 days, and examined for colony growth. Bone marrow and blood cells were also exposed to one of eight different antibody treatments. Before exposure, bone marrow cells were suspended in supplemented McCoy's media with 10% fetal bovine serum (FBS), centrifuged, and separated from the supernatant. Blood cells were lysed, centrifuged, resuspended, centrifuged again, and separated from the supernatant. After exposure to the antibody stains, the cells were fixed and analyzed to determine the presence of antigenic markers.

Results

The exposure of the two rhesus monkeys to microgravity resulted in inhibition of the response of bone marrow cells to GM-CSF and depression of the percentage of peripheral blood and bone marrow leukocyte antibody markers. B cells were less affected than T cells. The parameters tested in the study appeared to return towards a more normal level by 3 days postlanding, but experienced a second drop by 12 days postlanding. Postflight testing could not be ruled out as a contributor to the second drop in immunological response. The results from Cosmos 2229 differed from previous flights, which had utilized rats as the experimental organism, indicating a species effect on immunological response to space flight.

Title of Study

Rhesus Monkey Metabolism during Space Flight: Measurement of Energy Expenditure Using the Doubly Labeled Water ($^2H_2{}^{18}O$ DLW) Method

Science Discipline

Metabolism and nutrition

Investigator	Institute
C.A. Fuller	University of California, Davis

Co-Investigator(s)	Institute
Stein, T. Peter	University of Medicine and Dentistry of New Jersey
Griffin, D.W.	University of California, Davis
Dotsenko, M.A.	Institute of Biomedical Problems
Korolkov, V.I.	Institute of Biomedical Problems

Research Subject(s)

Macaca mulatta (rhesus monkey)
Flight: 2 Male

Ground-Based Controls

Synchronous: 4, Flight simulation: 2, Vivarium: 4

Key Flight Hardware

None

Objectives/Hypothesis

In theory, the energy requirements of larger mammals should be decreased in the microgravity space flight environment. The objective of this study was to determine the effect of space flight on mean daily energy expenditure in rhesus monkeys.

Approach or Methods

The doubly labeled water method for measuring energy expenditure is simple, non-invasive, and highly accurate. If doubly labeled water is given orally, it mixes with the body water in about 3 hours. The two isotopes then leave the body at different rates. (Labeled hydrogen leaves as water, mainly in the urine, whereas labeled oxygen leaves both as water and exhaled labeled carbon dioxide). Thus the turnover rate of isotopic hydrogen and oxygen-labeled water differ, and that difference is proportional to the rate of carbon dioxide production. Urine was used to sample body water. Energy expenditure was measured for the two flight monkeys over a 4-day period preflight. Three days preflight, the monkeys were redosed with doubly labeled water. The urine was sampled again preflight and immediately postflight.

Results

In this experiment, the values for mean inflight energy expenditure were significantly less than the preflight values. The approximate 30% decrease between the flight subjects and ground controls was found to be statistically significant.

Title of Study

Morphologic and Metabolic Properties of Single Muscle Fibers in Hindlimb Muscles of the Rhesus

Science Discipline

Muscle physiology

Investigator	Institute
Sue C. Bodine	University of California, San Diego

Co-Investigator(s)	Institute
Pierotti, David J.	University of California, San Diego School of Medicine; Veterans Administration Medical Center
Edgerton, V. Reggie	University of California, Los Angeles

Research Subject(s)

Macaca mulatta (rhesus monkey)

Flight: 2 Male

Ground-Based Controls

Vivarium: 5

Key Flight Hardware

None

Objectives/Hypothesis

Previous studies on rats have shown that within 7 days of muscle unloading, there is considerable muscle atrophy and a small increase in the percentage of muscle fibers that express fast myosin isoforms, mainly within slow muscles. These responses seem to be dependent on the function of the muscle and on its original myosin composition. Two questions have arisen from these studies: 1) What are the physiological signals that trigger these changes, and 2) How do these responses in rats compare to other animals? The purpose of this study was to further define the effects of space flight on selected morphology and metabolic properties of single muscle fibers from selected extensor and flexor muscles of the rhesus monkey.

Approach o. Methods

Muscle biopsies were taken from two independent sites (one was taken 90–98 days prior to flight, the other was taken 2–5 days after flight) in the soleus (Sol), medial gastrocnemius (MG), tibialis anterior (TA), and the vastus lateralis (VL) muscles. Fiber cross-sectional area and succinate dehydrogenase (SDH) activity were determined for individual fibers (50–80 fibers) in a 10-µm cross section. Fibers were classified as type I (slow), type IIa (fast), or type IIb (fast) based on monoclonal antibodies specific for myosin heavy chains. To assess for differences in fiber cross section area after flight, a sample of 200–500 fibers was measured from tissue cross section stained with an antibody specific for laminin, a protein in the basal lamina surrounding the muscle fiber.

Results

The TA muscle showed significant atrophy in both flight monkeys (flight monkeys were numbered 151 and 906). In contrast, the Sol and MG of 906 showed a significant increase in size after flight, whereas in 151, the muscles showed atrophy. In the Sol of 151 there was a decrease in SDH of all fiber types; however, the decrease in size was limited to type IIa and hybrid fibers. In contrast, the Sol of 906 exhibited an increase in SDH activity for all fiber types and a size increase for fast and hybrid fibers. The MG of 151 showed a decrease in size and SDH activity in all fiber types. The MG of 906 showed an increase in size and a decrease in SDH activity. The TA of 151 had a decrease in SDH activity in the type I and type IIa fibers and a decrease in size of the type IIb fibers. The TA of 906 had a decrease in SDH activity and size for all fiber types.

C2229-9

Title of Study

Functional Neuromuscular Adaptation to Space Flight

Science Discipline

Muscle physiology

Investigator

V. Reggie Edgerton	University of California, Los Angeles

Co-Investigator(s)	Institute
Roy, Roland R.	University of California, Los Angeles
Hodgson, John A.	University of California, Los Angeles

Research Subject(s)

Macaca mulatta (rhesus monkey)

Flight: 2	Male

Ground-Based Controls

Flight simulation: 2, Vivarium: 3

Key Flight Hardware

Cosmos 2229 Neuromuscular Hardware

Objectives/Hypothesis

Experiment objectives were to determine the effects of the absence of weight support on flexor (tibialis anterior) and extensor (soleus, medial gastrocnemius, and vastus lateralis) muscles of the leg. The study will also focus on the relative importance of activity (as measured by intramuscular electromyography) and force (as measured by a tendon force transducer) on the adaptation of muscle to microgravity.

Approach or Methods

Activity of different parts of motor control systems and peripheral motor mechanisms were studied inflight, as well as pre- and postflight, during active performance of motor tasks. A Tendon Force Sensor was surgically implanted into each flight subject on the distal tendon of the medial gastrocnemius of the left leg. EMG electrodes were implanted in the soleus, medial gastrocnemius, tibialis anterior, and vastus lateralis muscles of the left leg. Muscle biopsies were also taken from these four muscles in the right leg. Preflight histograms for soleus and medial gastrocnemius activity were taken during 24 hours of cage activity for one of the flight monkeys and three control animals. Pre- and postflight chair trials were done for the force recordings. Inflight data for the Tendon Force Sensor was generated by a monkey using its left leg to perform a sinusoidal lever movement against a changing torque. EMG activity was recorded for all four implanted muscles during flight.

Results

One of the flight animals had a defective force transducer, which was not connected during flight. The transducer in the other animal drifted to such a degree that it was outside the measurable range during flight. However, postflight chair trials showed that they were still functional and that the transducer life was sufficient for this type of experiment. The monkeys performed the motor tasks poorly during flight, and the EMG signals were clipped due to the amplifiers being set at high gains. Some data analysis was accomplished despite the clipped signals. The flight EMG recording suggests that significant changes in muscle control may occur in space flight.

Title of Study

Reduction of Ocular Counter-Rolling by Adaptation to Space

Science Discipline

Neurophysiology

Investigator	Institute
Bernard Cohen	Mount Sinai School of Medicine

Co-Investigator(s)	Institute
Dai, M.	Mount Sinai School of Medicine
McGarvie, L.	Mount Sinai School of Medicine
Kozlovskaya, I.	Institute of Biomedical Problems
Sirota, M.	Institute of Biomedical Problems
Raphan, T.	Brooklyn College of City University of New York

Research Subject(s)

Macaca mulatta (rhesus monkey)

Flight: 2 Male

Ground-Based Controls

Flight simulation: 2, Vivarium: 4

Key Flight Hardware

None

Objectives/Hypothesis

Although the average head angular movements in space does not change, stimulation of semicircular canals with pitch and torsional head movement at high frequency may be reduced due to a lack of locomotional forces. Consistent with this, little change has been found in the angular horizontal vestibulo-ocular reflex (VOR). On the other hand, the otolith organ, with its dependence on gravity, should undergo changes when in microgravity. A reinterpretation of otolith input has been proposed in which a linear force sensed by the otolith is interpreted as translational. The purpose of this experiment was to examine changes in the VOR and the hypothesis that there is a shift in the yaw axis orientation vector of velocity storage from a gravitational frame of reference to a body frame of reference.

Approach or Methods

Horizontal and vertical eye movements were measured using a magnetic scleral search coil implanted in the frontal plane. Ocular torsion (roll) about the optic axis was recorded with a magnetic scleral search coil implanted on the top of one eye. Ocular counter rolling (OCR) was studied using static tilts of 90 degrees and off vertical axis rotation. Roll VOR was measured during steps of velocity about a naso-occipital axis with the monkey prone and during sinusoidal oscillation with the animal upright. Spatial orientation of velocity storage was examined using optokinetic nystagmus and optokinetic after nystagmus.

Results

Static and dynamic OCR was dramatically reduced by about 70% in both monkeys after space flight, with no apparent recovery in the magnitude of torsion over 11 days of testing. This was not seen in ground control monkeys. Roll VOR was also decreased. These data indicate long lasting depression of torsional or roll eye movement after adaptation to microgravity. Before flight, yaw axis orientation vectors of velocity storage were closely aligned to the spatial vertical axis. After flight, there was a significant shift of the yaw axis toward the body axis. The major finding of these experiments is that the torsional otolith-ocular reflex, induced by head tilt with regard to gravity, was substantially reduced in the two flight monkeys after adaptation to space, and that the reduction in OCR persisted for a prolonged period after reentry.

Title of Study

Studies of Vestibular Neurons in Normal, Hyper- and Hypogravity

Science Discipline

Neurophysiology

Investigator	Institute
Manning J. Correia	University of Texas Medical Branch at Galveston

Co-Investigator(s)	Institute
Kozlovskaya, Inessa B.	Institute of Biomedical Problems
Sirota, Michoil B.	Institute of Biomedical Problems
Dickman, J.D.	University of Mississippi Medical School
Perachio, A.A.	University of Texas Medical School

Research Subject(s)

Macaca mulatta (rhesus monkey)
Flight: 2 Male

Ground-Based Controls

Vivarium: 5

Key Flight Hardware

Cosmos 2229 Neurovestibular Hardware

Objectives/Hypothesis

Two types of neurons were studied in this experiment: horizontal (lateral) semicircular canal afferents and type I or type II vestibular nuclei neurons found in the medial vestibular nucleus. The purpose of this study was to gain an understanding of neural adaptation of the semicircular canals to microgravity and to compare results to the previous study performed on Cosmos 2044.

Approach or Methods

Monkeys were implanted with electrodes to monitor neuronal activity. Recordings were made during pre- and postflight studies from 118 semicircular canal afferents and 27 vestibular nucleus neurons from seven rhesus monkeys. Five of these monkeys were ground controls and two were flight subjects. One hundred and thirty-seven pulse rotation protocols were executed. Rotation protocols for the semicircular canals included tests of spontaneous discharge, a pulse rotation test, a sum of sines test, and a sinewave test. Usable data was obtained from 127 horizontal afferents concerning spontaneous discharge. Rotation protocols for the vestibular nuclei neurons included a spontaneous sinusoidal discharge test, oscillation at 0.2, 0.5, and 1.0 Hz, pulse constant velocity of 60 degrees per second, and a sum of sines stimulus covering the bandwidth from 0.02 Hz to 1.0 Hz.

Results

The mean spontaneous rate varied from 128 spikes per second during preflight tests to 92 spikes per second during postflight tests, for a change of 28%. The best filtered neural adaptation operator (k) and the gain of pulse response were decreased during postflight compared to preflight. This contrasts with results obtained from Cosmos 2044. The best filtered gain and k values for the sum of sines were slightly elevated postflight. For periodic stimuli (pulse and sine waves) no change was found in gain and neural adaptation postflight. This is different from results found in 2044 but may be attributable to differences in experimental procedures.

Title of Study

Adaptation to Microgravity of Oculomotor Reflexes

Science Discipline

Neurophysiology

Investigator	Institute
David L. Tomko	NASA Ames Research Center

Co-Investigator(s)	Institute
Kozlovskaya, I.B.	Institute of Biomedical Problems
Paige, G.D.	University of Rochester Medical School
Badakva, A.M.	Institute of Biomedical Problems

Research Subject(s)

Macaca mulatta (rhesus monkey)

Flight: 2	Male

Ground-Based Controls

Vivarium: 3

Key Flight Hardware

None

Objectives/Hypothesis

The objective of these experiments was to study the linear vestibulo-ocular reflexes (LVORs) during gravity receptor stimulation (linear acceleration) before and after space flight. The LVOR is likely to change during exposure to microgravity, since it is primarily controlled by the gravity-sensing otoliths. These experiments will characterize the re-adaptation of otolith reflexes to Earth's gravity after exposure to microgravity.

Approach or Methods

Pre- and postflight response characteristics were measured during passive head movements at two stimulus frequencies, 1.5 and 5.0 Hz, in darkness (LVOR), and during viewing of a head fixed (visual suppression-VSLVOR) or an Earth-fixed (visual linear-VLVOR) visual scene. Motion was delivered along the inter-aural (IA), naso-occipital (NO), and dorso-ventral (DV) head axes, as well as along intermediate oblique ones. Angular VORs were recorded during sinusoidal yaw, pitch, or roll motion delivered manually with Earth-fixed visual targets (VVOR) during yaw and pitch, and with animal-fixed visual targets during roll. Data acquisition and analysis were done on PC-based programs. Response gain, response phase, gaze position, and vergence state were calculated. The gain and phase of differentiated, de-saccadded eye position recordings were calculated using Fourier analysis.

Results

LVORs compensatory for head displacement were recorded during IA, DV, NO, and intermediate axis motion. All responses were affected by visual target distance. NO responses were also affected by gaze direction. AVORs during yaw and pitch had roughly compensatory gains, while torsional gains of between 0.4 and 0.7 were recorded. Both flight monkeys had lower AVOR gain in response to pitch and yaw head movements immediately postflight. During IA and DV head motion at 5 Hz, subject M906 had larger reductions in the slope of the function relating LVOR sensitivity to vergence that did not recover by R+39 hours. Subject M151 displayed similar responses under the same conditions. During NO head motion, pre- and postflight responses for subject M151 were similar to one another, while responses of subject M906 were smaller and more variable postflight.

Greenhouse 1-1

Title of Study

Integrated Plant Experiments on Mir

Science Discipline

Plant biology

Investigator	Institute
Frank B. Salisbury	Utah State University

Co-Investigator(s)	Institute
Sytchev, Vladimir	Institute of Biomedical Problems
Bingham, Gail	Utah State University
Carman, John	Utah State University
Campbell, William	Utah State University
Bubenheim, David	NASA Ames Research Center
Yendler, Boris	NASA Ames Research Center
Levinskikh, Margarita	Institute of Biomedical Problems
Podolsky, Igor	Institute of Biomedical Problems
Chernova, Lola	Institute of Biomedical Problems
Ivanova, Irene	Institute of Biomedical Problems
Berkovitch, Juli	Institute of Biomedical Problems
Mashinsky, Alexander	Institute of Biomedical Problems
Nechitalio, Galina	Moscow Mission Control Center

Research Subject(s)

Triticum aestivum L. (Super-Dwarf wheat)
Seeds planted: 104, Germinated and grew: 47

Ground-Based Controls

Delayed synchronous

Key Flight Hardware

Gas Exchange Measurement System and various kits, Svet Greenhouse (provided by RSA)

Objectives/Hypothesis

The primary objective of Greenhouse 2 was to perform a seed-to-seed experiment to determine the effect of microgravity on the productivity of crop plants, specifically, Super-Dwarf wheat. If plants could grow in microgravity through a complete life cycle (seed to seed), this would show that there were no stages so sensitive to microgravity that growth would be interrupted in space. The chemical and biochemical composition and structural characteristics of the plants were also to be studied. Additional objectives were to determine the effects of microgravity on photosynthesis, respiration, transpiration, stomatal conductance, and water use, and to evaluate the Mir Svet Gas Exchange Measurement System (GEMS) technology.

Approach or Methods

Seed planting occurred during Mir 19. Plant development and hardware were monitored daily. Observations, photographs, and video images were taken approximately once per week. On five arbitrary dates, harvested samples were fixed and stored in fixative kits or dried and stored with desiccant. Some equipment and all samples were returned to Earth on STS-74 for postflight analysis.

Results

Three days after planting and 1 day after the lamps were turned on, three of six double-lamp sets failed. Sometime during the next 4 weeks, another lamp set failed. The resulting irradiance was barely enough to keep the plants alive but not enough to support typical wheat growth. The controller also failed, so the lamps had to be turned on and off manually each day, resulting in highly erratic photoperiods. As a result of these failures, although most plants survived for most of the 90 days from planting to harvest, they were only slightly larger than seedlings that can grow in darkness using resources stored in the seeds. A synchronized ground control simulated irradiance, temperature, photeperiod, and CO_2 levels of the Mir experiment but not atmospheric gas contaminants (notably, ethylene) in the Mir cabin. The control plants were similar in appearance to the space plants although they produced sterile heads (no seeds). Much was learned in spite of the lamp and controller failures: sample fixation was highly successful, the GEMS technology worked perfectly, and much was learned about how to maintain a suitable moisture level in the substrate.

Title of Study

Chondrogenesis in Micromass Culture of Mouse Limb-Bud Mesenchyme Exposed to Microgravity (CELLS)

Science Discipline

Bone and calcium physiology

Investigator	Institute
P. Jackie Duke	University of Texas

Co-Investigator(s)	Institute
None	

Research Subject(s)

Mus musculus (mouse) embryo cells
Cell culture chambers per treatment: 40

Ground-Based Controls

Delayed 2-hour controls

Key Flight Hardware

Biorack US3 Experiment Hardware, Syringe Racks

Objectives/Hypothesis

The effect of microgravity on cartilage development is important due to the critical role of chondrogenesis in skeletal development through endochondral ossification. *In vivo* studies have indicated altered cell kinetics in microgravity, but systemic effects are a contributing factor. The CELLS experiment was designed to determine whether cells sensitive to microgravity *in vivo* would retain their sensitivity *in vitro*. The hypothesis was that cell cultures in space would produce less cartilage, less Type II collagen, and less cartilage proteoglycan, and that the aggregative state of the collagen and proteoglycan produced by cells would be different ultrastructurally from that of 1 G cells.

Approach or Methods

Micromass cultures were obtained from the hind and fore limbs of 12.5-day mouse embryos. Cultures were exposed to four different experimental conditions inside the Biorack facility: microgravity (flight), 1 G (flight), 1 G ground, and 1.4 G ground centrifuge. A set of cultures was fixed every 24 hours and medium was frozen for further biochemical analysis. Some samples were examined postflight using scanning electron microscopy (SEM) and transmission electron microscopy (TEM). Other samples were stained with Alcian Blue and examined using light microscopy to determine cartilage growth and the size and number of nodules per unit area. Immunohistochemistry was performed to locate and study the relation between proteoglycans and collagens. Enzyme-linked-immunosorbent-assays (ELISA) were performed to determine collagen II production.

Results

Significant detachment of cell layers occurred in all groups. In areas where layers were intact, nodules that formed were of varying sizes, but there was no difference in size or number between flight and ground cultures. SEM samples show differences between ground and flight cultures by day 4. Flight cultures formed aggregates of cells with abnormally smooth surfaces. Flight cultures also exhibited unusual ruffled structures ranging in complexity from a single sheet to a rosette. TEMs show that within flight cell cultures, cells did undergo a shape change from flattened to rounded that is associated with chondrogenesis, but the associated proliferation of rough endoplasmic reticulum (RER) and production of matrix did not occur.

Title of Study

Cell Division, Mitotic Recombination and Onset of Meiosis by Yeast Cells during Space Flight (YEAST)

Science Discipline

Cell and molecular biology

Investigator	Institute
Carlo V. Bruschi	East Carolina University

Co-Investigator(s)	Institute
Esposito, Michael S.	Lawrence Berkeley Laboratory

Research Subject(s)

Saccharomyces cerevisiae (yeast)
Cell culture chambers: 32

Ground-Based Controls

Delayed synchronous

Key Flight Hardware

Biorack US2 Experiment Hardware

Objectives/Hypothesis

The principal objectives of the flight experiment were to determine the effects of the space flight environment on cell yield, survival, and ability to undergo meiosis and to monitor mitotic chromosome segregation and recombination in the space flight environment. Two types of yeast cultures were flown: mitotic cell cultures in which yeast cell populations are established by budding and mitosis, and meiotic cell cultures in which yeast cells undergo meiosis and acospore formation. The mitotic cell cultures are microbial analogs of human somatic mitotic cell division, while the meiotic cell cultures are microbial analogs of human meiosis and gamete formation.

Approach or Methods

Two yeast diploid hybrids were prepared. STS42-1 is a Rec+, Rad+, Spo+ strain capable of mitosis or meiosis at both 22 °C or 36 °C. STS42-2 is a temperature-conditional strain that exhibits Rec+, Rad+, Spo+ at 22 °C, but Rec-, Rad-, and Spo- at 36 °C and grows mitotically at either temperature. Two cultures of each strain were incubated inflight under four conditions: in microgravity at 22 °C and 36 °C, and in a 1 G centrifuge at 22 °C and 36 °C. The ground cultures were incubated under similar conditions: static at 22 °C and 36 °C, in a 1 G centrifuge at 22 °C and 36 °C.

Results

There was no marked enhancement or reduction in total cell yield due to microgravity conditions. The incubation temperature appears to be the principle factor in the total cell yield: cell densities of cultures incubated at 22 °C were greater by a factor of 2 or less than the densities of those incubated at 36 °C. The average survival of the STS42-1 flight culture cells ranged from 51% to 75%, with the 22° cultures being the highest. The average survival rate of the STS42-2 flight cell cultures ranged from 24% to 72% with the 22 °C cultures being the highest. The most striking discovery was the higher-than-expected recovery of Rec- intergenic mitotic recombinants from the 36 °C flight cultures. Rec- is recombinate deficient at 36 °C in ground controls. STS42-2 also preserved its Rec- phenotype during flight at 36 °C with respect to resistant segregants due to gene conversion, events that result in mitotic segregants and failure to initiate meiosis. One hypothesis for this behavior is a difference in the nature of the lesion that initiates mitotic recombination in flight as opposed to ground.

Title of Study
Gravitropic Threshold (GTHRES)

Science Discipline
Plant biology

Investigator	Institute
Allan H. Brown	University of Pennsylvania

Co-Investigator(s)	Institute
Chapman, David K.	University of Pennsylvania
Heathcote, David G.	University of Pennsylvania
Johnsson, Anders	University of Trondheim

Research Subject(s)
Avena sativa L. (oat)
Flight seeds: 396

Ground-Based Controls
Synchronous, Clinostat

Key Flight Hardware
Gravitational Plant Physiology Facility, Middeck Ambient Stowage Insert, Plant Carry-On Container

Objectives/Hypothesis
The widespread occurrence of statocytes with sedimenting statoliths in higher plants is compelling evidence that they are involved in some way with the process of detection of the G-force vector direction. Whether the same process serves to detect the intensity of that force is not well established. Determination of the smallest stimulus capable of eliciting a response, referred to as threshold, is an important experimental objective. Other objectives are to determine the maximum response to laterally directed G-acceleration between 0 and 1 G, to determine the sensitivity of the plants' response parameter and to determine whether the plants' response is proportional to the intensity of the stimulation.

Approach or Methods
Seedlings were raised in darkness. Prior to testing, the seedlings were in space under centrifugation at 1 G. Tropistic stimulations were produced by laterally directed centripetal accelerations on variable speed centrifuges, which were programmed to apply stimulus doses. Stimulus doses were defined as G x t(time) in which G and t were independent variables. In different tests, centripetal accelerations were varied between 0.1 and 1 G and t was varied from 2 to 130 minutes. Stimulus doses were varied from 1.8 to 25.2(G)(min). Temperatures were controlled and recorded continuously. The nominal temperature was 22.5 °C. Tropistic response was measured before and after stimulation with time lapse images using infrared light.

Results
Characteristic qualitative features of the *Avena* coleoptile's tropistic response pattern in weightlessness were not greatly different from ground-based studies. For flight data, logarithmic plots extrapolated to positive threshold values in the range 0.9 to 7.8 minutes. The shortest stimulation time to cause a response at 1 G was 2 minutes, and by extrapolation, the threshold was less than 1 minute. The lowest G-value used to stimulate coleoptiles on flight was 0.1 G. In that experiment, a significant response of 19.6 ± 2.2 °C was observed, which demonstrated that if there is an absolute G-threshold for gravitropic response, it must be below 0.1 G. Qualitatively autotrophic counterreactions after initial tropistic bending were evident from visual inspection of the time series of response images. As a general trend, autotropic responses were more prominent the greater the stimulus and the tropistic response.

Title of Study

Response to Light Stimulus Phototropic Transients (FOTRAN)

Science Discipline

Plant biology

Investigator	Institute
David G. Heathcote	University City Science Center, Philadelphia

Co-Investigator(s)	Institute
Brown, Allan H.	University of Pennsylvania
Chapman, David K.	University of Pennsylvania

Research Subject(s)

Triticum aestivum (wheat) seedlings
Flight seedlings: 144

Ground-Based Controls

Clinostat, preflight and postflight asynchronous control using flight hardware

Key Flight Hardware

Gravitational Plant Physiology Facility, Middeck Ambient Stowage Insert, Plant Carry-On Container

Objectives/Hypothesis

The objective of the FOTRAN experiment was to determine the time course of plant seedling curvature induced by phototropic stimulations in a microgravity environment. The experiment was designed to provide data on discrete physiological responses of growing wheat coleoptiles and the effect of microgravity in modifying these responses. The purpose of this experiment was fourfold: 1) To determine whether seedling curvature proceeds in the same direction and rate in microgravity as on earth; 2) To determine whether the degree of extent of seed curvature is the same in microgravity as on Earth; 3) To see if seedling curvature reverses (autotropism) or oscillates (circumnutation) in microgravity; and 4) To determine the phototrophic dose-response relationship in plants in microgravity.

Approach or Methods

In orbit, plants were held in a 1-G-simulated environment to allow for normal plant development until the start of the experiment. Plants were then moved to the recording and stimulus chamber (REST) where they were held at microgravity and time-lapse videos were taken for 5 hours before photostimulus occurred. Plants were then exposed to various lengths of photostimulation, ranging from 3 seconds to 33 minutes 18 seconds. After completion of photostimulus, time-lapse video records were taken until the end of the experiment, approximately 7 hours. This process was repeated for subsequent batches of seedlings. Some batches were fixed inflight at the end of the experiment. Batches that were not fixed inflight were examined, photographed, measured, weighed, and fixed postflight. Any non-germinating seeds were cultured.

Results

The curvature response to photostimulus in flight was not significantly different than the ground controls except in groups that received 6- and 9-second stimuli. Measurements of seedling curvature show a relationship between stimulus and curvature response. The dose response curve of wheat seedling phototropism shows that for the majority of stimulus durations the mean response in 0 G was not statistically different than the ground controls. Autotropic reversal of curvature and circumnutation was seen in flight data. Circumnutation was seen in half of the flight seedlings. Rhythmicities were also observed in groups that were not photostimulated.

Title of Study

Genetic and Molecular Dosimetry of HZE Radiation (RADIAT)

Science Discipline

Radiation biology

Investigator

Gregory A. Nelson	NASA Jet Propulsion Laboratory

Co-Investigator(s)	Institute
Schubert, Wayne W.	NASA Jet Propulsion Laboratory
Hartman, Philip S.	Texas Christian University

Research Subject(s)

Caenorhabditis elegans (nematode larvae)

Flight: ~ 7 million	Male/Hermaphrodite

Ground-Based Controls

Delayed synchronous

Key Flight Hardware

Biorack US1 Experiment Hardware

Objectives/Hypothesis

One of the major features of the space environment is the presence of cosmic rays or HZE (high energy and charge) particles. Understanding the biological effects of the complex radiation environment in space is crucial to the safety of space flight crews. Of greatest importance are changes to chromosomes that lead to the conversion of normal cells to cancer cells. The objective of this study was to isolate genetic changes in animal cells caused by cosmic rays in space so that their likelihood of occurrence and structural features could be evaluated.

Approach or Methods

Two strategies were used for the selection of mutations induced by space radiation. The first method used a large genetic target of 1500 genes and the second used a single large gene, *unc-22*, as a target. Four tests (growth, mating, segregation, and recombination) were carried out to assess development and the behavior of chromosomes during meiosis. Each test was performed with two different genotypes to control for specific gene effects. Worms from selected cultures were fixed and stained using the fluorescent DNA- binding dye DAPI to reveal cell nuclei. Some embryos recovered at landing were also fixed and stained with antibodies specific for cytoplasmic determinants that localize to different cell lineages. Several hundred animals were analyzed for their anatomy based on cell number and distribution, nuclear morphology, karyotype, and symmetry relationship.

Results

No obvious differences were seen in the development, behavior, and chromosome mechanics of *C. elegans* as a function of microgravity. Both self-fertilization and mating of males with hermaphrodites were successful. Gross anatomy, symmetry, and gametogenesis were normal based on light microscope observations. No defective karyotypes or cell distributions were observed. The pairing, disjoining, and recombination of chromosomes showed no differences correlated with gravity levels. A variety of mutants were isolated in the *unc-22* gene and in essential genes balanced by the *eT1* translocation. Phenotypic assessment of mutants suggests that mutants isolated from regions of identified high linear energy transfer (LET) particles are more severe than those isolated by random screening. Large deletions have been identified amongst the *unc-22* mutants. The rates of mutagenesis were significantly above those in ground controls.

Title of Study

Effects of Microgravity on *Aurelia* Ephyra Behavior and Development

Science Discipline

Developmental Biology

Investigator	Institute
Dorothy B. Spangenberg	Eastern Virginia Medical School

Co-Investigator(s)	Institute
None	

Research Subject(s)

Aurelia aurita (jellyfish)
Flight: 36

Ground-Based Controls

Synchronous

Key Flight Hardware

Ambient Temperature Recorder, Biorack (provided by ESA), Biorack Type I Containers (provided by ESA), Nizemi (provided by DLR), Refrigerator/Incubator Module

Objectives/Hypothesis

Aurelia polyps and ephyrae were exposed to microgravity and 1 G controls (inflight and ground) in order to compare, while in flight, the swimming behavior of ephyrae that developed in microgravity with the controls. Centrifugation of the ephyrae at different G-levels on the Nizemi microscope was used to establish the G-threshold for Earth-type behavior. Numbers of buds per polyp maintained in microgravity for 14 days were compared pre- and postflight with ground controls. The rate of metamorphosis during ephyra development was also determined in space and at 1 G. Immediately postflight, the morphology and the swimming/pulsing behavior of the ephyrae that had developed in microgravity were recorded and compared with ground controls.

Approach or Methods

Polyps were induced to metamorphose at L-24h preflight with iodine at 22 °C. These polyps as well as ephyrae were maintained in the Biorack when they were not being exposed to graded levels of gravity on the Nizemi. These organisms and metamorphosing jellyfish were videotaped at different intervals throughout the mission, as were ground controls. Postflight, ephyrae were videotaped, photographed, and examined microscopically in order to record swimming activity and to count the number of pulses, arms, and statoliths per animal.

Results

Ephyrae that developed in microgravity had significantly more abnormal arm numbers as compared with 1 G controls in space and on Earth. Their mean numbers of statoliths, rhopalia, and pulses per minute as determined postflight did not differ significantly from controls nor did their types of pulsing abnormalities. Significantly fewer ephyrae that developed in space swam when tested postflight than did the controls. Polyps budding in space produced more buds and were developmentally ahead of ground controls. The G-threshold studies of ephyrae sent into space from Earth revealed that more than 50% of the ephyrae convert to Earth-like swimming behavior upon exposure to 0.3 G. Although development through budding and through metamorphosis proceeds well in space, some jellyfish are apparently more sensitive to the microgravity environment than others, as evidenced by their abnormal arm development.

Title of Study

Early Development of a Gravity-Receptor Organ in Microgravity

Science Discipline

Neurophysiology

Investigator	Institute
Michael L. Wiederhold	University of Texas

Co-Investigator(s)	Institute
None	

Research Subject(s)

Cynops pyrrhogaster (newt)
Flight: 4 adults, 144 fertilized eggs · Female/Male

Ground-Based Controls

Vivarium fertilized eggs: 144

Key Flight Hardware

Aquatic Animal Experiment Unit (provided by NASDA)

Objectives/Hypothesis

This experiment aimed to determine the effects, if any, of a microgravity environment on the initial development of the gravity-sensing portions of the inner ear. These organs contain sensory hair cells covered by a layer of dense calcium carbonate stones called otoconia. Particular emphasis was placed on the formation of otoliths, the masses on which gravitational and linear-acceleration forces act. If the growth of the otoliths is somehow regulated by their weight, their mass should be increased in reduced gravity. Furthermore, the otoconia are important for the proper functioning of many gravitactic reflexes in vertebrates and invertebrates. These reflexive circuits are established early in development and might be effected by exposure to microgravity.

Approach or Methods

Pre-fertilized eggs, some at developmental stages before the inner ear had formed and at the point just before the otoliths were formed, were launched in the Aquatic Animal Experiment Unit (AAEU). During flight, animals were video-recorded to observe progress of development. After flight, some larvae were fixed for sectioning. The sections were then analyzed with X-ray microimaging. The otolith volume and areas of sensory epithelia for various stages of development were calculated from three-dimensional reconstructions of the serial sections Other larvae were tested to estimate the gain of the otolith-ocular reflex.

Results

Approximately 62 out of 144 larvae survived the flight. According to morphological analysis of the videotape recording, both flight and ground controls developed at the same rates. Analysis of the three-dimensional reconstruction showed that flight-reared larvae have a larger mean endolymphatic sac (ES) and duct volume and a larger average volume of otoconia within the sac when compared to similarly staged ground controls. Furthermore, the appearance of otoconia in the ES was greatly accelerated in the larvae reared in microgravity. Otoconia from space-flown larvae also appeared more susceptible to degradation, and in a few cases, appeared to contain only longitudinal filaments, indicating alteration in processing in their assembly. These stones do not appear until after a return to normal gravity. More experiments with longer flight times must be performed to understand this phenomenon more clearly.

IML2-3

Title of Study

Gravity and the Stability of the Differentiated State of Plant Embryos

Science Discipline

Plant biology

Investigator	Institute
Abraham D. Krikorian	State University of New York at Stony Brook

Co-Investigator(s)	Institute
None	

Research Subject(s)

Hemerocallis cv. Autumn Blaze
Flight cell culture plates: 6

Ground-Based Controls

48-Hour asynchronous ground control using the Orbiter Environmental Simulator

Key Flight Hardware

Cell Culture Chambers, Thermal Electric Incubator

Objectives/Hypothesis

This experiment was designed to: 1) evaluate whether space flight affected the pattern and developmental progression of embryogenically competent daylily cells from one well-defined stage to another; 2) determine whether mitosis and chromosome behavior were modified by the space environment.

Approach or Methods

This was a slightly expanded (14 day vs 8 day) version of the PCR Experiment conducted on STS-J. Again, daylily (*Hemerocallis* cv. Autumn Blaze) plant cells were used as test systems. The number of dishes was expanded from two to six, and half of them were fixed with 3% glutaraldehyde on orbit (a "first" with a U.S. plant biology test). Cells with the ability to develop into embryos were kept inactive by a pH-related culture medium composition until they were in space and were activated by modification of their nutrient status through changes in their metabolism, which altered the pH of the medium. Both chemically fixed and live somatic embryo cultures were returned to Earth for detailed cytological and postflight grow-out analysis.

Results

Somatic embryogenesis proceeded successfully but at slower rates during space flight. Results similar to those found in the PCR space flight experiment relating to chromosomal aberrations, the increased occurrence of binucleate cells, etc., were confirmed in this flight. The availability of inflight fixation demonstrated that the data from prior postflight fixations for metaphase analyses were valid, and the observed chromosomal aberrations and reduced rates of cell division were not due to re-entry effects. A wide range of contrived and combined insults (or stresses of various sorts) delivered to the developing cells used in these investigations (on Earth) have not yet allowed duplication of the chromosomal perturbations encountered in space.

Title of Study

Ability of Polyethylene Glycol-Interleukin-2 (PEG-IL-2) to Counteract the Effect of Space Flight on the Rat Immune System

Science Discipline

Immunology

Investigator

Robert Zimmerman	Chiron Corporation

Co-Investigator(s)	Institute
Sonnenfeld, Gerald	Carolinas Medical Center
Ballard, Rodney W.	NASA Ames Research Center
Chapes, Stephen K.	Kansas State University
Goldwater, Danielle	NASA Ames Research Center
Luttges, Marvin	BioServe, University of Colorado

Research Subject(s)

Rattus norvegicus (Sprague-Dawley rat)

Flight: 12 Male

Ground-Based Controls

Delayed synchronous: 12, Vivarium: 12

Key Flight Hardware

Ambient Temperature Recorder, Animal Enclosure Module

Objectives/Hypothesis

Because of the suppression of the immune system in otherwise healthy subjects during space flight, it offers a unique opportunity to study the effects of biological substances without the complications of illnesses normally present in immunosuppressed subjects. Polyethylene Glycol-Interleukin-2 (PEG-IL-2) is an immunological mediator and enhancer developed and manufactured by Chiron Corp. The purpose of this experiment, in conjunction with the Immune.2 experiment, was to confirm and define the ability of PEG-IL-2 to prevent or ameliorate the detrimental effects of space flight on immune responses of rats.

Approach or Methods

Half of the animals in each group were injected i.v. with PEG-IL-2 two to three hours before transfer to the Animal Enclosure Modules. Upon recovery, blood samples were collected and analyzed for corticosterone concentration with radioimmunoassay. Macrophage (M-CSF) and granulocyte-macrophage stimulating factor (GM-CSF) dependent macrophage colony formation from bone marrow cells was assayed. Lymphocytes were obtained from the spleen and lymph nodes and assayed to determine cell proliferation rates and the secretion of cytokines, M-CSF, interleukin-6 (IL-6), interferon-γ (IFN-γ), and transforming growth factor beta (TGF-ß). Peritoneal macrophages were assayed for secretion of TNFα and IL-6.

Results

Results of this experiment are joined with the Immune.2 experiment. Few immunological parameters were consistent across the Immune.1 and Immune.2 experiments, making conclusive observations difficult. Inconsistencies between the two experiments prevented any conclusive evidence concerning the effectiveness of the PEG-IL-2 treatment. Some of the animals flown were found to have damage to their tails upon recovery; however, compared to the animals in the same group, these changes did not correlate with any of the parameters measured. While there were the expected trends in the Immune.1 experiments, the control animals did not exhibit as many of the flight-related changes as were anticipated. The control group in the Immune.2 study had more dramatic changes associated with space flight. These differences may have been due to the fact that flight animals in the Immune.2 experiment were exposed to significantly higher ambient temperatures than animals in Immune.1.

IMMUNE2-1

Title of Study

Confirmation of Ability of Polyethylene Glycol-Interleukin-2 (PEG-IL-2) to Counteract the Effect of Space Flight on the Rat Immune System

Science Discipline

Immunology

Investigator	Institute
Robert Zimmerman	Chiron Corporation

Co-Investigator(s)

Sonnenfeld, Gerald	Carolinas Medical Center
Chapes, Stephen K.	BioServe, Kansas State University
Goldwater, Danielle	NASA Ames Research Center
Simske, Steven	BioServe, University of Colorado, Boulder
Miller, Edwin	Harrington Cancer Center

Research Subject(s)

Rattus norvegicus (Sprague-Dawley rat)
Flight: 12 Male

Ground-Based Controls

Delayed synchronous: 18, Vivarium: 12

Key Flight Hardware

Ambient Temperature Recorder, Animal Enclosure Module

Objectives/Hypothesis

Because of the suppression of the immune system in otherwise healthy subjects during space flight, it offers a unique opportunity to study the effects of biological substances without the complications of illnesses normally present in immunosuppressed subjects. Polyethylene Glycol-Interleukin-2 (PEG-IL-2) is an immunological mediator and enhancer developed and manufactured by Chiron Corp. The purpose of this experiment in conjunction with an Immune.1 experiment was to confirm and define the ability of PEG-IL-2 to prevent or ameliorate the detrimental effects of space flight on immune responses of rats.

Approach or Methods

Half of the animals in each group were injected i.v. with PEG-IL-2 two to three hours before transfer to the Animal Enclosure Modules. Upon recovery, blood samples were collected and analyzed for corticosterone concentration with radioimmunoassay. Macrophage stimulating factor (M-CSF) and granulocyte-macrophage stimulating factor (GM-CSF) dependent macrophage colony formation from bone marrow cells was assayed. Lymphocytes were obtained from the spleen and lymph nodes and assayed to determine cell proliferation rates and the secretion of cytokines, M-CSF, interleukin-6 (IL-6), interferon-γ (IFN-γ), and transforming growth factor beta (TGF-ß). Peritoneal macrophages were assayed for secretion of TNFα and IL-6.

Results

The results of this experiment are joined with the Immune.1 experiment. Few immunological parameters were consistent across the Immune.1 and Immune.2 experiments, making conclusive observations difficult. Significant changes in bone parameters were observed in Immune.2 but not Immune.1. The inconsistencies between the two experiments prevented any conclusive evidence concerning the effectiveness of the PEG-IL-2 treatment. Several factors may have played a role in these discrepancies. Some of the animals flown as a part of the Immune.1 experiment were discovered to have various degrees of damage to their tails (necrosis, loss, and gangrenous tissues). Additionally, flight animals in the Immune.2 experiment were exposed to significantly higher ambient temperatures than animals in Immune.1. These data illustrate some of the issues that can arise when small numbers of animals are studied under flight conditions that are difficult to reproduce from one flight to the next.

Title of Study

Expression of Contractile Protein Isoforms in Microgravity

Science Discipline

Developmental biology

Investigator	Institute
Page A.W. Anderson	Duke University Medical Center

Co-Investigator(s)	Institute
None	

Research Subject(s)

Coturnix coturnix (Japanese quail) eggs

Flight: 32 Male/Female

Ground-Based Controls

Asynchronous: 64

Key Flight Hardware

Glovebag/Filter-Pump/Fixative Kits, Incubator (provided by IMBP)

Objectives/Hypothesis

The objective of this experiment was to determine the effects of microgravity on developmentally programmed expression of Troponin T and I isoforms known to regulate cardiac and skeletal muscle contraction.

Approach or Methods

This experiment was performed twice: once during Mir 18 (returning on STS-71) and once during Mir 19 (returning on STS-74). Fertilized eggs were carried to the Mir space station aboard a Russian Progress supply vessel, and placed in an incubator supplied by the Institute of Biomedical Problems. On days 7, 10, 14, and 17 (day 16 during Mir 19), eight eggs were fixed and stored for return to Earth.

Results

During both runs of the experiment, internal incubator temperature was higher than nominal throughout the experiment, and most of the quail embryos failed to develop as expected, resulting in low science return. During Mir 18, only one embryo developed to an appropriate age, and preliminary assessment indicated that most embryos did not survive past 4–5 days of incubation. During Mir 19, 10 embryos developed past 7 days and four embryos developed to an appropriate age. Analysis of the effects of microgravity on isoform expression are still under way.

Incubator1-2 & 2-2

Title of Study

Effect of Microgravity on Quail Eye Development

Science Discipline

Developmental biology

Investigator	Institute
Gary W. Conrad	Kansas State University

Co-Investigator(s)	Institute
None	

Research Subject(s)

Coturnix coturnix (Japanese quail) eggs

Flight: 32 Male/Female

Ground-Based Controls

Asynchronous: 64

Key Flight Hardware

Glovebag/Filter-Pump/Fixative Kits, Incubator (provided by IMBP)

Objectives/Hypothesis

The objective of this experiment was to determine if microgravity affects the ultrastructural development of the cornea in quail.

Approach or Methods

This experiment was performed twice: once during Mir 18 (returning on STS-71) and once during Mir 19 (returning on STS-74). Fertilized eggs were carried to the Mir space station aboard a Russian Progress supply vessel, and placed in an incubator supplied by the Institute of Biomedical Problems. On days 7, 10, 14, and 17 (day 16 during Mir 19), eight eggs were fixed and stored for return to Earth.

Results

During both runs of the experiment, internal incubator temperature was higher than nominal throughout the experiment, and most of the quail embryos failed to develop as expected, resulting in low science return. During Mir 18, only one embryo developed to an appropriate age, and preliminary assessment indicated that most embryos did not survive past 4–5 days of incubation. During Mir 19, 10 embryos developed past 7 days and four embryos developed to an appropriate age. No viable results were obtained.

Title of Study

Skeletal Development in Long-Duration Space Flight

Science Discipline

Developmental biology

Investigator	Institute
Stephen B. Doty	Hospital for Special Surgery

Co-Investigator(s)	Institute
None	

Research Subject(s)

Coturnix coturnix (Japanese quail) eggs

Flight: 32 Male/Female

Ground-Based Controls

Asynchronous: 64

Key Flight Hardware

Glovebag/Filter-Pump/Fixative Kits, Incubator (provided by IMBP)

Objectives/Hypothesis

The objective of this experiment was to study embryogenesis and cellular differentiation of endochondral and intramembranous bone formation, as affected by long-term space flight.

Approach or Methods

This experiment was performed twice: once during Mir 18 (returning on STS-71) and once during Mir 19 (returning on STS-74). Fertilized eggs were carried to the Mir space station aboard a Russian Progress supply vessel and placed in an incubator supplied by the Institute of Biomedical Problems. On days 7, 10, 14, and 17 (day 16 during Mir 19), eight eggs were fixed and stored for return to Earth.

Results

During both runs of the experiment, internal incubator temperature was higher than nominal throughout the experiment, and most of the quail embryos failed to develop as expected, resulting in low science return. During Mir 18, only one embryo developed to an appropriate age, and preliminary assessment indicated that most embryos did not survive past 4–5 days of incubation. During Mir 19, 10 embryos developed past 7 days and four embryos developed to an appropriate age. No viable results were obtained.

Incubator1-4 & 2-4

Title of Study

Effect of Microgravity on Afferent Innervation

Science Discipline

Developmental biology

Investigator	Institute
Cesar D. Fermin	Tulane University School of Medicine

Co-Investigator(s)	Institute
None	

Research Subject(s)

Coturnix coturnix (Japanese quail)eggs

Flight: 32 Male/Female

Ground-Based Controls

Asynchronous: 64

Key Flight Hardware

Glovebag/Filter-Pump/Fixative Kits, Incubator (provided by IMBP)

Objectives/Hypothesis

The objectives of this experiment were to determine the effects of microgravity on connectivity of afferent neurons and inner ear hair cells and vestibular nuclei neurons, and characterize changes in innervation patterns of inner ear afferent and efferent neurons.

Approach or Methods

This experiment was performed twice: once during Mir 18 (returning on STS-71) and once during Mir 19 (returning on STS-74). Fertilized eggs were carried to the Mir space station aboard a Russian Progress supply vessel and placed in an incubator supplied by the Institute for Biomedical Problems. On days 7, 10, 14, and 17 (day 16 during Mir 19), eight eggs were fixed and stored for return to Earth. The branching pattern and morphology of the afferent terminals in one ear was analyzed under light and electron microscopy. The brainstem and opposite ear were sectioned and analyzed immunohistochemically for neurofilament (NF) content, the S100ß protein, and synthesizing and degrading enzymes for the neurotransmitters gamma-amino-butyric acid (GABA), and acetylcholine (ACh). The branching patterns of afferents inside the epithelia will be observed with NF staining. Changes in GABA and ACh staining will suggest changes in the afferent and efferent system, respectively. The utricle-lateral canal ampulla (ULC) was dissected and observed with electron microscopy in order to evaluate synaptic density.

Results

During both runs of the experiment, internal incubator temperature was higher than nominal throughout the experiment, and most of the quail embryos failed to develop as expected, resulting in low science return. During Mir 18, only one embryo developed to an appropriate age, and preliminary assessment indicated that most embryos did not survive past 4–5 days of incubation. During Mir 19, 10 embryos developed past 7 days and four embryos developed to an appropriate age. After sharing viable specimens with other researchers, this experiment received only three partially-intact flight specimens, preventing statistically significant analysis. However, analysis of ground control embryos was conducted, providing normative data for future flight experiments.

Incubator1-5 & 2-5

Title of Study

Effects of Weightlessness on Vestibular Development in Quail

Science Discipline

Developmental biology

Investigator	Institute
Bernd Fritzsch	Creighton University

Co-Investigator(s)	Institute
Bruce, Laura	Creighton University

Research Subject(s)

Coturnix coturnix (Japanese quail) eggs

Flight: 5.5 Male/Female

Ground-Based Controls

Asynchronous: 64

Key Flight Hardware

Glovebag/Filter-Pump/Fixative Kits, Incubator (provided by IMBP)

Objectives/Hypothesis

The objective of this experiment was to determine effects of microgravity on the development of connections between the gravistatic receptors and the brainstem in quail raised in microgravity. The long range importance of this research is to find out whether or not there is a critical phase during development of the vestibular system in which appropriate stimuli are needed to fine tune synaptogenesis. These data will be crucial for future long range space explorations that require multi-generation flights.

Approach or Methods

This experiment was performed twice: once during Mir 18 (returning on STS-71) and once during Mir 19 (returning on STS-74). Fertilized eggs were carried to the Mir space station aboard a Russian Progress supply vessel and placed in an incubator supplied by the Institute of Biomedical Problems. On days 7, 10, 14, and 17 (day 16 during Mir 19), eight eggs were fixed and stored for return to Earth.

Results

During both runs of the experiment, internal incubator temperature was higher than nominal throughout the experiment, and most of the quail embryos failed to develop as expected, resulting in low science return. During Mir 18, only one embryo developed to an appropriate age, and preliminary assessment indicated that most embryos did not survive past 4–5 days of incubation. During Mir 19, 10 embryos developed past 7 days and four embryos developed to an appropriate age. No viable results were obtained.

Incubator1-6 & 2-6

Title of Study
Hypogravity's Effect on the Life Cycle of Japanese Quail

Science Discipline
Developmental biology

Investigator	Institute
Patricia Y. Hester	Purdue University

Co-Investigator(s)	Institute
None	

Research Subject(s)
Coturnix coturnix (Japanese quail) eggs
Flight: 32 Male/Female

Ground-Based Controls
Asynchronous: 64

Key Flight Hardware
Glovebag/Filter-Pump/Fixative Kits, Incubator (provided by IMBP)

Objectives/Hypothesis
The objective of this experiment was to determine if quail embryos exposed to microgravity use minerals from the egg shell in the same manner as embryos on Earth.

Approach or Methods
This experiment was performed twice: once during Mir 18 (returning on STS-71) and once during Mir 19 (returning on STS-74). Fertilized eggs were carried to the Mir space station aboard a Russian Progress supply vessel and placed in an incubator supplied by the Institute of Biomedical Problems. On days 7, 10, 14, and 17 (day 16 during Mir 19), eight eggs were fixed and stored for return to Earth.

Results
During both runs of the experiment, internal incubator temperature was higher than nominal throughout the experiment, and most of the quail embryos failed to develop as expected, resulting in low science return. During Mir 18, only one embryo developed to an appropriate age, and preliminary assessment indicated that most embryos did not survive past 4–5 days of incubation. During Mir 19, 10 embryos developed past 7 days and four embryos developed to an appropriate age. No viable results were obtained.

Incubator1-7 & 2-7

Title of Study

Avian Blood Vessel Formation in Space

Science Discipline

Developmental biology

Investigator	Institute
Peter I. Lelkes	University of Wisconsin Medical School

Co-Investigator(s)	Institute
None	

Research Subject(s)

Coturnix coturnix (Japanese quail) eggs

Flight: 32 Male/Female

Ground-Based Controls

Asynchronous: 48, Vivarium: 48

Key Flight Hardware

Glovebag/Filter-Pump/Fixative Kits, Incubator (provided by IMBP)

Objectives/Hypothesis

The objective of this experiment was to determine whether prolonged space flight causes a change in the pattern of vascularization during the development and maturation of the chorioallantoic membrane (CAM).

Approach or Methods

This experiment was performed twice: once during Mir 18 (returning on STS-71) and once during Mir 19 (returning on STS-74). Fertilized eggs were carried to the Mir space station aboard a Russian Progress supply vessel and placed in an incubator supplied by the Institute of Biomedical Problems. On days 7, 10, 14, and 17 (day 16 during Mir 19), eight eggs were fixed and stored for return to Earth. Postflight, vivarium, asynchronous, and flight eggshells were opened longitudinally, and the CAM was carefully removed. The CAM was then analyzed under autoflourescent bright light microscopy to evaluate arterial blood vessel density and diameter.

Results

During both runs of the experiment, internal incubator temperature was higher than nominal throughout the experiment, and most of the quail embryos failed to develop as expected, resulting in low science return. During Mir 18, only one embryo developed to an appropriate age, and preliminary assessment indicated that most embryos did not survive past 4–5 days of incubation. During Mir 19, 10 embryos developed past 7 days and four embryos developed to an appropriate age. Statistically significant analysis of flight animals was impossible. However, comparative analysis between vivarium control and simulated ground-based groups were viable. Blood vessel density was significantly lower in simulated subjects when compared to the vivarium subjects. Only small vessel density was affected, suggesting that the forces imposed on the simulated group affected normal angiogenesis.

Incubator1-8 & 2-8

Title of Study

Effects of Weightlessness on Avian Visuo-Vestibular System: Immunohistochemical Analysis

Science Discipline

Developmental biology

Investigator	Institute
Toru Shimizu	University of South Florida

Co-Investigator(s)	Institute
None	

Research Subject(s)

Coturnix coturnix (Japanese quail) eggs

Flight: 32 Male/Female

Ground-Based Controls

Asynchronous: 64

Key Flight Hardware

Glovebag/Filter-Pump/Fixative Kits, Incubator (provided by IMBP)

Objectives/Hypothesis

The objective of this experiment was to investigate the fundamental effects of gravity deprivation on the visuo-vestibular system in birds by measuring distribution of neurochemicals in quail raised in microgravity.

Approach or Methods

This experiment was performed twice: once during Mir 18 (returning on STS-71) and once during Mir 19 (returning on STS-74). Fertilized eggs were carried to the Mir space station aboard a Russian Progress supply vessel and placed in an incubator supplied by the Institute of Biomedical Problems. On days 7, 10, 14, and 17 (day 16 during Mir 19), eight eggs were fixed and stored for return to Earth.

Results

During both runs of the experiment, internal incubator temperature was higher than nominal throughout the experiment, and most of the quail embryos failed to develop as expected, resulting in low science return. During Mir 18, only one embryo developed to an appropriate age, and preliminary assessment indicated that most embryos did not survive past 4–5 days of incubation. During Mir 19, 10 embryos developed past 7 days and four embryos developed to an appropriate age. No viable results were obtained.

Incubator1-9 & 2-9

Title of Study

Fecundity of Quail in Spacelab Microgravity

Science Discipline

Developmental biology

Investigator	Institute
Bernard C. Wentworth	University of Wisconsin, Madison

Co-Investigator(s)	Institute
Wentworth, Alice L.	University of Wisconsin, Madison

Research Subject(s)

Coturnix coturnix (Japanese quail) eggs

Flight: 32 Male/Female

Ground-Based Controls

Asynchronous: 64

Key Flight Hardware

Glovebag/Filter-Pump/Fixative Kits, Incubator (provided by IMBP)

Objectives/Hypothesis

The objective of this experiment was to assess the effects of microgravity on arrangement, normal development, and primordial germ cell (PGC) migration in the gonads of Japanese quail embryos, and to determine the effects of microgravity on normal respiratory function.

Approach or Methods

This experiment was performed twice: once during Mir 18 (returning on STS-71) and once during Mir 19 (returning on STS-74). Fertilized eggs were carried to the Mir space station aboard a Russian Progress supply vessel and placed in an incubator supplied by the Institute of Biomedical Problems. On days 7, 10, 14, and 17 (day 16 during Mir 19), eight eggs were fixed and stored for return to Earth.

Results

During both runs of the experiment, internal incubator temperature was higher than nominal throughout the experiment, and most of the quail embryos failed to develop as expected, resulting in low science return. During Mir 18, only one embryo developed to an appropriate age, and preliminary assessment indicated that most embryos did not survive past 4–5 days of incubation. During Mir 19, 10 embryos developed past 7 days and four embryos developed to an appropriate age. No viable results were obtained.

NIH.C1-1

Title of Study

The Effects of Hypogravity on Osteoblast Differentiation

Science Discipline

Bone and calcium physiology

Investigator

Ruth Globus — NASA Ames Research Center

Co-Investigator(s) — Institute

Doty, Stephen — Hospital for Special Surgery

Research Subject(s)

Rattus norvegicus (rat) cultured cells
Flight cartridges: 4

Ground-Based Controls

Synchronous

Key Flight Hardware

Space Tissue Loss-A Module

Objectives/Hypothesis

Weightbearing is essential for normal skeletal function. Without weightbearing, the rate of bone formation by osteoblasts decreases in the growing rat. The fundamental question of whether the defects in osteoblast function due to weightlessness are mediated by localized skeletal unloading, or by systemic physiologic adaptation such as fluid shifts, has not been answered. This study proposes to examine whether exposure of cultured rat osteoblasts to space flight inhibits cellular differentiation and impairs mineralization when isolated from the influence of both systemic factors and other skeletal cells.

Approach or Methods

Osteoblasts were purified by collagenase digestion, plated on microcarrier beads in petri dishes, then loaded after 5 days into polypropylene fiber cartridges. Cells were maintained for 2 days on continuous flow CellCo Units, then transferred to the STL hardware and maintained on the unit for 4 days prior to launch. The flight duration was 11 days. Within 4 hours after landing, flight cartridges were recovered. Differentiation was assessed by histological analysis with light and electron microscopy and by the measurement steady-state expression of mRNA genes (alkaline phosphatase, osteopontin, and osteocalcin) that mark progressive osteoblast differentiation. In order to measure metabolism of the cultures, glucose and lactate concentrations were measured 8 hours before the flight, during the time the cartridges were in the STL-A module, and after the cartridges were recovered.

Results

Analysis under light microscopy revealed that the flight cultures had fewer cells per section but were otherwise indistinguishable from the control cultures. In addition, ultrastructural analysis by electron microscopy showed that osteoblasts exposed to space flight possessed less well-organized rough endoplasmic reticulum/Golgi apparatus than ground controls. These results indicate that osteoblasts exposed to microgravity are less differentiated than control cells. After the omission of a suspected defective sample from the statistical pool, glucose utilization and lactate production was significantly lower for flight cultures. These results indicate that space flight may inhibit energy metabolism and the protein-synthetic activity of osteoblasts.

Title of Study

Influence of Space Flight on Bone Cell Cultures

Science Discipline

Bone and calcium physiology

Investigator

William J. Landis	Harvard Medical School and Children's Hospital

Co-Investigator(s)	Institute
Gerstenfeld, Louis C.	Harvard Medical School and Children's Hospital
Toma, Cyril D.	University of Vienna Medical School

Research Subject(s)

Gallus gallus (chicken) cultured cells
Flight cartridges: 8 (2 different cultures)

Ground-Based Controls

Basal cartridges: 4 (terminated at launch), Synchronous cartridges: 8

Key Flight Hardware

Space Tissue Loss-A Module

Objectives/Hypothesis

The purpose of this experiment was to determine whether osteoblast cells would respond to the shift from normal gravity to microgravity. Specific attention was given to the effects of microgravity on the metabolic state of the cells, their molecular biological nature, biochemical characteristics, and structural features. The hypothesis tested is that the vertebrate skeletal system undergoes adaptive changes in response to microgravity, and such changes will be apparent in measurements of cellular (RNA, proteins, and cytoskeletal elements) and extracellular constituents (collagen, mineral). Observations of these responses may provide insight as to how bones and the skeleton in general respond to microgravity.

Approach or Methods

Cells from 14-or 17-day-old embryonic chick calvariae were grown in DME + 10% FBS; aliquots (~7x106) were mixed with 125 mg Cytodex microcarriers and inoculated in hollow fiber cartridges of artificial capillary culture units (Cellco, Inc.). Cartridge media were supplemented with 12.5 mg/ml ascorbate and 10 mM b-glycerophosphate before and during flight. Four cartridges containing cells committed to the osteoblast lineage (5 days of ascorbate prior to launch) and four with uncommitted cells (10 days ascorbate) were flown; the same number of cartridges with the same kinds of cells were used as ground controls. Basal cartridges containing either committed or uncommitted cells were terminated at launch.

Results

A possible overall 1/3 to 1/2 reduction in total RNA was observed in flight compared to synchronous-control cell groups. Decreased gene expression inflight compared to controls was observed for collagen and osteocalcin. Glucose and lactate measures were statistically similar among these cell groups. Electron microscopy showed matrix development for both committed and uncommitted cell flight groups but less than that of respective controls. Uncommitted cell groups produced greater matrix than committed cells, and all these groups contained secreted collagen fibrils. In summary, the cells continued to be metabolically active, but they elaborated a less extensive extracellular matrix during space flight. The results suggest that microgravity exerts demonstrable effects on bone cells.

NIH.C1-3

Title of Study
Molecular and Cellular Analysis of Space-Flown Myoblasts

Science Discipline
Muscle physiology

Investigator	Institute
David A. Kulesh	Armed Forces Institute of Pathology

Co-Investigator(s)	Institute
None	

Research Subject(s)
Rattus norvegicus (rat) L8 cell line
Flight cartridges: 6

Ground-Based Controls
Synchronous cultures: 6

Key Flight Hardware
Space Tissue Loss-A Module

Objectives/Hypothesis
Myoblast cells have been widely employed in conventional studies of biological processes because characteristics of intact muscle can be readily observed in these cultured cells. The purpose of this experiment was to investigate the effects of space flight on muscle by utilizing a well-characterized myoblast cell line cultured in the Space Tissue Loss flight module. More specifically, this study aims to: 1) determine the role of microgravity in regulating the proliferation and differentiation of various skeletal muscle myoblast cell lines; 2) determine whether pheotypic changes are the direct result of microgravity-modulated gene expression.

Approach or Methods
Cultures of L8 myoblast cells were monitored and prepared for loading into ground control and flight cartridges. During flight, cells were monitored for growth, contamination, and fusing. After landing, some cells were frozen and some plated in dishes for transport to the investigator's lab.

Results
Flight cultures, upon recovery, were found to have a low level fungal contamination. The flight cultures were not viable.

Title of Study

The Effects of Microgravity on *In Vitro* Calcification

Science Discipline

Bone and calcium physiology

Investigator	Institute
Adele L. Boskey	Hospital for Special Surgery

Co-Investigator(s)	Institute
Doty, Stephen B.	Hospital for Special Surgery

Research Subject(s)

Gallus gallus (White leghorn chicken) embryos
Flight cartridges: 12

Ground-Based Controls

Synchronous

Key Flight Hardware

Space Tissue Loss-A (STL-A) Module

Objectives/Hypothesis

Earlier observations of animals flown in microgravity have produced conflicting information about the nature and amount of the mineral formed in bone during flight in microgravity. One cause for these differences was that much of the mineral had been formed on Earth, and there was no way of knowing how much new mineral formed in microgravity. Since crystals formed *in vitro* in microgravity are generally larger and more perfect than those formed under similar conditions on Earth, it was hypothesized that the initial mineral crystals formed under physiologic control in microgravity would also be larger. The purpose of this experiment was to evaluate the initial mineral formed in flight and compare it to mineral formed in ground-based controls. Since biologic mineralization is mediated both by the cells and the extracellular matrix, the second goal was to evaluate the effects of microgravity on the cells and matrix formed in this culture system.

Approach or Methods

Cartilage cells were grown as micromass cultures and flown for 11 days; total time in culture was 16 or 19 days. All cells were fixed in 2% paraformaldehyde plus 0.5% glutaraldehyde in 0.05M cacodylate buffer, pH 7.4 for electron microscopy, histochemistry and immunocytochemistry.

Results

Not yet available.

NIH.C2-2

Title of Study

The Effect of Space Travel on Skeletal Myofibers

Science Discipline

Muscle physiology

Investigator	Institute
Herman H. Vandenburgh	Miriam Hospital/Brown University School of Medicine

Co-Investigator(s)	Institute
None	

Research Subject(s)

Gallus gallus (chicken) skeletal muscle organoids
Flight cartridges: 4

Ground-Based Controls

Synchronous

Key Flight Hardware

Space Tissue Loss-A Module

Objectives/Hypothesis

Previous studies indicate that muscle atrophy in space can result from a wide variety of local and systemic factors. Studies at the molecular level utilizing tissue cultures have shown a wide variety of interactions between muscle tension and exogenous growth factors. However, tissue culture studies have the disadvantage that the skeletal fibers used are neonatal in morphology and isoform expression. Utilizing tissue engineering techniques, bioartificial muscle (BAM) tissues were formed to simulate the adult myofiber. This experiment will attempt to determine whether space flight induces damage and/or atrophy in these engineered myofibers.

Approach or Methods

Bioartificial muscles (BAMs) were engineered from embryonic avian muscle cells. Samples were collected during flight. Postflight, glucose metabolism and lactate production were assayed. Cultures were also analyzed for total noncollagenous protein content and total DNA content. Fibronectin and myosin heavy chain (MHC) content were analyzed with gel electrophoresis. Protein turnover rates were assessed by [^{3}H]phenylalanine incorporation and [^{14}C]phenylalanine release from pre-labeled proteins. Morphometric measurements were also made of the cell cultures. Cells stained with hematoxylin and eosin or through immunolabeling of tropomyosin were used to measure mean myofiber diameter, length, and surface area.

Results

Flight culture and ground cultures had indiscernible differences in total collagenous protein and DNA content. Flight BAMs and control BAMs exhibited similar rates of cellular metabolism that increased linearly throughout the flight. As assessed with [^{14}C]phenylalanine, the rate of total muscle degradation was not significantly different for the two groups. However, protein synthesis rates were decreased (79%) in flight BAMs on day 9. After return to Earth, protein synthesis rates in the flight BAMs rapidly elevated to ground control levels. MHC levels increased 42% in ground control over the course of the experiment while MHC levels in flight BAMs only increased 21%. In contrast, fibronectin levels decreased by similar amounts in both ground and flight cultures over the course of the experiment. Mean myofiber size was significantly (10%) decreased in flight BAMs when compared to ground controls.

Title of Study

The Effects of Hypogravity on Osteoblast Differentiation

Science Discipline

Bone and calcium physiology

Investigator	Institute
Ruth Globus	NASA Ames Research Center

Co-Investigator(s)	Institute
Doty, Stephen	Hospital for Special Surgery

Research Subject(s)

Rattus norvegicus (rat) cultured cells
Flight cartridges: 4

Ground-Based Controls

Synchronous

Key Flight Hardware

Space Tissue Loss-A Module

Objectives/Hypothesis

Weightbearing is essential for normal skeletal function. Without weightbearing, the rate of bone formation by osteoblasts decreases in the growing rat. The fundamental question of whether the defects in osteoblast function due to weightlessness are mediated by localized skeletal unloading or by systemic physiologic adaptation, such as fluid shifts, has not been answered. This study proposes to examine whether exposure of cultured rat osteoblasts to space flight inhibits cellular differentiation and impairs mineralization when isolated from the influence of both systemic factors and other skeletal cells.

Approach or Methods

Stock cultures of osteoblasts were plated onto tissue culture dishes. Cells were plated onto beads, then loaded into cartridges and maintained in CellCo units as in NIH.C1. Recovery of the samples after landing revealed obvious signs of bacterial contamination in two out of four flight cartridges and one out of four ground-control cartridges. Later, rigorous media sterility tests conducted in the principal investigator's laboratory showed that all of the spent media samples collected both before and after transfer of the cartridges into the flight hardware were harboring contamination at the end of the flight period.

Results

Control and flight cultures on NIH.C3 acquired a bacterial contamination in the course of the experiment. Analysis of spent media samples revealed that the cultures acquired contamination at the time of transfer from ground-based CellCo units to the Space Tissue Loss-A hardware. In general, light and electron microscopy did not show any significant differences in cell morphology between flight and ground-control groups and little evidence of collagen accumulation in either flight or ground control cultures. Northern analysis revealed that the cells expressed significant levels of mRNA for osteopontin as well as osteocalcin, which is a later marker of osteoblast differentiation. Thus the cells appeared to differentiate to a limited extent in the course of the experiment despite the contamination. Significant differences were not observed in the amounts of glucose consumed and lactate produced between flight and ground-control samples at the end of the flight period. However, given the problem of contamination, data acquired from this flight are not informative and conclusions about the effects of space flight cannot be drawn.

NIH.C3-2

Title of Study

The Effects of Microgravity on Bone Cell Cultures

Science Discipline

Bone and calcium physiology

Investigator	Institute
William J. Landis	Harvard Medical School and Children's Hospital

Co-Investigator(s)	Institute
Gerstenfeld, Louis C.	Harvard Medical School and Children's Hospital

Research Subject(s)

Gallus gallus (chicken) cultured cells
Flight cartridges: 4 (1 type of culture)

Ground-Based Controls

Basal cartridges: 2 (terminated at launch), Synchronous cartridges: 4

Key Flight Hardware

Space Tissue Loss-A Module

Objectives/Hypothesis

This experiment was a continuation of the studies begun on the NIH.C1 flight, to examine the possible effects of space flight and microgravity on a number of aspects of osteoblast cell growth and gene expression. Parameters to be assessed include glucose and lactate content as a measure of cell metabolism; collagen expression, accumulation, and extracellular matrix assembly; presence of non-collagenous proteins, including osteopontin, bone sialoprotein, osteocalcin, and others; and a definition of spatial and temporal events of mineralization. The studies will examine the hypothesis that unloading bone cells in space flight will result in altered bone matrix production and mineral formation.

Approach or Methods

Cells were obtained from 17-day-old embryonic chick calvaria, grown in Dulbecco's modified Eagle medium supplemented with 10% FBS and ultimately inoculated into hollow fiber cartridges of artificial capillary culture units (Cellco, Inc.). Unlike the protocol for NIH.C1, the cartridges were seeded with cells in the absence of microcarrier beads. After the 8-day flight, cells were removed from the cartridges and analyzed, along with the synchronous controls. Basal cartridge cells, terminated at launch, were identically studied.

Results

Measurements of the metabolic state of the flight, basal, and control cells showed that glucose was consumed completely and to the same measurable extent by all three groups of cells. Differences between metabolism of basal cells and that of either flight or control cells were interpreted as a possible effect induced by the feeding regime in the STL-A unit. Osteopontin, bone sialoprotein, and osteocalcin appeared with reduced immunoreactivity inflight compared to control and basal cells. These results were consistent with the work from NIH.C1 showing down-regulation of collagen and osteocalcin gene expression during space flight. Adaptation of cultured bone cells during space flight is mediated in part by changes in non-collagenous proteins in addition to alterations in collagen.

Title of Study

Molecular and Cellular Analysis of Space-Flown Myoblasts

Science Discipline

Muscle physiology

Investigator	Institute
David A. Kulesh	Armed Forces Institute of Pathology

Co-Investigator(s)	Institute
None	

Research Subject(s)

Rattus norvegicus (rat) L8 cell line
Flight cell cartridges: 8

Ground-Based Controls

Synchronous cell cartridges: 8

Key Flight Hardware

Space Tissue Loss-A Module

Objectives/Hypothesis

Characteristics of intact muscle can be readily observed in cultured myoblasts. The purpose of this experiment was to investigate the effects of space flight on muscle, specifically to: 1) determine the role of microgravity in regulating the proliferation and differentiation of various skeletal muscle myoblast cell lines; 2) determine whether phenotypic changes are the direct result of microgravity-modulated gene expression.

Approach or Methods

Ground and flight media bags were prepared without added growth factors, and once they were determined to be satisfactory (without contamination), additional growth components (L-glutamine, chick embryo extract, and antibiotics) were added. Postflight, cultures were labeled in order to evaluate cell proliferation and differentiation. The cultures were analyzed on days 1, 2, 4, 6, and 8 for sarcomeric myosin, α and ß actin, desmin, vimentin, and titin immunofluorescent antibody staining patterns. The expression of genes related to myogenesis (MyoD, MRF4, myf-5, myogenin, and ID) were analyzed with Northern blotting and hybridization analysis.

Results

Cell nuclei labeling revealed that while microgravity does decreace the ability of myoblast cells to differentiate into myofibrils, it does not seem to affect their natural ability to cease proliferation when cultured to confluency *in vitro*. Both sarcomeric myosin and α-sarcomeric actin are actively expressed after L8 cells fuse to form myotubes. Little of either protein is seen prior to fusion. Space-flown cells, however, fuse to a much lesser extent than do ground-based cultures. ß-actin has an opposite expression schedule. Expression is dramatically reduced within 2 days after confluency, regardless of whether fusion occurs. Therefore, it appears that while space flight significantly decreases the ability of L8 cells to fuse and differentiate into myotubes, the expression and assembly of sarcomeric myosin, α-sarcomeric actin, and ß-actin filaments remain unchanged in control cells and in those few space-flown cells that progress to the fusing stage. More importantly, in those space-flown cells that do not fuse, neither sarcomeric myosin nor a-sarcomeric actin filaments are detected.

NIH.C4-1

Title of Study
Osteoblast Adhesion and Phenotype in Microgravity

Science Discipline
Bone and calcium physiology

Investigator	Institute
Robert J. Majeska	Mount Sinai Medical Center

Co-Investigator(s)	Institute
None	

Research Subject(s)
Rattus norvegicus (rat) ROS cell line
Flight cartridges: 12

Ground-Based Controls
Synchronous

Key Flight Hardware
Space Tissue Loss-A Module

Objectives/Hypothesis
The purpose of this experiment was to investigate: 1) whether microgravity induces changes in osteoblastic cells similar to those caused by bone resorption-stimulating agents like parathyroid hormone (PTH); and 2) whether those phenotypic changes are associated with alterations in cell shape and/or adhesive interactions with the extracellular matrix.

Approach or Methods
A permanent cell line derived from a rat osteosarcoma and stably exhibiting an osteoblast-like phenotype (ROS 17/2.8) was cultured on microcarrier beads and inoculated into 12 STL cartridges. At times ranging from 6 hours to 10 days post-launch, samples of conditioned medium were collected from pairs of cartridges from the flight and ground control groups, and the cartridges were perfused with fixative. Upon recovery after landing, the medium was assayed for lactate (an indicator of metabolic activity and cell viability), alkaline phosphatase (an osteoblast marker enzyme), cyclic AMP (cAMP, produced by osteoblastic cells in response to PTH), and prostaglandin E2 (a locally produced mediator of bone turnover). The cells were examined by phase contrast and fluorescence microscopy to assess shape changes, cytoskeletal organization, and interactions with their substrata.

Results
Media samples from ROS 17/2.8 cells cultured in the STL cartridges contained lactate, alkaline phosphatase, cAMP, and PGE2, indicating the presence of viable cells expressing an osteoblastic phenotype; however, no differences were found in any of these parameters between the flight and ground samples. Microscopic examination of the beads indicated that a loss of cells occurred early after inoculation into cartridges in flight and ground samples alike, followed apparently by slow recovery and growth. No gross differences were found in cell shape between flight and ground samples.

Title of Study

Effect of Space Flight on Transforming Growth Factor-ß (TGF-ß) Expression by hFOB Cells

Science Discipline

Bone and calcium physiology

Investigator	Institute
Russell T. Turner	Mayo Clinic

Co-Investigator(s)	Institute
Harris, Steven A.	Mayo Clinic

Research Subject(s)

Homo sapiens (human) hFOB cell line
Flight cell culture cartridges: 8

Ground-Based Controls

Synchronous cultures: 8

Key Flight Hardware

Space Tissue Loss-A Module

Objectives/Hypothesis

The purpose of this study is to establish whether changes in gravitational loading have a direct effect on osteoblast ability to regulate TGF-ß expression. The effects of space flight and reloading on TGF-ß mRNA and peptide levels will be studied in a newly developed line of immortalized human fetal osteoblasts (hFOB) transfected with an SV40 temperature-dependent mutant to generate proliferating, undifferentiated hFOB cells at 33 to 34 °C and a non-proliferating, differentiated hFOB cells at 37 to 39 °C. Unlike previous cell culture models, hFOB cells have unlimited proliferative capacity yet can be precisely regulated to differentiate into mature cells that express mature osteoblast function.

Approach or Methods

Cell cultures were maintained at 37 °C, the permissive temperature for SV40 large T-antigen in the hFOB cell line. At the appropriate time following recovery of the spacecraft, RNA was isolated from the hFOB cultures and quantitated by UV spectrophotometry for Northern or RNase protection assays. Osteonectin, alkaline phosphatase, and type I collagen were quantified with Northern analysis. Cytokine gene expression was measured by RNase protection assay. The levels of carboxyterminal propeptide of type I procollagen (PICP) were measured by radioimmunoassay in order to evaluate matrix production rates. Prostoglandin E_2 (PGE_2) levels were measured by enzyme immunoassay.

Results

High levels of collagen accumulation were detected in flight and ground cultures from flight day 4 increasing steadily to day 12 and stabilizing after day 12, suggesting a decrease in the rate of collagen synthesis, or increase in collagen breakdown occurred between day 12 and landing. The rates of collagen accumulation in flight and control cells were indistinguishable, consistent with similar rates of collagenous matrix production. No significant difference in PGE_2 levels were detected between flight and ground cultures. The steady state level of osteonectin mRNA decreased dramatically, while alkaline phosphatase and collagen mRNA decreased slightly from baseline. There was a trend toward lower levels of osteonectin ($p < .06$) and collagen ($p < .09$) mRNA in flight cultures. The level of TGF-ß2 (~30%) and TGF-ß1 mRNA (~20) decreased slightly in flight cells compared to ground controls. No qualitative morphological differences were observed between flight and ground controls.

NIH.R1-1

Title of Study

Effects of Gravity on the Attachment of Tendon to Bone

Science Discipline

Bone and calcium physiology

Investigator	Institute
Roger B. Johnson	University of Mississippi

Co-Investigator(s)	Institute
Zardiackas, Lyle D.	University of Mississippi
Tsao, Audrey K.	University of Mississippi
St. John, Kenneth R.	University of Mississippi
Benghuzzi, Hamed A.	University of Mississippi
Tucci, Michelle A.	University of Mississippi

Research Subject(s)

Rattus norvegicus (Sprague-Dawley rat)

Flight: 10 Female

Ground-Based Controls

Basal: 10, Delayed synchronous: 10, Vivarium: 10

Key Flight Hardware

Ambient Temperature Recorder, Animal Enclosure Module

Objectives/Hypothesis

The objective of this experiment was to determine the structural damage to muscle-bone junctions in adult rats after space flight and to examine the potential for reversal of this damage upon return to Earth.

Approach or Methods

In order to perform light microscopy on the left tibia, tissue was demineralized, dehydrated, and embedded in paraffin wax. Sections were cut, mounted, and stained with hematoxylin and eosin. Photographs were taken for computer analysis of: quadriceps femoris, semimembranosus, semitendinosus, gracilis, popliteus, and tibialis anterior muscles. Muscle fiber size was determined for each muscle. Bone histomorphometric parameters were measured using photographs of cross sections of the tibia. The maximal diameter of each tendon was measured from tissue sections of tendon insertions into bone. The right tibia was analyzed by scanning electron microscopy. The origin and insertion of tendons and density of fibers of each muscle were studied. Bone porosity was quantified for each animal. For specific gravity analysis, bones were pulverized, cooled, and fractionated. The samples were then dessicated in ethanol to calculate density fractions.

Results

The data from this experiment showed significant increases in cortical porosity and periosteal resorption in the tibia and fibula of the flight subjects. It was observed that the fibula of the flight animals became thinner. In addition, there was significant endosteal resorption and a decrease in trabecular volume. The damage adjacent to attachments of the soleus and other anti-gravity muscles was the most serious. The findings indicate that space flight causes tibia and fibula atrophy at the site of muscle attachments, and this may lead to fracture when one returns to gravity.

Title of Study

Skeletal Development

Science Discipline

Bone and calcium physiology

Investigator	Institute
Luba Serova	Institute of Biomedical Problems

Co-Investigator(s)	Institute
None	

Research Subject(s)

Rattus norvegicus (Sprague-Dawley rat)
Flight: 10 dams, 10 fetuses Male/Female

Ground-Based Controls

Delayed synchronous: 10 dams, 10 fetuses; Vivarium: 10 dams (laparotomized), 10 dams (nonlaparotomized), 10 fetuses, 10 pups

Key Flight Hardware

Ambient Temperature Recorder, Animal Enclosure Module

Objectives/Hypothesis

Our previous experiments have revealed that an adult organism may well remain functional and a developing fetus may also develop normal functions in a space environment. However, changes were also observed in space-flown fetuses and animals. In this experiment it is assumed that a longer flight and exposure to microgravity may aggravate these changes. The purpose of this experiment is to assess the effect of microgravity on skeletal development in fetuses of rats exposed to microgravity during gestation days 9 through 20.

Approach or Methods

The skeletal development of pups that developed in space was investigated using one fetus from each flight, synchronous, and vivarium laparotomized group. Fetuses were fixed in 100% ethanol, bleached in 0.7% KOH, and stained with alizarine red. Bones were dissected and measured in a binocular lens.

Results

The mean fetal mass in the flight and control fetuses did not differ significantly; however, the mean weight of the vivarium laparotomized fetus was 2.143 g versus 2.469 g of the synchronous control and 2.394 g of the flight fetus ($p < 0.002$). The body weight was in correlation with the ossification areas, which were the lowest in the vivarium controls. The mandible of the 20-day fetuses of the flight group was 7% longer than that of the vivarium controls and 3% longer than in the synchronous group. The size of the forelimb bones (humerus, radius, and ulna) as well as the number of ossification sites in the foot were identical in the flight and synchronous rats, being greater than in the vivarium controls. The scapulae of the flight and synchronous animals were identical and larger than in the vivarium controls. The clavicle of the flight fetuses was 6% longer than that of the synchronous controls. No significant differences were found in the length of the femur, tibia, and fibula bones, or in the number of ossification sites in the foot between the flight and synchronous fetuses.

Title of Study

Microgravity and Placental Development

Science Discipline

Developmental biology

Investigator	Institute
Randall Harrell Renegar	East Carolina University

Co-Investigator(s)	Institute
None	

Research Subject(s)

Rattus norvegicus (Sprague-Dawley rat)

Flight: 10 dams, 10 fetuses Female

Ground-Based Controls

Delayed synchronous, Vivarium

Key Flight Hardware

Ambient Temperature Recorder, Animal Enclosure Module

Objectives/Hypothesis

The role of gravity in proper placental development has not been previously studied and could be necessary to successful mammalian reproduction. The objective of this experiment was to assess the effect of microgravity on placental growth and development of the rat, with the specific aim of: 1) determining the morphology of the placenta and decidua and their organizational relationship immediately upon return from space; and 2) assessing the functional differentiation of trophoblast cells of the labyrinth and trophospongial regions of the placenta by comparing the expression of specific developmentally expressed proteins.

Approach or Methods

Between 3 and 6 hours following recovery, one uterine horn was removed from each of the flight and control group animals. After removing the fetuses from the horns, placenta were weighed and prepared for morphological evaluation and measurement of hormone expression. Expression of two forms of placental lactogen (PL) was measured using complementary DNA (cDNA) probes specific to the hormones.

Results

Morphological studies showed that cross-sectional area of the total placenta, trophospongium and labyrinth, and placental wet weight were not different among flight and control groups. However, percent dry weight for the asynchronous control animals was less ($p < 0.05$) than that for the other groups. Concentration of DNA in the placenta was also less in the asynchronous controls. Placental concentrations of RNA and protein were not different among flight and control groups. Hybridization with the cDNA probes showed that the quantity of PL-I, PL-II and the ratio PL-II:PL-I were not different among the groups. Space flight during gestation days 9–20 does not seem to influence placental growth, development, or function.

Title of Study

Space Flight Effects on Mammalian Development

Science Discipline

Developmental biology

Investigator	Institute
Jeffrey R. Alberts	Indiana University

Co-Investigator(s)	Institute
Ronca April	Indiana University

Research Subject(s)

Rattus norvegicus (Sprague-Dawley rat)
Flight: 10 dams, 10 litters pups Female

Ground-Based Controls

Delayed synchronous: 10 dams, 10 litters pups; Vivarium: 10 dams, 10 litters pups

Key Flight Hardware

Ambient Temperature Recorder, Animal Enclosure Module

Objectives/Hypothesis

The purpose of this study was to observe the inflight activity of pregnant dams in order to obtain quantitative comparisons of the frequency and duration of definable species-typical behavior patterns in microgravity, with special attention to activities that can affect subsequent maternal behavior and fetal development.

Approach or Methods

Upon landing, each dam was videotaped for 1 minute and then transferred to surgery for unilateral hysterectomy (G20/21). Following three rounds of vestibular testing, each fetus was tested for tactile sensitivity. Between recovery day and gestational day 23, remaining flight dams were observed and videotaped to determine any quantitative changes in activity profiles as readaptation to 1 G proceeds. Dams were allowed to deliver naturally. On recovery day 0, pups were tested for symmetrical and asymmetrical labyrinthine stimulation. On recovery day 1, pups were used for heart rate studies of vestibular responsivity to tilt and to tactile stimulation. On recovery day 2, pups were tested for head nystagmus responses to rotation. On recovery day 3, pups were tested for symmetrical and asymmetrical labyrinthine stimulation.

Results

The flight dams observed on inflight video records displayed seven more times rolling movement than controls, probably due to the increased number of surfaces available in microgravity. Immediately postflight, flight dams in general moved less. Flight dams had uncomplicated and successful vaginal deliveries and had similar size litters. However, flight dams had significantly more lordosis contractions, probably related to space flight muscle atrophy. Pups had no difference in the success or latency of the righting response, indicating the flight groups retained the ability to orientate themselves with respect to gravity. Flight pups tested on recovery day 3 had a diminished water righting response, but flight pups tested on recovery day 5 could not be distinguished from control animals. Flight pups showed the same response as controls during the rotary stimulus but were less likely to perform the postrotary righting response.

Title of Study

Effect of Microgravity on Epidermal Development in the Rat

Science Discipline

Developmental biology

Investigator	Institute
Steven B. Hoath	Children's Hospital Medical Center

Co-Investigator(s)	Institute
Hussain, Ajaz	Food and Drug Administration Office of Pharmaceutical Sciences
Pickens, William L.	Children's Hospital Medical Center

Research Subject(s)

Rattus norvegicus (Sprague-Dawley rat)

Flight: 9 Female

Ground-Based Controls

Delayed synchronous: 10, Vivarium no hysterectomy: 12, Vivarium hysterectomy: 11

Key Flight Hardware

Ambient Temperature Recorder, Animal Enclosure Module

Objectives/Hypothesis

The overall goal of this study was to examine the effects of prolonged weightlessness on epidermal development in the late gestation Sprague-Dawley rat. Specifically: 1) exposure of the pregnant rat to microgravity during late gestation will diminish transplacental (maternal-fetal) calcium transport leading to decreases in total epidermal and dermal calcium content; 2) microgravity will lead to mild intrauterine somatic growth retardation and a diminution in the rate of stratum corneum formation (rate of programmed cell death); and 3) microgravity will lead to formation of a stratum corneum envelope with decreased DC electrical resistance and increased permeability to triated water.

Approach or Methods

Epidermis and whole skin (epidermis + dermis) were harvested from ground-control fetal rats and fetal rats exposed to conditions of space flight during midgestation. Morphological studies of skin development included transmission and scanning electron microscopy and determination of stratum corneum layer formation following alkaline expansion of cryopreserved tissue specimens. Tissues of fetal and term animals were assayed for calcium content by atomic absorption spectrophotometry. Transport studies of water across whole skin and determination of skin electrical properties were measured on cryopreserved sections. Current voltage profiles for skin excised from newborn rat pups were generated between -10 microamps to +10 microamps.

Results

Pregnancy in the Sprague-Dawley rat can be maintained under the adverse conditions of space flight and readaptation to terrestrial gravity. No evidence of increased fetal wastage or somatic growth retardation was observed. Vaginal delivery can be achieved following short term (3 days) readaptation to terrestrial conditions. Epidermal barrier development in the late gestational fetal rat appears to be advanced under the conditions examined. Fetal skin calcium levels are increased following development under conditions of microgravity. Neonatal epidermal calcium levels are decreased following short term readaptation to terrestrial gravity. Morphologically, the epidermal barrier is advanced by 12–24 hours. Measurement of water flux and electrical resistance of the skin support the hypothesis of a better epidermal barrier in the flight animals compared to ground controls.

Title of Study

Developmental Abnormalities

Science Discipline

Developmental biology

Investigator	Institute
Luba Serova	Institute of Biomedical Problems

Co-Investigator(s)	Institute
Saveliev, S.V.	Institute of Human Morphology
Besova, N.V.	Institute of Human Morphology

Research Subject(s)

Rattus norvegicus (Sprague-Dawley rat)

Flight: 10 dams, 10 fetuses Male/Female

Ground-Based Controls

Delayed synchronous: 10 dams, 10 fetuses; Vivarium: 10 dams (laparotomized), 10 dams (nonlaparotomized), 10 fetuses, 10 pups

Key Flight Hardware

Ambient Temperature Recorder, Animal Enclosure Module

Objectives/Hypothesis

Our previous experiments have revealed that an adult organism may well remain functional and a developing fetus may also develop normal functions in a space environment. However, changes were also observed in space-flown fetuses and animals. In this experiment it is assumed that a longer flight and exposure to microgravity may aggravate these changes. The purpose of this experiment is to perform a morphological and histological examination of rat pups that developed during the mother's exposure to microgravity during gestation days 9 through 20.

Approach or Methods

Developmental abnormalities were studied in newborns obtained on the 22nd/23rd gestational day. We were provided with a newborn pup from the flight and synchronous rats and from both vivarium controls. After isoflurance anesthesia, the newborn pups were fixed in Bouin's solution. The fixed pups were examined and observed defects were measured subjectively. The surface skin area was measured with a digitizer attached to a PC. Pup volume was determined according to the method of ethanol displacement. Serial sections of the pup were stained and examined for any changes with the aid of computer analysis.

Results

Histological examinations of the sensors of the flight animals did not reveal any abnormalities. The pups that developed in space showed disintegration of neurons in various brain compartments (cortex, hippocampus, and spinal cord). The change was similar to that observed in porencephalia but was less significant than in disease. None of the synchronous controls showed signs of neuronal disintegration. Most pups from the flight group developed an enhanced differentiation of both thyroid cells, secreting thyroid hormones, C-cells, and parathyroid cells. Those pups showed decreases in the size of the epiphysis and adenohypophysis and in the number of pinealocytes, as well as spatial rearrangement of trabeculae in the adenohypophysis.

NIH.R1-7

Title of Study
Effect of Space Flight on Development of Immune Responses

Science Discipline
Immunology

Investigator	Institute
Gerald Sonnenfeld	Carolinas Medical Center

Co-Investigator(s)	Institute
Miller, Edwin S.	Harrington Cancer Center

Research Subject(s)
Rattus norvegicus (Sprague-Dawley rat)
Flight: 10 Female

Ground-Based Controls
Delayed synchronous: 10, Vivarium: 20

Key Flight Hardware
Ambient Temperature Recorder, Animal Enclosure Module

Objectives/Hypothesis
The objectives of this experiment are as follows: 1) to evaluate the influence of space flight on the maternal-fetal interface; 2) to evaluate the influence of space flight on the development of immune system cells; 3) to evaluate the influence of space flight on the development of functional activities of immune system cells; 4) to evaluate the influence of space flight on the development of immunoregulation; 5) to evaluate the influence of space flight on the development of immune responsiveness to cytokines; and 6) to evaluate the influence of space flight on the ability to resist microbial infection.

Approach or Methods
Total antibody titer and percent antibody isotype was determined in the plasma of the mother and progeny animals. Flow cytometric analysis of the percentages of leukocyte populations were performed on spleen, blood, and bone marrow tissues. Splenocytes and thymocytes were stimulated with the T cell mitogen concanavalin-A to evaluate blastogenic potential in progeny animals. Profiles of a broad spectrum of splenic and thymic cytokine activities were conducted at the genetic level as revealed by polymerase chain reaction (PCR). Bone marrow cells were incubated in the presence of macrophage-colony stimulating factor (M-CSF) to stimulate the differentiation of these cells into macrophages. Splenic macrophages harvested from progeny animals were analyzed for their ability to phagocytize pathogenic bacteria.

Results
The response of bone marrow cells to M-CSF, leukocyte blastogenesis, and cytokine production were altered in cells obtained from flight dams. Contrastingly, the response of bone marrow cells to M-CSF as well as leukocyte blastogenesis were not altered in cells taken from fetuses and pups from flown animals. Leukocyte subset analysis showed that flown dams, fetuses, and pups were altered. Cytokine production was reduced in flight pups, while immunoglobulin levels were not altered in offspring after space flight. This data indicates that there may be differential regulation in the development of immune responses.

Title of Study

Fluid Electrolyte Metabolism

Science Discipline

Metabolism and nutrition

Investigator	Institute
Luba Serova	Institute of Biomedical Problems

Co-Investigator(s)	Institute
Natochin, Y.V.	Sechenov Institute of Evolutionary Physiology and Biochemistry
Shakmatova, E.I.	Sechenov Institute of Evolutionary Physiology and Biochemistry

Research Subject(s)

Rattus norvegicus (Sprague-Dawley rat)

Flight: 10 dams, 10 fetuses Male/Female

Ground-Based Controls

Delayed synchronous: 10 dams, 10 fetuses; Vivarium: 10 dams (laparotomized), 10 dams (no surgery), 10 fetuses, 10 pups

Key Flight Hardware

Ambient Temperature Recorder, Animal Enclosure Module

Objectives/Hypothesis

Our previous experiments have revealed that an adult organism may well remain functional and a developing fetus may also develop normal functions in a space environment. However, changes were also observed in space-flown fetuses and animals. In this experiment it is assumed that a longer flight and exposure to microgravity may aggravate these changes. The purpose of this experiment is to accumulate new data concerning the metabolism of water and electrolytes in the placentas and fetuses that developed during space flight.

Approach or Methods

Animals were laparotomized on the 8th gestational day to measure implantation rate, and unilaterally hysterectomized on the 20th gestation day to remove one uterine horn. Animals were flown from the 9th through the 20th gestational day. One fetus and placenta from the flight, laparotomized vivarium controls, and synchronous groups were analyzed. Fetus organs were dissected, dried to a constant weight at 105 °C to measure content, and then ashed in concentrated nitric acid at 90 °C. Sodium and potassium were measured in air propane flames using a Corning-410 photometer; calcium, copper, iron, and magnesium were measured in air-acetylene flame using a Hitachi atomic absorption spectrophotometer. Placentas were also analyzed for the same parameters.

Results

Water, sodium, potassium, magnesium, and iron in placentas of the flight dams did not differ from those in synchronous and vivarium dams. Calcium in the placenta of the flight dams was lower than in synchronous dams and identical to that in vivarium controls, whereas copper in the placentas of the flight dams was higher than in the vivarium controls and very similar to that in synchronous dams. Water, sodium, and magnesium in fetuses of the flight group did not differ significantly from those in the synchronous controls and were lower than in the vivarium controls. Potassium, calcium, and copper in fetuses of the three groups were identical. Iron in the fetuses of the flight group was higher than in the synchronous group and identical to that in the vivarium controls. The data obtained allow the conclusion that no changes in water, sodium, potassium, iron, or copper in the fetuses and placentas were observed that can be attributed to the effect of microgravity. Minor changes seen in the flight fetuses and placentas were also observed in the synchronous group.

NIH.R1-9

Title of Study

Effects of Space Flight on Muscles and Nerves

Science Discipline

Muscle physiology

Investigator	Institute
Kathryn I. Clark	University of Michigan

Co-Investigator(s)	Institute
Barald, Kate F.	University of Michigan
Feldman, Eva L.	University of Michigan
Sullivan, Kelli A.	University of Michigan

Research Subject(s)

Rattus norvegicus (Sprague-Dawley rat)

Flight: 10 dams, 14 pups, 20 fetuses Female/Male

Ground-Based Controls

Delayed synchronous: 10 dams, 16 pups, 22 fetuses; Vivarium: 10 dams, 16 pups, 30 fetuses

Key Flight Hardware

Ambient Temperature Recorder, Animal Enclosure Module

Objectives/Hypothesis

The purpose of this experiment was to determine the influence of gravity on anatomical, cellular, and molecular aspects of neuromuscular development and maintenance of neuromuscular systems.

Approach or Methods

Fetal thigh muscles were delineated using immunohistochemistry antibody staining of fixed and frozen cross-sections of the entire thigh. Tissues were labeled with MF20, an anti-myosin antibody which binds to embryonic, fetal, and adult skeletal muscle cells. Slides were used to compare muscle size and placement of divisions among muscles between control and experiment thighs. *In situ* hybridization with riboprobes provided a sensitive method for examining the localization (cellular distribution) of transcripts. Serial sections of tissues were cut and hybridized with anti-sense riboprobes generated to be non-isotopic. Probes were generated to be complementary to the mRNA of alpha-skeletal actin, MLC1/3 fast, MHCperi. Sections were compared to those from embryos developed in normal gravity. Adult spinal cords, dorsal root ganglia, and muscles were examined for gene and protein expression of neurotrophin-3 (NT-3) (muscle), tropomyosin related kinase (Trk C) (DRGs), and the presence of type 1a sensory afferents.

Results

In the developing tissues (fetuses and pups), it was discovered that the general shape of the thigh muscle was similar between the flight and control animals. However, in the flight animals there were sections within muscles that appeared to be separated from the rest of the muscles by an intramuscular sheath of connective tissue. Oddly, there appeared to be a decrease in the amount of intermuscular connective tissue in muscles from the flight animals. Three distinct proteins of the muscle responded to microgravity. In the adult tissues, we have thus far detected no differences in TrkC immunoreactivity among the experimental groups. TUNEL staining revealed no evidence of neuronal death in response to space flight. We are currently examining the levels of TrkC mRNA in DRG neurons and NT-3 mRNA and protein in the soleus and EDL of space-flown and control animals. An examination of DiI-labeled afferents into the ventral spinal cord of these animals will yield valuable information concerning the maintenance of specific connections following exposure to microgravity.

Title of Study

Development of Sensory Receptors in Skeletal Muscle

Science Discipline

Neurophysiology

Investigator	Institute
Mark Edward DeSantis	University of Idaho

Co-Investigator(s)	Institute
None	

Research Subject(s)

Rattus norvegicus (Sprague-Dawley rat)

Flight: 10 Female (pregnant), Male/female pups

Ground-Based Controls

Delayed synchronous, Vivarium

Key Flight Hardware

Ambient Temperature Recorder, Animal Enclosure Module, Circadian Periodicity Experiment Package

Objectives/Hypothesis

The objective of this experiment was to learn whether exposure to the microgravity conditions of space flight during the latter half of gestation affects the development of encapsulated sensory receptors in skeletal muscle among the offspring after they have been returned to Earth to be born.

Approach or Methods

The number, size, and intramuscular distribution of muscle spindles and tendon organs in flexor and extensor muscle were compared. The ultrastructure of muscle spindles (and tendon organs) in rats undergoing gestation in microgravity conditions were compared with receptors in synchronous control rats, paying particular attention to the size and number of intrafusal fibers and to the integrity and relative size and locations of motor and sensory nerve terminals. The hindlimb walking patterns during the initial 2 months of life were compared for rats that underwent gestation in microgravity conditions with those of synchronous controls.

Results

Data from the experiment showed the presence of muscle spindles in all flight and control soleus muscles. However, no significant differences were found between the experimental and flight subjects when all the measures for muscle spindles were examined. In a separate analysis, the vestibular nucleus was examined. Although there were no statistically significant differences between the composite volume of synchronous control, vivarium control, and flight subjects, it was observed that female rats had significantly smaller vestibular nuclear complex volume than male rats. Thus, gender seemed to be involved in the size of the adult vestibular nuclear complex. It was concluded that exposure to microgravity during the latter half of gestation does not preclude the existence of normal proprioceptive structure in newborn animals or in those that have grown to adulthood on Earth.

NIH.R1-11

Title of Study
Effects of Weightlessness on Vestibular Development

Science Discipline
Neurophysiology

Investigator	Institute
Bernd Fritzsch	Creighton University

Co-Investigator(s)	Institute
Bruce, Laura L.	Creighton University

Research Subject(s)
Rattus norvegicus (Sprague-Dawley rat)
Flight: 10 dams, 20 pups (2 per litter) Male/Female

Ground-Based Controls
Delayed synchronous, Vivarium

Key Flight Hardware
Ambient Temperature Recorder, Animal Enclosure Module

Objectives/Hypothesis
Previous studies indicate that the presence of gravity appears to be a critical factor in the development of the vestibular system. This study examines the effect of microgravity on the development of peripheral collateralization (receptor to receptor connections) and central projections to the medial vestibular nucleus of both gravistatic (utricle and saccule) and non-gravistatic (posterior vertical canal) afferents.

Approach or Methods
The embryos of 10 pregnant rats were subjected to microgravity from gestational day 9 (G9) (before vestibular ganglion neurons contact vestibular nuclei) to G19 (approximately when the vestibular system becomes somewhat functional). Approximately 3 hours after Shuttle landing, embryos were anesthetized and fixed. The saccule, utricle, and posterior vertical canal sensory epithelia were surgically revealed and exposed to DiI-soaked filter strips in order to label sensory afferent projections. After labeling, the rat brains were sectioned, mounted, and examined with epifluorescent microscopy for analysis of fiber distribution in the sensory epithelia and the medial vestibular nuclei. To determine synaptic density, suitable sections were further processed with electron microscopy.

Results
Animals subjected to microgravity conditions had slightly greater peripheral efferent collateralization than control animals, indicating that peripheral vestibular branches developed similarly in flight and control embryos. Additionally, labeled axonal projections from the saccule and utricle (gravistatic receptors) into the medial vestibular nucleus of flight animals had comparatively small growth cones and rarely had side branches. When these projections were examined under light microscopy, synaptic boutons were observable in the control animals but not in the flight animals. However, labeled projections from the posterior vertical canal (non-gravistatic receptors) into the medial vestibular nucleus were equally elaborate in both flight and control animals. Furthermore, on these projections, well developed synapses were observable on both flight and control animals. This data suggests that gravity stimulus is important for the proper development of central projections from gravistatic receptors but not important in the proper development of projections from non-gravistatic receptors.

Title of Study

Choroid Plexus, Brain and Heart Natriuretic Peptide Development in Space

Science Discipline

Neurophysiology

Investigator	Institute
Jacqueline B. Gabrion	Université de Montpellier

Co-Investigator(s)	Institute
Gharib, C.	Université de Lyon
Herbuté, S	Université de Montpellier

Research Subject(s)

Rattus norvegicus (Sprague-Dawley rat)

Flight: 10 dams, 10 fetuses, 10 pups	Female (dams), Male and Female (fetuses and pups)

Ground-Based Controls

Synchronous: 10 Dams, 10 Pups, 10 Fetuses; Vivarium: 10 Dams, 10 Pups, 10 Fetuses

Key Flight Hardware

Ambient Temperature Recorder, Animal Enclosure Module

Objectives/Hypothesis

The aims of the studies were: 1) to investigate the choroidal alterations induced by 11 days of development in space in developing rats and pups, and to compare results obtained in adult rats flown during the SLS-2 experiments with the ultrastructural and immunocytochemical observations obtained from dams dissected 2 days after landing from an 11-day space flight; and 2) to evaluate qualitative or quantitative changes in storage and biosynthesis of natriuretic peptides in cardiac tissues in rats that developed for 11 days in space and in the dams that delivered 2 days after landing.

Approach or Methods

Brains from dams, fetuses, and pups were removed after decapitation. Choroid plexuses were dissected either 3–4 hours or 2 days after landing. Samples were fixed and embedded in LX-112 epoxy resin or in 3% paraformaldehyde in PBS. The hypothalamus and remaining brain with brainstem from the same brains were removed and frozen until sectioning and observation. Whole brains from two additional animals in each group were prepared and embedded in Paraplast. Four other whole brains were frozen and stored at 80 °C. Hearts were similarly processed for electron microscopy, immunocytochemistry. Atrial and ventricle samples were frozen to be studied by radioimmunoassay, *in situ* hybridization and competitive RT-PCR.

Results

In dams, a strong restoration of the cell polarity and a restored choroidal protein expression was observed. These results suggested that after 2 days of readaptation to Earth gravity, choroidal functions were restored, indicating that secretory processes were re-established early after landing. In fetuses and pups, maturation of choroid plexuses appeared slightly delayed, in comparison with fetuses and pups developed on Earth. Results on the expression of natriuretic peptides in heart showed that cardiac atrial natriuretic peptide (ANP) biosynthesis of flight dams was increased by about twice, when compared to synchronous and vivarium control rats. Rat fetuses developed in space displayed an altered maturation of cardiac ANP, whereas the cardiac ANP storage was slightly reduced in both flight and synchronous control groups, compared to vivarium control rats. This suggested that ANP metabolism during development is impacted by both the microgravity environment and the housing conditions.

NIH.R1-13

Title of Study

An Experiment to Study the Role of Gravity in the Development of the Optic Nerve

Science Discipline

Neurophysiology

Investigator	Institute
James L. Lambert	NASA Jet Propulsion Laboratory

Co-Investigator(s)	Institute
Borchert, Mark S.	University of Southern California

Research Subject(s)

Rattus norvegicus (Sprague-Dawley rat)

Flight: 10 pups Male/Female

Ground-Based Controls

Delayed synchronous, Vivarium

Key Flight Hardware

Ambient Temperature Recorder, Animal Enclosure Module

Objectives/Hypothesis

At birth, the retinal ganglion cells project fairly accurately to the superior colliculus, the primary visual center of the rat. Previous studies show that visual stimuli is important for the proper refinement of these projections. However, it is uncertain what role other sensory stimuli may have in the development and refinement of these projections. This NIH.R1 mission provided an opportunity to observe the effects of gravity on these connections. Since the superior colliculus receives and integrates both visual and vestibular information, gravity might be expected to influence these retino-tectal connections.

Approach or Methods

Pups were exposed to microgravity during gestation, which included nearly the entire period of prenatal development of connections between the retina and the brain. On postnatal days 2, 14, 21, and 47, the rats were examined. Two days prior to examination, Fast Blue dye was microinjected into the right superior colliculus of the pups. After 2 days of recovery, the pups' retinas were dissected and prepared for microscopic analysis. The centroid area, the 2-D Gaussian distribution, and the moment invariants of the cluster of stained cells were determined. The rat brains were then dissected, fixed, and visualized under epifluorescent microscopy. A 3-D rendering of the entire superior colliculus and fluorescent injection was constructed. The percent of the superior colliculus occupied by the injection site was then calculated. The area of the 2-D Gaussian distribution of 80% of the labeled retinal ganglion cells was calculated as a percent of the area of the total retina. The ratio of the percent of retinal area stained to the percent of superior colliculus volume injected represents the expansion of the retinotopic map in the superior colliculus.

Results

In this experiment retinotopic magnification was defined as normalized area stained of retina/normalized volume stained of superior colliculus. The findings showed a normal reduction in retinotopic magnification. There were no statistically significant differences found between the flight and control groups. The results suggested that neuronal connections between the eye and the brain develop normally in weightlessness, thus, gravity does not seem to play a significant role in neuronal connection development in general.

Title of Study

Effects of Microgravity on Bone Development

Science Discipline

Bone and calcium physiology

Investigator	Institute
Nicola C. Partridge	St. Louis University

Co-Investigator(s)	Institute
None	

Research Subject(s)

Rattus norvegicus (Sprague-Dawley rat)

Flight: 10 dams, 24 pups Male/Female

Ground-Based Controls

Delayed synchronous: 10 dams, 24 pups; Vivarium: 10 nonlaparotomized dams, 10 laparotomized dams, 48 pups

Key Flight Hardware

Ambient Temperature Recorder, Animal Enclosure Module

Objectives/Hypothesis

As shown in previous studies, the development and mineralization of new bone decreases in microgravity environments. Other studies have shown that bone resorption is not effected by exposure to microgravity. Thus, the bone-forming cells, osteoblasts, have been implicated in the decrease of bone mass. Osteoblasts secrete the neural proteinases collagenase and tissue plasminogen activator (tPA) that are crucial to the process of bone mineralization. This study examines whether the expression of collagenase and tPA in rats of various ages is affected by prenatal exposure to microgravity.

Approach or Methods

Pups prenatally exposed to microgravity were delivered and prepared at various ages. Frozen blocks of bone from the pups were then sectioned for immunohistochemistry analysis. The antiserum used for collagenase was a monospecific polyclonal rabbit antiserum raised against rat osteoblastic procollagenase. The antiserum used for immunolocalization of tissue plasminogen activator was raised in rabbits against purified rat insulinoma tissue plasminogen activator. Stained sections were photographed and examined to determine distinct differences in the appearance or developmental pattern of the calvariae. The specificity of the tPA and collagenase antibodies was established with Western blot and Zymogram analyses. Thickness of the bone matrix was then analyzed with photoimagery.

Results

Staining for collagenase was present at all ages and revealed little difference between the flight and the control animals. Tissue plasminogen staining also showed no significant differences between flight and control animals. Staining revealed that tPA is localized to blood vessels and that collagenase is localized to endocranial areas that are actively being modeled and in the matrix. This result suggests that tPA and collagenase are not produced by the same population of cells. Photoimagery analysis supported the results obtained with immunohistochemistry and showed that the calvariae thickness was similar for control and flight animals. The relatively brief exposure of the pups to microgravity might account for the lack of difference noted in this study.

Title of Study

Heart Natriuretic Peptide Development in Space

Science Discipline

Cardiovascular physiology

Investigator	Institute
Jacqueline B. Gabrion	Université de Montpellier

Co-Investigator(s)	Institute
Gharib, Claude	Université de Lyon

Research Subject(s)

Rattus norvegicus (Sprague-Dawley rat)

Flight: 10 dams, 10 fetuses, 10 pups	Female (dams), Male and Female (fetuses and pups)

Ground-Based Controls

Delayed synchronous: 10 dams, 10 fetuses, 10 pups; Vivarium: 10 dams, 10 fetuses, 10 pups

Key Flight Hardware

Ambient Temperature Recorder, Animal Enclosure Module

Objectives/Hypothesis

Hearts taken from rats flown on the NIH.R2 mission were used to confirm the immunocytochemical data obtained in the experiment flown on NIH.R1. The NIH.R1 experiment used immunocytochemistry (as well as radioimmunoassays, *in situ* hybridization, and/or competitive RT-PCR) to determine qualitative or quantitative changes in storage and biosynthesis of natriuretic peptides in cardiac tissues of rats exposed to microgravity for 11 days of their development.

Approach or Methods

Hearts were processed similarly to those of NIH.R1 dams, fetuses, and pups for immunocytochemistry after fixation in 3% formaldehyde in PBS. Tissues were frozen before sectioning.

Results

Results on the storage of natriuretic peptides in hearts from the NIH.R2 experiment confirmed the immunocytochemical data obtained with NIH.R1 heart samples. Cardiac ANP biosynthesis of rat dams flown in space for 10 days and readapted to Earth's gravity for 2 days was increased when compared to synchronous and vivarium control rats. Rat fetuses developed in space displayed an altered maturation of cardiac ANP, whereas the cardiac ANP storage was reduced in both flight and synchronous control groups, compared to vivarium control rats. This suggests that ANP metabolism during development is impacted by both microgravity and the housing conditions.

Title of Study

Effects of Space Flight on the Development of the Circadian Timing System

Science Discipline

Chronobiology

Investigator	Institute
C.A. Fuller	University of California, Davis

Co-Investigator(s)	Institute
Murakami, D.M.	University of California, Davis
Hoban-Higgins, T.M.	University of California, Davis

Research Subject(s)

Rattus norvegicus (Sprague-Dawley rat)

Flight: 10 Female

Ground-Based Controls

Delayed synchronous, Vivarium

Key Flight Hardware

Ambient Temperature Recorder, Animal Enclosure Module

Objectives/Hypothesis

The objectives of this experiment were to determine the effect of space flight on: retinal development; development of the suprachiasmatic nucleus (SCN), which is the circadian pacemaker of the circadian timing system (CTS); maturation of the retino-hypothalamic tract (RHT); and the development and maturation of circadian rhythms.

Approach or Methods

Retinas were dissected, sectioned, and mounted on slides, counterstained, and analyzed for thickness of the inner-plexiform, inner-nuclear, outer-nuclear, and outer-plexiform layers. Differences in the initiation and maturation rate of laminar thickness were compared between animal groups. Coronal sections were made through the hypothalamus and mounted on slides that were counterstained and analyzed for mean soma diameter of neurons within the SCN. Coronal sections through the SCN were examined for cytochrome oxidase (CYOX) staining both within the SCN and in the surrounding regions at each age. As a provocative test of SCN function, animals from each group were either exposed to a light pulse (LP) or not (NLP). Sections through the SCN and surrounding hypothalamus were immunohistochemically stained for c-Fos reactive neurons. Brain sections containing c-Fos-labeled neurons were mounted, counterstained, and examined by light microscopy to determine differences in the number of immunoreactive SCN neurons between LP and NLP animals at the age that the RHT projection becomes functional.

Results

Histological examination of the retina revealed no differences in development between the Flight (FLT) and Flight-Delayed Synchronous (FDS) retina at G20, PN1, PN3, and PN8. The pattern of cFos activation within the SCN of the G20 animals indicated that the FLT group was significantly delayed from the FDS group at this age. These differences disappeared by PN1. There was no difference between groups in the responsiveness of the SCN to light stimulation; a robust response was present by PN5.

Title of Study

Space Flight Effects on Mammalian Development

Science Discipline

Developmental biology

Investigator	Institute
Jeffrey R. Alberts	Indiana University

Co-Investigator(s)	Institute
Ronca, April	Indiana University
Burden, Hubert	East Carolina University
Plaut, Karen	University of Vermont

Research Subject(s)

Rattus norvegicus (Sprague-Dawley rat)

Flight: 10 dams, 10 litters pups Female

Ground-Based Controls

Delayed synchronous: 10 dams, 10 litte ups; vivarium: 10 dams, 10 litters pups

Key Flight Hardware

Ambient Temperature Recorder, Animal Enclosure Module

Objectives/Hypothesis

It is hypothesized that exposure to microgravity reduces the stimulation of the developing fetal vestibular system and alters early vestibular functions in fetal rats. The purpose of this experiment is to explore that hypothesis and study the the effects of space flight on the behavior and physiology of pregnancy, labor, delivery, and the onset of postnatal care, especially with respect to lactation.

Approach or Methods

Vestibular development was studied prenatally and postnatally. A kinematic analysis of dams' behavior was conducted using daily video recordings of activity in the AEM by flight and control dams. Postflight, prenatal fetuses were externalized from the uterus while keeping umbilical and placental connections to the dam intact. Electrocardiogram (EKG) electrodes were implanted in the embryos and EKG was monitored during vestibular perturbations of a 10s, 70 degree tilt. Postnatally, pups were placed supine in and out of water and video recorded in order to evaluate their standard righting response and water immersion righting response. Pups were also subjected to rotary stimulation to evaluate their responses to horizontal rotation. Rat pregnancy and parturition were also studied. Animals were recorded inflight to observe the behavior of the dams. Immediately postflight, dams were placed in a glass chamber and videotaped before and after parturition.

Results

Flight fetuses responded more dramatically than the controls to vestibular perturbations. Pups had no difference in the success or latency of the righting response, indicating the flight groups retained the ability to orientate themselves with respect to gravity. Flight pups tested on recovery day 3 had a diminished water-righting response, but flight pups tested on recovery day 5 could not be distinguished from control animals. Flight pups showed the same response as controls during the rotary stimulus, but were less likely to perform the post-rotary righting response. While inflight, the flight dams displayed seven more times rolling movements than did controls, probably due to the increased number of surfaces available in microgravity. Immediately postflight, flight dams in general moved less. Flight dams had uncomplicated and successful vaginal deliveries and had similar-sized litters. However, flight dams had significantly more lordosis contractions, probably related to space flight muscle atrophy.

Title of Study

Neuromuscular Development and Regulation of Myosin Expression

Science Discipline

Muscle physiology

Investigator	Institute
Kathryn I. Clark	University of California, San Diego

Co-Investigator(s)	Institute
None	

Research Subject(s)

Rattus norvegicus (Sprague-Dawley rat)
Flight: 8 dams, 4 fetuses, 28 pups Male/Female

Ground-Based Controls

Delayed synchronous: 8 dams, 28 pups; Vivarium: 8 dams

Key Flight Hardware

Ambient Temperature Recorder, Animal Enclosure Module

Objectives/Hypothesis

The objectives of this experiment were: 1) to examine the time-course of myosin heavy chain expression and the development of adult fiber types in hindlimb muscles that have been exposed to microgravity during embryonic development; and 2) to determine if the embryonic system requires gravity in order to establish normal differentiation of muscle fiber types.

Approach or Methods

Tissues from dams, gestation-day-20 fetuses, and pups at ages 1, 3, 7, 10, 14, 21, and 35 days were obtained following flight on STS-70. Launch occurred on gestation day 11 and landing was on gestation day 20. Hindlimbs and muscles from fetuses and pups were sectioned and labeled using antibodies for myogenin, MyoD, and myosin heavy chain isoforms for embryonic, neonatal, type I, type Ia, type Ib, and type Ix.

Results

In soleus and medial gastrocnemius muscles from the dams, no differences were found between flight and control animals in mean fiber area or myosin heavy chain expression.

NIH.R2-6

Title of Study

Histological Effects of Microgravity on Rat Body Wall Musculature

Science Discipline

Muscle physiology

Investigator	Institute
Richard Wassersug	Dalhousie University

Co-Investigator(s)	Institute
Fejtek, Monika	Dalhousie University

Research Subject(s)

Rattus norvegicus (Sprague-Dawley rat)

Flight: 4 Female

Ground-Based Controls

Delayed synchronous: 4; Vivarium: 4 nonlaparotomized, 4 laparotomized

Key Flight Hardware

Ambient Temperature Recorder, Animal Enclosure Module

Objectives/Hypothesis

The purpose of this study was to examine the effects of four variables on histological properties of three muscles from the rat body wall. The muscles examined were the rectus abdominis (RA), transversus abdominis (TA), and external oblique (EO). These muscles function in both locomotion and in raising intra-abdominal pressure to expel material, including pups at birth, from the body cavity. The variables examined were: 1) gestation; 2) animal caging; 3) the effect of a midline laparotomy performed early in gestation to determine fetus numbers; and 4) exposure to space flight.

Approach or Methods

One group of flight rats underwent cesarean section immediately following flight, after which muscles were removed and frozen for shipment. Serial cross sections were taken from frozen muscles of the specimens. Fiber size and density were determined by image analysis. Samples were incubated with monoclonal antibodies specific for slow myosin heavy chain (MHC) and fast MHC. Metabolic enzyme markers succinate dehydrogenase and alpha-glycerophosphate dehydrogenase were used to determine fiber oxidative capacity. Changes in enzyme levels were correlated with fiber type.

Results

All four variables listed in the objectives had effects specific to both individual muscles and to experimental conditions. The TA and RA muscles showed signs of stretching with increased gestation. EO, a rotator of the torso, hypertrophied in rats housed in complex three-dimensional group cages as compared to control rats housed singly in flat-bottom cages. The TA and EO muscles, when contracted would pull on the suture line, showed signs of atrophy in laparotomized animals. The hypertrophy of EO, an unexpected result, was consistent with the behavior of the rats in orbit. In microgravity, the rats did not float freely, but instead crawled over the cage walls and each other. This behavior requires active rotation of the torso, indicating weightlessness does not necessarily involve muscle inactivity or unloading. Changes in these muscles did not compromise the ability of the rats to give birth.

PARE1-1

Title of Study

Physiological and Anatomical Rodent Experiment 1

Science Discipline

Muscle physiology

Investigator	Institute
Marc E. Tischler	University of Arizona

Co-Investigator(s)	Institute
None	

Research Subject(s)

Rattus norvegicus (rat)

Flight: 8 Female

Ground-Based Controls

Asynchronous: 8 , Tail-suspension: 8

Key Flight Hardware

Ambient Temperature Recorder, Animal Enclosure Module

Objectives/Hypothesis

Previous to PARE.01, the only studies comparing unweighting through microgravity and unweighting through hindlimb suspension were performed on adult rats. These studies have shown that posterior hindlimb muscles, the function of which depend on opposing the pull of gravity, are the most responsive to unweighting. Another effect found in unweighting studies has been the increased response of insulin to glucose transport. This experiment was designed to test the validity of using tail-suspension methods as models for studying microgravity unweighting effects on developing rats. Another objective was to determine whether microgravity causes an increase in glucose uptake in the presence or absence of insulin.

Approach or Methods

Flight and control rats were 26 days old at the beginning of the experiment. Muscles were removed within 3 hours of landing. Body and muscle weights were measured for flight and control rats. Protein analysis for total protein content and concentration was performed on the soleus, gastrocnemius, plantaris, tibialis anterior, and extensor digitorium. The soleus and extensor digitorium were used for glucose uptake studies. The extensor digitorium served as a control to the soleus because it is not affected by loading or systemic effects. The uptake of 2-deoxyglucose was measured in the presence and absence of insulin.

Results

Despite similar food and water consumption, flight rats gained more weight than the control rats. Comparisons of muscle sizes normalized to body mass showed that flight and suspension reduced muscle mass of the soleus by 38% and 33%, respectively. Smaller differences were seen in masses of plantaris and gastrocnemius muscles and no differences were seen in anterior muscles. Protein content of the soleus muscles from flight rats was reduced by 20% and was characterized by a lower concentration. Protein content from the soleus muscles of suspended rats was reduced by 23%. In the absence of insulin, there was no difference in the rate of uptake of 2-deoxyglucose in the soleus or the extensor digitorium. However, in the presence of insulin, the uptake of 2-deoxyglucose was significantly higher in flight and suspended rats than in control rats. This increase may be caused by an increase in insulin-binding capacity caused by unloading effects.

PARE2-1

Title of Study

Space Flight Changes in Skeletal mRNA

Science Discipline

Bone and calcium physiology

Investigator	Institute
Daniel D. Bikle	Veterans Administration Medical Center

Co-Investigator(s)	Institute
Halloran, Bernard P.	Veterans Administration Medical Center
Harris, Jonathan	Veterans Administration Medical Center
Morey-Holton, Emily	NASA Ames Research Center

Research Subject(s)

Rattus norvegicus (Sprague-Dawley rat)

Flight: 6 Male

Ground-Based Controls

Delayed synchronous: 6, Tail-suspension: 6

Key Flight Hardware

Ambient Temperature Recorder, Animal Enclosure Module

Objectives/Hypothesis

Space flight can lead to osteopenia in developing rats through decreased bone formation, inhibited mineralization, and delayed maturation. This may be a result of decreased osteoblast differentiation, decreased calcium to hydroxyproline ratio, or decreased osteocalcin levels in bone and serum as observed in previous space flight studies. Of interest in osteoblast differentiation is the observed increase in alkaline phosphatase mRNA during matrix production and the subsequent increase in osteocalcin mRNA during mineralization. A decrease in mRNA levels of insulin-like-growth factor (IGF) and its receptor has also been observed. This turning on and off of gene expression may be a regulating factor in bone development and was the subject of this study.

Approach or Methods

The femora, tibia, and the region from the midtibial plateau to the femoral metaphysis were taken from flight and ground control rats for analysis. Northern analysis was performed to measure the mRNA levels of alkaline phosphatase and osteocalcin. Solution hybridization/ribonuclease (RNase) protection analysis was performed to measure the IGF-I and IGF-IR mRNA levels.

Results

Space flight transiently increased mRNA levels for IGF-I, IGF-IR, and alkaline phosphatase but decreased the mRNA levels for osteocalcin. The ratio of alkaline phosphatase to osteocalcin mRNA levels was 2.2 times higher in flight rats as compared to control rats. The increase in mRNA for IGF-I and IGF-IR was not expected, as space flight leads to a reduction in bone formation. However, studies have shown an increase in resistance to IGF-I as a response to microgravity. The observed mRNA increase for IGF-I may be a compensation to this resistance. The changes in osteocalcin and alkaline phosphatase mRNA levels are consistent with a shift towards decreased maturation. The data indicate skeletal unloading during space flight resets the pattern of gene expression in the osteoblast, giving it a less mature profile.

Title of Study

Effects of Space Flight on Morphology of the Rat Adenohypophysis

Science Discipline

Endocrinology

Investigator	Institute
Alan Mortimer	Canadian Space Agency

Co-Investigator(s)	Institute
None	

Research Subject(s)

Rattus norvegicus (Sprague-Dawley rat)

Flight: 6 Male

Ground-Based Controls

Delayed synchronous: 6

Key Flight Hardware

Ambient Temperature Recorder, Animal Enclosure Module

Objectives/Hypothesis

Space flight has been shown to have a profound effect on homeostasis in both humans and rats. The endocrine system plays a significant role in homeostasis and is particularly sensitive to the effects of space flight. The function of the adenohypophysis may have a strong influence in these endocrine changes. Given that changes in adenohypophyseal functions may lead to endocrinological changes, the purpose of this study was to comprehensively examine the morphological response of adenohypophyseal cell types to space flight.

Approach or Methods

Immunochemistry was performed on both flight and synchronous control rats. Antibodies for growth hormone (GH), prolactin (PRL), adrenocortropic hormone (ACTH), thyroid stimulating hormone, follicle stimulating hormone, and luteinizing hormone were used. Gonadotroph and corticotroph sizes were measured and corticotroph cells were counted. Semithin sections of pituitary tissue were stained and the ultrastructure was examined using transmission electron microscopy. Cellular distribution of mRNAs for GH, PRL, and proopiomelanocortin (POMC) was determined by *in situ* hybridization.

Results

Significant enlargement of corticotrophs was seen in flight rats. Nuclear and cytoplasmic size increased in equal magnitudes. Corticotrophs showed ultrastructural evidence of enhanced secretory activity. The expression of POMC mRNA, the transcript for the precursor of ACTH, was also increased. Gonadotrophs also exhibited a significant increase in size but did not show ultrastructural evidence of enhanced secretory activity. No changes were seen in the overall cell type of any singular adenohypophyseal cell type. No evidence of cell necrosis or injury was seen in adenohypophyseal secretory or vascular elements. In conclusion, changes were seen in only two of the five secretory cells of the anterior pituitary, indicating that the adenohypophysis is resistant to the effects of space flight. Changes in corticotrophs and gonadotrophs appear to be a result of compensatory changes in the endocrine system, rather than pathological damage to the anterior pituitary.

PARE2-3

Title of Study

Influence of Space Flight on the Production of Interleukin-3 and Interleukin-6 by Rat Spleen and Thymus Cells

Science Discipline

Immunology

Investigator	Institute
Edwin S. Miller	University of Louisville

Co-Investigator(s)	Institute
None	

Research Subject(s)

Rattus norvegicus (Sprague-Dawley rat)

Flight: 6 Male

Ground-Based Controls

Delayed synchronous: 6

Key Flight Hardware

Ambient Temperature Recorder, Animal Enclosure Module

Objectives/Hypothesis

Space flight is known to affect the immune system at the regulatory cytokine network level. These effects may cause astronauts and mammals to be more susceptible to health problems. Interleukin-3 (IL-3) is a colony stimulating factor (CSF) and interleukin-6 (IL-6) can serve as a lymphocyte proliferator. Both are important in elements of the immune system. The purpose of this study was to examine the effects of space flight on the activity of IL-3 and IL-6.

Approach or Methods

After 7 days of space flight, the spleen and thymus were taken from rats and assayed for the ability to secrete IL-3 and IL-6. Cells from the spleen and thymus were incubated with either concanavalin A or the monocyte/macrophage activator lipopolysaccharide to stimulate IL-3 and IL-6 production. To assay for IL-3, IL-3 colony stimulating factor-dependent cell line 32D was used. To assay for IL-6, IL-6 dependent cell line 7TD1 was used.

Results

Production of IL-3 was higher in the spleen and thymus cells harvested from flight rats as compared to ground controls. IL-6 production was higher in the thymus cells of flight rats but not in the spleen cells. These results show that space flight can enhance the production of cytokines in the immune system. The immunomodulatory factor responsible for this enhancement is not understood through this study.

Title of Study

Effects of Zero Gravity on Biochemical and Metabolic Properties of Skeletal Muscle Fiber-Types

Science Discipline

Muscle physiology

Investigator	Institute
Kenneth M. Baldwin	University of California, Irvine

Co-Investigator(s)	Institute
Ciaozzo, Vince	University of California, Irvine

Research Subject(s)

Rattus norvegicus (Sprague-Dawley rat)

Flight: 6 Male

Ground-Based Controls

Delayed synchronous: 6, Vivarium: 6

Key Flight Hardware

Ambient Temperature Recorder, Animal Enclosure Module

Objectives/Hypothesis

Microgravity has a dramatic effect on skeletal muscle during space flight. The types and quantities of contractile proteins of skeletal muscle fibers play an important role in determining the muscle function. The objective of this study was to determine the effect of space flight on myosin composition of the soleus muscle through the investigation of mechanical properties of skeletal muscle determined by the types and quantity of myosin, the myosin heavy chain (MHC) protein isoform composition, and the MHC mRNA isoform content.

Approach or Methods

The soleus muscle was taken from rats after 6 days of space flight. Maximal isometric tension was measured and normalized to the physiological cross section area of the muscle. Maximal shortening velocity was determined and expressed as mm/s and muscle length/s. The percentage of slow type I and fast type IIA myosin heavy chain (MHC) protein isoforms were determined for the soleus muscle as well as the corresponding mRNA content for each MHC fiber type protein isoform.

Results

A 5% reduction in maximal isometric tension was found in the soleus muscle, expressed in N/cm^2. In contrast to the decreased tension force, maximum shortening velocity increased 15% in the soleus muscle. It is speculated that to compensate for decreased isometric tension, maximum shortening velocity increases so the muscle can be stimulated at higher frequencies. Little change was seen in the percentage of slow Type I and fast Type IIA MHC protein isoforms. Fast Type IIX MHC protein isoform content increased by 10% of the total MHC protein isoform content. This increase may account for the increase in maximum shortening velocity. The mRNA content for fast Type IIX MHC isoform was also significantly increased. This is consistent with the increase in the fast Type IIX MHC protein isoforms. Based on this and other information, it appears muscle atrophy in microgravity is isoform-specific.

PARE2-5

Title of Study

Effect of Space Flight on Oxidative and Antioxidant Enzyme Activity in Rat Diaphragm and Intercostal Muscles

Science Discipline

Muscle physiology

Investigator	Institute
Beverly Girten	Houghten Pharmaceuticals

Co-Investigator(s)	Institute
Ronald Tuttle	Houghten Pharmaceuticals
Mona Lee	Houghten Pharmaceuticals

Research Subject(s)

Rattus norvegicus (Sprague-Dawley rat)

Flight: 6 Male

Ground-Based Controls

Delayed synchronous: 6

Key Flight Hardware

Ambient Temperature Recorder, Animal Enclosure Module

Objectives/Hypothesis

Previous studies show oxidative marker enzymes respond to microgravity differently in different muscle fibers. In hindlimb-suspension studies, oxidative enzyme levels have been shown to both increase and decrease in different experiments. The purpose of this experiment was to examine the effects of microgravity on oxidative and antioxidative enzyme levels in respiratory muscles.

Approach or Methods

Diaphragm and intercostal muscles were taken from rats after 7 days of space flight. A portion of each tissue sample was homogenized and enzyme analysis was performed on the supernatant. Citrate synthase activity was measured using spectrophotometry. Superoxide dismutase levels were measured to indicate antioxidant activity. Lipid peroxidation was determined through levels of malondialdehyde and 4-hydroxyalkenal, by-products of lipid peroxidation.

Results

An increase in citrate synthase activity (an oxidative activity) was seen in diaphragm muscles but not in intercostal muscles. A significant decrease was seen in lipid peroxidation activity of the diaphragm. Lipid peroxidation of the intercostals was not significantly affected. Antioxidant activity remained unchanged in the diaphragm. These results are inconsistent with previous hindlimb unloading studies, in which citrate synthase activity decreased and peroxidation products increased in hindlimb muscles such as the soleus. This may be due to the fact that respiratory muscles do not experience unloading as a result of space flight; instead diaphragm muscles remain passively tense and tonic activity of intercostal muscles increases.

Title of Study

Effects of Space Flight Stress on Proopiomelanocortin, Proenkephalin A and Tachykinin Neuropeptidergic Systems in the Rat Posterior Pituitary

Science Discipline

Neurophysiology

Investigator	Institute
D.M. Desiderio	University of Tennessee, Memphis

Co-Investigator(s)	Institute
None	

Research Subject(s)

Rattus norvegicus (Sprague-Dawley rat)

Flight: 6 Male

Ground-Based Controls

Delayed synchronous: 6

Key Flight Hardware

Ambient Temperature Recorder, Animal Enclosure Module

Objectives/Hypothesis

Stress is known to cause an increase in the secretion of beta endorphins and methionine enkephalins into the blood stream. Both of these substances have a sedative effect or inhibit stimulation. Substance P is also an important neuropeptide in the stress process due to its ability to normalize stress disorders. The objective of this study was to examine the levels of these peptides in response to the unique stresses of space flight.

Approach or Methods

Flight rats experienced 5 days of space flight including launch and landing stresses. The posterior pituitary was dissected from the rats 5–12 hours after landing. Total protein content was determined using microcolorimetry. Radioimmunoassays were used to determine beta-endorphin-like immunoreactivity (βE-li), methionine enkephalin-like immunoreactivity (ME-li) and substance P-like immunoreactivity (SP-li). These results were compared to the same measurements taken from ground-control rats.

Results

Statistical analysis showed levels of ME-li and SP-li in the flight rats to be significantly lower than levels in control rats. There were no differences found in βE-li levels of flight and control rats. This indicates that proenkephalin A and tachykinin neuropeptidergic systems respond to the stresses of space flight (as indicated by lower levels of ME-li and SP-li), whereas the proopiomelanocortin neuropeptidergic system does not (as indicated by the lack of change in βE-li levels).

PARE3-1

Title of Study

Acute Adaptation of Bone to Space Flight

Science Discipline

Bone and calcium physiology

Investigator	Institute
Emily R. Morey-Holton	NASA Ames Research Center

Co-Investigator(s)	Institute
Turner, Russell T.	Mayo Clinic

Research Subject(s)

Rattus norvegicus (Sprague-Dawley rat)

Flight: 16 Male

Ground-Based Controls

Basal: 6, Delayed synchronous: 16, Tail suspension: 16, Vivarium: 16

Key Flight Hardware

Ambient Temperature Recorder, Animal Enclosure Module

Objectives/Hypothesis

Animals on Earth experience the constant loading of gravitational forces on their skeletal system. These forces are a factor in determining size, shape, and strength of bones. When growing bones are unloaded, maturation is delayed and growth rate is reduced. There may be an increase in size and mass but not in strength. The hypothesis of this experiment is that gravity is necessary for normal development of bone structure and furthermore, that unloading causes defective bone growth. The expression of the skeletal growth factor TGF-β after exposure to microgravity was also examined.

Approach or Methods

Flight rats were sacrificed 4, 24, and 72 hours postflight. Hematoxylin- and eosin-stained sections of the ligament were analyzed using a nuclear morphometric assay. Total cellular RNA was isolated from long bone periosteum and cancellous metaphysis and characterized by Northern analysis.

Results

Northern analysis showed mRNA levels for the skeletal growth factor TGF-β reduced by 57% in the periosteum. However, reloading upon return to 1 G caused an increase to 309% of levels found in the ground controls by 24 hours postflight. TGF-β mRNA levels returned to normal by 72 hours postflight. No changes in mRNA levels were observed in the metaphysis. Nearly identical results were found in the simultaneous hindlimb suspension control. These results indicate both a depression in osteoblast precursor cell differentiation caused by microgravity and tissue-specific responses to dynamic weight bearing.

Title of Study

Cell Kinetic and Histomorphometric Analysis of Microgravitational Osteopenia

Science Discipline

Bone and calcium physiology

Investigator	Institute
Eugene W. Roberts	Indiana University

Co-Investigator(s)	Institute
Garetto, Lawrence P.	Indiana University

Research Subject(s)

Rattus norvegicus (Sprague-Dawley rat)

Flight: 16 Male

Ground-Based Controls

Basal: 6, Delayed synchronous: 16, Vivarium: 16

Key Flight Hardware

Ambient Temperature Recorder, Animal Enclosure Module

Objectives/Hypothesis

The main hypothesis of this experiment was that space flight blocks osteoblast formation; however, it rapidly recovers upon return to Earth. The study attempted to gain a better understanding of the way that physiological processes adapt both to microgravity and a return to an Earth environment. In order to achieve this, four goals were established: 1) DNA synthesis that lead to pre-osteoblast cell proliferation was studied through the use of a specific marker—this method would yield new results that could build on previous research; 2) To confirm previous findings that suggested the presence of postflight inhibition of osteoblast formation; 3) To determine if the block to osteoblast formation is confined to specific areas of the skeleton; 4) To determine how long it takes for osteoblast formation to recover after space flight.

Approach or Methods

The incidence of osteoblast formation sites during a 9-day flight as well as their rates of apposition at 4–6, 24, and 72 hours after space flight were studied. Rat fibroblast-like osteoblast precursor cells from both maxillary molar periodontal ligaments (PDL) and mandibular condyle cells were analyzed using a nuclear morphometric assay. The PDL cells were placed in ~4M Hematoxylin and stained with eosin to obtain the relative number of preosteoblasts. The cell kinetics of osteoblast histogenesis at 4–6, 24, and 72 hours postflight were assessed to record the path of recovery of osteoblast production.

Results

Analysis of fibroblast-like osteoblast precursor cells in rat PDL yielded a statistically significant reduction in osteogenic precursor formation after a return from a microgravity environment. Production quickly returned to normal levels, and after 24 hours most cell populations were at preflight levels. These findings supported the hypothesis that microgravity inhibited osteoblast formation. However, analysis of the rat mandibular condyle cells showed that microgravity had not significantly affected osteoblast production. This was most likely due to the fact that the cells were growing rapidly, and thus the genetic need to produce new cells outweighed the effects of microgravity. Further study of adult mandibular condyle cells is needed and would be most relevant to human space flight, particularly of growing individuals.

Title of Study

Microgravity-Induced Effects on Pituitary Growth Hormone Cell Function (PHCF): A Mechanism for Muscle Atrophy in Manned Space Flight

Science Discipline

Endocrinology

Investigator	Institute
Wesley C. Hymer	Pennsylvania State University

Co-Investigator(s)	Institute
Grindeland, Richard E.	NASA Ames Research Center
Morrison, Dennis R.	NASA Johnson Space Center

Research Subject(s)

Rattus norvegicus (Sprague-Dawley rat)
Flight culture vials: 165

Ground-Based Controls

Basal culture vials: 165, Delayed synchronous culture vials: 165

Key Flight Hardware

Altered Kit Container, Ambient Temperature Recorder, Refrigerator/Incubator Module

Objectives/Hypothesis

1) To establish the effect of microgravity on storage, synthesis, and secretion of GH by rat pituitary cells; 2) to study the effects of hydrocortisone and hypothalamic GH-releasing hormone (GHRH) on GH cells; 3) to determine whether these changes persist *in vitro* after flight; 4) to determine whether microgravity affects the molecular form of GH; and 5) to determine the effects of microgravity on the ultrastructure of the somatotroph and whether there is a difference in somatotrophs from the dorsal or ventral area of the pituitary gland, as well as from the high- vs. low-density somatotrophs contained in the pituitary.

Approach or Methods

Cells were divided into five location/density-based groups. After flight, cultures were tested for their responsiveness to a synthetic GHRH. Concentration of immunoreactive GH (iGH) released from the cells into the culture media was determined by enzyme immunoassay. Concentrations of biologically active GH in the culture media and extracts were measured using bioassays. High performance liquid chromatography was used to determine the molecular weights of GH released from flight and ground-control cells. Immunocytochemistry was used to identify GH cells and flow cytometry was used to study their cell morphology and to quantitate numbers of somatotrophs in each sample.

Results

Image analysis of GH cells from mixed and high-density groups showed an increase in cytoplasmic areas of flight cells. There were no differences in area of the low-density group. Microgravity did not affect the release of iGH during flight or during the 6-day postflight period. Release of bGH was reduced in the high-density flight cells, but treatment with hydrocortisone raised the levels to that of the ground controls. Hydrocortisone had the opposite effect on low-density and mixed-density flight cells. A greater fraction of high molecular weight iGH was found in flight samples, but in general, neither microgravity or steroids had an effect on the size distribution of the hormone. Flight cells were less sensitive to GHRH than ground cells. No changes were seen in release of iGH between flight and ground-control cells of the dorsal or ventral regions; however, the release of bGH was reduced by half in ventral flight cells as compared to ventral ground-control cells. In summary, data show that changes in chemical and cellular makeup of cell cultures affect GH cell-response to microgravity.

Title of Study

Effect of Weightlessness on Bone Histology, Physiology, and Mechanics

Science Discipline

Bone and calcium physiology

Investigator	Institute
William W. Wilfinger	Pennsylvania State University

Co-Investigator(s)	Institute
Rodan, Gideon A.	Merck & Co., Inc.
Hymer, Wesley C.	Pennsylvania State University

Research Subject(s)

Rattus norvegicus (Sprague-Dawley rat)

Flight: 12 Male

Ground-Based Controls

Delayed synchronous: 12, Vivarium: 8

Key Flight Hardware

Ambient Temperature Recorder, Animal Enclosure Module

Objectives/Hypothesis

Degenerative changes observed in the musculoskeletal systems of astronauts and experimental animals during prolonged exposure to weightlessness parallel the slower changes in bone and muscle mass seen during the aging process on Earth. This experiment aims to use this similarity to test the effectiveness of a Merck & Co. proprietary compound (MK-217) in preventing bone loss, for possible future use in treating disuse osteoporosis. The morphological and physiological effects of MK-217 on bone formation and resorption during a 9-day space flight will be measured. The experiment will also use the data collected to analyze the effectiveness of the bone unloading experienced during microgravity exposure as a model for disuse osteoporosis.

Approach or Methods

Prior to flight, rats received injections of either MK-217 or a vehicle control. All rats received injections of the bone marker calcein. Postflight, all rats received injections of a second bone marker, oxytetracycline. Urine, blood, fecal, and oropharyngeal samples were taken. The animals were then euthanized and immediately shipped to the commercial laboratory for further analysis of the effects of microgravity and the proprietary compound on cortical bone formation and resorption.

Results

The Merck compound was reported to significantly reduce microgravity-induced endocortical bone resorption in comparison with saline-treated controls. Periosteal bone formation was significantly reduced in the flight animals and the delayed synchronous control group (housed in flight hardware) compared to the 22 °C vivarium controls. Either the elevated temperature in the orbiter or the flight hardware appeared to contribute to decreased bone formation.

Title of Study

Effect of Weightlessness on Bone Histology, Physiology, and Mechanics: Supplementary Studies

Science Discipline

Bone and calcium physiology

Investigator	Institute
Russell T. Turner	Mayo Clinic

Co-Investigator(s)	Institute
Backup, P.	Mayo Clinic
Westerlind, K.	Mayo Clinic
Harris, S.	Mayo Clinic
Spelsberg, T.	Mayo Clinic
Kline, B.	Mayo Clinic
Evans, G.	Mayo Clinic
Wakley, M.	Mayo Clinic

Research Subject(s)

Rattus norvegicus (Sprague-Dawley rat)

Flight: 6 Male

Ground-Based Controls

Basal: 10, Delayed synchronous: 6

Key Flight Hardware

Ambient Temperature Recorder, Animal Enclosure Module

Objectives/Hypothesis

Short-term exposure to microgravity reduces or arrests radial bone growth in young rats. As there is little evidence for a corresponding increase in bone resorption, the reduced bone strength resulting from space flight may be due to decreased bone formation, altered bone geometry, and defective material properties. Impairment of muscle tissue has also been observed. This experiment evaluates bone histomorphometry and gene expression, mRNA levels for actin in growing rats after short-term exposure to microgravity, and the effects of short-term space flight on cancellous bone turnover in the rat humerus, as cessation of linear bone growth occurs in the humeri at a very early age.

Approach or Methods

Total cellular RNA for muscle and bone was prepared and used in Northern analyses with probes for osteocalcin, glyceraldehyde-3-phosphate dehydrogenase, α-actin, β-actin, tubulin, collagen, and 18S ribosomal RNA. Femora were fixed, and sections were cut to a 150 μm thickness then ground to a 15–20 μm thickness for microscopic examination under UV light for the presence of fluorochrome labels. Histomorphometric data collected was used to calculate the periosteal bone formation rate and the periosteal mineral apposition rate. Humeri were rapidly removed and fixed. Bones were dehydrated, embedded, and sectioned in thicknesses of 5 μm for cancellous bone histomorphometry.

Results

Osteocalcin and collagen mRNA levels were significantly reduced in both long bones and calvariae, compared to ground controls. Mineral apposition rate was reduced after the 10-day flight, and a nonstatistically significant decrease was seen in periosteal bone formation rate. In periosteum, a greater percentage of decrease was seen in mRNA levels for osteocalcin and collagen (immediately following space flight) than was seen in histomorphometric measurements related to bone formation (which estimate the average change for the flight interval). Muscle tissue from the biceps muscle in flight rats was shown to express reduced steady-state levels of actin mRNA. In cancellous bone, an increase in eroded perimeter, decrease in osteoid perimeter, and decrease in osteoblast perimeter was observed postflight. Space flight had no effect on resorption of a preflight fluorochrome label. These results show that space flight depresses cancellous bone formation, without significant evidence of bone resorption.

Title of Study

Effect of Weightlessness on Tissue Regeneration in Rodents

Science Discipline

Bone and calcium physiology

Investigator	Institute
William W. Wilfinger	Pennsylvania State University

Co-Investigator(s)	Institute
Kohn, Steve R.	Space Dermatology Foundation

Research Subject(s)

Rattus norvegicus (Fischer 344 rat)

Flight: 12 Male

Ground-Based Controls

Basal: 8, Delayed synchronous: 12, Vivarium: 24 (28 and 22 °C)

Key Flight Hardware

Ambient Temperature Recorder, Animal Enclosure Module

Objectives/Hypothesis

Little is currently known about the effects of microgravity on tissue repair. In the era of a long-term human presence in space, the probability of minor injury requiring on-orbit treatment will increase. This experiment aims to evaluate the effects of space flight on the histological and tensiometric properties of full thickness abdominal incisional skin wounds in the rat. A second experimental objective was to evaluate the effectiveness of basic fibroblast growth factor (FGF) and platelet-derived growth factor (bb-homodimer, PDGF) in promoting granulation tissue formation and collagen deposition.

Approach or Methods

Flight and control rats received preflight abdominal implants of polyvinyl acetal sponge disks containing either recombinant human bFGF, recombinant PDGF-BB, or a placebo. Postflight, animals received an injection of hypothalamic-releasing hormones. After sacrifice, the sponges were removed and prepared for biochemical and histological analysis of DNA, protein, and collagen content. Histological organization, amount of visible collagen, and the resolution of hemorrhage at the infiltrating interface were also examined.

Results

Histological analysis showed that both bFGF and PDGF showed positive effects in the ground-control rats, but only immediate-release bFGF and delayed-release PDGF had significant, positive effects in the flight rats. This may be due to the 2-day launch delay of the Shuttle mission, which caused the growth factor to be released earlier during space flight than planned. Although cellular influx into the tissue space of placebo-treated sponges was unaffected by space flight, there was a significantly blunted response to either bFGF or PDGF-BB in flight animals. Microgravity significantly reduced wound collagen concentration regardless of the treatment group. The collagen concentration of granulation tissue in flight animals treated with bFGF was significantly less than in those treated with PDGF, but not significantly less than in the placebo treated group. These results show that a highly standardized wound repair process in young rats is significantly altered by space flight.

Title of Study

Effect of Weightlessness on Tissue Regeneration in Rodents: Supplementary Studies

Science Discipline

Bone and calcium physiology

Investigator	Institute
Russell T. Turner	Mayo Clinic

Co-Investigator(s)	Institute
Westerlind, K.	Mayo Clinic

Research Subject(s)

Rattus norvegicus (Fischer 344 rat) Male
Flight: 12

Ground-Based Controls

Delayed synchronous: 12, Vivarium: 12

Key Flight Hardware

Ambient Temperature Recorder, Animal Enclosure Module

Objectives/Hypothesis

Without the influence of loading forces, bone experiences osteopenia due to a decrease in bone formation and an increase in net resorption. The mechanism behind how mechanical loading stimulus is translated into response from the bone cells is still unknown. Loading causes a geometrical deformation in the bone called strain, which may trigger the production of biochemical mediators, which in turn may regulate the intercellular processes that govern bone formation and resorption. A signaling molecule that may serve in passing information from cells that sense strain to other bone cells is transforming growth factor-beta (TGF-ß). This experiment will examine the expression of TGF-ß in selected skeletal tissue after short-term weightlessness.

Approach or Methods

Two days before launch, rats were injected with a calcein fluorochrome label. Postflight, two femora and one tibia from each animal were removed, and the periosteal cells were isolated and frozen in liquid N_2. Cancellous bone from the metaphysis of the second tibia was removed and frozen in liquid N_2. Total cellular RNA was extracted from the frozen samples and used for Northern blot analysis with cDNA probes for TGF-ß and bone matrix protein type I collagen (TYPE I). Femora were fixed, ground to a thickness of 15–20 µm, and mounted in glycerol for UV microscopy. Tibial metaphysis were fixed, dehydrated, sectioned to a thickness of 5 µm, and examined by UV microscopy.

Results

Cortical bone data from femora indicated that bone formation was reduced, but there was no indication of a change in bone resorption. Cross-sectional area, cortical bone area, and periosteal bone formation and mineral apposition rates were less in flight animals than controls. Medullary area, which would be expected to increase if endocortical bone resorption had been elevated, was unchanged. Space flight did not seem to effect the rate of endochondral ossification. TGF-ß was significantly decreased in the hindlimb periosteum, but was not significantly changed in the tibial metaphysis. Similar tissue-specific changes were observed for type I collagen. The results of this experiment, a subsequent replicate experiment, and ground-based unloading models all show consistent changes in TGF-ß mRNA expression with a decrease in loading forces.

Title of Study

Role of the Immune System in Mediating Bone Turnover in Ovariectomized Rats in Microgravity

Science Discipline

Bone and calcium physiology

Investigator	Institute
William W. Wilfinger	Pennsylvania State University

Co-Investigator(s)	Institute
Hymer, Wesley C.	Pennsylvania State University

Research Subject(s)

Rattus norvegicus (Fischer 344 rat)

Flight: 12 Female

Ground-Based Controls

Basal: 6, Delayed synchronous: 12, Vivarium: 36

Key Flight Hardware

Ambient Temperature Recorder, Animal Enclosure Module

Objectives/Hypothesis

This experiment will evaluate the effect of Bone Morphogenetic Protein (BMP) on the immune and skeletal systems in microgravity. Both of these systems are impaired simultaneously during prolonged exposure to weightlessness. Simultaneous impairment of these two systems has also been observed in some diseases, suggesting that their physiological controls may be linked. This experiment will analyze the effect of BMP on the bone, connective tissue, muscle, and lymphoid systems to determine if BMP slows or prevents immune system impairment and bone demineralization.

Approach or Methods

Before launch, rats were implanted with six subcutaneous pellets each, containing either the protein or a placebo, and injected with the bone marker calcein. Postflight, animals were euthanized and turned over to the commercial partner team for biosample processing and analysis.

Results

The data from this experiment is being prepared for publication. No information is currently available.

Title of Study

Role of the Immune System in Mediating Bone Turnover in Ovariectomized Rats in Microgravity: Supplementary Studies

Science Discipline

Bone and calcium physiology

Investigator	Institute
Russell T. Turner	Mayo Clinic

Co-Investigator(s)	Institute
Cavolina, J.	Mayo Clinic
Evans, G.	Mayo Clinic
Harris, S.	Mayo Clinic
Zhang, M.	Mayo Clinic
Westerlind, K.	Mayo Clinic

Research Subject(s)

Rattus norvegicus (Fischer 344 rat)
Flight: 12 Female

Ground-Based Controls

Basal: 6, Delayed synchronous: 12, Vivarium: 12, Ovary-intact: 18

Key Flight Hardware

Ambient Temperature Recorder, Animal Enclosure Module

Objectives/Hypothesis

Estrogen is important for maintaining the balance between osteoblastic and osteoclastic activity in adults. Estrogen deficiency results in increased periosteal bone formation and an increase in activation of cancellous bone remodeling units. Bone resorption is also increased at endocortical bone sites, and bone formation is often insufficient to maintain bone volume at cancellous bone sites. This study will examine whether space flight results in cancellous bone loss above what would be observed solely from ovariectomy (OVX) and whether space flight alters the overall skeletal response to OVX.

Approach or Methods

Postflight, periosteal cells were isolated for RNA analyses from the right tibiae and femorae. Tibiae were then fixed for histomorphometry. Cortical bone, cancellous bone, bone volume, bone cell, bone formation, and bone resorption measurements were made. Northern analysis was performed with cDNA probes for transforming growth factor-beta (TGF-ß), osteocalcin (OC), and type 1 collagen. Ribonuclease protection assays were performed for insulin-like growth factor I (IGF-I) mRNA, as well as the tissue-specific expression of several cytokines. In a follow-up ground-based experiment, 66 OVX rats underwent unilateral sciatic neurotomy (USN) and estrogen replacement.

Results

Both space flight and USN resulted in site-specific decreases in cancellous bone area compared to OVX alone. Since space flight appeared to have minimal effects on bone formation, the cancellous bone loss was most likely due primarily to an increase in bone resorption greater than that caused by OVX alone. OVX also resulted in increases in mRNA for the signaling peptides TGF-ß and IGF-I. The OVX-induced increase in radial bone growth was reversed by space flight, and there was additional evidence for reduced bone formation in flight animals. Space flight did not moderate the elevated cancellous bone turnover observed in OVX rats. Alterations in expression of locally produced cytokines known to influence bone turnover were also observed in the flight rats. The cellular mechanism for the bone loss in the OVX flight rats, increased bone resorption, differs from the decreased bone formation in males. This finding suggests that endocrine status may influence the choice for a countermeasure to prevent bone loss during long-duration space flights.

Title of Study

Effect of Weightlessness on Development of Amphibian Eggs

Science Discipline

Developmental biology

Investigator	Institute
Kenneth A. Souza	NASA Ames Research Center

Co-Investigator(s)	Institute
Black, Steven	Reed College
Wassersug, Richard	Dalhousie University
Ross, Muriel	NASA Ames Research Center

Research Subject(s)

Xenopus laevis (frog)

Flight: 4 mothers, 70 tadpoles	Female

Ground-Based Controls

Synchronous: 65 tadpoles

Key Flight Hardware

Ambient Temperature Recorder, Dissecting Microscope, Frog Embryology Unit and Kits, General Purpose Work Station, Refrigerator/Incubator Module

Objectives/Hypothesis

On Earth the animal-vegetal axis of amphibian eggs will rotate upon fertilization to align with the gravitational field. This rotation plays a role in determining the polarity of the embryonic axis and may also influence normal development. The objective of this experiment was to determine whether gravity is required for normal embryonic development.

Approach or Methods

Frogs were injected subcutaneously with human chorionic gonadotropin 18 hours into flight. Eggs were collected and fertilized with a sperm suspension prepared prior to flight and refrigerated until use inflight. The eggs were inserted into chambers filled with dilute Ringer's solution. Half were incubated in the FEU centrifuge at 1 G and half were incubated in the FEU at microgravity. Some embryos were fixed inflight and sectioned and examined postflight. Approximately 50 live embryos were received by the laboratory within 3.5 hours of landing and staged. Normality was assessed by several parameters, including visual observation of the intact embryo and histomorphometry. Optomotor behavior of the tadpoles was determined based on their tendency to track a moving stimulus.

Results

Embryos at the two-cell stage showed a cleavage furrow in the normal position for both groups. There were no gross abnormalities in gastrulae, but embryos developing in microgravity had thicker blastocoel roofs. In addition, the blastopore lip formed at a slightly more vegetal latitude in the microgravity group than the 1 G group. Development to the neurula stage was unimpaired. All fixed neurula and tadpoles appeared normal. Live tadpoles, raised at microgravity and fixed shortly after landing, were found to have uninflated lungs. Although there were air bubbles in the egg chambers, the tadpoles were apparently unable to find the air-water interface and inflate their lungs. This result indicates that arrested lung development would have prevented the tadpoles from complete growth and metamorphosis in the absence of gravity. Flight tadpoles had stronger optomotor responses than control tadpoles. Because there were no gravitational clues, the tadpoles may have compensated with visual information, thus increasing the strength of their optomotor response. This difference disappeared by 9 days postflight.

SLJ-2

Title of Study

Autogenic Feedback Training Exercise (AFTE) As a Preventive Method for Space Adaptation Syndrome

Science Discipline

Neurophysiology

Investigator	Institute
Patricia S. Cowings	NASA Ames Research Center

Co-Investigator(s)	Institute
Toscano, William B.	University of California, San Francisco
Kamiya, Joe	University of California, Los Angeles
Miller, Neal	Yale University

Research Subject(s)

Homo sapien (human)
Flight: 2 Female

Ground-Based Controls

Other back-up crew members trained preflight: 1 woman, 3 men

Key Flight Hardware

Autogenic Feedback System-2, Diagnostic Scale

Objectives/Hypothesis

Space motion sickness has affected half of the astronauts and cosmonauts exposed to microgravity. Symptoms can be severely debilitating and a solution to this biomedical problem is a high priority for the safety and effectiveness of space flight. The objective of this study was to develop a method of training people to control their own motion sickness symptoms. The method of treatment is Autogenic Feedback Training (AFT). It is a combination of biofeedback and Autogenic Therapy, which involves training physiological self-regulation as an alternative to pharmacological treatment. By studying the physiological and behavioral responses to microgravity, it may be possible to facilitate adaptation to the space flight environment.

Approach or Methods

Preflight baseline data were collected, including two resting baselines, one KC-135 flight, one reclining baseline in 1 G mockup, two mission simulations, 12 formal AFT sessions, three rotating chair tests, eight follow-up AFT practice sessions, and one baseline session at L-10 days. Inflight data collection included continuous daytime monitoring on mission days 0 through 2, timelined and symptom-contingent diagnostic sessions, and timelined and symptom-contingent AFT sessions. Postflight data collections consisted of a 10-minute debriefing with each crew member on the day of landing and a 2-hour debriefing 14 days postflight.

Results

Results were collected across several different missions; however, flight data were collected for only six crew members (three treatment and three controls). The experiment was cancelled before validation could be completed on N=16 (eight treatment and eight controls) as originally proposed. The flight results showed two of the three AFTE subjects were symptom free, the third had moderate symptoms on the first mission day. None of the AFTE subjects took medication during the flight. Two of the control subjects experienced multiple vomiting episodes on the first 3 mission days, despite having taken medication. The third experienced only mild symptoms. It was concluded that AFT is effective for controlling space motion sickness in some crew members and that inflight effectiveness is related to demonstrated learning ability preflight. Autonomic measures and self-assessment scales are an effective method for assessing effects of microgravity on the functional state of individual crew members.

Title of Study

Gravity and the Stability of the Differentiated State of Plant Embryos

Science Discipline

Plant biology

Investigator	Institute
Abraham D. Krikorian	State University of New York at Stony Brook

Co-Investigator(s)	Institute
Howard Levine	State University of New York at Stony Brook

Research Subject(s)

Daucus carota (carrot) and *Hemerocallis* cv. Autumn Blaze (daylily)
Flight cell culture plates: 2

Ground-Based Controls

Simultaneous ground controls maintained at Stony Brook

Key Flight Hardware

Cell Culture Chambers, Thermal Electric Incubator

Objectives/Hypothesis

This experiment had two objectives: 1) to evaluate whether space flight affected the pattern and developmental progression of embryogenically competent daylily cells from one well-defined stage to another; and 2) to determine whether mitosis and chromosome behavior were modified by the space environment.

Approach or Methods

Embryogenically competent cell clusters from 200–400 screened fractions of daylily suspension cultures were grown in plant cell culture chambers obtained from the Japanese space agency, NASDA. Cultures of embryogenic cells were distributed on a semi-solid nutrient culture medium within the NASDA chambers. The presence of an activated charcoal filter paper disc inside the dishes provided a means of absorbing, and hence, taking any deleterious compounds out of the vicinity of the developing cells. It had been determined from ground studies that the samples would not progress significantly in their embryogenic growth and development until orbit was achieved. One plant cell culture dish was devoted to each species during the 8-day space flight. Living somatic embryos were returned for continued postflight evaluation, development, and "grow-out" operations.

Results

The somatic embryos successfully developed; however, the number of units that progressed to later stages of embryo development was diminished in flight samples, and the number of cells in division (at recovery) was consistently lower in flight samples than in controls. Significant alterations were found in the karyotypes of the space flight materials (aberrations in chromosome structure) but not in the ground controls. A substantial number of inflight samples that are normally uninucleate possessed binucleate cells. Ground control samples were uniformly uninucleate. Since the methodology for karyotype analysis involves treatment of cells and somatic embryos with colchicine, care was taken to eliminate the possibility of an increased sensitivity of the flight-exposed cells to colchicine, leading to a doubling of the nuclei. Serial sampling and examination of flight samples after recovery indicated that the number of binucleate cells diminished from some but were not eliminated.

SLS1-1

Title of Study
Bone Biomechanics

Science Discipline
Bone and calcium physiology

Investigator	Institute
A.V. Bakulin	Institute of Biomedical Problems

Co-Investigator(s)	Institute
Morey-Holton, Emily R.	NASA Ames Research Center

Research Subject(s)
Rattus norvegicus (Sprague-Dawley rat)
Flight: 10 Male

Ground-Based Controls
Basal: 5, Vivarium: 10

Key Flight Hardware
Ambient Temperature Recorder, Animal Enclosure Module

Objectives/Hypothesis
Study of mechanical properties of mammalian bones performed previously in Cosmos flights and ground-based simulation experiments has demonstrated variations in bone strength and deformability during and after exposure to microgravity. This experiment was to study mineralization parameters and mechanical properties of bones in response to repeated cyclic loading in rats after space flight.

Approach or Methods
Bone mechanical properties were examined using samples prepared from the head of the femur. The stress-deformation curve was recorded simultaneously with sample compression in every cycle. Tests were discontinued when the sample was destroyed. Proximal and distal epiphysis of the femur were put into 100% ethanol to determine porosity. Samples were then exposed to dry ashing and the ash residue was weighed for volume content of the mineral component in bone.

Results
No significant changes of the general indices of mineralization were found; the results obtained permit to speak only of a trend towards a decreased mineralization compared to the control. Meanwhile, a significant deterioration of mechanical bone properties (bone as a material) was observed. The preliminary analysis of the cyclic compression results revealed significant differences in the bone tissue behavior after the 9-day period of the postflight adaptation; these differences might be attributed to the increase of the low mineralized content of young structures in bone tissue.

Title of Study

Metabolic and Structural Changes in Bone and Systems Regulating Bone Growth and Metabolism

Science Discipline

Bone and calcium physiology

Investigator	Institute
Alexander S. Kaplansky	Institute of Biomedical Problems

Co-Investigator(s)	Institute
Popova, Irena A.	Institute of Biomedical Problems
Morey-Holton, Emily R.	NASA Ames Research Center
Durnova, G.N.	Institute of Biomedical Problems
Ilyina-Kakueva, E.I.	Institute of Biomedical Problems
Burkovskaya, T.E.	Institute of Biomedical Problems
Fedotova, N.Y.	Institute of Biomedical Problems
Loginov, V.I.	Institute of Biomedical Problems
Alekseev, E.I.	Institute of Biomedical Problems
Nazarov, V.M.	Joint Institute for Nuclear Research
Frontasyeva, M.V.	Joint Institute for Nuclear Research
Gundorina, S.F.	Joint Institute for Nuclear Research

Research Subject(s)

Rattus norvegicus (Sprague-Dawley rat)

Flight: 10 Male

Ground-Based Controls

Basal: 5, Vivarium: 10

Key Flight Hardware

Ambient Temperature Recorder, Animal Enclosure Module

Objectives/Hypothesis

Studies of the effects of short-term exposure to weightlessness on rat bone have yielded ambiguous results. For instance, Cosmos-1667 experiments revealed distinct signs of osteoporosis of the spongiosa of proximal metaphyses, while the SL-3 flight study of proximal metaphyses of rat humerus bones did not show clear indications of spongy bone osteoporosis. This study was conducted as a comprehensive morphological and biochemical investigation of changes in bones and systems regulating bone metabolism at an early stage of adaptation to microgravity. The experiment focused on bones, blood plasma, and endocrine systems that participate in bone metabolism regulation.

Approach or Methods

Content of cyclic nucleotides and activity of acid and alkaline phosphates were determined. Limb bones and lumbar vertebrae were subjected to histomorphometric examinations. Elementary analysis of bones, including trace elements, were conducted by the neutron-activation method. In the blood plasma, calcitonin, parathyroid hormone, corticosterone, calcium, sodium, potassium, phosphorus, and acid and alkaline phosphates were biochemically measured. The thyroid gland (C-cells) and adrenopituitary gland were also removed and histologic and histomorphometric examinations were performed.

Results

Results demonstrate the appearance of initial minor signs of the developing osteoporosis in the spongiosa of proximal metaphyses of tibiae, represented as a decrease in volume density of secondary spongiosa and an increase of bone resorption surface. Such changes correlate with biochemical data demonstrating a tendency towards a decrease in alkaline phosphatase activity (an enzyme of bone formation) and an increase in activity of tartrate-resistant acid phosphatase (an enzyme of bone resorption). Neutron-activation analysis revealed a decreased bone content of such macroelements as calcium, phosphorus, sodium, and chloride, which in accord with a depressed functional activity of thyroid C-cells producing calcitonin, is necessary for normal mineralization of bone matrix. In accord with previous studies, higher calcium and lower phosphorus blood content confirmed mineral metabolism disturbances. In the pituitary, a depression of somatotrophic activity occurred (a decrease of synthesis and secretion of growth hormone).

SLS1-3

Title of Study

Bone, Calcium, and Space Flight

Science Discipline

Bone and calcium physiology

Investigator	Institute
Emily R. Morey-Holton	NASA Ames Research Center

Co-Investigator(s)	Institute
Cann, Christopher E.	University of California, San Francisco
Doty, Stephen B.	Hospital for Special Surgery
Roberts, W. Eugene	Indiana University
Vailas, Arthur C.	University of Wisconsin

Research Subject(s)

Rattus norvegicus (Sprague-Dawley rat)

Flight: 30 Male

Ground-Based Controls

Basal: 30, Asynchronous: 60, Vivarium: 30

Key Flight Hardware

Ambient Temperature Recorder, Animal Enclosure Module, Research Animal Holding Facility

Objectives/Hypothesis

The purpose of this experiment was to delineate the early changes that occur in both weight-bearing and non-weight-bearing bone tissues in growing animals in different cage configurations during space flight and to relate these changes to alterations in cell proliferation and mineralization, bone subcellular characteristics, and bone biomechanics. Other objectives were to delineate the early changes that occur in both weight-bearing and non-weight-bearing bone tissues in growing animals, in different cage configurations during space flight, and to relate these changes to alterations in calcium metabolism.

Approach or Methods

Bone markers for measuring mineralization rates were injected intraperitoneally into all animals before and after launch. Bone mass and length were measured. Bone tissues were processed for bone progenitor populations and matrix synthesis using histomorphometric and autoradiographic techniques. Alkaline phosphatase and Golgi activity of the osteoblasts and perivascular cells were investigated in humoral heads. Femur, L1 vertebra, and calvaria were processed for mineralization. Nuclear volume of osteoblast cells was investigated in the maxilla. Humerus, tibia, and L4 vertebra were processed for density, calcium, collagen parameters, and mechanical properties.

Results

Group-housed rats (Animal Enclosure Module) had fewer bone changes and a faster recovery than singly housed animals. Bone mineralization rates showed significant suppression at the periosteal, but not corticoendosteal, surface during flight, and singly housed flight rats showed a greater amount of suppression. Structural properties indicated that the flight had little effect on the humerus of either single- or group-housed rats. Also, not all regions of the bones or all bones were affected by flight. In the long bones, the periosteal surface showed suppression of formation, while the endosteal surface showed little change. No changes were noted in the ribs, calvaria, vertebra, or maxilla, suggesting that the response to space flight is not uniform throughout the skeleton.

Title of Study

Osteogenesis: Tissue Factors of Regulation

Science Discipline

Bone and calcium physiology

Investigator	Institute
Victor S. Oganov	Institute of Biomedical Problems

Co-Investigator(s)	Institute
Kabitskaya, O.E.	Institute of Biomedical Problems
Morey-Holton, Emily R.	NASA Ames Research Center
Sumarokov, D.D.	Institute of Biomedical Problems

Research Subject(s)

Rattus norvegicus (Sprague-Dawley rat)

Flight: 10 Male

Ground-Based Controls

Basal: 5, Vivarium: 10

Key Flight Hardware

Ambient Temperature Recorder, Animal Enclosure Module

Objectives/Hypothesis

Bone physiological restructuring at a local level is regulated by short-distant factors that are synthesized by bone cells and released as a result of destruction of the extracellular organic matrix. This experiment was to study osteogenic potentials and the activity of osteo-induction inhibitor in the bone of space-flown rats, with special attention to bone morphogenetic protein (BMP).

Approach or Methods

Osteo-inductive activity of bone matrix was determined and the biological activity of osteo-induction inhibitor in the bone was measured. The concentration of BMP was evaluated with respect to the degree of ectopic osteogenesis induced by its demineralized matrix, determined in relation to the inhibition, or degree of inhibition, of ectopic osteogenesis produced by a standard matrix. A method of induction of ectopic osteogenesis by demineralized matrix of femur in flight and control rats (donors) was used; the concentration of elements in the mineral component was determined after implantation.

Results

Results suggest that in space osteo-inductive activity of bone matrix increases but remains unaltered in qualitative terms. The amount of *de novo*-generated bone was not large in recipient rats (less than in the controls), but the level of the bone mineralization was significant. At R+9, osteo-inductive potentials of the matrix decreased and inhibitory activity increased; that is, bone regenerative potentials declined, thus stimulating osteoporosis.

Title of Study

Effects of Microgravity-Induced Weightlessness on *Aurelia* Ephyra Differentiation and Statolith Synthesis

Science Discipline

Developmental biology

Investigator	Institute
Dorothy B. Spangenberg	Eastern Virginia Medical School

Co-Investigator(s)	Institute
None	

Research Subject(s)

Aurelia aurita (jellyfish)
Flight: 2478

Ground-Based Controls

Synchronous, Delayed synchronous

Key Flight Hardware

Ambient Temperature Recorder, Jellyfish Kit and Kit Containers, Olympus 802 Camcorder, Refrigerator/Incubator Module

Objectives/Hypothesis

Aurelia polyps and ephyrae were exposed to microgravity for 9 days as part of the SLS-1 mission. This experiment was to study the effects of microgravity on: the development of ephyrae from polyps; the development of the graviceptors (rhopalia) of ephyrae; the formation or demineralization of statoliths of rhopalia; and the swimming/pulsing behavior of ephyrae.

Approach or Methods

Polyps were induced to strobilate at 28 °C, using iodine or thyroxine, at 48 (L-48h) and 24 (L-24h) hours before launch, and 8 hours after lift-off (L+8h). Some ephyrae that formed in space were fixed in space on mission day 8, while others were fixed postflight. Postflight, light, and electron scanning microscope examinations were performed.

Results

The number of ephyrae formed per polyp were slightly higher in the L+8h groups as compared to those induced at L-24h and L-48h. On Earth, iodine is used by jellyfish to synthesize jellyfish-thyroxine (Jf-T4), which is necessary for ephyra production. Since iodine-treated polyps gave rise to ephyrae in space, it appears that jellyfish are able to synthesize Jf-T4 in space. The two groups of polyps not given the inducer still formed ephyrae in space, presumably due to enhanced Jf-T4 synthesis, utilization, or accumulation. Morphologically, ephyrae that developed in space were very similar to those that developed on Earth. Quantitation of arm numbers revealed that there were no significant differences between space and Earth-developed ephyrae. Pulsing abnormalities, however, were found in greater numbers (18.3%) than in Earth-developed controls (2.9%). These abnormalities suggest abnormal development of the graviceptors, the neuromuscular system, or a defect in the integration between systems in these microgravity-sensitive animals.

Title of Study

Determination of ANF Receptors and of Particulate Guanylate Cyclase from Rats Flown in Weightlessness

Science Discipline

Endocrinology

Investigator	Institute
Rupert Gerzer	Deutsche Forschungsanstalt für Luft- und Raumfahrt

Co-Investigator(s)	Institute
None	

Research Subject(s)

Rattus norvegicus (Sprague-Dawley rat)

Flight: 10 Male

Ground-Based Controls

Basal: 10, Synchronous: 10

Key Flight Hardware

Ambient Temperature Recorder, Animal Enclosure Module, Research Animal Holding Facility

Objectives/Hypothesis

The major stimulus for secretion of atrial natriuretic factor (ANF) is increased pressure in the cardiac atria. Since weightlessness induces a fluid shift from the lower to upper parts of the body, the secretion of ANF may be enhanced. The objective of this experiment is to determine possible alterations of ANF regulation in weightlessness.

Approach or Methods

The responsiveness of the ANF-sensitive, guanylate cyclase system was studied. Guanylyl cyclase activity was measured in the liver, and enzymatic activity was determined in response to various ANF analogs. Formed cyclic guanosine monophosphate (cGMP) was measured by radioimmunoassay.

Results

The activity of ANF-sensitive guanylyl cyclase was unaltered. Stimulation with various ANF analogs showed the same pattern response for all three groups: twofold increase with ANF as well as with urodilatin, slight increases with C-type natriuretic peptide and ANF-AP 1. These patterns indicate that there is no apparent altered receptor subtype distribution during weightlessness.

Title of Study

Effects of Space Flight on Anterior Pituitary Receptors

Science Discipline

Endocrinology

Investigator	Institute
Richard E. Grindeland	NASA Ames Research Center

Co-Investigator(s)	Institute
None	

Research Subject(s)

Rattus norvegicus (Sprague-Dawley rat)

Male

Ground-Based Controls

Synchronous, Delayed synchronous

Key Flight Hardware

Ambient Temperature Recorder, Animal Enclosure Module, Research Animal Holding Facility

Objectives/Hypothesis

It has been found that the secretion of growth hormone (GH) is decreased during exposure to actual or simulated microgravity. GH is secreted by somatotrophs in the anterior pituitary and is the primary regulator of growth. The release of GH is under the control of two hypothalamic peptides: stimulatory growth hormone releasing factor (GRF) and the inhibitor somatostatin (SS). GRF acts on the specific cell receptors of somatotrophs, thus activating the release of GH. Increased numbers of GH content and GH granules in somatotrophs after space flight suggests that the decrease in GH secretion is not due to a decrease in synthesis of GH but rather a decrease in secretion. The hypothesis of this experiment is that space flight causes an alteration in the number and/or affinity of GRF receptors that accounts for the decrease in GH secretion.

Approach or Methods

Pituitaries harvested from SLS-1 and stored at -70 °C for 2.5 years were homogenized in a Tris buffer (pH 7.4) to a final concentration of 20 mg pituitary tissue/ml of buffer. These homogenates were then assayed using iodinated GRF (human) as the radioligand and decreasing concentrations of cold GRF (rat) as the cold competitor. Concentrations of cold GRF were 10^{-6} M, 10^{-8} M, 10^{-10} M, and 10^{-12} M. Tubes containing the homogenate, the iodinated GRF, and the cold GRF were incubated for 2 hours and immersed in ice cold water to stop the reaction. Samples from each tube were centrifuged and the resulting pellets were counted using a Packard Gamma counter. Assays were performed using five groups of glands from SLS-1 as well as fresh glands for comparison purposes.

Results

Total binding from glands of SLS-1 rats and glands from fresh rats were comparable, suggesting total protein content was similar. However, specific binding was not seen in any of the SLS-1 rat homogenates. Assays from fresh glands showed a dose-response curve, indicating that binding of iodinated GRF to the pituitary receptors is specific and inhibited in a dose-dependent manner by increasing concentrations of cold GRF. The failure of flight samples to show specific binding sites suggests that the flight samples were compromised; no conclusions can be reached regarding alterations in GRF receptors due to exposure to microgravity.

Title of Study

Mechanisms of Changes in the Exocrine Functions of the Pancreas

Science Discipline

Endocrinology

Investigator	Institute
K.V. Smirnov	Institute of Biomedical Problems

Co-Investigator(s)	Institute
Pechyonkina, R.A.	Institute of Biomedical Problems
Goncharova, N.P.	Institute of Biomedical Problems
Lacy, Paul	Washington University

Research Subject(s)

Rattus norvegicus (Sprague-Dawley rat)

Flight: 10 Male

Ground-Based Controls

Basal: 5, Vivarium: 100

Key Flight Hardware

Ambient Temperature Recorder, Animal Enclosure Module

Objectives/Hypothesis

Previous space experiments demonstrated a progressive increase in the acidic-peptic potential of the stomach, as well as a simultaneous decline in the function of the pancreas. This experiment was to conduct a biochemical investigation of the exocrine compartments of the pancreas of rats after space flight.

Approach or Methods

Amylase, lipase, and trypsinogen were measured biochemically in the pancreas of space-flown rats, and the results were compared with those from appropriate controls. Amylase activity was measured by the photocolorimetric method, and lipase activity was measured using the spectrophotocolorimetric method.

Results

Investigation of the functional status of the pancreas after space flight revealed complex changes of digestive enzymes. Amylolytic activity of the pancreas was still significantly increased at R+9. No marked effect was seen in the level of trypsinogen. At R+9 there was a significant fall of lipase activity. The existence of a relative pancreatic insufficiency during space flight requires further study. Gastrointestinal tract activity was characterized by continuity of the processes of food substance hydrolysis. The interaction of the stomach, pancreas, and small intestine during readaptation to gravity is an example of self-regulation in the distribution of enzymatic activities.

Title of Study

Particulate Containment Demonstration Test (PCDT)

Science Discipline

Hardware verification

Investigator	Institute
Bonnie P. Dalton	NASA Ames Research Center

Co-Investigator(s)	Institute
None	

Research Subject(s)

Not applicable

Ground-Based Controls

Not applicable

Key Flight Hardware

General Purpose Transfer Unit, General Purpose Work Station, Research Animal Holding Facility

Objectives/Hypothesis

The Particulate Containment Demonstration Test (PCDT) was performed to ensure particulates from animals and inflight operations were contained and did not contaminate the living or working environment of the crew. The three main objectives were: 1) to determine that the RAHF and GPWS can contain solid particles of 150 microns and larger; 2) to determine that the GPWS can operationally contain fluids in nominal airflow mode; and 3) to determine that the GPTU can provide adequate secondary containment during cage transfer and servicing operations.

Approach or Methods

Packages of particulates consisting of food-bar crumbs, rodent hair, and black-eyed peas were placed in RAHF cage positions 2 and 9 (rats were not in these cages). These particulate loads were released into the cages upon activation of a pull knob that unsheathed the particulate bag. Following release of the particulates, the Biotest Reuter Centrifugal Sampler (RCS) was held in front of the RAHF to collect escaped particulates on a screen. The screens were capped and stowed for postflight analysis. Fluid containment was examined in the GPWS by pricking a fluid-filled balloon in both an empty cabinet and cabinet with laboratory equipment. Voice recordings and 8-mm video photography were used to document the test.

Results

Postflight microscopic examination of the centrifugal sampler screens revealed particulate accumulation on only one screen, and this was due to inadequate cleaning of the GPWS prior to the test. Particulates on this screen were less than 50 microns and did not exceed 20 particles per square inch. The PCDT proved particulate containment in the RAHF and GPWS to be highly successful, and live rat transfer was approved by NASA.

Title of Study

Small Mass Measuring Instrument (SMMI)

Science Discipline

Hardware verification

Investigator	Institute
Bonnie F. Dalton	NASA Ames Research Center

Co-Investigator(s)	Institute
None	

Research Subject(s)

Not applicable

Ground-Based Controls

Not applicable

Key Flight Hardware

Small Mass Measuring Instrument

Objectives/Hypothesis

The Small Mass Measuring Instrument (SMMI) was designed to measure the mass of a subject in microgravity based on the oscillation period of the subject. Due to stability problems, the units were refurbished in 1989 by Southwest Research Institute and had to undergo additional testing to fulfill all elements of verification as defined in 1986. The SMMI was flown on SLS-1 to verify its calibration maintenance capabilities before it could be used for experiment support on SLS-2.

Approach or Methods

One SMMI unit was tested on SLS-1. The unit was calibrated, and measurements of known masses were taken on flight days 4 and 6. The masses used were 175.21 g, 250.21 g, and 275.42 g. The latter mass consisted of two masses: one of 100.21 g, and one of 175.21 g. Each measurement was taken five times and the averages were calculated.

Results

The SMMI performance exceeded expectations. For the 175.21-g mass, the average measurement was 175.2; for the 250.21-g mass, the average measurement was 250.2 g; and for the two masses totaling 275.42, the average measurement was 275.3. Calibrations were reported as easy to perform and quick to obtain.

Title of Study

Regulation of Blood Volume during Space Flight

Science Discipline

Hematology

Investigator	Institute
Clarence P. Alfrey	Baylor College of Medicine

Co-Investigator(s)	Institute
Driscoll, Theda B.	Baylor College of Medicine
Nachtman, Ronald G.	Baylor College of Medicine
Udden, Mark M.	Baylor College of Medicine

Research Subject(s)

Rattus norvegicus (Sprague-Dawley rat)

Flight: 30 Male

Ground-Based Controls

Basal: 30, Asynchronous: 60, Vivarium: 30

Key Flight Hardware

Ambient Temperature Recorder, Animal Enclosure Module, Research Animal Holding Facility

Objectives/Hypothesis

In space flights as short as 7 days, an 8% to 15% reduction in red blood cell mass (RBCM) has been measured in astronauts upon landing. Current theories regarding the regulation of erythropoiesis would require an increased rate of RBC destruction to produce such changes in RBCM. However, data from humans have indicated that RBC survival time is unchanged during space flight. The objective of this experiment was to evaluate whether the rat is a suitable animal model for researching the mechanism responsible for the RBCM loss observed in humans.

Approach or Methods

Radioactive tracers were administered to animals pre- and postflight. Plasma volume (PV) was measured using ^{125}I-labeled albumin, and ^{51}Cr-labeled donor RBCs were used to measure RBCM and RBC survival. RBCM and PV were measured 8 days before launch (L-8), at recovery (R+0), and 8 days postflight (R+8). ^{51}Cr RBC survival studies were from L-7 to R+0, and R+1 to R+8. Blood samples fixed with 0.5% glutaraldehyde were coded, and the proportion of cells that had echinocytic morphology were determined in a blinded fashion. To study iron kinetics, ^{59}Fe was injected on R+0 and incorporation into RBCs was followed over the next 8 days. Serum ferritin levels and ^{51}Cr spleen-to-liver ratios were determined on R+0 and R+9.

Results

Since no statistical difference could be attributed to housing conditions, measurements from single- and group-housed animals were combined. No flight-related changes were found in hematocrit values, number of echinocytes or ^{51}Cr spleen-to-liver ratios. Upon landing, mean RBCM of flight rats was significantly less than controls, both when expressed as absolute volume or volume normalized for body mass. PV, normalized for body mass, was also significantly decreased at R+0. The ^{51}Cr survival data did not suggest an increased RBC destruction rate as the cause of the decreased RBCM. Instead, postflight decreases in ^{59}Fe incorporation could indicate a decrease in RBC production in response to space flight or to decreased food intake and weight gain postflight.

Title of Study
Regulation of Erythropoiesis during Space Flight

Science Discipline
Hematology

Investigator	Institute
Robert D. Lange	University of Tennessee Medical Center

Co-Investigator(s)	Institute
Ichiki, Albert T.	University of Tennessee Medical Center
Jones, J.B.	University of Georgia, Athens

Research Subject(s)
Rattus norvegicus (Sprague-Dawley rat)
Flight: 8 Male

Ground-Based Controls
Basal, Asynchronous, Vivarium

Key Flight Hardware
Ambient Temperature Recorder, Animal Enclosure Module, Research Animal Holding Facility

Objectives/Hypothesis
One of the most consistent findings observed in humans exposed to orbital space flights has been a decrease in the total circulating number of red blood cells (RBCs). The objective of this study was to gain an understanding of the regulatory parameters that modulate RBC production and destruction. Peripheral blood and spleen lymphocytes were studied to ascertain the immunodeficiency of the flight animals. Another objective was to determine if the rat is an appropriate animal model to study these mechanisms.

Approach or Methods
Using inflight food and water consumption data, the role of nutrition (energy balance) and of hemoconcentration was assessed in the erythropoietic response of the rat to space flight. Measurements included erythropoietin (Epo) levels, changes in hematocrit, and the rate of erythropoiesis and red blood cell production. The effect of space flight on erythropoietin responsive cell cultures was investigated. Red blood cell survival was accomplished through both reticulocyte counts and radio assays provided by other studies.

Results
The results of these studies indicated that on R+0 there was a significant decrease in the number of Epo-responsive erythroid progenitor cells. Peripheral blood showed a significant decrease in the total white blood cells and in the absolute number of lymphocytes, monocytes, and eosinophils. Immunophenotyping studies of peripheral blood lymphocytes indicated a significant decrease in the absolute number of B-cells, T-helper cells, and T-suppressor cells. All values returned to the control levels by R+9. No significant differences between flight and control animals were observed in the red blood cell parameters (RBC, Hgb, Gct), serum erythropoietin level, and reticulocyte counts.

SLS1-13

Title of Study

Effect of Space Flight Factors on the Functional Activity of Immune Cells

Science Discipline

Immunology

Investigator	Institute
Irina V. Konstantinova	Institute of Biomedical Problems

Co-Investigator(s)	Institute
Lesnyak, A.T.	Institute of Biomedical Problems
Rykova, M.P.	Institute of Biomedical Problems
Meshkov, D.O.	Institute of Biomedical Problems
Markin, A.A.	Institute of Biomedical Problems
Orlova, T.G.	Gamaleya Institute
Lange, Robert D.	Tennessee State University
Sonnenfeld, Gerald	Carolinas Medical Center
Leon, Henry A.	NASA Ames Research Center

Research Subject(s)

Rattus norvegicus (Sprague-Dawley rat)

Flight: 10 Male

Ground-Based Controls

Basal: 5, Vivarium: 10

Key Flight Hardware

Ambient Temperature Recorder, Animal Enclosure Module

Objectives/Hypothesis

The objective of this experiment was to further investigate the mechanisms underlying disorders in the immune system in microgravity. The ability to produce hormonal factors was also examined in spleen cultures.

Approach or Methods

Rat spleen cells were examined for their proliferative response to concanavalin-A (0.1, 1.0, and 10.0 μg/ml) and interleukin-2 (2 U/ml) stimulation in 48, 72, and 96-hour cell cultures. Alpha- and gamma-interferon were assayed by a microplaque reduction on vesicular stomatitis virus on L-cells. The tumor necrosis factor was determined by cytotoxicity to tumor cells. Natural cytotoxicity, using cell line K-562, was determined in bone marrow and spleen samples.

Results

T-cell activity did not change in R+0 animals, increased in the R+9 group (in unstimulated cell cultures and cultures stimulated with interleukin-2 and optimal and high concentrations of concanavalin-A), and decreased in the T+0 group (in unstimulated cell cultures, in cultures with low concanavalin-A concentrations and short-time incubation). Results indicate that spleen and bone marrow natural killer activity was increased in cultures in R+0, R+9, and S+0 (spleen cells only). There was an increase of spleen natural killer cell activity in cultures of K-562 target cells (in T+0 a small increase was noted). Bone marrow cell activity decreased slightly in R+0 animals. Compared to control rats, alpha-interferon production was unaffected. Gamma-interferon activity had not diminished after flight or tail suspension. There was an increase of tumor necrosis factor alpha production after flight. Interleukin-2 and tumor necrosis factor beta activity were decreased in the T+0 group only.

Title of Study
Lipid Peroxidation and Antioxidant Defense System

Science Discipline
Immunology

Investigator	Institute
Irena A. Popova	Institute of Biomedical Problems

Co-Investigator(s)	Institute
Markin, A.A.	Institute of Biomedical Problems
Zhuravleva, O.A.	Institute of Biomedical Problems
Merrill, Alfred H.	Emory University

Research Subject(s)
Rattus norvegicus (Sprague-Dawley rat)
Flight: 10 Male

Ground-Based Controls
Basal: 5, Vivarium: 10

Key Flight Hardware
Ambient Temperature Recorder, Animal Enclosure Module

Objectives/Hypothesis
The system of lipid peroxidation reacts regularly to adverse effects and results in enhancement of lipid peroxidation (LPO) and build-up of LPO products in blood and tissues. Cosmos experiments have suggested that a short-term stress effect, rather than any long-term adverse effects, is responsible for these changes. This experiment was to study the effect of microgravity and other space flight factors on the system of lipid peroxidation and antioxidant defense of tissues.

Approach or Methods
The content of lipid peroxidation products—dienic conjugates, malonic dialdehyde, Schiff's bases, and the main lipid antioxidant, tocopherol—were determined in the liver (right lobe), kidney (left), skeletal muscle (quadriceps femoralis), myocardial homogenates, and blood plasma. Also, the plasma total antioxidant activity was measured, and in tissue homogenates the activities of antioxidant enzymes, superoxide dismutase, catalase, glutathione reductase, and glutathione peroxidase were determined.

Results
It was found that the complex of space flight factors did not significantly influence the system of antioxidant protection and the intensity of lipid peroxidation. Changes of lipid peroxidation and antioxidant defense parameters in skeletal muscle and myocardium appeared only in rats sacrificed 9 days postflight, reflecting the existence of functional tension in these tissues as a response to gravitation stress during readaptation to terrestrial conditions. There were no significant changes of investigated parameters in blood plasma; thus, whole free-radical processes of rats were compensated during the postflight period.

SLS1-15

Title of Study

Mechanism of Formation of the Gastric Hypersecretory Syndrome of the Stomach

Science Discipline

Metabolism and nutrition

Investigator	Institute
K.V. Smirnov	Institute of Biomedical Problems

Co-Investigator(s)	Institute
Pechyonkina, R.A.	Institute of Biomedical Problems
Goncharova, N.P.	Institute of Biomedical Problems
Phillips, Robert	Colorado State University

Research Subject(s)

Rattus norvegicus (Sprague-Dawley rat)

Flight: 10 Male

Ground-Based Controls

Basal: 5, Vivarium: 10

Key Flight Hardware

Ambient Temperature Recorder, Animal Enclosure Module

Objectives/Hypothesis

During exposure to space flight factors, there are significant alterations in the morphofunctional status of the digestive system. Previous experiments revealed a progressive increase in the acidic-peptic potential of the stomach and a simultaneous stimulation of the gastrin mechanism of regulation of the chief and parietal cells of the stomach. This experiment was to conduct a biochemical investigation of the mucous membrane of the stomach of rats after space flight.

Approach or Methods

The stomach was removed and opened along the greater curvature and the contents emptied. The mucous homogenate was used to measure pepsin characterizing the activity of the chief cells of the stomach. Pepsin activity was determined by the absorption-colorimetry method.

Results

A study of the functional status of the rat stomach revealed increased peptic potential of the stomach, which was more marked on day 9 of readaptation. The hypersecretory gastric syndrome, as evidenced in flight animals, is characterized by a higher activity of the chief gastric pepsinogen-producing cells and an increased gastric level of hydrochloric acid during the interdigestive period. The growth of the gastric acid/peptic potential in the flight animals was correlated with an increased level of gastrin, the main physiologic activator of gastric epithelial cells. This series of alterations created prerequisites for increased aggression of gastric juice in relation to gastric mucosa and possible ulceration.

Title of Study

Study of the Digestive Transportation Function of the Small Intestine

Science Discipline

Metabolism and nutrition

Investigator	Institute
K.V. Smirnov	Institute of Biomedical Problems

Co-Investigator(s)	Institute
Pechyonkina, R.A.	Institute of Biomedical Problems
Goncharova, N.P.	Institute of Biomedical Problems
Phillips, Robert	Colorado State University

Research Subject(s)

Rattus norvegicus (Sprague-Dawley rat)

Flight: 10 Male

Ground-Based Controls

Basal: 5, Vivarium: 10

Key Flight Hardware

Ambient Temperature Recorder, Animal Enclosure Module

Objectives/Hypothesis

Previous experiments have revealed an increase in the acidic-peptic potential of the stomach and a decline of the functional capability of the pancreas. This experiment was to conduct a morphological and biochemical investigation of changes in the mucous membrane of the small intestine after space flight.

Approach or Methods

The duodenum, jejunum, and ileum sections of the small intestine were removed from flight and control animals, and the mucosa was examined with an electron microscope. Enzymes involved in cavity and membrane digestion (carbohydrases, peptidases, monoglyceride lipase, alkaline phosphatase) were investigated biochemically.

Results

The investigation of the functional status of the small intestine revealed complex changes of enzyme activities. In the system of protein membrane hydrolysis, there was a shift of proximodistal gradient dipeptidase activity, indicating the compensatory nature of the changes. Analysis of processes of lipid digestion revealed a number of alterations in digestive patterns manifested as a significant decrease of nonglyceridelipase activity and an increase of alkaline phosphatase activity in the proximal segment of the small intestine. These changes also reflect the compensatory and adaptational nature of the alterations. In the carbohydrase enzymatic change, no significant alterations were found. Changes of digestive/transport hydrolysis of proteins, fats, and carbohydrates were reversible and functional in nature. The adaptive nature of the rearrangements of membrane digestion is demonstrated by a self-regulatory activity of the digestive system in the distribution of enzyme activities.

SLS1-17

Title of Study

Effect of Microgravity on the Relations Between Microbiological and Epithelial Tissue and Functions of the Gastrointestinal Tract

Science Discipline

Metabolism and nutrition

Investigator	Institute
Odette Szylit	National Institute for Agronomic Research

Co-Investigator(s)	Institute
Nugon-Baudon, I.	National Institute for Agronomic Research
Andrieux, C.	National Institute for Agronomic Research
Ravisse, R.	Institut Pasteur

Research Subject(s)

Rattus norvegicus (Sprague-Dawley rat)

Flight: 30 Male

Ground-Based Controls

Asynchronous

Key Flight Hardware

Ambient Temperature Recorder, Animal Enclosure Module, Research Animal Holding Facility

Objectives/Hypothesis

Intestinal microflora have versatile enzymatic potentials that can interact directly or through its products with the host. Minor modifications of diet or digestive physiology may alter the intestinal microflora equilibrium. Space flight conditions may lead to an imbalance in the digestive microflora, thus leading to nutritional and physiological modifications. The objective of this study was to assess the bacterial and endogenous metabolic potentials of intestinal microflora, and to test the hypothesis that the digestive physiology and the detoxication system are altered after space flight.

Approach or Methods

Cecal contents were collected and pH was measured. Short-chain fatty acids (SCFA) were analyzed using gas-liquid chromatography. Glycosidase activities were expressed as the rate of p-nitrophenol released from its specific precursor. Histochemical analysis was performed on stained duodenum and ileum samples. From these samples, neutral, acid-, and sulfomucin- containing cells were counted. Mucus-containing cells (MCCs) were counted for 20 crypts and villi in each specimen. Xenobiotic metabolizing enzymes were studied through the determination of microsomal and cytosolic protein concentrations. The activity of glutathione-S-transferases was assayed in duplicate in both microsomal and cytolitic fraction using spectrophotometry with 1-chloro-2,4-dinitrobenzine as a substrate.

Results

There was a slight decrease of pH in the flight group and a significantly enhanced total SCFA concentration. This was due to increases in valerate and branched-chain acids. Effects did not last after a 9-day postflight recovery period. Of the microbial glycolytic activities that were investigated, none were modified by space flight. MCC numbers were increased for all types of mucin, with some exceptions. Nine days postflight, a further increase of the number of acid MCC in the villi, and of sulfated MCC in the crypts and the villi, occurred in the duodenum. The specific activity of microsomal glutathione-S-transferase in the flight rats was enhanced threefold and persisted to a lesser extent in the specimens that underwent a 9-day postflight recovery period.

Title of Study

Effects of Zero-Gravity Exposure on Biochemical and Metabolic Properties of Skeletal Muscle

Science Discipline

Muscle physiology

Investigator	Institute
Kenneth M. Baldwin	University of California, Irvine

Co-Investigator(s)	Institute
None	

Research Subject(s)

Rattus norvegicus (Sprague-Dawley rat)

Flight: 30 Male

Ground-Based Controls

Basal: 30, Asynchronous: 30, Vivarium: 30

Key Flight Hardware

Ambient Temperature Recorder, Animal Enclosure Module, Research Animal Holding Facility

Objectives/Hypothesis

Exposure to microgravity causes mechanical unloading of skeletal muscles. It is this unloading that is thought to play a major role in producing a loss in muscle mass and other phenotypic alterations. Given the lack of data regarding the influence of space flight in muscle function, it is important that these earlier observations be confirmed and that the effects of longer space flight missions be studied. The second area of investigation that requires examination is related to the transcriptional, translational, and post-translational regulation of myosin isoform expression. The influence of microgravity on myosin heavy chain (MHC) and mRNA isoform expression remains relatively unexplored. This study examined the effects of microgravity on: the contractile properties of the soleus, an antigravity skeletal muscle; and the MHC protein and mRNA isoform content of the soleus, vastus intermedius, plantais, and tibialis anterior muscles.

Approach or Methods

The relative and total content of isomyosin protein expression was determined by gel electrophoresis for type I, type IIa-IIx, and type IIb isoforms. Total RNA was isolated from muscles for slot-blot analysis, and mRNA was determined for type I, type II, and type IIb isoforms. Oxidative rates of palminate and pyruvate were determined from measurements of $^{14}CO_2$ production. Oxidative enzymes were measured and mitochondrial and cytoplasmic isoforms were identified by alcohol inactivation.

Results

Findings demonstrate a reduced expression of the two slow myosin heavy chain and an increased expression of the two fastest myosin heavy chain isoforms. Coupled with muscle atrophy, this tends to reduce the effective muscle mass to support antigravity function and locomotor activity. There also appeared to be a selective reduction in the capacity of the muscle to produce long-chain fatty acids, which may impair endurance during space flight. A decrease in palminate oxidizing capacity was observed in the flight animals, but no decrease was found in pyruvate oxidizing capacity in fast-twitch muscles.

Title of Study

Skeletal Myosin Isoenzymes in Rats Exposed to Zero Gravity

Science Discipline

Muscle physiology

Investigator	Institute
Joseph F.Y. Hoh	University of Sydney

Co-Investigator(s)	Institute
None	

Research Subject(s)

Rattus norvegicus (Sprague-Dawley rat)

Male

Ground-Based Controls

Unavailable

Key Flight Hardware

Ambient Temperature Recorder, Animal Enclosure Module, Research Animal Holding Facility

Objectives/Hypothesis

The objective of this study was to determine how microgravity affects muscle fiber type and muscle isomyosin composition. It was postulated that under zero gravity some slow fibers would convert to fast. Since stimuli to the slow-twitch antigravity muscles should be greatly reduced in low gravity, the concentration of myosin isoenzymes in these fibers should also be changed.

Approach or Methods

Muscles were analyzed using monoclonal antibodies against myosin heavy chains. Antibodies specific to different myosin-heavy-chain types were used to identify fast and slow fibers. Mab 5-4D was specific to the slow type I fibers, and mab 5-2B was specific for type IIa and type IIx.

Results

Soleus muscles of the flight animals showed a marked increase in the proportion of fibers expressing fast type II isomyosin. Muscle fibers tended to change from slow to fast; however, the change was not as dramatic as observed in tail-suspension studies. Slow fibers were more atrophied than fast fibers. It is likely that the conversion from slow to fast twitch fibers was not complete by the end of the flight. Changes in fiber type distribution were not detected in the extensor.

Title of Study

Contractile Properties of Skeletal Muscles

Science Discipline

Muscle physiology

Investigator	Institute
Victor S. Ogane	Institute of Biomedical Problems

Co-Investigator(s)	Institute
Murasko, L.M.	Institute of Biomedical Problems
Kabitskaya, O.E.	Institute of Biomedical Problems
Riley, Danny A.	Medical College of Wisconsin
Edgerton, V. Reggie	University of California, Los Angeles

Research Subject(s)

Rattus norvegicus (Sprague-Dawley rat)

Flight: 10 Male

Ground-Based Controls

Basal: 5, Vivarium: 10

Key Flight Hardware

Ambient Temperature Recorder, Animal Enclosure Module

Objectives/Hypothesis

In this study, the zero gravity effect upon contractile properties of skeletal muscles were studied in rats after a 9-day flight (R+0) and a 9-day postflight readaptation period. A comparative analysis of the effect of microgravity of varying duration on the contractile properties of skeletal muscles of different functional profiles (slow and fast) was performed.

Approach or Methods

Using glycerated myofibers, the following contractile properties were measured: maximum isometric strain; velocity of contraction; velocity of semi-relaxation; work capacity; time of maximum contraction development; time of semi-relaxation; and diameter of myofibers treated with ATP+Ca^{2+}.

Results

The results obtained demonstrated that the greatest changes occurred in the weight-bearing soleus and included a decrease of diameter of the muscle fibers and decreases of isometric tension and contraction velocity. There was a trend towards increase of contractile force in the fast locomotor muscle, the extensor digitorum longus (EDL), and in both heads of the gastrocnemius. A decrease of velocity of contraction and semi-relaxation was also seen in the EDL. During the readaptation period, R+9, these parameters demonstrated a trend towards normalization. These results confirm the inflight dependency of the contractile characteristics of the muscles from their functional profile.

Title of Study

Electron Microscopy, Light Microscopy, and Protease Activity of Rat Hindlimb Muscles

Science Discipline

Muscle physiology

Investigator	Institute
Danny A. Riley	Medical College of Wisconsin

Co-Investigator(s)	Institute
Ellis, Stanley	San Jose State University
Haas, A.L.	Medical College of Wisconsin

Research Subject(s)

Rattus norvegicus (Sprague-Dawley rat)

Flight: 30 Male

Ground-Based Controls

Basal: 30, Asynchronous: 60, Vivarium:30

Key Flight Hardware

Ambient Temperature Recorder, Animal Enclosure Module, Research Animal Holding Facility

Objectives/Hypothesis

This space flight study examined the degree of atrophy for muscles used primarily to oppose gravity compared with non-weight-bearing muscles and investigated the cellular and chemical basis for atrophy. Another objective was to characterize the degeneration of neuromuscular junctions. Understanding how structural and chemical changes in muscle are induced by the stress of launch, low-gravity, re-entry, and readaptation to gravity on Earth will help define how several factors contribute to muscle weakening, and effective countermeasures can be developed to overcome atrophy during space flight.

Approach or Methods

A total of 1490 muscles were analyzed by light and electron microscopy for evidence of shrinkage or death of muscle cells, breakdown of muscle fibers, or degeneration of motor nerves. The chemical basis for atrophy was investigated by immunostaining for ubiquitin proteins that catalyze the breakdown of proteins. Cross sectional areas of muscle fiber types in the slow and mixed (fast and slow) fiber regions of the adductor longus and the central portion of soleus were measured by computer-assisted digitizing morphometry of fibers in myofibrillar-ATPase-reacted sections.

Results

Space flight induced significant atrophy (fiber shrinkage) and increased expression of fast muscle characteristics (fast myosin) in the slow fibers. The slowly adapting myosin change most likely occurred inflight. Adductor longus muscles showed increased susceptibility to pathological damage upon resumption of weight bearing activity at 1 G. Postflight damage included thrombosis of the microcirculation, interstitial and cellular edema, muscle fiber fragmentation, sarcomere disruptions, activation of phagocytic cells, and elevated ubiquitin conjugation suggestive of increased protein breakdown. Accelerated aging-like involution of neuromuscular junctions was significantly more prominent in rats housed in flight cages inflight and during the delayed flight profile test (DFPT), indicating caging-induced effects. The soleus also atrophied but showed less pathology than the adductor longus, which appeared related to greater resumption of loaded contractile activity postflight by the adductor longus.

Title of Study

Ultrastructure of the Brain Cortex

Science Discipline

Neurophysiology

Investigator	Institute
Ludmilla N. Dyachkova	Severtsev Institute of Evolutionary Morphology and Ecology of Animals

Co-Investigator(s)	Institute
Lowry, Oliver H.	Washington University

Research Subject(s)

Rattus norvegicus (Sprague-Dawley rat)

Flight: 10 Male

Ground-Based Controls

Basal: 5, Vivarium: 10

Key Flight Hardware

Ambient Temperature Recorder, Animal Enclosure Module

Objectives/Hypothesis

Earlier examinations of the ultrastructure of the cerebral cortex on Cosmos has suggested that the system of interneuronal contacts of the neocortex showed the highest level of adaptive changes in microgravity. This experiment was to assess space flight effects on the ultrastructure of nervous, glial, and vascular elements of the brain cortex.

Approach or Methods

Fragments of the motor, somatosensory, and visual cortex and olfactory cortex were collected, and a layer-by-layer electron microscope examination of nervous, glial, and vascular elements of the brain cortex was conducted. While embedding in araldite, brain sections were oriented in such a way as to have all cortical layers sectioned in frontal ultrathin sections.

Results

Results demonstrated changes in neuronal and glial cells, which pointed to an active restructuring in the cortical connections of the flight rats. Motor and sensomotory ultrastructure at R+0 suggested that synapses and stellate cells were in an excitation state, which was associated with an increased afferent flow to the cortex during the 2–3 hours after recovery. Examinations at R+9 indicated both an enhanced afferent flow, as well as an increased functional activity of large pyramidal neurons of the V layer. Changes in the visual cortex of the flight rats were similar to those in the somatosensory cortex but less significant. Changes of the olfactory cortex suggested a slight decrease of the afferent flow and an increase of the functional activity of neurons postflight.

SLS1-23

Title of Study
Cytochemistry of Neurons

Science Discipline
Neurophysiology

Investigator	Institute
L.M. Gershtein	Institute of Brain Research

Co-Investigator(s)	Institute
Sergutina, A.V.	Institute of Brain Research
Daunton, Nancy G.	NASA Ames Research Center
Mehler, William R.	NASA Ames Research Center
D'Amelio, Fernando E.	NASA Ames Research Center

Research Subject(s)
Rattus norvegicus (Sprague-Dawley rat)
Flight: 10 Male

Ground-Based Controls
Basal: 5, Vivarium: 10

Key Flight Hardware
Ambient Temperature Recorder, Animal Enclosure Module

Objectives/Hypothesis
This experiment was to assess space flight effects on enzymes involved in neurotransmitter and energy metabolism in neurons of the motor and somatosensory cortex and the head of the caudate nucleus of the brain.

Approach or Methods
The left hemisphere of the brain was collected. Activities of acetyl cholinesterase, succinate dehydrogenase, and glucose-6-phosphate dehydrogenase was detected in the frontal sections of the brain by histochemical staining. Subsequent measurement of enzyme activities in neuronal elements of the motor and somatosensory cortex and the head of the caudate nucleus was conducted by densitometry methods.

Results
The study suggests that microgravity exposure results in a decreased monoamine oxidase activity in fibrillar structures of the fifth layer of the somatosensory cortex and the head of the caudate nucleus as well as a decreased acetyl cholinesterase in the bodies of neurons in the head of the caudate nucleus, which may be interpreted as a sign of: 1) a decrease, during microgravity, of the modulating influence of brain monoaminergic structures upon the somatosensory cortex and the head of the caudate nucleus; and/or 2) a decrease, during microgravity, of the inhibitory influence of the neurons of the caudate nucleus upon the globus pallidus, n. ruber, substantia nigra, and other brain structures.

Title of Study

Histochemistry of the Hypothalamus

Science Discipline

Neurophysiology

Investigator	Institute
Igor B. Krasnov	Institute of Biomedical Problems

Co-Investigator(s)	Institute
Grindeland, Richard E.	NASA Ames Research Center
Sawchenko, Paul E.	Salk Institute
Vale, Wylie	Salk Institute

Research Subject(s)

Rattus norvegicus (Sprague-Dawley rat)

Flight: 10 Male

Ground-Based Controls

Basal: 5, Vivarium: 10

Key Flight Hardware

Ambient Temperature Recorder, Animal Enclosure Module

Objectives/Hypothesis

Previous analysis of the anterior hypothalamus and the anterior lobe of the pituitary gland of rats flown on Cosmos biosatellites and Spacelab 3 revealed inhibition of the synthesis and excretion of growth hormone and the system controlling these processes. This experiment was to assess space flight effects on the GABA (gamma-aminobutyric acid) and other enzymes in the system of the hypothalamus.

Approach or Methods

The portion of the brain containing the thalamus and hypothalamus oriented in the anterior-posterior direction was dissected. Single tissue fragments, 0.2 to 1.0 μg in mass, were separated by micro-instruments from lyophilized sections (20 μm in thickness) of the arcuate nucleus and medial eminence hypothalamus. Quantitative histochemical analysis of glutamate decarboxylase and glutaminase, as well as determinations of the content of lipids and the defatted dry substance, were performed.

Results

After space flight, glutaminase activity in the arcuate nucleus was decreased by 22.7%, and glutaminase activity in the medial eminence was decreased by 30.4%. The ratios of lipids and defatted dry substance in both structures remained unchanged. Since data indicated a high sensitivity of somatoliberan-containing neurons of the arcuate nucleus to glutamate, the possible participation of glutamate in the regulation of growth hormone secretion has been suggested.

SLS1-25

Title of Study

Primary Perceptive Structure of the Brain: Morphology and Histochemistry

Science Discipline

Neurophysiology

Investigator	Institute
Igor B. Krasnov	Institute of Biomedical Problems

Co-Investigator(s)	Institute
Daunton, Nancy G.	NASA Ames Research Center

Research Subject(s)

Rattus norvegicus (Sprague-Dawley rat)

Flight: 10 Male

Ground-Based Controls

Basal: 5, Vivarium: 10

Key Flight Hardware

Ambient Temperature Recorder, Animal Enclosure Module

Objectives/Hypothesis

Electron microscopic examinations of the nodulus cortex of the cerebellum of Cosmos rats demonstrated ultrastructural changes that suggested that the vestibular flow to the cortex decreased in microgravity and drastically increased after return to the Earth's gravity. This study was to evaluate the effects of space flight on glutamic acid metabolism enzymes and ultrastructure of the nodulus of the cerebellar vermis, the medulla oblongata, and pons varolii.

Approach or Methods

Vermis and right hemisphere of the cerebellum, left side of medulla oblongata, and pons varolii were collected. Quantitative histochemical analysis of glutaminase and glutamate-asparte transaminase was performed on the cortical layers isolated from freeze-dried sections of the nodulus and in fragments isolated from freeze-dried sections of the vestibular nuclei medialis and lateralis. Nervous and glial elements of the nodular cortex and nucleus gracilis were examined by electron-microscopy.

Results

Analysis of fragments of the granular layer of the cortex of the nodulus and medial vestibular nucleus and fragments of lateral vestibular nucleus demonstrated that after 9 days of space flight, the activity of glutaminase is decreased at the endings of primary vestibular fibers. However, this was not statistically significant. In animals sacrificed 9 days postflight, glutaminase activity in the structures studied did not differ from controls.

Title of Study

Spinal Cord and Dorsal Root Ganglion Morphology and Histochemistry

Science Discipline

Neurophysiology

Investigator	Institute
Igor B. Krasnov	Institute of Biomedical Problems

Co-Investigator(s)	Institute
Drobyshev, V.I.	Voronezh Medical Institute
Poliakov, I.V.	Voronezh Medical Institute
Edgerton, V. Reggie	University of California, Los Angeles
Lowry, Oliver H.	Washington University

Research Subject(s)

Rattus norvegicus (Sprague-Dawley rat)

Flight: 10 Male

Ground-Based Controls

Basal: 5, Vivarium: 10

Key Flight Hardware

Ambient Temperature Recorder, Animal Enclosure Module

Objectives/Hypothesis

Examinations of motorneurons of the anterior horns of the lumbar and cervical enlargements of the spinal cord of rats have revealed changes suggesting a lowered activity of the nerve cells after a 14–22-day exposure to weightlessness. This experiment was to evaluate the effect of space flight factors on the nervous, glial, and vascular elements of the cervical and lumbar enlargements of spinal cord and dorsal root ganglion.

Approach or Methods

The upper half of the cervical enlargement and the lower half of the lumbar enlargement of spinal cord and dorsal root ganglion were removed and fixated. Parameters measured included: the activities of cytochrome oxidase, acetyl cholinesterase, and alkaline phosphatase; the volume of the neuronal body and nucleus; and the neuron-glial index. Studies were performed on animals sacrificed at recovery (R+0) and 9 days postflight (R+9).

Results

No changes were observed at R+0 or R+9 in the enzyme activity of the anterior horns of the spinal cord at the C2-C4 level, while a lowered cytochrome oxidase activity was observed in the motorneurons of the anterior horns of the spinal cord at the L1-L2 level. The latter fact suggests the development of a motorneurons hypofunction in the lumber enlargement as a result of the space flight. A recovery of cytochromoxidase activity in the motorneurons of the lumber enlargement at R+9 demonstrates the reversibility of the observed changes and a recovery of functional motorneuron activity during the readaptation period. An increased number of active capillaries in the anterior horns of the lumber enlargement at R+9 probably reflects an increased transport of active metabolites through the capillaries of the anterior horns, suggesting the development of a compensatory process directed at activation of metabolism in the spinal cord during the readaptation period.

SLS1-27

Title of Study

Morphology of Neurons of the Brain Cortex

Science Discipline

Neurophysiology

Investigator	Institute
T.A. Leontovich	Institute of Brain Research

Co-Investigator(s)	Institute
Makhanov, M.A.	Institute of Brain Research
Belichenko, P.A.	Institute of Brain Research
Fedorov, A.A.	Institute of Brain Research
Lowry, Oliver H.	Washington University

Research Subject(s)

Rattus norvegicus (Sprague-Dawley rat)

Flight: 10 Male

Ground-Based Controls

Basal: 5, Vivarium: 10

Key Flight Hardware

Ambient Temperature Recorder, Animal Enclosure Module

Objectives/Hypothesis

Morphological evaluation of neurons of the visual cortex of the brain of animals exposed to space flight may help gain an insight into mechanisms underlying adaptive responses of the visual organ to microgravity. This experiment was to assess space flight effects on dendrite geometry and orientation, as well as the number of dendrite processes of neurons, in the visual and somatosensory cortex.

Approach or Methods

The somatosensory (right side) and visual cortex (left side) were collected. Semi-automatic morphometric analysis of the geometry and orientation of dendrites of nerve cells after impregnation was conducted according to Golgi. Pyramidal neurons of the third layer of the visual cortex were outlined from histological preparations at a magnification of X400. Altogether, 49 neurons were outlined. By means of a digitizer, a graphic drawing of the neurons was obtained.

Results

There was a significant increase of the body size of pyramidal neurons of the flight animals. The findings show an increase in the length of apical dendrites located in the upper layers of the visual cortex, among the pyramidal neurons of the third layer. Examinations show a well-developed apical system and participation in the establishment of associative connections between various cortical compartments. This process may have been induced by the need for an additional afferent input and can act as a foundation for new connections between the visual cortex and other cortical compartments in microgravity. An enlargement of the profile size of the body of pyramidal neurons of the third layer, also at R+0, can be viewed as another indication of the restructuring of the dendrite system of these neurons in microgravity.

Title of Study

Neuronal Morphology

Science Discipline

Neurophysiology

Investigator	Institute
T.A. Leontovich	Institute of Brain Research

Co-Investigator(s)	Institute
Belichenko, P.V.	Institute of Brain Research
Fedorov, A.A.	Institute of Brain Research
Makhanov, M.A.	Institute of Brain Research
Lowry, Oliver H.	Washington University

Research Subject(s)

Rattus norvegicus (Sprague-Dawley rat)

Flight: 10 Male

Ground-Based Controls

Basal: 5, Vivarium: 10

Key Flight Hardware

Ambient Temperature Recorder, Animal Enclosure Module

Objectives/Hypothesis

Previous space flight studies have demonstrated consistent changes in morphometric parameters of the geometry and orientation of dendrites of neurons of the medulla oblongata of rats. This experiment was to assess space flight effects on the geometry and orientation of dendrites of command neurons of the giganto-cellular reticular nucleus and neurons of the superior and median vestibular nuclei.

Approach or Methods

Tissues collected included medulla oblongata and pons varolii, right side (one sample). Semi-automatic morphometric analysis of the geometry and orientation of dendrites of nerve cells after impregnation was conducted according to Golgi. By means of a digitizer, a graphic drawing of the neurons was obtained.

Results

Morphometric investigation of dendrite geometry of giant multipolar neurons of nucleus reticularis giganto-cellularis of medulla oblongata did not reveal significant differences between space-flown and ground-based control animals. However, significant differences in the number and mean branching of dendrites between R+0 and R+9 rats suggested structural rearrangement of the dendrite tree of neurons that developed during and after flight. Comparison of those findings, along with the data obtained during similar studies in Cosmos-1667, Cosmos-1887, and Cosmos-2044 flights, helped identify time course variations of the dendrite tree of gigantic multipolar neurons of the reticular formation at different stages of animal adaptation to microgravity.

SLS1-29

Title of Study

Effects of Space Travel on Mammalian Gravity Receptors

Science Discipline

Neurophysiology

Investigator	Institute
Muriel D. Ross	NASA Ames Research Center

Co-Investigator(s)	Institute
None	

Research Subject(s)

Rattus norvegicus (Sprague-Dawley rat)

Flight: 20 Male

Ground-Based Controls

Basal: 20, Asynchronous: 40, Vivarium: 20

Key Flight Hardware

Ambient Temperature Recorder, Animal Enclosure Module, Research Animal Holding Facility

Objectives/Hypothesis

Previous research indicates that vestibular gravity sensors (maculas) are functionally specialized structures. There are two main interacting circuits: 1) type I macular sensory hair cells are part of the highly channeled (or direct) circuit; 2) type II macular hair cells sense, distribute, and modify information flowing through the system as part of the distributed modifying (or local) circuit. Based on their participation in local circuits, it was predicted that type II cells would show more synaptic changes in an altered gravitational environment than would type I cells.

Approach or Methods

Synapses were recorded from four sets of 50 serial thin sections from right maculas. Two consecutive series of 50 sections were obtained from the macula of one animal in each group to determine whether results would vary between the two sites. Only those synapses with an electron opaque central ribbon and a halo of vesicles were counted. Photographic mosaics were made of every seventh section for locating and numbering cell profiles accurately and to ensure that no synapses were counted twice. More than 6000 synapses in over 1000 utricular macular hair cells were analyzed.

Results

Increased numbers of hair cells in R+0 flight animals support the thesis that the local circuit is the more dynamic and would exhibit more change. Space flight appears to re-tune vestibular gravity sensors so that they can function in microgravity. The observed increments in pairs and groups of synaptic ribbons may increase the efficacy of the synaptic site in microgravity, that is, the addition of synaptic ribbons at a site increases the probability of release of transmitter substance, making the hairs more sensitive. If postflight stress was a factor, it acted selectively on neural elements of the local circuitry, which did not differ at R+ML. This is in contrast to findings at R+0, when both receptor hair cell types were affected.

Title of Study

Catecholamines, Vasopressin, Atrial Natriuretic Factor (ANF) and ANF Receptors in the Rat Brain

Science Discipline

Neurophysiology

Investigator	Institute
Claude Gharib	Centre National Recherche Scientifique

Co-Investigator(s)	Institute
Gabrion, Jacqueline	Centre National Recherche Scientifique
Pequignot, Jean-Marc	Centre National Recherche Scientifique

Research Subject(s)

Rattus norvegicus (Sprague-Dawley rat)

Flight: 14 Male

Ground-Based Controls

Delayed synchronous: 14, Vivarium: 28

Key Flight Hardware

Ambient Temperature Recorder, Animal Enclosure Module, Research Animal Holding Facility

Objectives/Hypothesis

Changes in blood volume during space flight have been related to modifications in fluid regulating hormones. This study was to evaluate the effect of space flight on the neurological basis of endocrine regulating factors. Catecholamines, vasopressin, atrial natriuretic factor (ANF), and ANF receptors were studied in the rat brain.

Approach or Methods

Brain stem noradrenergic cell groups (A1, A2, A5, and A6) were removed and supernatants were assayed for norepinephrine. Central tissues were analyzed by liquid chromatography and electrical detection. Vasopressin content in the hypothalamus and hypophysis was determined by radioimmunoassay. ANF-binding sites were studied with 125I-rANP and autoradiography.

Results

After flight, vasopressin was decreased in the hypothalamus and increased in the posterior pituitary. Norepinephrine was unchanged in the A2 and A5 groups. Norepinephrine content was decreased in the locus coeruleus (A6) but showed no change at R+9, indicating a stress reaction associated with landing. This stress effect may mask microgravity effects. Results also indicated an increase in binding sites in the choroid plexus after flight and a decreased affinity of meningial ANF receptors. These changes suggest that ANF may be involved in fluid electrolyte imbalances in the brain occurring during flight.

SLS1-31

Title of Study

ANP-Binding Sites in Brain After a Nine-Day Space Flight

Science Discipline

Neurophysiology

Investigator	Institute
Jacqueline B. Gabrion	Université de Montpellier

Co-Investigator(s)	Institute
Gharib, C.	Université de Lyon
Herbuté, S.	Université de Montpellier

Research Subject(s)

Rattus norvegicus (Sprague-Dawley rat)

Flight: 10 Male

Ground-Based Controls

Synchronous, Vivarium

Key Flight Hardware

Research Animal Holding Facility

Objectives/Hypothesis

Cerebrospinal fluid is mainly produced by choroidal cells in the brain and reabsorbed towards the blood at the level of meningia. In both cases, fluid transports are controlled by hormonal or neurotransmitters signals, acting through membrane receptors and stimulatory/inhibitory pathways. Among the hormonal signals, atrial natriuretic peptide (ANP) was well known to be involved in regulatory pathways in choroid plexus and meningia. As ANP levels in blood are changed during adaptation to space flight, it appeared interesting to evaluate the effects of a space flight on the ANP-binding sites in the rat brain.

Approach or Methods

Rat brains were removed after decapitation, frozen in liquid nitrogen, and shipped on dry ice to the lab, where they were stored at -80 °C until sectioning. Twenty-µm sections were incubated in increasing dilutions of radio-odinated ANP autoradiography, using image analysis and microdensitometry, assisted by the Optilab program on an Apple Mac II computer. Data were treated to obtain Scatchard's plots and statistical values.

Results

After quantification in choroid plexus and meningia of rats flown in space for 9 days, it was shown that ANP-binding sites were significantly increased in the choroid plexus of lateral and third ventricles of flight rats compared with ground control rats ($p < 0.01$ and $p < 0.05$, respectively). No significant differences in the binding affinity were observed at the level of these structures. Choroid plexus from the fourth ventricle did not display any changes in binding capacity and affinity after space flight. Meningia from the flight rats did not demonstrate any significant modifications of the number of ANP-binding sites but displayed a significant increase in Kd values (0.462 ± 0.062 vs. $0.102 \pm 0.045 \times 10\text{-}9M\text{-}1$, $p < 0.01$), which suggested a reduced affinity of the meningeal ANP receptors, after a 9-day space flight. The authors conclude that atrial natriuretic peptide might be involved in the regulation of fluid and electrolyte fluxes in the brain during adaptation to microgravity, through a modified expression of specific high-affinity receptors, mainly in choroid plexus from forebrain or in meningia.

Title of Study

Histologic Examination of Lung Tissue

Science Discipline

Pulmonary physiology

Investigator	Institute
John B. West	University of California, San Diego

Co-Investigator(s)	Institute
Mathieu-Costello, O.	University of California, San Diego
Elliott, Ann	University of California, San Diego

Research Subject(s)

Rattus norvegicus (Sprague-Dawley rat)

Flight: 19 Male

Ground-Based Controls

Basal: 10, Delayed synchronous basal: 10, Synchronous: 20, Delayed synchronous: 40

Key Flight Hardware

Ambient Temperature Recorder, Animal Enclosure Module, Research Animal Holding Facility

Objectives/Hypothesis

Limited information is available regarding the effect of microgravity on the lung, though several functional aspects of the respiratory system have been shown to be extremely sensitive to microgravity exposure. Human studies have shown a headward fluid shift during weightlessness. Pulmonary blood flow and alveolar ventilation become more uniform. It is hypothesized that exposure to changes in gravitational forces could potentially induce pathological changes in the lung related to abnormal lung fluid balance, altered pulmonary capillary hemodynamics, and possible pulmonary hypertension. The objective of this experiment is to examine the effects of microgravity exposure on lung ultrastructure and relate the changes in lung histology, if any, to alterations in lung physiology.

Approach or Methods

Lungs were removed from the animals within 10 minutes of decapitation. One lung from each animal was fixed in a glutaraldehyde fixative. Samples for electron microscopy were taken from the most ventral and dorsal aspects of a tissue slab cut perpendicular to the cranio-caudal axis of the lung. Tissue samples were rinsed overnight in 0.1 M phosphate buffer adjusted to 350 Osm, then dehydrated, rinsed, and embedded in Araldite. Sections were also cut from two tissue blocks selected randomly from each lung site (dorsal/ventral), stained, and examined by light microscopy. Ultrathin sections were examined with an electron microscope. Samples were examined for peribronchial cuffing of smaller pulmonary vessels, the presence of alveolar edema, and general appearance of the pulmonary capillaries and lung parenchyma. The ultrastructure of the blood-gas barrier was also examined by electron microscopy.

Results

Not available.

Title of Study

Tissue Fluid-Electrolyte Composition

Science Discipline

Renal, fluid, and electrolyte physiology

Investigator	Institute
Yuri V. Natochin	Institute of Evolutionary Physiology and Biochemistry

Co-Investigator(s)	Institute
Serova, Luba V.	Institute of Biomedical Problems
Shakhmatova, E.I.	Sechenov Institute
Lavrova, E.A.	Sechenov Institute
Snetkova, E.V.	Institute of Biomedical Problems
Ivanova, S.Y.	Institute of Biomedical Problems
Keil, Lanny C.	NASA Ames Research Center

Research Subject(s)

Rattus norvegicus (Sprague-Dawley rat)

Flight: 10 Male

Ground-Based Controls

Basal: 5, Vivarium: 10

Key Flight Hardware

Ambient Temperature Recorder, Animal Enclosure Module

Objectives/Hypothesis

Calcium loss that occurs in a prolonged space flight, negative calcium balance and continuous hypercalcemia have been serious problems related to long-duration space missions. This study was to accumulate new data about mechanisms of changes in fluid-electrolyte metabolism of mammals during space flight.

Approach or Methods

The samples studied included: the right lobe of liver, left kidney, heart from apex of ventricles, ventral skin, skeletal muscle from the right hamstring, and right humerus bone without marrow. Contents of water, sodium, potassium, calcium, magnesium, copper, zinc, and manganese were measured. Samples were weighed, put into quartz tubes, and dried at 105 °C to reach a constant weight in order to evaluate water content. The dried samples were ashed by concentrated nitric acid. Sodium and potassium were measured by means of a propane-air mixture; calcium and magnesium were measured in an atomic absorption spectrophotometer.

Results

Results indicate that fluid-electrolyte homeostasis of animal tissues remained stable immediately and 9 days after return to the Earth. The differences between the flight and control animals were insignificant and the changes detected were probably caused by water and electrolyte redistribution between various tissues and organs. A decrease in water and sodium content of the skin, as well as a decrease in the water, sodium, and potassium content of the heart was observed. No changes were observed in other tissues. The changes observed in SLS-1 rats were very close to those seen after a 7-day Cosmos-1667 flight and greater than those reported after 14-day Cosmos flights, reflecting what may be an acute stage of adaptation.

Title of Study

Histomorphometric Analysis of Bone Tissue after Weightlessness Exposure and Recovery

Science Discipline

Bone and calcium physiology

Investigator	Institute
Christian Alexandre	Laboratoire de Biologie du Tissu Osseux

Co-Investigator(s)	Institute
Vico, L.	Laboratoire de Biologie du Tissu Osseux
Lafage-Proust, M.H.	Laboratoire de Biologie du Tissu Osseux

Research Subject(s)

Rattus norvegicus (Sprague-Dawley rat)

Flight: 10 Male

Ground-Based Controls

Basal: 5, Synchronous: 10, Vivarium: 5

Key Flight Hardware

Research Animal Holding Facility

Objectives/Hypothesis

The characteristics of space flight-induced bone loss have been the subject of many studies. However, the mechanism of bone mass recovery on Earth is not well understood. Studies examining humans for up to 5 years after a Skylab mission showed that calcaneum bone mineral remained decreased. Additionally, rats from other missions showed incomplete bone mass recovery after a reambulation period longer than the flight itself. The purpose of this study was to examine histomorphometric changes of various bones after a 14-day exposure to weightlessness and after a 14-day recovery.

Approach or Methods

After an appropriate time period, the rats were euthanized and the skull, last thoracic vertebra, right humerus, right femur, and right tibia were removed and fixed. The length of each bone was measured using calipers. Bone mineral density was assessed using a dual-energy X-ray absorptiometry in the humerus, femur, and tibia. Using X-ray microanalysis, Ca^{2+} and P concentrations were measured in the cancellous and cortical portions of the tibia, vertebrae, and parietal bones. Histomorphometric analysis (producing measurements of bone-mass parameters, bone-architecture parameters, osteoblastic activity, and osteoclastic activity of the tibial and humeral metaphyses) was also performed.

Results

Flight animals examined immediately postflight (R+0) showed detectable bone loss in the femoral metaphysis/epiphysis when compared to the appropriate synchronous control group. Osteoclastic surfaces area and number of cells were much higher in tibial secondary spongiosa of R+0 animals, while osteoblastic parameters remained relatively unchanged. Ca^{2+} and P in R+0 animals were lower in tibia secondary spongiosa and higher in calvaria as compared to synchronous controls. Bone mineral density was decreased in R+14 animals relative to vivarium controls, suggesting that the effects of flight were somewhat delayed. However, bone mineral density was greater in R+14 animals relative to R+0 animals, suggesting an active recovery process. Furthermore, Ca^{2+} and P concentrations in tibia of R+14 animals remained below control levels after the reambulation process. Site to site differences were also observed. There were early and major changes in the tibia, less marked and delayed changes in the humerus, and minor changes in the greater trochanter of the femur.

Title of Study
Histomorphometric Study of SLS-2 Rat Tibia

Science Discipline
Bone and calcium physiology

Investigator	Institute
G.N. Durnova	Institute of Biomedical Problems

Co-Investigator(s)	Institute
Kaplansky, Alexander S.	Institute of Biomedical Problems

Research Subject(s)
Rattus norvegicus (Sprague-Dawley rat)
Flight: 15 Male

Ground-Based Controls
Basal: 5, Synchronous: 15

Key Flight Hardware
Research Animal Holding Facility

Objectives/Hypothesis
Previous flight experiments demonstrated reduction of trabecular bone caused by inhibited neoformation and enhanced resorption. However, it was difficult to determine what changes in spongy bone were caused by space flight and what were caused by the stress of returning to the Earth's gravity. The objective of this experiment was to differentiate bone changes caused by microgravity from those caused by re-entry factors.

Approach or Methods
Flight rats were divided into three groups, with five dissected on flight day 13, 5 dissected 6 hours after flight (F+0), and five dissected 14 days after flight (F+14); ground control rats were dissected simultaneously with corresponding flight groups. Proximal metaphyses of tibiae were fixed in 4% paraformaldehyde, dehydrated, and embedded in a mixture of methylmetacrylate and JB-4. Sections (5 mm thickness) were cut with a Polycut S microtome. Sections for histomorphometric study of bone mass parameters and osteoid surface were stained using a trichrome method of Gomori as modified by Villanueva. Osteoclasts were identified using tartrate-resistant acid phosphatase activity. Histomorphometric measurements of spongy bone of tibiae were performed using image analyzer MOP-VIDEOPLAN. The following parameters were determined: growth plate height, primary thickness, trabecular bone volume, trabecular number, trabecular thickness, trabecular separations in the primary and secondary spongiosa, osteoid surface, and osteoclast surface.

Results
No changes were seen in the growth plate and primary spongiosa parameters of IF rats; however, F+0 rats sacrificed 6 hours after flight had significantly lower values of these parameters. In the secondary spongiosa of tibiae, bone volume was decreased by 22% and by 35% in IF and F+0 rats; this was associated with a reduction of trabecular number. Osteoid surface in IF and F+0 rats was significantly lower, and osteoclast resorption surface showed greater values than ground control rats. In F+0 rats the signs of tibial osteopenia were more evident than in IF rats; this could be due to increased resorption under the influence of an acute gravitational stress. The flight-induced changes in tibiae were reversible, and after 14 days of recovery, most of the parameters returned to control levels.

Title of Study

Bone, Calcium, and Space Flight

Science Discipline

Bone and calcium physiology

Investigator	Institute
Emily R. Morey-Holton	NASA Ames Research Center

Co-Investigator(s)	Institute
Doty, Stephen B.	Columbia University
Roberts, W. Eugene	Indiana University
Vailas, Arthur C.	University of Wisconsin, Madison
Cann, Christopher E.	University of California, San Francisco

Research Subject(s)

Rattus norvegicus (Sprague-Dawley rat)

Flight: 12 Male

Ground-Based Controls

Basal: 6, Synchronous: 12, Vivarium: 12

Key Flight Hardware

Research Animal Holding Facility

Objectives/Hypothesis

The objectives of this experiment were: 1) to determine if exposure to microgravity causes a significant decrease in bone mineralization at the outer surface of limb bones within the first week of flight and to assess those bone parameters causing or affected by this decrease; 2) to measure activity of osteoblast immediately postflight; 3) to determine if bone mineralization is restored following 2 weeks of recovery from space flight; 4) to determine total skeletal and site-specific bone mineralization rates, mineralization and resorption, as well as calcium absorption and excretion; 5) to relate effects of microgravity on bone to changes in calcium metabolism; and 6) to determine gut and renal responses during postflight recovery period.

Approach or Methods

Body mass, blood pH, and urine volume were measured. Upon sacrifice, the vertebrae, maxillae, tibias, femurs, humeri, calvaria were removed and processed. Bone samples were analyzed for bone mineralization rates, alkaline phosphatase activity, bone dimensions, osteoblast populations, matrix and mineral content, and biomechanics. Ca and crosslink content was determined for the urine as well as bone samples. Bone samples were also analyzed under electron microscopy and 3-D X-ray topographic microscopic images.

Results

Ionic calcium and pH were similar in all groups at the end of the flight period, suggesting that any changes induced by flight had returned to normal prior to the time that the animals were sacrificed. All groups had similar bone length in both front and hindlimbs as well as in the jaw. Bone mineralization on the periosteal surface at the tibiofibular junction was suppressed in the flight rats during the flight period and did not return to normal until the second week of the recovery period. Alkaline phosphatase activity, a marker of bone matrix maturation, was suppressed in the endosteal osteoblast immediately postflight and at 2 weeks post-recovery. This data suggest that bone response to unloading and reloading may be different at different bone sites. Urinary collagen crosslinks were slightly decreased following flight, suggesting that resorption was not dramatically effected during the recovery period. Surprisingly, very few significant changes in bone were noted in these very young, rapidly growing rats (38 days old at launch).

SLS2-4

Title of Study

Bone Minerals and Morphological and Functional Changes

Science Discipline

Bone and calcium physiology

Investigator	Institute
Victor S. Oganov	State Scientific Center, Institute of Biomedical Problems

Co-Investigator(s)	Institute
Rodionova, N.V.	Institute of Zoology of Ukraine National Academy of Sciences, Ukraine
Kabitskaya, Olga E.	Institute of Biomedical Problems

Research Subject(s)

Rattus norvegicus (Sprague-Dawley rat)

Flight: 16 Male

Ground-Based Controls

Basal: 5, Synchronous: 13

Key Flight Hardware

Research Animal Holding Facility

Objectives/Hypothesis

Observations made on humans during manned flights on spacecraft and orbital stations, as well as on animals flown on biological satellites, have not yet provided an adequate knowledge of mechanisms underlying musculoskeletal changes in space. However, recent data about bone response to microgravity point to several typical changes, such as inhibited bone formation and enhanced osteoporosis, reduced mineral density, and lowered mechanical strength. The purpose of this present study was to investigate the effects of a 14-day exposure of rats to microgravity on spongy bone cells and bone properties as a composition material and to discriminate between the changes caused by gravity from the changes associated with short-term readaptation after return to Earth.

Approach or Methods

Tibia fragments were obtained from rats. Fragments were then massed. Bone density was evaluated on the basis of mass measurement in air and distilled water. Some fragments were placed in a muffle furnace for analysis of ash content. Fragments were then analyzed histologically and under electron microscopy. Morphometric measurements were made using a computer-aided test-point counting method.

Results

The bone density of the tibial distal epiphyses shows a decrease in animals recovered immediately after flight (R+0) and those recovered 14 days later (R+14) when compared to the appropriate controls. The density of the tibial proximal segment of animals sacrificed inflight (IF) did not differ from the controls. The bone porosity of distal epiphyses of R+0 and IF rats was significantly higher than their respective controls. After flight, ash content of the tibial fragments decreased significantly. After 14 days of readaptation (R+14), bone porosity and ash content were not significantly different from the controls. Histological studies showing shorter bone trabecules and decrease in the number of osteoblasts in spongy bone reveal osteoporosis type changes in R+0 animals when compared to controls. Flight rats had a more homogeneous osteoblast population, indicating non-optimal osteogenesis. Additionally, osteoclastic density was increased in flight rats.

Title of Study

Bone Cell Activity during Space Flight and Recovery

Science Discipline

Bone and calcium physiology

Investigator	Institute
Erik Zerath	Centre d'Etudes et de Recherches de Medecine Aerospatiale

Co-Investigator(s)	Institute
Marie, Pierre J.	INSERM

Research Subject(s)

Rattus norvegicus (Sprague-Dawley rat)

Flight: 10 Male

Ground-Based Controls

Basal: 5, Synchronous: 10, Vivarium: 5

Key Flight Hardware

Research Animal Holding Facility

Objectives/Hypothesis

Microgravity associated with space flight has been shown in numerous experiments to be associated with marked skeletal changes. However, little attention has been given to bone tissue recovery that follows space flight after return to Earth's gravity. In addition, how microgravity affects bone metabolism at the cell level has only been assessed by histological techniques: studies of osteoblastic cell number and differentiation in space flight animals have not been performed. This study investigated the effects of microgravity and subsequent recovery on trabecular bone morphology and compared histomorphometric parameters on caudal vertebrae with the behavior of vertebral osteoblastic cells in culture.

Approach or Methods

Histomorphometric measurements were made on caudal vertebrae, thoracic vertebrae, and the left humeri. Lengths, volumes, and wet weights were measured. Trabecular volume, thickness, and spacing were measured using vertebral bodies and humeral metaphyses. Osteoid thickness was measured. Osteoid, osteoblast, and osteoclast surfaces were measured. Caudal vertebral bone cells were isolated and cultured. Cultures were evaluated for cell growth and phenotype. Cell alkaline phosphatase activity (ALP) and osteocalcin production, two parameters of osteoblast differentiation, were determined in confluent cells isolated from the caudal vertebrae.

Results

Humeral weight and length showed normal growth during the experiment and were unaffected by space flight or recovery from space flight. However, space flight resulted in inhibition of static indexes of bone formation in humeral proximal metaphyses and thoracic vertebral bodies. This was associated with a decrease in bone volume in humeral metaphyses. After 14 days of recovery on Earth, osteoblastic and osteoid surfaces returned toward normal and bone volume was normalized in humeri, whereas the static bone formation parameters were not restored on thoracic vertebrae. In addition, histological indexes of bone formation and osteoblastic cell growth *in vitro* were not affected by space flight in caudal vertebrae. The rat humeri and thoracic and caudal vertebrae exhibit different patterns of response to space flight and subsequent return to Earth, which could be due, at least in part, to the different loading pattern of these bones, and to differences in bone turnover rate.

Title of Study

ANP, Pro-ANP and mRNA Distribution in Rat Heart during a Space Flight

Science Discipline

Cardiovascular physiology

Investigator	Institute
Claude Gharib	Université de Lyon

Co-Investigator(s)	Institute
Gabrion, J	Centre National Recherche Scientifique, Paris
Fagette, S.	Université de Lyon
Fareh, J.	Université de Lyon
Gauquelin, G.	Université Claude-Bernard
Somody, L.	Université de Lyon
Koubi, H.	Centre National Recherche Scientifique, Lyon
Viso, M.	Centre National d'Etudes Spatiales

Research Subject(s)

Rattus norvegicus (Sprague-Dawley rat)

Flight: 15 Male

Ground-Based Controls

Asynchronous tail suspension: 40, Vivarium: 15

Key Flight Hardware

Research Animal Holding Facility

Objectives/Hypothesis

Previous studies show that space flight induces a wide variety of changes in biological systems, including the cardiovascular and neuroendocrine systems. Cardiovascular deconditioning occurs upon return to Earth. The regulation of blood pressure is partially carried out by the noradrenergic cells groups of the brain. However, the involvement of these systems is still unknown. Data provided by SLS-1 experiments on central and peripheral catecholamines could be the result of acute stress occurring in the animals. The purpose of this experiment is to re-evaluate the data retrieved from SLS-1 and compare these data with those obtained in simulated microgravity experiments (hindlimb-suspended rats).

Approach or Methods

The flight and control groups were divided into two groups: one group examined upon recovery (R+0) and the other 9 days later (R+9). For the ground-based simulation experiment, the tail-suspended and control animals were divided into analogous groups. Rats were anesthetized with metofane and blood was taken through cardiocentesis. The animals were then sacrificed by decapitation. The brain, kidneys, and heart were removed and prepared for analysis. Thick serial frontal sections were taken to analyze the noradrenergic cell groups (A1, A2, A5, and A6) of the central nervous system. Brain and peripheral tissue samples were treated with perchloric acid. The brain and tissue extraces were analyzed with liquid chromatography for norepinephrine (NE) content. The protein content of peripheral tissues was measured with the Bradford method.

Results

There was no significant difference of the norepinephrine (NE) contents in the A1, A2, A5, and A6 cell groups between the flight and vivarium control groups. In the peripheral noradrenergic system, neither the cardiac atria and ventricles nor kidneys showed significant differences after space flight. The tail-suspended group, when compared to controls, showed similar results. In the central nervous system, there was no significant difference between the NE levels in the A1, A2, A5, and A6 groups. In the peripheral noradrenergic system, neither the cardiac atria and ventricles nor kidneys showed significant differences after tail suspension.

Title of Study

Morphological Analysis of Pituitary Somatotrophs of SLS-1 and SLS-2 Rats

Science Discipline

Endocrinology

Investigator	Institute
E.I. Alekseev	Institute of Biomedical Problems

Co-Investigator(s)	Institute
None	

Research Subject(s)

Rattus norvegicus (Sprague-Dawley rat)

Flight: 16 Male

Ground-Based Controls

Basal: 5, Synchronous: 16

Key Flight Hardware

Research Animal Holding Facility

Objectives/Hypothesis

In order to gain a better understanding of the mechanisms involved in metabolic disorders in response to microgravity, it is important to study the somatotrophic function of the pituitary gland controlling growth and anabolic processes in mammals. Previous inflight experiments have shown a progressive minimization of endocrine regulatory function and inhibition of growth hormone (GH) production and secretion with increased flight time. The objective of this study was to determine the histological and cytokaryometric changes in the somatotroph cells of rats flown on SLS-2.

Approach or Methods

Pituitary glands were fixed in Bouin's fixative and embedded in paraffin. Horizontal 4-mm-thick sections were stained with paraldehyde fuchsin and Halmi's mixture to identify both basophilic cells and somatotrophs. The major ingredient of Halmi's mixture selectively stains pituitary somatotroph cells. Cytokaryometric examination of somatotroph cells was performed. In the pituitary of each flight and control rat, 100 somatotroph cells and their nuclei located along capillaries and between capillaries in glandular areas were outlined. Diameters and volumes of the cells and their nuclei were measured and statistically treated by means of routine morphometric methods. Somatotrophic cell status was determined from cytokaryometric data and visual evaluation of growth hormone in the cytoplasm.

Results

Pituitary glands of rats sacrificed 5 hours after space flight had a greater GH concentration than those of the controls. The pericapillary somatotroph cells had a high GH concentration but no change in cell size, while intervascular glandular somatotroph cells had a low GH concentration and a smaller cell size. Both populations exhibited drastically reduced and dense maculae. These observations indicate that space flight diminishes the function of somatotroph cells. During readaptation to 1 G, the secretory and biosynthetic function of the cells recovered and their activity returned to normal.

SLS2-8

Title of Study

Functional State of Thyroid and Calcitonin-Producing System of Rat Thyroid Gland in Microgravity

Science Discipline

Endocrinology

Investigator	Institute
V.I. Loginov	Institute of Biomedical Problems

Co-Investigator(s)	Institute
None	

Research Subject(s)

Rattus norvegicus (Sprague-Dawley rat)

Flight: 16 Male

Ground-Based Controls

Basal: 5, Synchronous: 16

Key Flight Hardware

Research Animal Holding Facility

Objectives/Hypothesis

Previous experiments on SLS-1 and Cosmos missions have indicated that microgravity causes activity of the thyroid gland and the thyroid parenchyma to decrease. These studies have also shown the quantity and activity of calcitonin-producing cells (C-cells) to decrease. The purpose of this experiment was to perform histological and immunocytochemical examinations of thyroid glands from rats sacrificed both during and after space flight. This is necessary to differentiate thyroid changes produced by microgravity from changes produced from the stress of the return to the Earth's gravitational field.

Approach or Methods

Thyroid glands were fixed in Bouin's fixative and embedded in Histoplast. Horizontal sections were stained with hematoxylin and eosin. Thyroid sections were also stained to measure iodinated thyroglobulins in follicular colloid. Iodinated thyroglobulins were colored blue, and non-iodinated thyroglobulins were colored yellow. Thyroid function was evaluated in terms of the follicular epithelium height, thyrocyte nuclear volume, and percentage of follicles stained yellow, yellow-blue, or blue in thyroid sections. An immunoperoxidase technique with avidin-biotin complex was used to provide immunocytochemical detection of C-cells. The size, nuclear volume, and total number of C-cells were determined. Percentages of C-cells in active state (type 1), in synthesis and hormone accumulation state (type 2), and in active calcitonin secretion (type 3) were also determined.

Results

Histological examinations showed a lower follicular epithelium height and a smaller number of resorption vacuoli in the colloid, indicating inhibition of resorption activity in the thyroid parenchyma. A smaller size of thyrocyte nuclei indicated an inhibition of their synthetic activity. Resorption disorders were predominant in thyroid glands of flight animals as seen by their enlarged follicular lumen filled with a dense stratified colloid. The number of type 3 C-cells was decreased, indicating a decrease in secretion activity of C-cell populations. A significant reduction in the size of C-cells and their nuclei suggests an inhibition of biosynthesis. Observations give evidence that C-cells developed hypotrophy, and secretory and biosynthetic activity declined in microgravity. By 14 days after recovery, functional activity of the cells had returned to normal.

Title of Study

Regulation of Blood Volume during Space Flight

Science Discipline

Hematology

Investigator	Institute
Clarence P. Alfrey	Methodist Hospital

Co-Investigator(s)	Institute
Driscoll, Theda	Baylor College of Medicine
Nachtman, Ron G.	Krug International
Udden, Mark M.	Baylor College of Medicine

Research Subject(s)

Rattus norvegicus (Sprague-Dawley rat)

Flight: 15 Male

Ground-Based Controls

Synchronous: 15, Vivarium: 10

Key Flight Hardware

Research Animal Holding Facility

Objectives/Hypothesis

Human adaptation to space flight is accompanied by a loss of red blood cell mass (RBCM), a loss of plasma volume (PV), and a decrease in total blood volume. This leads to a decrease in gravity-dependent space below the heart. In this study, rats were examined to determine whether similar hemodynamic changes occur, making them a suitable subject for study. SLS-1 marked the first time PV and RBCM was measured pre- and postflight. SLS-2 allowed for repeat determinations and the first opportunity for inflight assessment of erythropoiesis. An additional inflight experiment tested the ability of the rat bone marrow to respond to a bolus of erythropoietin, the major hormone controlling erythropoiesis in animals and man.

Approach or Methods

Seven days prior to launch, PV and RBCM was determined by isotopic dilution of ^{125}I labeled albumin and ^{51}Cr labeled red blood cells, respectively. On flight day 6, five rats (group A) were given ^{125}I labeled albumin and ^{59}Fe injections. Samples were taken 10 minutes later to determine PV. Samples to determine ^{59}Fe incorporation into RBCs were taken 24 hours later and on landing day (9 days later). The remaining 10 rats (group B and C) were given ^{59}Fe injections on flight day 9. Group B was also given a 200 U injection of erythropoietin at this time. Five rats were dissected on flight day 13. Upon landing, RBCM and PV was measured for all flight rats and ground controls. ^{59}Fe incorporation into red blood cells was also determined.

Results

RBCM showed an increase in both the space flight animals and ground control animals but less of an increase in flight animals. When this increase was normalized for growth (flight animals had a lower growth rate than ground controls), a decrease was seen in the RBCM of the flight animals. Plasma volume increased in both flight and ground control animals. The PV increase was greater in ground control animals although not statistically different. Incorporation of ^{59}Fe was lower in flight animals but again not statistically different. Animals that received erythropoietin injections had higher levels of iron incorporation. Incorporation was not statistically significant, indicating erythropoiesis is stimulated normally under conditions of microgravity.

SLS2-10

Title of Study

Regulation of Erythropoiesis during Space Flight

Science Discipline

Hematology

Investigator	Institute
Albert T. Ichiki	University of Tennessee

Co-Investigator(s)	Institute
Jones, J.B.	University of Georgia

Research Subject(s)

Rattus norvegicus (Sprague-Dawley rat)

Flight: 21 Male

Ground-Based Controls

Synchronous: 21

Key Flight Hardware

Research Animal Holding Facility

Objectives/Hypothesis

Experimental results from SLS-1 showed a decrease in the number of Epo-responsive total bone marrow progenitors in flight rats compared to the ground controls. SLS-2 allowed further investigations into this study with the addition of two features: the injection of recombinant human Epo (rhEpo) to examine its effect on progenitor cells in microgravity and the inflight collection of samples. The objective was to assess peripheral blood and bone marrow erythroid parameters.

Approach or Methods

Flight animals were divided into four groups: 1) group A (n=5) was used to collect blood; 2) group B (n=5) was injected with recombinant human erythropoietin (rhEpo); 3) group C (n=5) received saline as a control; and 4) group D (n=5) was sacrificed inflight. Blood samples were taken at scheduled times from the tail vein. Automated blood cell counts were performed twice, and results were averaged for each sample. Reticulocytes were counted both manually from slides and by flow cytometry. Erythroid cultures were assayed with various combinations of rhEpo and in the absence of rhEpo. A 200-cell differential count was performed on bone marrow smears. On dissection days, cardiocentesis was performed and serum was sampled. Epo was measured using commercial radioimmunoassay kits.

Results

No significant changes were seen in peripheral blood erythroid elements. Nonadherent bone marrow cells taken from rats on flight day 13 had a lower number of recombinant rat interleukin-3 (rrIL-3)-responsive cells and a lower number of rrIL-3 plus rhEpo-responsive blast-forming unit erythroid (BFU-e) colonies than ground controls. There was a slight increase in the number of rhEpo plus rrIL-3 responsive BFU-e colonies on landing day. Flight rats stimulated with rhEpo or rhEpo plus rrIL-3 showed an increase in the number of erythroid colony-forming units and a decrease in BFU-e colonies 9 days after flight. Results indicate that space flight affects rat bone marrow progenitor cells but has little effect on peripheral blood erythroid parameters.

Title of Study

Effect of SLS-2 Space Flight on Immunological Parameters of Rats: Immunity Mediators

Science Discipline

Immunology

Investigator	Institute
Irina V. Konstantinova	Institute of Biomedical Problems

Co-Investigator(s)	Institute
Lesnyak, A.T.	Institute of Biomedical Problems

Research Subject(s)

Rattus norvegicus (Sprague-Dawley rat)

Flight: 16 Male

Ground-Based Controls

Basal: 5, Synchronous: 16, Vivarium: 5

Key Flight Hardware

Research Animal Holding Facility

Objectives/Hypothesis

Exposure of animals and humans to microgravity causes immune alterations detected immediately after flight. Immune changes mainly consist of decreases in the proliferative activity of T lymphocytes, cytotoxic activity of natural killer cells, and production of cytokines. This experiment studied the effects of space flight on the kinetics of lymphocyte proliferation, the activity of natural killer cells, and the production of cytokines such as interleukin-1, interleukin-2, interferon-α, interferon-γ, tumor necrosis factor-α, and tumor necrosis factor-β. Dissections performed in space during SLS-2 removed the need to consider landing stresses.

Approach or Methods

Spleen and bone marrow cells were used for the study. Lymphocyte proliferation activity and natural killer cytotoxicity were measured using RPMI-1640 medium. Proliferative activity of concanavalin A, phytohemagglutinin, and interleukin-2-stimulated spleen T-cells was measured in terms of DNA synthesis after 48, 72, and 96 hours of cultivation. Activity of natural killer cells found in spleen and bone marrow was assayed in YAC-1 and K-562 cultured target cells labeled with ^{51}Cr and heavy uridine. Cytokines were assessed in supernatant fluids of cultivated spleen and bone marrow cells. Interferon activity was measured in cultured murine L cells by determining suppression of the cytopathic effect of murine encephalomyocarditis virus. Tumor necrosis factors were measured by determining their cytopathic effect on L929 cells.

Results

T lymphocyte activity of rats dissected in space flight was significantly decreased compared to controls. Cell proliferation rate in rats dissected immediately after landing did not decrease, whereas that in rats dissected at R+14 showed an increase. Activity of spleen natural killer cells was reduced in response to ^{51}Cr-labeled target cells during and after flight. At R+14, their activity returned to normal. In bone marrow, the activity of natural killer cells did not vary significantly. The production of IL-1, IL-2, and tumor necrosis factors alpha and beta in spleen cell cultures of the flight rats was reduced. At R+0, interferon alpha and gamma levels were diminished. Cell-mediated immunity in rats was significantly suppressed during flight. The time course variation of immune parameters after flight suggests that the changes may truly indicate a response of the immune system to space flight conditions that could increase over time.

SLS2-12

Title of Study

The Stressogenic Effect of Microgravity: Biochemical Studies

Science Discipline

Metabolism and nutrition

Investigator	Institute
Alexander S. Kaplansky	Institute of Biomedical Problems

Co-Investigator(s)	Institute
Popova, I.A.	Institute of Biomedical Problems
Durnova, G.N.	Institute of Biomedical Problems

Research Subject(s)

Rattus norvegicus (Sprague-Dawley rat)

Flight: 16 Male

Ground-Based Controls

Basal: 5, Synchronous: 16, Vivarium: 5

Key Flight Hardware

Research Animal Holding Facility

Objectives/Hypothesis

The question of whether microgravity has a stressogenic effect on mammals still remains open, since morphological and biochemical manifestations of an acute gravitational stress detected in rats after flight can mask changes induced by space flight factors, including microgravity. This experiment will examine the sole effects of microgravity stress through dissection of the adrenal and thymus glands midflight. After flight, stress will be evaluated through histological and histomorphometric analysis of the glandular tissues.

Approach or Methods

Ground control rats were dissected simultaneously with corresponding flight groups. The left adrenal and thymus were dissected, weighed, fixed, and sectioned. Serial adrenal and thymus sections were stained and examined histologically and histomorphometrically. The following parameters were analyzed in the central adrenal sections: total adrenal area; cortical and medullary areas; ratio of the cortical area to the medullary glomerular area; areas of the reticular zones of cortex; and size of cellular nuclei of the fascicular zone of the cortical and medullary portions. The thymus was examined histologically and histomorphometrically. The right adrenals were weighed and analyzed for lipid composition with thin-layer silica gel chromatography. In chromatograms, free fatty acids (FFA), triglycerides (TG), phospholipids (PL), free cholesterol (FCS), and cholesterol esters (CHE) were measured in absolute numbers and as a percentage of total lipids.

Results

In rats dissected inflight (IF), adrenal area, areas of adrenal cortex and medulla, the ratio of cortical and medullary areas, the relation of individual regions of cortex, and sizes of nuclei in cells of the fascicular regions in cortex and medulla were equal to their values in the ground control. Some increase was found in the number of dividing thymocytes in the thymus of IF rats. Yet, F+0 rats exhibited signs of moderately expressed acute stress reaction in adrenal and thymus. In F+0 rats, hypertrophy of adrenals with an expansion of the fascicular region in the adrenal cortex and enlargement of nuclei of its cells was found. Sites of depositing free and phagocyted nuclear detritus and depression of mitotic activity of thymocytes were seen in the thymus cortex. Lipid analysis showed that IF rats, sacrificed during flight, had decreased total lipids, FFA, TG, and FCS.

Title of Study

Influence of Microgravity on Rat Digestive Physiology and Xenobiotics Metabolizing System: Interactions with Intestinal Microflora Alterations

Science Discipline

Metabolism and nutrition

Investigator	Institute
Odette Szylit	National Institute for Agronomic Research

Co-Investigator(s)	Institute
Rabot, S.	National Institute for Agronomic Research
Nugon-Bauden, L.	National Institute for Agronomic Research
Meslin, J.-C.	National Institute for Agronomic Research

Research Subject(s)

Rattus norvegicus (Sprague-Dawley rat)

Flight: 12 Male

Ground-Based Controls

Synchronous: 6

Key Flight Hardware

Research Animal Holding Facility

Objectives/Hypothesis

Intestinal microflora possess an extremely versatile enzymatic potential that can interact directly or via its products with the overall body physiology. Space flight conditions, which are known to generate modifications of the gastrointestinal and hepatic functions, may also alter functions of the digestive microflora. The objective of this work was to assess the influence of a 14-day space flight on several parameters of digestive physiology and microbial fermentation.

Approach or Methods

Rats were killed by decapitation. The cecal content, the mucosa of the small intestine and the colon, and the right lobe of the liver were immediately collected and stored under appropriate frozen conditions until analyses. In the cecum, pH was measured and short-chain fatty acids (SCFA), ammonia, urea, and histamine were assayed. The concentration of total cytochrome P-450 (CYP450) was determined in liver microsomes. Glutathione-S-transferase (GST) activity was assayed in both microsomal and cytosolic fractions of the liver and the small intestine. In the colonic mucosa, variations of the number of neutral, acid, and sulfated mucus-containing cells (MCC) were investigated.

Results

The 14-day space flight induced a slight acidification of the cecal content ($p < 0.05$) and a 60% decrease of cecal SCFA concentration ($p < 0.05$). Among SCFA, acetate greatly increased (+14%) at the expense of butyrate (-7%) and cumulated valerate, caproate, and isoacids (-7%), whereas propionate remained stable. Cecal ammonia, urea, and histamine were not modified. Space flight did not alter GST activity either in the small intestine or in the liver, whereas concentration of hepatic CYP450 was significantly lowered ($p < 0.05$). In the colon, space flight led to a 20% reduction of the number of neutral MCC ($p < 0.05$). Microgravity temporarily affected the microbial fermentation and the histochemical structure of the mucosa in the large intestine, since modifications occurring in the flight (RF) group were not observed in the R+14 group, i.e. at the end of the 14-day recovery period. On the contrary, the decrease of hepatic CYP450 observed in RF rats persisted in the R+14 group. These findings, together with those obtained in a previous flight (SLS-1), should help to predict the alterations of digestive physiology likely to occur in astronauts and suggest that microgravity may durably disturb host responses to toxics and drugs.

Title of Study

Effects of Zero Gravity Exposure on Biochemical and Metabolic Properties of Skeletal Muscle

Science Discipline

Muscle physiology

Investigator	Institute
Kenneth M. Baldwin	University of California, Irvine

Co-Investigator(s)	Institute
Ciaozzo, Vince	University of California, Irvine

Research Subject(s)

Rattus norvegicus (Sprague-Dawley rat)
Flight: 15 Male

Ground-Based Controls

Asynchronous: 10, Vivarium: 15

Key Flight Hardware

Research Animal Holding Facility

Objectives/Hypothesis

Exposure to microgravity causes mechanical unloading of skeletal muscles. It is this unloading that is thought to play a major role in producing a loss in muscle mass and other phenotypic alterations. Given the lack of data regarding the influence of space flight in muscle function, it is important that these earlier observations be confirmed and that the effects of longer space flight missions be studied. The influence of microgravity on myosin heavy chain (MHC) and mRNA isoform expression also remains relatively unexplored. This study examined the effects of microgravity on the contractile properties of the soleus, an antigravity skeletal muscle, and the MHC protein and mRNA isoform content of the soleus, vastus intermedius, plantaris, and tibialis anterior muscles.

Approach or Methods

Approximately 4 hours after landing, the hindlimb musculature of the first flight animal was isolated and *in situ* contractile measurements were made on the soleus muscle. Upon completion, the left and right soleus, vastus intermedius, plantaris, and tibialis anterior muscles were removed and weighed. Samples from these muscles were used in the following procedures. Immunohistochemical analyses were performed, determining the presence of slow and fast MHC isoforms using two different monoclonal antibodies. Isolation and purification of myofibrils were performed. MHC isoforms were separated electrophoretically. Total cellular RNA was isolated from skeletal muscle. Northern blots were run, dried, and used for subsequent hybridization with a probe for MHC isoform mRNA.

Results

Microgravity had the greatest effect on muscle fiber composition in the soleus muscle, with a reduction in slow muscle fibers and an increase in hybrid fibers. There were significant decreases in slow type I protein isoforms and increases in fast type IIX MHC protein isoforms of the soleus and the vastus intermedius muscles. Consistent with this data was an increase in the type IIX MHC mRNA isoform. In contrast, the plantaris and tibialis anterior muscles showed increases in fast type IIB MHC mRNA isoforms without a corresponding increase in the protein content. The force-velocity relationships of the flight soleus muscle had a significant reduction in maximal isometric tension and a corresponding increase in maximal shortening velocity.

Title of Study

Morphological Investigations of Skeletal Muscles of SLS-2

Science Discipline

Muscle physiology

Investigator	Institute
E.I. Ilyina-Kakueva	Institute of Biomedical Problems

Co-Investigator(s)	Institute
Pozdnyakov, O.M.	Institute of General Pathology and Pathophysiology

Research Subject(s)

Rattus norvegicus (Sprague-Dawley rat)

Flight: 16 Male

Ground-Based Controls

Basal: 5, Synchronous: 16, Vivarium: 5

Key Flight Hardware

Research Animal Holding Facility

Objectives/Hypothesis

A large body of data available today indicates that the lack of static loads and a reduction of dynamic loads on the musculoskeletal apparatus in microgravity causes muscle atrophy. Red muscles, such as the soleus and adductor longus, showed more significant changes. Upon returning to Earth, though, the two muscles developed hemodynamic disorders that led to interstitial edema and death of myofibers. It was difficult to identify microgravity-induced changes because of the modifications associated with recovery and gravitational stress. This experiment examined the changes in muscles caused by microgravity through dissection of rat subjects midflight.

Approach or Methods

The soleus and gastrocnemius muscles were dissected and fixed. For histological examination, muscles were sectioned and stained with hematoxyline-eosine, iron hematoxyline, and nigrosine and impregnated with silver. Gastrocnemium samples were stained to differentiate myofiber types. Morphometric measurement of the cross-sectional area (CSA) of myofibers of various types in the gastrocnemius sample was performed. Morphometric analysis of myofibers of the soleus was conducted on hematoxyline-eosine sections, without reference to myofiber types. Nigrosine and iron hematoxyline sections were used to count the total number of capillaries and the number of functioning capillaries per 100 fibers. Samples were also analyzed using electron microscopy.

Results

Histological analysis of the soleus of rats dissected inflight (IF) and on recovery (R+0) revealed a small number of atrophied triangle-shaped, gigantic round-shaped, and split myofibers. Histological examination of the soleus of rats dissected 14 days after recovery (R+14) showed sites of repaired myofibers with clusters of small newly formed fibers and a host of splitting myofibers giving rise to new fibers. Histological analysis of the gastrocnemius muscle did not reveal any significant differences between flight and control groups. Morphometric analysis revealed that muscle fiber CSA in IF and R+0 rats in the soleus was approximately 50% that of controls and in the gastrocnemius was reduced by 11% to 22%. Electron microscopic analysis of the soleus and gastrocnemius revealed changes indicating atrophy. Differences in the gastrocnemius were less expressed than in the soleus.

Title of Study

Morphological and Functional Adaptations of Muscle Fibers Muscle-Tendon and Nerve-Muscle Junctions to Space Flights

Science Discipline

Muscle physiology

Investigator	Institute
Jean-François Marini	Université de Nice; Centre National Recherche Scientifique

Co-Investigator(s)	Institute
Carnino, Alain	Centre National Recherche Scientifique, Marseille
Zamora, Alfredo J.	Centre National Recherche Scientifique; INSERM Marseille

Research Subject(s)

Rattus norvegicus (Sprague-Dawley rat)

Flight: 5 Male

Ground-Based Controls

Basal: 5, Tail-suspension: 6, Vivarium: 5

Key Flight Hardware

Research Animal Holding Facility

Objectives/Hypothesis

Most of the generated myofilament contractile forces are transmitted from the skeletal muscle fibers to the tendon collagen fibers, across the plasma membrane, via the myotendinous junction (MTJ). The structure of this specialized region at the endings of the muscle fibers depends on the mechanical constraints imposed on muscle. Previous studies have shown ultrastructural MTJ modifications caused by an increase or a decrease in muscle-loading. This study compares the respective effects on MTJ ultrastructure of 8, 18, 29 days of hindlimb suspension and 14 days of microgravity exposure or 14 days of confinement.

Approach or Methods

Ground simulation of microgravity was obtained by suspending animals by their tails, making the hindlimbs neither active nor weight bearing (hindlimb suspension: HS). After different HS durations, the region of the distal MTJ was removed from both the soleus and plantaris muscles in the HS controls, confinement controls, and space flight animals. All muscles were fixed in a glutaraldehyde solution, then post-fixed, dehydrated, and embedded in epoxy resin. Ultrathin sections were cut, stained with uranyle acetate and lead citrate, and examined using an electron microscope.

Results

The first morphological modifications in the hindlimb suspension group were seen after 18 days on the soleus muscle, an antigravity postural muscle. Twenty-nine days of hindlimb suspension showed profound morphological and cytoarchitectural modifications and degenerative changes. The animals that experienced 14 days of microgravity showed greater morphological and cytoarchitectural modifications than did the 18-day hindlimb suspension group. The muscle fibers endings presented longer and thinner finger-like processes than controls. Numerous caveolae and subplasmalemmal vacuoles evidenced the intense membrane remodelling at MTJ. An histomorphometric quantification showed a 60% increase in the length of this interface between muscle fiber and tendon after the 14-day space flight. The morphological modifications of the plantaris MTJ were found to be much less profound than those observed in the soleus MTJ, under all experimental conditions. These qualitative and quantitative studies suggest that the mechanical charge imposed on muscle plays an important role in the structural organization of the MTJ.

Title of Study

Molecular Pharmacology of Alpha-1 Adrenoreceptors and Calcium Channels in Rat Vascular Myocytes

Science Discipline

Muscle physiology

Investigator	Institute
Chantal Mironneau	Université de Bordeaux II

Co-Investigator(s)	Institute
Mironneau, J.	Centre National Recherche Scientifique
Rakotoarisoa, L.	Université de Bordeaux II
Neuilly, G.	INSERM
Sayet-Colombet, L.	MRE

Research Subject(s)

Rattus norvegicus (Sprague-Dawley rat)

Flight: 20 Male

Ground-Based Controls

Basal: 15, Synchronous: 20, Vivarium: 5

Key Flight Hardware

Research Animal Holding Facility

Objectives/Hypothesis

The cardiovascular system adapts successfully to upper-body fluid shifts by increasing heart rate, blood pressure, and total peripheral vascular resistance and by decreasing venous pressure. These adaptive responses to fluid shift in space flight leads to a severe increase in heart rate and low blood pressure upon return to Earth. There have been few studies examining the effects of microgravity on contractile properties of smooth muscles and the cellular and molecular alterations that control vascular tone. The objectives of this experiment were to look at changes in contractile response to norepinephrine of the venae cavae, especially the alpha 1B adrenoreceptors, and to determine the mechanism by which the adrenoreceptors are altered.

Approach or Methods

Venae cavae were removed from flight rats and cut into longitudinal strips. Specific binding to adrenoceptors was measured by incubating the strips in various concentrations of (^{3}H) prazosin and determining radioactivity after dissolving strips in NaOH. Isometric contraction was measured in an experimental chamber using circular strips taken from the venae cavae. The maximum contractile response was determined using 30 µM norepinephrine. All other contractions were expressed as a percentage of maximal contraction. The inhibition of contractile response due to the binding of prazosin was also determined.

Results

A decrease in contractile strength in response to norepinephrine was found in flight rats. Binding affinity of (^{3}H) prazosin was reduced, indicating a reduction in specific affinity to alpha-1 adrenoreceptors. These data indicate that the reduction in contractile strength is due to a decrease in sensitivity of adrenoreceptors rather than a decrease in the number of adrenoreceptors. Ground control studies show a similar decrease in sensitivity through sustained activation of protein kinase C. This effect was not seen in the presence of an inhibitor of protein kinase C. This implies that desensitization of adrenoreceptors due to microgravity may be dependent on increased protein kinase C activity.

Title of Study

Single-Fiber Muscle Function

Science Discipline

Muscle physiology

Investigator	Institute
Yvonne Mounier	Université de Lille

Co-Investigator(s)	Institute
Stevens, Laurence	Université de Lille
Cordonnier, Corinne	Université de Lille
Picquet, Florence	Université de Lille

Research Subject(s)

Rattus norvegicus (Sprague-Dawley rat)

Flight: 5 Male

Ground-Based Controls

Synchronous: 5, Vivarium: 5

Key Flight Hardware

Research Animal Holding Facility

Objectives/Hypothesis

Previous studies examining the soleus (SOL) and extensor digitorum longus (EDL) muscles of the rat hindlimb indicate that muscles exposed to microgravity undergo atrophy and a change of fiber composition from slow- to fast-twitch types. These changes can vary depending upon the muscle participation in antigravitational activity (that is, posture) and on the functional profile of the muscle (slow- or fast-twitch). In order to corroborate these earlier findings, this study examined the functional (activated tension characteristics) and structural (myofibril composition) changes caused by microgravity in the tibialis anterior (TA), vastus intermedius (VI), as well as the soleus (SOL), and extensor digitorum (EDL) muscles of the rat hindlimb.

Approach or Methods

Fiber bundles were removed, isolated, and skinned from selected rat hindlimb muscles (SOL, VI, TA, EDL). In order to quantify the atrophy of the fiber, cross-sectional area (CSA) and maximal tension were measured. Then, each fiber underwent force measurements to establish tension/pCa and tension/pSr and to determine the functional properties of the muscle. Additional calculations and measurements were performed in order to determine Ca and Sr affinity. After the completion of these physiological measurements, the muscle fibers underwent analysis with sodium dodecyl sulphate polyacrimide gel electrophoresis (SDS-PAGE) in order to determine myosin heavy and light chain composition. The results were analyzed using a two-way analysis of variance (ANOVA).

Results

Electrophoretic analysis revealed that SOL fibers exposed to microgravity showed a significant increase in the proportion of fast fibers when compared to control fibers. In the mixed VI muscle, there was a progressive rearrangement between the different fiber types within the slow and fast populations without changes in the proportion (50/50) of each population. The transformation concerned the coexpression of slow and fast myosins with an increase in the proportion of fast isoforms. Decreases in CSA and maximal force appeared in SOL and was more marked for the slow fibers. VI exhibited only losses in force, while no change in CSA or force was detected in TA and EDL muscles. Another important effect of weightlessness concerned the Ca^{2+} activation characteristics of the fast transformed fibers, which showed a decrease in Ca affinity and an increase in the cooperativity of the different proteins of the thin filament.

Title of Study

Effects of Space Flight on β-Adrenoceptors in Rat Hindlimb Muscles

Science Discipline

Muscle physiology

Investigator	Institute
Yoshinobu Ohira	National Institute of Fitness and Sports

Co-Investigator(s)	Institute
Yasui, W.	National Institute of Fitness and Sports
Kariya, F.	National Institute of Fitness and Sports
Tanaka, T.	National Institute of Fitness and Sports
Kitajima, I.	Kagoshima University School of Medicine
Maruyama, I.	Kagoshima University School of Medicine
Nagaoka, S.	National Space Development Agency of Japan
Sekiguchi, C.	National Space Development Agency of Japan
Hinds, W.	NASA Ames Research Center

Research Subject(s)

Rattus norvegicus (Sprague-Dawley rat)

Flight: 10 Male

Ground-Based Controls

Basal: 5, Synchronous: 10

Key Flight Hardware

Research Animal Holding Facility

Objectives/Hypothesis

Gravitational unloading has been observed to cause changes in the slow-twitch muscle fibers of the antigravity soleus muscle. The density of ß-adrenoceptors (ß-AR) is greater in slow-twitch red muscle fibers than fast-twitch white muscle fibers. The density of ß-ARs in the rat soleus decreases in response to gravitational unloading, which has lead to the hypothesis that the same metabolic adaptation would occur in the rat plantaris muscle.

Approach or Methods

Plantaris muscles were taken from the right limb of rats approximately 5 hours after 14 days of space flight and were cut into 20 µm consecutive cross-sections. Quantitative autoradiographic analysis was performed determining the maximum binding capacity (Bmax) and the dislocation constant of b-1 and b-2 ARs. Qualitative histochemical analysis was performed after staining for myosin adenosine triphosphatase. Fibers were categorized as slow, intermediate, or fast. The activities of ß-hydroxyacyl CoA dehydrogenase (HAD) and succinate dehydrogenase (SDH) were measured spectrophotometrically.

Results

The Bmax of ß-AR was significantly lower after flight and did not normalize after 9 days of recovery. The dissociation constant remained unchanged, suggesting the changes in Bmax were caused by a change in the number of receptors. SDH activity was approximately 24% subnormal but normalized after 9 days of recovery. No significant responses were seen in HAD activity or in fiber-type percentages of flight animals. The decrease in Bmax seems to be associated with a decrease in the inner membrane enzymes of the mitochondria rather than with the matrix enzyme HAD.

SLS2-20

Title of Study

Electron Microscopy, Light Microscopy, and Protease Activity of Rat Hindlimb Muscles

Science Discipline

Muscle physiology

Investigator	Institute
Danny A. Riley	Medical College of Wisconsin

Co-Investigator(s)	Institute
Ellis, Stan	San Jose State University

Research Subject(s)

Rattus norvegicus (Sprague-Dawley rat)

Flight: 15 Male

Ground-Based Controls

Synchronous: 10, Vivarium: 15

Key Flight Hardware

Research Animal Holding Facility

Objectives/Hypothesis

Prior to SLS-2, all subject dissections were performed postflight. These rats were exposed to landing stress and gravity reloading on the skeletal muscles, making it difficult to distinguish microgravity adaptation from other factors. SLS-2 marked the first inflight dissections of experiment subjects, allowing specimens to be studied without postflight effects. This study examines the histochemistry and electron microscopy of the adductor longus and soleus muscles of a rat exposed to microgravity, as well as motor behavior of flight rats readapting to gravity.

Approach or Methods

Adductor longus, extensor digitorum longus, and soleus muscles were used for tissue processing and analysis. The occurrence of aberrant myofibers was determined in hematoxylin and eosin-stained sections of muscles. Myofiber cross-sectional areas and nonmyofiber areas were measured by computerized digitizing morphometry. Electron microscopy was performed on the aforementioned muscles. Eccentric contraction-like sarcomere lesions were defined as two or more hyperstretched sarcomeres with pale A-bands and wavy extracted Z-lines. The percentages of myofibers with these sarcomere lesions were counted. Groups were subjected postflight to daily videotaping of voluntary movements against a calibration grid square matrix in an open cage to permit quantitation of walking speed.

Results

On recovery day, body posture was abnormally low and walking was stilted at a rate one-third of normal. Movements appeared normal by day 3. The adductor longus and soleus muscles exhibited decreased myofiber areas that did not recover 14 days postflight. Doubling of the nonmyofiber area indicated interstitial edema in adductor longus muscles 2.3 hours postflight. Solei did not manifest edema postflight, and neither muscle showed edema in flight. Sarcomere eccentric contraction-like lesions were detected in 2.6% of adductor longus fibers 4.5 hours postflight but were absent earlier postflight and inflight. At 9 days postflight, these lesions were repaired, but regenerating adductor longus myofibers were present, suggesting myofiber necrosis occurred 1–2 days postflight. These studies demonstrate that muscle atrophy occurs in microgravity, whereas interstitial edema and sarcomere lesions are postflight phenomena.

Title of Study

Effects of Space Flight on Enzyme Activities and Ultrastructure of Fast-Type Skeletal Muscles of Rats

Science Discipline

Muscle physiology

Investigator	Institute
Toshitada Yoshioka	St. Marianna University School of Medicine

Co-Investigator(s)	Institute
Yamashita-Goto, K.	St. Marianna University School of Medicine
Tanaka, O.	St. Marianna University School of Medicine
Uchida, H.	St. Marianna University School of Medicine
Kimura, M.	St. Marianna University School of Medicine
Fujita, K.	St. Marianna University School of Medicine

Research Subject(s)

Rattus norvegicus (Sprague-Dawley rat)

Flight: 15 Male

Ground-Based Controls

Synchronous, Vivarium

Key Flight Hardware

Research Animal Holding Facility

Objectives/Hypothesis

There is little information available about the characteristics of fast muscles exposed to space microgravity. Calcium release from the sarcoplasmic reticulum (SR) is an important step in the excitation-contraction (E-C) coupling of skeletal muscle. It is generally accepted that transverse (T)-tubule is identified as a signal pathway from sarcolemma to the SR. However, there is no observation regarding the ultrastructure of these architectures in skeletal muscles exposed to actual microgravity. This study was designed to investigate structural changes in the myofilaments, the T-tubules, and the SR, as well as changes in the volume fraction of mitochondria and the activities of oxidative and glycolytic enzymes in fast-type skeletal muscles after space flight.

Approach or Methods

The skeletal muscles examined in this study were the tibialis anterior, the plantaris, the extensor digitorum longus (EDL), the medial gastrocnemius, and the lateral gastrocnemius sampled from the right limb. These muscles are generally classified as fast-type muscles. Several small sample blocks were dissected from the muscles and were fixed. These blocks were stained by modified Golgi's staining. The fraction was analyzed by point counting and a digitizer from electron micrographs of transverse sections for each muscle. A portion of each muscle (except the EDL) was homogenized and the supernatants were collected for biochemical analyses. The succinate dehydrogenase (SDH) and phosphofructokinase (PFK) activities were determined at 20 °C.

Results

Activity of SDH in medial gastrocnemius muscles of rats was significantly increased following 2-week space flight ($p < 0.05$). That of PFK in plantaris muscles was lowered after flight ($p < 0.05$). Overall activities of both enzymes were effectively maintained during flight. No structural alterations in the mitochondria and other organelles were observed in response to space flight. However, a myofilament disordering and central nucleus were often seen in the fast muscle during recovery after landing but not immediately after landing. These observations indicated that space flight increases susceptibility to sarcomere damage and metabolic activity in a specific muscle during reloading.

SLS2-22

Title of Study

Ultrastructural Changes in Choroid Plexus of Rats Maintained in Microgravity During a Space Flight

Science Discipline

Neurophysiology

Investigator	Institute
Jacqueline B. Gabrion	Université de Montpellier

Co-Investigator(s)	Institute
Gharib, C.	Université de Lyon
Herbuté, S.	Université de Montpellier

Research Subject(s)

Rattus norvegicus (Sprague-Dawley rat)

Flight: 21 Male

Ground-Based Controls

Vivarium, Synchronous, Asynchronous: 105, Hindlimb suspension: 30

Key Flight Hardware

Research Animal Holding Facility

Objectives/Hypothesis

The aim of the experiment was to evaluate the effects of microgravity on fine structure and protein organization of choroidal cells after a space flight. The functional consequences of space flight and hindlimb suspension were evaluated by immunocytochemistry and by molecular biology by detecting changes in the expression of cytoskeletal and membrane proteins in choroidal cells, which produce cerebrospinal fluid. Moreover, qualitative changes in the biosynthesis and storage of natriuretic peptides (using electron microscopy and immunocytochemistry) in hypothalamus and heart were evaluated under microgravity conditions.

Approach or Methods

Choroid plexuses from five brains dissected and fixed inflight and three others dissected 5–8 hours after landing were carefully isolated, fixed, and embedded in LX-112 epoxy resin. Those from two other animals dissected 5–8 hours after landing were fixed in the same conditions in 3% paraformaldehyde in PBS. Hypothalamus and the remaining brain with brainstem from these same brains were removed and directly frozen on dry ice before storage at -80 °C until sectioning. Whole brains from two animals in each group were fixed, washed, and dehydrated before embedding in Paraplast. Four other whole brains were directly frozen on dry ice and stored at -80 °C. Hearts were similarly processed for electron microscopy and immunocytochemistry. Atrial and ventricle samples were frozen for radioimmunoassay and Northern blot.

Results

Ultrastructural observations of choroidal cells (dissected inflight or 5–8 hours postflight) from adult rats showed a loss of cell polarity (altered kinocilia, loss of microvilli, decreases in apical ezrin) and a reduced choroidal secretion (accumulation of apical vesicles, loss of apical membrane and cytoplasmic molecules, involved in water and ionic transports, such as aquaporin 1, Na/K ATPase, carbonic anhydrase II). Similar effects were observed in hindlimb-suspended rats, whereas control rats displayed typical choroidal features. Those results suggested that after 2 weeks in weightlessness choroidal functions were altered, indicating a reduction in the secretory processes. As cerebrospinal fluid (CSF) is mainly produced by these cells, it was concluded that space flight and head-down suspension probably induce a reduced CSF production. Analyses of natriuretic peptides in hypothalamus and heart are still in progress.

Title of Study

Morphology of End and Intermediate Brain

Science Discipline

Neurophysiology

Investigator	Institute
Igor B. Krasnov	Institute of Biomedical Problems

Co-Investigator(s)	Institute
Dyachkova, Ludmilla	Russian Academy of Sciences

Research Subject(s)

Rattus norvegicus (Sprague-Dawley rat)

Flight: 15 Male

Ground-Based Controls

Basal: 5, Synchronous: 10

Key Flight Hardware

Research Animal Holding Facility

Objectives/Hypothesis

One goal of space flight is to determine the neuronal mechanisms by which an organism adapts to microgravity in space flight. One structure that has shown changes in previous space flights is the cerebral cortex. However, in all previous studies, subjects had been exposed to reentry stresses, increasing the proprioceptive impulses to the brain. SLS-2 offered the first opportunity to examine the somatosensory and visual cortex of rats exposed to microgravity without reentry effects.

Approach or Methods

Three groups of rats were used: one group was decapitated on flight day 13, the others were decapitated 5 hours postflight and 14 days postflight. Brains were removed from skulls no more than 3 minutes after decapitation and sectioned in half along the midline. Sections were fixed in glutaraldehyde in 2.5% 0.1 M cacodylate buffer, pH 7.3 at 4 °C. After fixation, cortical fragments were cut into 0.3–0.5 mm wide strips and dehydrated in ethanol of increasing concentrations and acetone. They were then embedded in araldite oriented in such a way that all cortical sections were cut when making ultrathin frontal sections. Electron microscopy was performed on these sections by Russian specialists. Ultrathin sections of three to five blocks of each cortical area were examined with a JEM electron microscope.

Results

Electron microscopic examinations of the somatosensory cortex of rats decapitated inflight revealed ultrastructural changes in the II-IV layers, which pointed to a lower number of signals entering the cortex in microgravity. This was seen as by an emergence of presynaptic axonal terminals with a low electron density of the matrix and an insignificant content of synaptic vesicles, termed "light" axonal terminals. The study of the ultrastructure of the somatosensory cortex of rats decapitated 14 days after recovery indicates that microgravity-induced changes are reversible but not completely after 14 days.

SLS2-24

Title of Study

Morphology and Histochemistry of Proprioceptive Cerebellum

Science Discipline

Neurophysiology

Investigator	Institute
Igor B. Krasnov	Institute of Biomedical Problems

Co-Investigator(s)	Institute
Grindeland, Richard	NASA Ames Research Center
Sawchenko, Paul E.	Salk Institute
Vale, Wylie	Salk Institute

Research Subject(s)

Rattus norvegicus (Sprague-Dawley rat)

Flight: 10 Male

Ground-Based Controls

Basal: 5, Vivarium cage: 10, Simulated cage: 10

Key Flight Hardware

Research Animal Holding Facility

Objectives/Hypothesis

Morphological and physiological investigations of animals have demonstrated that the cerebellar vermis receives proprioceptive signals from hindlimbs and produces a regulatory effect on antigravity muscles. Morphological examinations have also revealed structural changes in spinal ganglia, somatosensory cortex, and spinal cord, which pointed to a reduced number of extero- and proprioceptive signals entering the brain and reduced activity of spinal motorneurons. Another change is decreased tone of antigravitational muscles. It is important to study the anterior vermis, one of the structures regulating antigravitational muscles, of animals flown in space with the purpose of better understanding the mechanism of adaptation of antigravitational muscles to microgravity.

Approach or Methods

The upper central lobe of the vermis of rats was examined. Cytochrome oxidase activity was determined histochemically. In parallel sections the neuronal soma and nucleolus were stained. Cytochrome oxidase activity in the Purkinje cell cytoplasm, molecular layer, neuropile, and granular layer glomerules of the dorsal central lobe was measured densitometrically at 450 mm. Optical density of the cytoplasm was measured in three to five sites of 50 Purkinje cells of each animal. Fifty optical density measurements were taken in the molecular layer, neuropile, and granular layer glomerules. The nucleolar and neuronal cross-sections were measured in 40 stained Purkinje cell sections.

Results

Quantitative histochemistry of flight rats sacrificed 4–5 hours after space flight showed a trend toward a higher cytochrome oxidase activity in Purkinje cells, molecular-layer, and granular-layer glomerules. This trend was most significant in the molecular layer. Cytochrome oxidase activity indicated dorsal central lobe function during flight. No changes were observed in the size of the Purkinje cell nucleolus and cell body taken from the dorsal central lobe of flight rats. This suggests there were no changes in the synthesis rate of Purkinje cells and their activity was equal to that of vivarium controls. Therefore, these Purkinje cells maintained their capability to inhibit neurons of the dorsal caudal compartment of the lateral vestibular compartment during space flight. The number of afferent signals reaching the dorsal central lobe in microgravity appears adequate to maintain its activity at a level comparable to that on the ground.

Title of Study

Ultrastructure and Histochemistry of Vestibular Structures and Vegetative Nuclei of the Brain

Science Discipline

Neurophysiology

Investigator	Institute
Igor B. Krasnov	Institute of Biomedical Problems

Co-Investigator(s)	Institute
Grindeland, Richard E.	NASA Ames Research Center
Sawchenko, Paul E.	Salk Institute
Vale, Wylie	Salk Institute

Research Subject(s)

Rattus norvegicus (Sprague-Dawley rat)

Flight: 10 Male

Ground-Based Controls

Basal: 5, Vivarium: 10

Key Flight Hardware

Research Animal Holding Facility

Objectives/Hypothesis

Electron microscopic study of the medial nodulus of the cerebellum of rats flown in space revealed neuronal and glial changes in the granular and molecular layers of the nodulus cortex. The ultrastructural changes pointed to a reduction of vestibular signals that reached the Purkinje cells via the medial nodulus and to no changes in visual signals that reached Purkinje cells from the inferior olive. However, those experiments were inadequate to assess nodular Purkinje cells. The purpose of the present study was to investigate nodular Purkinje cells of rats using histochemical and morphometric procedures.

Approach or Methods

The first group of animals was euthanized immediately postflight (R+0) and a second group was euthanized 14 days later (R+14). The cerebellum of each rat was dissected. After sectioning, sagittal sections were analyzed histochemically for cytrochrome oxidase. Other sections were stained according to a modified method of Howell and Black. The cross-sectional area of the nucleolus and neuronal body of representative Purkinje cells of the nodulus cortex were measured. Cytochrome oxidase activity in Purkinje cells, molecular layer structures, neuropiles, and glomerules of the granular layer of the nodulus cortex was measured densitometrically at 450 nm using a microscope equipped with a photometric device. Optic density of the neuronal cytoplasm was also measured and analyzed using the Student-Fisher statistical method.

Results

Morphometric analysis of Purkinje cells of the medial nodulus of flight animals (R+0) revealed a significant increase in cross-section of the body and nucleolus. Densitometric examination of the nodulus of R+0 rats demonstrated a significant decrease in cytochrome oxidase in the molecular layer, no changes in the cytoplasm of Purkinje cells and glomerules of the granular layer, and a minor decrease in the neuropile of the granular layer. Visual examination of the density of glomerules in the glomerular layer and their size showed a small cross-section area for R+0 rats when compared to ground controls. Purkinje cells of the medial nodulus of R+14 rats did not show any changes in cross-sectional area of the body and nucleolus or in the cytochrome oxidase activity in the cytoplasm. Cytochrome oxidase activity also remained unaltered in the molecular layer, neuropile, and glomerules of the granular layer of the nodular cortex.

SLS2-26

Title of Study

Effects of Space Travel on Mammalian Gravity Receptors

Science Discipline

Neurophysiology

Investigator	Institute
Muriel D. Ross	NASA Ames Research Center

Co-Investigator(s)	Institute
Not applicable	

Research Subject(s)

Rattus norvegicus (Sprague-Dawley rat)

Flight: 16 Male

Ground-Based Controls

Asynchronous: 16, Vivarium: 5

Key Flight Hardware

Research Animal Holding Facility

Objectives/Hypothesis

Results of an analysis of the number, type, and distribution of synapses in rats flown on the SLS-1 mission and ground-control rats demonstrated that mammalian gravity sensors retain the property of neural plasticity into the adult stage. This experiment intended to replicate and expand the findings of the SLS-1 experiment with the following objectives: 1) to determine the acute effects of space flight on the ultrastructure of otoconia and neuroepithelium in vestibular organs by inflight tissue fixation for later microscopy; 2) to determine the chronic and/or progressive effects of space flight on the integrity of the vestibular organs by studying these organs immediately postflight and after a postflight recovery period; and 3) to determine the feasibility of inflight tissue dissection.

Approach or Methods

Synapses were analyzed from 100 serial sections taken from maculas of flight and ground control animals. Maculas were oriented so that sections were obtained from the posterior portion. Collection of sections, 150 nm thick, began ~64 µm into the tissue. Samples were taken from several areas across the macula to learn whether differences in synaptic count occur from site to site. Tissues were fixed and examined ultrastructurally with a TEM microscope. Synapses were photographed and counted in blocks of 100 serial sections, using mosaics of every fifth or seventh section to locate the synapses to numbered cells. Ultrastructural and statistical analysis of variance (ANOVA) followed by Scheffe's S procedure for *post-hoc* comparison were carried out.

Results

The maculas of two rats dissected inflight (IF), two 13-day controls (IFC), and two R+0 rats have been studied. Synapses were counted in 100 serial sections. The difference between synaptic means of IF and control rat Type I cells was statistically significant ($p < 0.02$). The difference between synaptic means of Type II cells in IF and control rats was also significant ($p < 0.0001$). There was close correspondence between: 1) low counts at initial sampling of controls in both flight experiments (SLS-1, R0, 6.0 ± 4.5, n = 180; SLS-2, F13, 5.4 ± 3.9, n = 120); and 2) mean values for flown rats at R+0 in both flights (9.3 ± 6.8, n = 142 for SLS-1 and 8.8 ± 6.6, n = 94 for SLS-2). These preliminary results replicate the main findings from the SLS-1 experiment.

Title of Study

Cellular Homeostasis in Microgravity: Energy and Structure

Science Discipline

Renal, fluid, and electrolyte physiology

Investigator	Institute
S.M. Ivanova	Institute of Biomedical Problems

Co-Investigator(s)	Institute
Popova, Irena A.	Institute of Biomedical Problems

Research Subject(s)

Rattus norvegicus (Sprague-Dawley rat)

Flight: 10 Male

Ground-Based Controls

Basal: 5, Synchronous: 10

Key Flight Hardware

Research Animal Holding Facility

Objectives/Hypothesis

Analysis of previously reported biochemical parameters of space flight have shown that an animal's metabolic status is greatly affected when it undergoes a transition from 0 to 1 G. The importance of this study was the opportunity to examine biosamples isolated and fixed in space. This allows a better understanding of metabolic balance in microgravity and its qualitative and quantitative changes upon return to the Earth's gravitational field. For this purpose, enzyme activities were measured in plasma as well as subcellular fractions, isolated by differential centrifugation of liver homogenates.

Approach or Methods

Samples were taken from three groups of rats, decapitated on flight-day 13 (F+13), on landing day (4 hours after landing), and 14 days after landing (R+14). The liver was removed and a mitochondrial supernatant was prepared and analyzed using commercial Boehringer Mannheim test kits. Blood samples were taken and studies were performed on isolated erythrocytes. Metabolic parameters were measured using a spectrophotometer. The results were calculated per 1 g hemoglobin, measured by means of the cyan methemoglobin procedure. Membrane lipids and phospholipids were determined by thin-layer chromatography. Mitochondrial enzymes were evaluated by quantitative cytochemistry.

Results

Glucose and isocitrate dehydrogenase (ICDH) levels were decreased, while glycolysis and ATP synthesis were increased in flight rats. Immediately after recovery, hypoglycemia was replaced with hyperglycemia. Some enzymes (AST, LDH, CPK) returned to preflight levels, while alkaline phosphatase decreased and acid phosphatase increased. Nitrogen metabolism changes occurred during flight and persisted immediately after flight, leading to a higher level of creatine in the blood and lower activity in the Krebs cycle. Study of activity of hepatic subcellular fractions gave evidence that the recovery of metabolic balance in blood challenges biochemical processes in the liver: at R+14 aminotransferases in the cytoplasm were in the hypercompensation state. Changes in basic metabolic parameters in erythrocytes and lymphocytes were evidently produced by changes in the structure and function of their membranes. This was shown by the lipid and phospholipid composition of membranes.

Title of Study

Kidneys and Fluid-Electrolyte Homeostasis

Science Discipline

Renal, fluid, and electrolyte physiology

Investigator	Institute
Luba V. Serova	Institute of Biomedical Problems

Co-Investigator(s)	Institute
Natochin, Y.V.	Sechenov Institute of Evolutionary Physiology and Biochemistry
Shakhmatova, E.Y.	Sechenov Institute of Evolutionary Physiology and Biochemistry

Research Subject(s)

Rattus norvegicus (Sprague-Dawley rat)

Flight: 16 Male

Ground-Based Controls

Basal: 5, Synchronous: 16, Vivarium: 16

Key Flight Hardware

Research Animal Holding Facility

Objectives/Hypothesis

Previous studies have examined the effects of space flight on the water, sodium, potassium, calcium, and magnesium concentrations in the skin, bone, liver, kidneys, heart, and reproductive organs. However, the specific effects of microgravity could be masked by the effects of readaptation to the Earth's environment. The purpose of this experiment is to study the kidney and fluid-electrolyte homeostasis of rats dissected inflight.

Approach or Methods

The kidney was isolated into its components (medulla, papillae, and cortex) and dried for water measurement. The dried samples were ashed using nitric acid at 80 °C. Sodium and potassium levels were measured using a photometer. Calcium and magnesium were measured using an atomic absorption spectrophotometer. The results were analyzed using Student's *t*-test.

Results

Data analysis was difficult due to significant variations within the controls. However, the following results were obtained. Rats dissected inflight (IF) had water and sodium contents in the renal component identical to the controls. Potassium content in the medulla and cortex were identical, while in the papillae, it was lower in flight rats. Calcium was decreased in the cortex, and magnesium was decreased in the cortex and papillae. Rats dissected immediately postflight (R+0) showed a decrease in water content in the cortex and papillae. The concentrations of electrolytes were identical to those of the controls. Rats dissected 14 days postflight (R+14) had water and electrolyte concentration unchanged in the medulla and papillae, while water and electrolyte concentrations in the cortex increased.

Appendix II

Publications

Page intentionally left blank

Experiment Publications

This Appendix lists publications resulting from life sciences flight experiments and related ground-based studies developed and/or supported by Ames Research Center and Kennedy Space Center between 1991 and 1995.

Due to the relatively long period between completion of a flight experiment and the publication of results, and the fact that this Appendix was compiled as of May 1999, some current publications may not be included. Peer-reviewed journals have been given preference over conference proceedings, bulletins, etc. These listings are intended to provide a road map for the reader seeking more information and may not be comprehensive.

Publications are grouped by mission, payload program, payload, experiment reference number, and alphabetically by author, in the corresponding order of the experiment descriptions in Appendix I. The unique experiment reference numbers, appearing in the left-hand column, link publications to the corresponding experiment descriptions.

Publications may come from the open scientific literature or internal NASA documentation. Any publication or abstract that focuses on flight experiment results is included. Publications of related ground-based studies are listed together with flight experiment publications, and are indicated by a dagger (†). A related ground-based study is defined as a preflight investigation intended to assist in the definition of a flight experiment or a postflight investigation designed to help interpret or expand flight experiment data.

Readers interested in more information are encouraged to use Spaceline, a comprehensive Space Life Sciences Bibliographic Database, produced through the cooperative efforts of NASA and the National Library of Medicine. Searching Spaceline is free, and available through the National Library of Medicine's Internet Grateful Med (IGM) search interface. Grateful Med is located on the Internet at http://igm.nlm.nih.gov/.

Preceding Page Blank

Page intentionally left blank

BRIC1-2

- Brown, C.S. et al.: Metabolism, Ultrastructure and Growth of Soybean Seedlings in Microgravity: Results from the BRIC-01 and BRIC-03 Experiments (abstract). American Society for Gravitational and Space Biology Bulletin, vol. 9(1), 1995, p. 93.
- Brown, C.S. et al.: Soybean Seedling Growth, Ultrastructure, and Carbohydrate Metabolism in Microgravity. Plant Physiology, vol. 108(Suppl. 2), 1995, p. 24.
- Gallegos, G.L. et al.: Effects of Microgravity and Clinoration on Stress Ethylene Production in Two Starchless Mutants of *Arabidopsis thaliana*. American Society for Gravitational and Space Biology Bulletin, vol. 9(1), 1995, p. 16.
- Gallegos, G.L. et al.: Effects of Microgravity and Clinoration on Stress Ethylene Production in Two Starchless Mutants of *Arabidopsis thaliana*. Journal of Gravitational Physiology, vol. 2(1), 1995, pp. 153–154.
- Gallegos, G.L. et al.: Effects of Stress Ehylene Inhibitors on Sweet Clover (*Melilotus alba* L.) Seedling Growth in Microgravity. Journal of Gravitational Physiology, vol. 2(1), 1995, pp. 151–152.
- Hilaire, E. et al.: Clinorotation Affects Soybean Seedling Morphology. Journal of Gravitational Physiology, vol. 2(1), 1995, pp. P149–P150.
- Piastuch, W.C. and C.S. Brown: Protein Expression in *Arabidopsis thaliana* after Chronic Clinorotation. Journal of Plant Physiology, vol. 146(3), 1995, pp. 329–332.

BRIC2-1

- Conger, B.V. et al.: Reduction in Somatic Embryo Formation from Orchardgrass Leaf Segments Flown in the BRIC-02 Experiment. American Society for Gravitational and Space Biology Bulletin, vol. 9(1), Oct 1995, p. 93.
- McDaniel, J.K. et al.: Histological Studies of Leaf Tissue and Chromosome Analysis of Regenerated Plants from the BRIC-02 Experiment with Orchardgrass *In Vitro* Cultures. American Society for Gravitational and Space Biology Bulletin, vol. 9(1), Oct 1995, p. 93.
- McDaniel, J.K. et al.: Effect of Microgravity on Somatic Embryogenesis from Orchardgrass Leaf Segments. *In Vitro* Cell Developmental Biology, vol. 32(3), Part II, 1996, p. 82A.
- McDaniel, J.K. et al.: Further Results from the BRIC-02 Experiment with Orchardgrass *In Vitro* Leaf Cultures. American Society for Gravitational and Space Biology Bulletin, vol. 10(1), 1996, p. 74.

BRIC3-1

- Brown, C.S. et al.: Metabolism, Ultrastructure and Growth of Soybean Seedlings in Microgravity: Results from the BRIC-01 and BRIC-03 Experiments. American Society for Gravitational and Space Biology Bulletin, vol. 9(1), 1995, p. 93
- Brown, C.S. et al.: Soybean Seedling Growth, Ultrastructure, and Carbohydrate Metabolism in Microgravity. Plant Physiology, vol. 108(2 Suppl), 1995, p. 24.

‡=Publication of related ground-based study

Preceding Page Blank

- Gallegos, G.L. et al.: Effects of Microgravity and Clinoration on Stress Ethylene Production in Two Starchless Mutants of *Arabidopsis thaliana*. American Society for Gravitational and Space Biology Bulletin, vol. 9(1), 1995, p. 16.
- Gallegos, G.L. et al.: Effects of Microgravity and Clinoration on Stress Ethylene Production in Two Starchless Mutants of *Arabidopsis thaliana*. Journal Gravitational Physiology, vol. 2(1), 1995, pp. 153–154.
- Gallegos, G.L. et al.: Effects of Stress Ethylene Inhibitors on Sweet Clover (*Melilotus alba* L.) Seedling Growth in Microgravity. Journal of Gravitational Physiology, vol. 2(1), 1995, pp. 151–152.
- Hilaire, E. et al.: Clinorotation Affects Soybean Seedling Morphology. Journal of Gravitational Physiology, vol. 2(1), 1995, pp. P149–P150.
- Piastuch, W.C. and C.S. Brown: Protein Expression in *Arabidopsis thaliana* after Chronic Clinorotation. Journal of Plant Physiology, vol. 146 (3), 1995, pp. 329–332.

BRIC4-1

- Tischler, M.E. et al.: Ecdysteroids Affect *In Vivo* Protein Metabolism of the Flight Muscle of the Tobacco Hornworm (*Manduca sexta*). Journal of Insect Physiology, vol. 36(10), 1990, pp. 699–708.†

BRIC5-1

- Krikorian, A.D.: Hormones in Tissue Culture and Micropropagation. Plant Hormones: Physiology, Biochemistry and Molecular Biology, Dordrecht, Netherlands, 1995, pp. 774–796.
- Krikorian, A.D.: Regeneration of Plants from Protoplasts of *Hemerocallis* (Daylily). Biotechnology in Agriculture and Forestry, Springer-Verlag, Berlin, Heidelberg, vol. 34, 1995, pp. 70–78.
- Nechitailo, G.S. and A.L. Mashinsky: Space Biology: Studies at Orbital Stations, Nikolai Lyubimov, trans. Moscow: Mir Publishers, 1993.
- Krikorian, A.D.: Space Biology: Studies at Orbital Stations (review). Quarterly Review of Biology, vol. 70, 1995, pp. 513–514.
- Krikorian, A.D.: Space Stress and Genome Shock in Developing Plant Cells. American Society for Gravitational and Space Biology Bulletin, vol. 9(1), 1995, p. 63.
- Krikorian, A.D.: Strategies for "Minimal Growth Maintenance" of Cell Cultures: A Perspective On Management for Extended Duration Experimentation in the Microgravity Environment of a Space Station. Botanical Review, vol. 62(1), Jan–Mar 1996, pp. 41–108.
- Krikorian, A.D. and J. Brennan: Ancymidol and Daylilies. The Daylily Journal, vol. 50(4), 1995, pp. 414–417.
- Krikorian, A.D. et al.: Somatic Embryogenesis in Daylily (*Hemerocallis*). In: Biotechnology in Agriculture and Forestry, Y.P.S. Bajaj, ed. Berlin, Heidelberg: Springer-Verlag, vol. 31, 1995, pp. 285–293.

†=Publication of related ground-based study

BRIC6-1

- Block, I. et al.: Graviperception and Signal Transduction in Physarum. Conference: European Symposium on Life Sciences Research in Space (6th : 1996 Jun 16–20 : Trondheim, Norway), European Space Agency SP-390, 1996, pp. 199–202.
- Block, I. et al.: Involvement of the Second Messenger cAMP in Gravity-Signal Transduction in Physarum. Conference: COSPAR Scientific Assembly (31st: 1996 Jul 14–21: Birmingham, United Kingdom), Advances in Space Research, vol. 21(8–9), 1998, pp. 1311–1314.

CHRMX1-1

- Krikorian, A.D.: Space Stress and Genome Shock in Developing Plant Cells. Physiologia Plantarum, vol. 98(4), 1996, pp. 901–908.
- Krikorian, A.D.: Strategies for "Minimal Growth Maintenance" of Cell Cultures: a Perspective on Management for Extended Duration Experimentation in the Microgravity Environment of a Space Station. Botanical Review, vol. 62(1), Jan–Mar 1996, pp. 41–108.
- Krikorian, A.D. et al.: Effects of Spaceflight on Growth and Cell Division in Higher Plants. Advances in Space Biology and Medicine, vol. 2, 1992, pp. 181–209.
- Levine, H.G. and A.D. Krikorian: Enhanced Root Production in *Haplopappus gracialis* Grown under Space Flight Conditions. Journal of Gravitational Physiology, vol. 3(1), 1996, pp. 17–27.
- Levine, H.G. et al.: Plant Development in Space: Observations on Root Formation and Growth. In: Fourth European Symposium on Life Sciences Research in Space, V. David, ed. Noordwijk, The Netherlands: European Space Agency SP- 307, 1990, pp. 503–508.
- Levine, H.G. et al.: Base-line Studies and Management Schemes for a Plant Experiment in Space. American Society for Gravitational and Space Biology Bulletin, vol. 2(1), 1989, p. 43.
- Levine, H.G. et al.: Results from the Chromosomes and Plant Cell Division Experiment (Chromex) Flown Aboard Shuttle Mission STS-29. American Society for Gravitational and Space Biology Bulletin, vol. 4(1), Oct 1990, p. 78.
- Levine, H.G. and A.D. Krikorian: Chromosomes and Plant Cell Division in Space: Environmental Conditions and Experiment Details. Advances in Space Research, vol. 12(1), 1992, pp. 73–82.
- Levine, H.G. and A.D. Krikorian: Shoot Growth in Aseptically Cultivated Daylily and *Haplopappus* Plantlets after a 5-Day Spaceflight. Physiologia Plantarum, vol. 86(3), 1992, pp. 349–359.
- Levine, H.G. and A.D. Krikorian: Value of Linear Additive Models for Interpreting Spaceflight Results. American Society for Gravitational and Space Biology Bulletin, vol. 6(1), Oct 1992, p. 52.
- Levine, H.G. and A.D. Krikorian: Shoot Growth, Root Formation and Chromosome Damage Results for the Chromex 1 Experiment (Shuttle Mission STS-29). American Society for Gravitational and Space Biology Bulletin, vol. 5(1), Oct 1991, p. 28.
- Levine, H.G. et al.: Baseline Data and Design Considerations in a Plant Tissue Sharing Effort. American Society for Gravitational and Space Biology Bulletin, vol. 7(1), Oct 1993, p. 38.

†=Publication of related ground-based study

CHROMEX Publications

CHRMX2-1

- Krikorian, A.D.: Space Stress and Genome Shock in Developing Plant Cells. Physiologia Plantarum, vol. 98(4), 1996, pp. 901–908.
- Krikorian, A.D. et al.: Effects of Spaceflight on Growth and Cell Division in Higher Plants. Advances in Space Biology and Medicine, vol. 2, 1992, pp. 181–209.
- Levine, H.G. and A.D. Krikorian: Value of Linear Additive Models for Interpreting Spaceflight Results. American Society for Gravitational and Space Biology Bulletin, vol. 6(1), Oct 1992, p. 52.
- Levine, H.G. et al.: Baseline Data and Design Considerations in a Plant Tissue Sharing Effort. American Society for Gravitational and Space Biology Bulletin, vol. 7(1), Oct 1993, p. 38.

CHRMX3-1

- Crispi, M.L. et al.: Role of Metabolic Gases in Reproductive Failure under Spaceflight Conditions: Ground Based Studies With *Arabidopsis*. SAE Technical Paper, Series #961391, 1996.
- Kuang, A. et al.: Pollen and Ovule Development in *Arabidopsis thaliana* under Spaceflight Conditions. American Journal of Botany, vol. 82(5), May 1995, pp. 585–595.
- Kuang, A. et al.: Pollen Development in *Arabidopsis thaliana* in Microgravity (abstract). American Society for Gravitational and Space Biology Bulletin, vol. 7(1), Oct 1993, p. 66.
- Matthews, S.W. et al.: Spaceflight Effects on Ultrastructure of Leaves and Roots of *Arabidopsis thaliana* (abstract). American Society for Gravitational and Space Biology Bulletin, vol. 7(1), Oct 1993, p. 83.
- Musgrave, M.E. et al.: Plant Reproduction during Spaceflight: Importance of the Gaseous Environment. Planta, vol. 203, 1997, pp. S177–S184.
- Musgrave, M.E. et al.: Plant Reproduction in Spaceflight Environments. Gravitational Space Biology Bulletin, vol. 10(2), Jun 1997, pp. 83–90.
- Porterfield, D.M. et al.: Spaceflight Exposure Effects on Transcription, Activity, and Localization of Alcohol Dehydrogenase in the Roots of *Arabidopsis thaliana*. Plant Physiology, vol. 113(3), Mar 1997, pp. 685–693.

CHRMX4-1

- Krikorian, A.D.: Space Stress and Genome Shock in Developing Plant Cells. Physiologia Plantarum, vol. 98(4), 1996, pp. 901–908.
- Tripathy, B.C. et al.: Growth and Photosynthetic Responses of Wheat Plants Grown in Space. Plant Physiology, vol. 110(3), Mar 1996, pp. 801–806.

† =Publication of related ground-based study

CHRMX4-2

- Bennett, J.H. et al.: Photosynthesis and Biomass Production by Super Dwarf Wheat Plants Grown at High CO_2 Concentrations and Low Light (abstract). Plant Physiology, vol. 102 (Suppl. 1), May 1993, p. 137.
- He, L. et al.: Cellulose Microfibril Organization and Secondary Wall Thickening Patterns of Wheat (*Triticum aestivum* L.) Primary Roots Formed in Microgravity. Phytochemistry. (In Press)
- Heyenga, A.G. and N.G. Lewis: Application of Solid State Nutrient Media in Long Term Culture of Plants under Space Flight Conditions (abstract). American Society for Gravitational and Space Biology Bulletin, vol. 6(1), Oct 1992, p. 68.
- Lewis, N.G. and C.A. Ryan: Microgravity Research in Plant Biological Systems: Realizing the Potential of Molecular Biology. Space Life Sciences Research: the Importance of Long-Term Space Experiments, NASA TM-4502, 1993, pp. 31–34.
- Lewis, N.G.: Plant Metabolism and Cell Wall Formation in Space (Microgravity) and on Earth. NASA-CR 197618, 1994.

CHRMX4-3

- Crispi, M.L. et al.: Role of Metabolic Gases in Reproductive Failure under Spaceflight Conditions: Ground Based Studies with *Arabidopsis*. SAE Technical Paper, Series #961391, 1996.
- Kuang, A. and M.E. Musgrave: Dynamics of Vegetative Cytoplasm during Generative Cell Formation and Pollen Maturation in *Arabidopsis thaliana*. Protoplasma, vol. 194(1–2), 1996, pp. 81–90.
- Kuang, A. et al.: Modification of Reproductive Development in *Arabidopsis thaliana* under Spaceflight Conditions. Planta, vol. 198(4), 1996, pp. 588–594.
- Kuang, A. et al.: Reproductive Development of *Arabidopsis thaliana* under Spaceflight Conditions on STS-51. American Society for Gravitational and Space Biology Bulletin, vol. 8(1), 1994, p. 70.
- Musgrave, M.E. et al.: Plant Reproduction during Spaceflight: Importance of the Gaseous Environment. Planta, vol. 203(Suppl), 1997, pp. S177–S184.
- Musgrave, M.E. et al.: Plant Reproduction in Spaceflight Environments. Gravitational and Space Biology Bulletin, vol. 10, 1997, pp. 83–90.

CHRMX5-1

- Kuang, A. et al.: Control of Seed Development in *Arabidopsis thaliana* by Atmospheric Oxygen. Plant, Cell and Environment, vol. 21(1), 1998, pp. 71–78.
- Kuang, A. et al.: Cytochemical Localization of Reserves during Seed Development in *Arabidopsis thaliana* under Spaceflight Conditions. Annals of Botany, vol. 78, 1996, pp. 343–351.

†=Publication of related ground-based study

CHROMEX Publications

- Kuang, A. et al.: Dynamics of Vegetative Cytoplasm during Generative Cell Formation and Pollen Maturation in *Arabidopsis thaliana*. Protoplasma, vol. 194, 1996, pp. 81–90.
- Musgrave, M.E. et al.: Plant Reproduction during Spaceflight. Planta, vol. 203, 1997, pp. S177–S184.
- Musgrave, M.E. et al.: Plant Reproduction in Spaceflight Environments. Gravitational and Space Biology Bulletin, vol. 10(2), Jun 1997, pp. 83–90.
- Porterfield, D.M. et al.: Changes in Soluble Sugar, Starch, and Alcohol Degydrogenase in *Arabidopsis thaliana* Exposed to N_2 Diluted Atmospheres. Plant and Cell Physiology, vol 38(12), 1997, pp. 1354–1358.
- Porterfield, D.M. and M.E. Musgrave: Oxytropism in Plant Roots. Gravitational and Space Biology Bulletin, vol. 10(1), 1996,pp. 23.
- Porterfield, D.M. et al.: Spaceflight Exposure Effects on Transcription, Activity, and Localization of Alcohol Dehydrogenase in the Roots of *Arabidopsis thaliana*. Plant Physiology, vol. 113(3), Mar 1997, pp. 685–693.
- Porterfield, D.M. and M.E. Musgrave: The Tropic Response of Plant Roots to Oxygen: Oxytropism in *Pisum Sativum* L. Planta, vol. 206(1), 1998, pp. 1–6.

CHRMX6-1

- Bishop, D.L. et al.: Wheat Cell Wall Structure in Microgravity. II. Lignin Deposition, Hydrogen Peroxide Concentration, Calcium Localization and Cell Wall Anatomy From CHROMEX-06 Experiment; STS-63. American Society for Gravitational and Space Biology Bulletin, vol. 9(1), 1995, pp. 92.
- Hood, E.E. et al.: Wheat Cell Wall Structure in Microgravity. I. Plant Growth Parameters, Tensile Strength and Carbohydrate Analysis From CHROMEX-06 Experiment; STS-63. American Society for Gravitational and Space Biology Bulletin, vol. 9(1), 1995, pp. 92.
- Singh-Cundy, A. et al.: Wheat Cell Wall Structure in Microgravity. III. Peroxidase Activity and Protein Profiles in Soluble Cell Wall Extracts From CHROMEX-06 Experiment; STS-63. American Society for Gravitational and Space Biology Bulletin, vol. 9(2), 1995, pp. 158.

C2229-1

- Arnaud, S.B. and B. Silver: A Non-Invasive Measure of Minerals and Electrolytes in Tissue (Correction of Tissue). In: Technology 2000, NASA CP-3109, vol. 2, 1991, pp. 151–154.†
- Arnaud, S.B. et al.: Mechanical Response Tissue Analyzer for Estimating Bone Strength. In: Technology 2000, NASA CP-3109, vol. 1, 1991, pp. 83–88.†
- Arnaud, S.B. et al.: Mineral Distribution in Rat Skeletons after Exposure to a Microgravity Model. Journal of Gravitational Physiology, vol. 2(1), 1995, pp. P115–P118.†

†=Publication of related ground-based study

- Arnaud, S.B. et al.: Bone Mineral in Rats Fed High Salt Diets in a Space Flight Model (abstract). Journal of Bone Mineral Research, vol. 7 (Suppl. 1), Aug 1992, p. S276.†
- Navidi, M. et al.: Effect of Excess Dietary Salt on Calcium Metabolism and Bone Mineral in a Spaceflight Rat Model. Journal of Applied Physiology, vol. 78(1), Jan 1995, pp. 70–75.†
- Navidi, M. et al.: Effects of Salt-Induced Calciuria on Calcium Metabolism in Mature Rats in a Tail Suspension Space Flight Model: American Society for Gravitational and Space Biology Bulletin, vol. 7(1), Oct 1993, p. 36.†
- Arnaud, S.B. et al.: Bending Stiffness of the Tibia in Young Rhesus Monkeys after Two Weeks in Space aboard the Cosmos 2229 Biosatellite. Final Reports of the U.S. Experiments Flown on the Soviet Biosatellite Cosmos 2229, NASA TM-110439, Apr 1997, pp. 67–80.
- Hutchinson, T.M. et al.: Right and Left Tibia EI (Bending Stiffness) Differences in Rhesus Monkeys (abstract). Aviation, Space, and Environmental Medicine, vol. 64(5), May 1993, p. 453.†

C2229-2

- LeBlanc, A. et al.: DEXA Measurements: Cosmos 2229 Rhesus Flight Experiment. Final Reports of the U.S. Experiments Flown on the Soviet Biosatellite Cosmos 2229, NASA TM-110439, Apr 1997, pp. 93–107.
- Zerath, E. et al.: Effects of Spaceflight on Bone Mineralization in the Rhesus Monkey. Journal of Applied Physiology, vol. 81(1), Jul 1996, pp. 194–200.

C2229-3

- Cann, C.E.: Skeletal Structure-Function Revisited. Radiology, vol. 179(3), Jun 1991, pp. 607–608.†
- Cann, C.E. et al.: Calcium Metabolism and Correlated Endocrine Measurements in Primates during Cosmos 2229. Final Reports of the U.S. Experiments Flown on the Soviet Biosatellite Cosmos 2229, NASA TM-110439, Apr 1997, pp. 83–89.
- Patterson-Buckendahl, P. et al.: Regulation of Plasma Osteocalcin by Corticosterone and Norepinephrine during Restraint Stress. Bone, vol. 17(5), Nov 1995, pp. 467–472.†

C2229-4

- Fuller, C.A.: The Effects of Gravity on the Circadian Timing System. Journal of Gravitational Physiology, vol. 1(1), 1994, pp. P1–P4.
- Fuller, C.A. et al.: Circadian Rhythms and Temperature Regulation in Rhesus Monkeys during Spaceflight. Final Reports of the U.S. Experiments Flown on the Soviet Biosatellite Cosmos 2229, NASA TM-110439, Apr 1997, pp. 217–237.
- Fuller, C.A. et al.: Influence of Gravity on the Circadian Timing System. Advances in Space Research, vol. 14(8), 1994, pp. 399–408.†

†=Publication of related ground-based study

- Fuller, C.A. et al.: Primate Circadian Rhythms during Spaceflight: Results from Cosmos 2044 and 2229. Journal of Applied Physiology, vol. 81(1), 1996, pp. 188–193.
- Fuller, C.A. et al.: Effects of Altered Gravitational Environments on Primate Circadian Rhythms. Biological Rhythm Research, vol. 26(4), 1995, p. 391.

C2229-5

- Grindeland, R.E. et al.: Plasma Hormone Concentrations in Rhesus Monkeys after Spaceflight. Final Reports of the U.S. Experiments Flown on the Soviet Biosatellite Cosmos 2229, NASA TM-110439, Apr 1997, pp. 355–371.

C2229-6

- Lesnyak, A.T. et al.: Immune Changes in Test Animals during Spaceflight. Journal of Leukocyte Biology, vol. 54(3), Sep 1993, pp. 214–226.
- Morton, D.S. et al.: Effects of Movement Limitation on Immunological Parameters. American Society for Gravitational and Space Biology, vol. 9(1), Oct 1995, p. 32.†
- Sonnenfeld, G. et al.: Effect of Space Flight on Cytokine Production and Other Immunologic Parameters of Rhesus Monkeys. Journal of Interferon Cytokine Research, 16(5), May 1996, pp. 409–415.
- Sonnenfeld, G. et al.: Cosmos 2229 Rhesus Monkey Immunology Study (Experiment K-8–07). Final Reports of the U.S. Experiments Flown on the Soviet Biosatellite Cosmos 2229, NASA TM-110439, Apr 1997, pp. 251–290.

C2229-7

- Fuller, C.A. et al.: Rhesus Monkey Metabolism during Spaceflight: Measurement of Energy Expenditure Using the Doubly Labeled Water ($^2H_2{}^{18}O$, DLW) Method. Final Reports of the US Experiments Flown on the Soviet Biosatellite Cosmos 2229, NASA TM-110439, Apr 1997, pp. 241–248.
- Stein, T.P. et al.: Energy Expenditure in Rhesus Monkeys (*Macaca mulatta*) during Spaceflight Using Doubly Labeled Water. Journal of Applied Physiology, vol. 81(1), Jul 1996, pp. 201–207.

C2229-8

- Bodine-Fowler, S.: Adaptive Response of Slow and Fast Skeletal Muscle in the Monkey to Spaceflight (Final Report). NASA CR-202120, 1996, 11 p.
- Bodine-Fowler, S.C. and D.J. Pierotti: Effect of Spaceflight on Muscle Fibers in the Rhesus Monkey (abstract). American Society for Gravitational and Space Biology Bulletin, 7(1), 1993, p. 96.
- Bodine-Fowler, S.C. et al.: Morphologic and Metabolic Properties of Single Muscle Fibers in Hindlimb Muscles of the Rhesus. Final Reports of the U.S. Experiments Flown on the Soviet Biosatellite Cosmos 2229, NASA TM-110439, Apr 1997, pp. 187–213.

†=Publication of related ground-based study

- Bodine-Fowler, S.C. et al.: Functional and Cellular Adaptation to Weightlessness in Primates. Journal of Gravitational Physiology, vol. 2(1), 1995, pp. P43–P46.

C2229-9

- Edgerton, V.R. et al.: Functional Neuromuscular Adaptation to Space Flight. Final Reports of the U.S. Experiments Flown on the Soviet Biosatellite Cosmos 2229, NASA TM-110439, Apr 1997, pp. 171–183.

C2229-10

- Cohen, B. et al.: Reduction of Ocular Counter-Rolling by Adaptation to Space. Final Reports of the U.S. Experiments Flown on the Soviet Biosatellite Cosmos 2229, NASA TM-110439, Apr 1997, pp. 111–130.
- Dai, M. et al.: Ocular Vergence Induced By Off-Vertical Axis Rotation (OVAR) before and after Spaceflight. Society for Neuroscience Abstracts, vol. 21(1–3), 1995, p. 137.
- Dai, M. et al.: Effects of Spaceflight on Ocular Counterrolling and the Spatial Orientation of the Vestibular System. Experimental Brain Research, vol. 102(1), 1994, pp. 45–56.
- Dai, M. et al.: Modulation of Ocular Vergence by Off-Vertical Yaw Axis Rotation in Monkeys: Normal Characteristics and Effects of Space Flight. Experimental Brain Research, vol. 111(1), 1996, pp. 21–29.
- Dai, M. et al.: Vestibular Adaptation to Space in Monkeys. Otolaryngology, Head and Neck Surgery, vol. 119(1), 1998, pp. 65–77.
- Dai, M. et al.: Modulation of Vergence by Off-vertical Yaw Axis Rotation in the Monkey: Normal Characteristics and Effects of Space Flight. Experimental Brain Research, vol. 111(1), 1996, pp. 21–29.
- Dai, M.J. et al.: Spatial Orientation of the Vestibular System: Dependence of Optokinetic after-Nystagmus on Gravity. Journal of Neurophysiology, vol. 66(4), Oct 1991, pp. 1422–1439.†

C2229-11

- Correia, M.J.: Studies of Vestibular Neurons in Normal, Hyper- and Hypogravity. Final Reports of the U.S. Experiments Flown on the Soviet Biosatellite Cosmos 2229, NASA TM-110439, Apr 1997, pp. 133–168.
- Correia, M.J. et al.: Filtering Properties of Vestibular Hair Cells: an Update. Annals of NY Academy of Science, vol. 781, Jun 19, 1996, pp. 138–149.†
- Correia, M.J. and D.G. Lang: An Electrophysiological Comparison of Solitary Type I and Type II Vestibular Hair Cells. Neuroscience Letters, vol. 116(1–2), Aug 14, 1990, pp. 106–111.†

† = Publication of related ground-based study

C2229-12

- Somps, C.J. et al.: Vestibular Afferent Response to Linear Accelerations in the Alert Squirrel Monkey. NASA TM-4581, 1994, p. 18.†
- Tomko, D.L. et al.: Adaptation to Microgravity of Oculomotor Reflexes (AMOR): Otolith-Ocular Reflexes. Final Reports of the U.S. Experiments Flown on the Soviet Biosatellite Cosmos 2229, NASA TM-110439, Apr 1997, pp. 292–351.
- Tomko, D.L. and G.D. Paige: Linear Vestibuloocular Reflex during Motion Along Axes Between Nasooccipital and Interaural. Annals of NY Academy of Science, vol. 656, 1992, pp. 233–241.†

GREENHOUSE1-1

- Bingham, G.E. et al.: Environmental Measurements Observed during the Greenhouse-2 Experiment on the Mir Orbital Station. 31st Scientific Assembly of COSPAR, Jul 1996, p. 364.
- Bingham, G.E. et al.: The Spacelab-Mir-1 "Greenhouse-2" Experiment. Advances in Space Research, vol. 18(4/5), 1996, pp. 225–232.†
- Bingham, G.E. et al.: The Spacelab-Mir-1 "Greenhouse" (abstract). 30TH COSPAR Scientific Assembly, Hamburg, Germany, Jul 11–21, 1994, p. 43.†
- Bingham, G.E. et al.: Diagnostic Equipment for the Greenhouse 2 Experiment on the Russian Space Station Mir. American Society for Gravitational and Space Biology Bulletin, vol. 8(1), 1994, p. 84.†
- Campbell, W.F. et al.: Comparison of Long-Term Storage in Chemical Fixatives on Morphology and Anatomy of Super-Dwarf Wheat. Hortscience, vol. 31(6), 1996, pp. 918–919.†
- Gillespie, L.S. et al.: Why Were Super-Dwarf Wheat Plants Grown in Space Station Mir Vegetative: Heat Shock, Short Day, or Microgravity? American Society for Gravitational and Space Biology Bulletin, vol. 10(1), p. 74.†
- Ivanova, T. et al.: From Fresh Vegetables To The Harvest of Wheat Plants Grown in the "SVET" Space Greenhouse Onboard the MIR Orbital Station. Journal of Gravitational Physiology, vol. 4(2), Jul 1997, pp. P71–P72.
- Jiang, L. et al.: Studies on Flower Initiation of Super-Dwarf Wheat under Stress Conditions Simulating Those on the Space Station, Mir. Journal of Plant Physiology, vol. 152, 1998, pp. 323–327.†
- Levinskikh, M.A. et al.: The Influence of Space Flight Factors on the Growth and Development of Super-Dwarf Wheat Cultivated in Greenhouse Svet. Aviakosmicheskaia i Ekologicheskaia Meditsina, vol. 33(2), 1999, pp. 37–41.
- Levinskikh, M.A. et al.: Peculiarities of Super-Dwarf Wheat Growth and Development in Greenhouse Svet in Ground and Space Experiments. 31st Scientific Assembly of COSPAR, Jul 1996, p. 364.
- Levinskikh, M.A. et al.: Cytoembryologic Studies of Super-Dwarf Wheat Grown in "Svet" Greenhouse in the Ground-Based Experiments (in Russian). Aviakosmicheskaia i Ekologicheskaia Meditsina, vol. 32(4), 1998, pp. 37–43.†

†=Publication of related ground-based study

- Mashinsky, A. et al.: "From Seed to Seed" Experiment With Wheat Plants under Space Flight Conditions. Advances in Space Research, vol. 14(11), 1994, pp. 13–19.
- Salisbury, F.B.: Developmental Studies of Wheat in Microgravity. 1992–1993 NASA Space Biology Accomplishments, NASA TM-4711, 1994, pp. 95–97.†
- Salisbury, F.B.: Growing Super-Dwarf Wheat in Space Station Mir. Life Support and Biosphere Science, vol. 4, 1997, pp. 155–166.
- Salisbury, F.B. et al.: Preparations for CELSS Flight Experiments with Wheat. Advances in Space Research, vol. 14(11), 1994, pp. 21–27.†
- Salisbury, F.B. et al.: Growing Super-Dwarf Wheat in Svet on MIR. Life Support and Biosphere Science, vol. 2(1), 1995, pp. 31–39.†
- Salisbury, F.B. et al.: Preparations for the "Greenhouse 2" Experiment on the Russian Space Station Mir. American Society for Gravitational and Space Biology Bulletin, vol. 8(1), 1994, p. 70.†
- Salisbury, F.B. et al.: Plant Growth during the Greenhouse II Experiment on the Mir Orbital Station. 31st Scientific Assembly of COSPAR, Jul 1996, p. 364.
- Salisbury, F.B. et al.: Ground-Based Studies with Super-Dwarf Wheat in Preparation for Space Flight. Journal of Plant Physiology, vol. 152, 1998, pp. 315–322.†
- Sychev, V.N. et al.: Evaluation of Super-Dwarf Wheat Growth and Development in Greenhouse "Svet" during Cultivation in Inhabited Pressurized Chamber (in Russian). Aviakosmicheskaia i Ekologicheskaia Meditsina, vol. 32(2), 1998, pp. 43–48.†

IML1-1

- Campbell, M. et al.: Ultrastructural Aspects of Chondrogenesis in "CELLS" Flight Hardware. Physiologist, vol. 35 (Suppl. 1), Feb 1992, pp. S39–40.†
- Duke, J.: Chondrogenesis in Micromass Cultures of Embryonic Mouse Limb Mesenchymal Cells Exposed to Microgravity (7-IML-1). First International Microgravity Laboratory Experiment Descriptions, T.Y. Miller, ed., NASA TM-4353, 1992, pp. 39–44.
- Duke, J. and D. Montufar-Solis: The Chondrocyte's Response to Load. In: Frontiers of Biological Science in Space: Molecular Mechanism of the Gravity Response in Cells, A. Sato, ed. Tokyo, Japan: Taiyo Printing, 1997 pp. 36–53.
- Duke, J. et al.: Continuing Studies of "CELLS" Flight Hardware. American Society For Gravitational and Space Biology Bulletin, vol. 2, Aug 1989, pp. 33–34.
- Duke, J. et al.: Continuing Studies of "CELLS" Flight Hardware. Physiologist, vol. 32 (Suppl. 1), Feb 1989, pp. S57–S58.†
- Duke, J., et al.: The "CELLS" Experiment: Tests of Prototype Hardware. American Society for Gravitational and Space Biology Bulletin, vol. 1, May 1988, p. 39.

†=Publication of related ground-based study

- Duke, P.J. et al.: Cartilage Formation in the CELLS "Double Bubble" Hardware. Physiologist, vol. 34 (Suppl. 1), 1991, pp. S76–S77.†
- Duke, P.J. et al.: Chondrocyte Topology and Matrix Production in the "CELLS" Spaceflight Experiment. American Society for Gravitational and Space Biology Bulletin, vol. 6(1), Oct 1992, p. 58.
- Duke, P.J. et al.: Studies of Chondrogenesis in Rotating Systems. Journal of Cellular Biochemistry, vol. 51(3), 1993, pp. 274–282.
- Duke, P.J. and D. Montufar-Solis: Exposure to Altered Gravity Affects All Stages of Endochondral Cartilage Differentiation. Advances in Space Research, vol. 24(6), 1999, pp. 821–827.
- Duke, P.J. and D. Montufar-Solis: Rotating Systems Used As Microgravity Simulators for Studies of Cartilage Differentiation. Japanese Journal of Aerospace and Environmental Medicine, vol. 35(2), 1998, pp. 41–54.
- Duke, P.J. et al.: Chondrogenesis in Cultures of Embryonic Mouse Limb Mesenchyme Exposed to Microgravity. In: BIORACK on Spacelab IML-1, C. Mattock, ed. Noordwijk, The Netherlands: European Space Agency SP-1162, 1995, pp. 115–127.
- Montufar-Solis, D. and P.J. Duke: Proteoglycans in Micromass Cultures of Embryonic Mouse Limb Mesenchymal Cells: Preliminary Studies for the "CELLS" Spaceflight Experiment. Physiologist, vol. 35 (Suppl. 1), Feb 1992, pp. S41–S42.†
- Montufar-Solis, D. and P.J. Duke: Proteoglycans in Micromass Cultures of Embryonic Mouse Limb Mesenchymal Cells: Preliminary Studies for the "CELLS" Spaceflight Experiment. Physiologist, vol. 34(4), Aug 1991, p. 221.

IML1-2

- Bruschi, C.: Microgra[illegible]tic[illegible]l Effects on Chromosome Behavior (7-IML-1). First International Microgravity Laboratory Experiment Descriptions, T.Y. Mille[illegible]d., NASA TM-4353, 1992, pp. 33–38.
- Esposito, M.S. and C.V Bruschi: Diploid Yeast Cells Yield Homozygous Spontaneous Mutations. Current Genetics, vol. 23(5–6), May–Jun 1993, pp. 430–434.†
- Bruschi, C.V. and M.S. Esposito: Cell Division, Mitotic Recombination and Onset of Meiosis by Diploid Yeast Cells during Space Flight. In: BIORACK on Spacelab IML-1, C. Mattock, ed. Noordwijk, The Netherlands: European Space Agency SP-1162, 1995, pp. 83–93.

IML1-3

- Brown, A. et al.: Plants' Tropistic Responses in Zero Gravity. 29th Plenary Meeting of COSPAR, 1992, p. 530.
- Brown, A.H.: Centrifuges: Evolution of Their Uses in Plant Gravitational Biology and New Directions for Research on the Ground and in Spaceflight. American Society for Gravitational and Space Biology Bulletin, vol. 5(2), Oct 1992, pp. 43–57.†
- Brown, A.H.: Circumnutations: from Darwin to Space Flights. Plant Physiology, vol. 101, 1993, pp. 345–348.†

† = Publication of related ground-based study

- Brown, A.H.: Gravitropic Responses of Plants in the Absence of a Complicating G-Force (6-IML-1). First International Microgravity Laboratory Experiment Descriptions, T.Y. Miller, ed., NASA TM-4353, 1992, pp. 3–12.
- Brown, A.H. and D.K. Chapman: Gravitropistic Responses of Oat Coleoptiles in Simulated Weightlessness Using Flight Hardware. American Society for Gravitational and Space Biology Bulletin, vol. 2, 1989, p. 62.
- Brown, A.H. et al.: Gravitropic Responses in Microgravity. American Society for Gravitational and Space Biology Bulletin, vol. 4(1), 1990, p. 104.
- Brown, A.H. et al.: Characterization of Precocious Seedling Development Observed during IML-1 Mission (abstract). American Society for Gravitational and Space Biology Bulletin, vol. 6(1), Oct 1992, p. 58.
- Brown, A.H. et al.: Growth Responses of Oat Seedlings in Space and on Clinostats (abstract). Plant Physiology, vol. 102(Suppl. 1), 1993, p. 119.†
- Brown, A.H. et al.: Clinorotation Is Not Always Equivalent to Weightlessness. American Society for Gravitational and Space Biology Bulletin, vol. 7(1), Oct 1993, p. 37.
- Brown, A.H. et al.: Gravitropic Responses of the *Avena* Coleoptile in Space and on Clinostats. I. Gravitropic Response Thresholds. Physiologia Plantarum, vol. 95(1), Sept. 1995, pp. 27–33.
- Brown, A.H. et al.: Gravitropic Responses of the *Avena* Coleoptile in Space and on Clinostats. IV. The Clinostat As a Substitute for Space Experiments. Physiologia Plantarum, vol. 98, 1996, pp. 210–214.
- Chapman, D.K. et al.: Detection of Apparent Autotropic Responses of Seedlings under Microgravity Conditions on IML-1. American Society for Gravitational and Space Biology Bulletin, vol. 6(1), Oct 1992, p. 59.
- Chapman, D.K. et al.: Gravitropically-Stimulated Seedlings Show Autotropism in Weightlessness. Physiologia Plantarum, vol. 90, 1994, pp. 157–162.
- Eidesmo, T. et al.: Tropistic Responses of *Avena* Seedlings in Simulated Hypogravity. Microgravity Science and Technology, vol. 4(3), 1991, pp. 199–206.†
- Heathcote, D.G. et al.: The Gravitational Plant Physiology Facility: Description of Equipment Developed for Biological Research in Spacelab. Microgravity Science and Technology, vol. 7(3), 1994, pp. 270–275.†
- Johnsson, A. et al.: Gravitropic Responses of the *Avena* Coleoptile in Space and on Clinostats. II. Is Reciprocity Valid? Physiologia Plantarum, vol. 95(1), Sept 1995, pp. 34–38.
- Johnsson, A. et al.: Gravity Sensing in Oat Coleoptiles: Scatter in Growth Orientation under Different G-conditions. Plant Cell and Environment, vol. 16, 1993, pp. 749–754.
- Karlsson, C. et al.: Gravitropic Responses of the *Avena* Coleoptile in Space and on Clinostats. III. Hypogravity Effects on Coleoptile Curvatures. Physiologia Plantarum, vol. 98, 1996, pp. 325–332.

† = Publication of related ground-based study

IML1-4

- Brown, A. et al.: Plants' Tropistic Responses in Zero Gravity. 29th Plenary Meeting of COSPAR, 1992, p. 530.
- Chapman, D.K. et al.: Detection of Apparent Autotropic Responses of Seedlings under Microgravity Conditions on IML-1. American Society for Gravitational and Space Biology Bulletin, vol. 6(1), Oct 1992, p. 59.
- Heathcote, D.G and B.W. Bircher: Enhancement of Phototropic Response to a Range of Light Doses in *Triticum aestivum* Coleoptiles in Clinostat-Simulated Microgravity. Planta, vol. 170, 1987, pp. 249–256.†
- Heathcote, D.G. et al.: The Phototropic Response to *Triticum aestivum* Coleoptiles under Conditions of Low Gravity. Plant Cell and Environment, vol. 18(1), 1995, pp. 53–60.
- Heathcote, D.G. et al.: The Occurrence of Spontaneous Growth Curvatures in Wheat Coleoptiles Grown at 0 G on the IML Mission (abstract). American Society for Gravitational and Space Biology Bulletin, vol. 6(1), Oct 1992, p. 50.
- Heathcote, D.G. et al.: Evidence of Circumnutation in Wheat Coleoptiles under Microgravity Conditions on the IML-1 Mission. American Society for Gravitational and Space Biology Bulletin, vol. 6(1), Oct 1992, p. 88.
- Heathcote, D.G. et al.: FOTRAN: An Experiment to Investigate the Effects of Phototropic Stimulations on the Growth Movements of Wheat Seedlings Using the Gravitational Plant Physiology Facility on the IML-1 Spacelab Mission. American Society for Gravitational and Space Biology Bulletin, vol. 4(1), 1990, p. 56.
- Heathcote, D.G. et al.: Nastic Curvatures of Wheat Coleoptiles That Develop in True Microgravity. Plant Cell and Environment, vol. 18(7), Jul 1995, pp. 818–822.
- Heathcote, D.G. et al.: The Gravitational Plant Physiology Facility: Description of Equipment Developed for Biological Research in Spacelab. Microgravity Science and Technology, vol. 7(3), 1994, pp. 270–275.†
- Johnson, C.F. et al.: Infrared Light-Emitting Diode Radiation Causes Gravitropic and Morphological Effects in Dark-Grown Oat Seedlings. Photochemistry and Photobiology, vol. 63(2), 1996, pp. 238–242.
- Rudolph, I.L. et al.: Development of Space Flight Experiments: I. Biocompatibility Testing—the IML Experience (abstract). American Society for Gravitational and Space Biology Bulletin, vol. 6(1), Oct 1992, p. 47.†

IML1-5

- Johnson, T.E. and G.A Nelson: *Caenorhabditis elegans*: a Model System for Space Biology Studies. Experimental Gerontology, vol. 26(2–3), 1991, pp. 299–309.†
- Nelson, G.A.: Genetic and Molecular Dosimetry of HZE radiation (7-IML-1). First International Microgravity Laboratory Experiment Descriptions, T.Y. Miller, ed., NASA TM-4353, 1992, pp. 25–31.

†=Publication of related ground-based study

- Nelson, G.A.: Radiation in Microgravity. Handbook of Physiology, M.J. Fregly and C.M. Blatteis, eds., Section 4, vol. 2, 1996. New York: Oxford University Press, pp. 785–798.
- Nelson, G.A. et al: Development and Chromosome Mechanics in Nematodes: Results from IML-1. Advances in Space Research, vol. 14(8), 1994, pp. 209–214.
- Nelson, G.A. et al. Genetic and Molecular Dosimetry of HZE Radiation. In: BIORACK on Spacelab IML-1, C. Mattock, ed. Noordwijk, The Netherlands: European Space Agency SP-1162, 1995, pp. 41–50.
- Nelson, G.A. et al.: Nematode Radiobiology and Development in Space. Results from IML-1. Fifth European Symposium on Life Sciences Research in Space, European Space Agency SP- 366, 1994, pp. 187–191.
- Nelson, G.A. et al.: Radiation Effects in Nematodes: Results from IML-1 Experiments. Advances in Space Research, vol. 14(10), Oct 1994, pp. 87–91.

IML2-1

- Schaefer, R.L. et al.: International Cooperation in the Development of Space Flight Experiments: IML-2 and NIZEMI Experiment Cuvettes (abstract). American Society for Gravitational and Space Biology Bulletin, vol. 7(1), Oct 1993, p. 50.†
- Spangenberg, D. et al.: Effects of Weightlessness on *Aurelia* Budding and Ephyra Development (abstract). American Society for Gravitational and Space Biology Bulletin, vol. 9(1), Oct 1995, p. 88.
- Spangenberg, D.B. et al.: Hair Cell and Statocyst Differentiation in *Aurelia* Ephyrae Which Developed in Microgravity. American Society for Gravitational and Space Biology Bulletin, vol. 10(1), 1996, p. 34.
- Spangenberg, D.B. et al.: Touch-Plate and Statolith Formation in Graviceptors of Ephyrae Which Developed While Weightless in Space. Scanning Microscopy, vol. 10(3), 1996, pp. 875–888.
- Spangenberg, D.B. et al.: Effects of Weightlessness on *Aurelia* Budding and Ephyra Development. Proceedings of the Sixth International Conference on Coelenterate Biology, Noordwijkerhout, the Netherlands, Nationaal Natuurhistorisch Museum, Leiden, 1997, pp. 447–453.

IML2-2

- Chee, O.K. et al.: AAEU on IML-2: a New Space Hardware for Experiments Using Aquatic Animals (abstract). American Society for Gravitational and Space Biology Bulletin, vol. 7(1), Oct 1993, p. 86.†
- Gao, W. et al.: Development of the Endolymphatic Sac and Duct in the Japanese Red-Bellied Newt *Cynops pyrrhogaster*. Hearing Research, vol. 118(1–2), 1998, pp. 62–72.†
- Gao, W. et al.: Production of Otoconia in the Endolymphatic Sac in the Japanese Red-Bellied Newt *Cynops pyrrhogaster*: Light and Transmission Electron Microscopy Study. Acta Otolaryngologica, vol. 118(4), 1998, pp. 540–548.†

† = Publication of related ground-based study

- Gao, W. et al.: Ultrastructure of the Endolymphatic Sac in the Larva of the Japanese Red-Bellied Newt *Cynops pyrrhogaster*. Cell and Tissue Research, vol. 291(3), 1998, pp. 549–559.†
- Hallworth, R.J. et al.: Atomic Force Microscope Observations of Otoconia in the Newt. Hearing Research, vol. 85(1–2), 1995, pp. 115–121.†
- Koike, H. et al.: Formation of Otolith during the Development of Japanese Red-Bellied Newt, *Cynops pyrrhogaster*. Proceedings of the Tenth Space Utilization Symposium, vol. 7, 1993, pp. 92–95.
- Koike, H. et al.: Non-Invasive Assessment of Otolith Formation during Development of the Japanese Red-Bellied Newt, *Cynops pyrrhogaster*. Hearing Research, vol. 88(1–2), 1995, pp. 206–214.
- Mogami, I. et al.: Astronewt: Early Development of Newt in Space. Advances in Space Research, vol. 17(6/7), 1996, pp. 257–263.
- Nakamura, K. et al.: Formation and Development of Otolith under Microgravity. Proceedings of the Eleventh Space Utilization Symposium, 1994, pp. 138–141.
- Nakamura, K. and M.L. Wiederhold: Imaging Technological Analysis of Otolith and Bone Development under Microgravity Exposure Using Newt Larvae. Journal of Aerospace and Environmental Medicine, vol. 33, 1996, pp. 161–174.
- Nishimura, K. et al.: Contribution: Fundamental Study for Quantitative Analysis of Otolith and Bone Change in IML-2—Effect of Anesthetic (MS-222) Procedure under the Magnification Radiography. Proceedings of the Eleventh Space Utilization Symposium, 1994, pp. 135–137.
- Steyger, P.S. et al.: The Morphogenic Features of Otoconia during Larval Development of *Cynops pyrrhogaster*, the Japanese Red-Bellied Newt. Hearing Research, vol. 84, 1995, pp. 61–71.†
- Steyger, P.S. and M.L. Wiederhold: Extracellular Matrix Secretion during the Development of the Newt Otolithic Maculae. American Society for Gravitational and Space Biology Bulletin, vol. 8(1), 1994, p. 44.†
- Steyger, P.S. and M.L. Wiederhold: Visualization of Newt Aragonitic Otoconial Matrices Using Transmission Electron Microscopy. Hearing Research, vol. 92(1/2), 1996, pp. 184–191.†
- Steyger, P.S. et al.: The Developmental Expression of Otoconia (abstract). American Society for Gravitational and Space Biology Bulletin, vol. 7(1), Oct 1993, p. 48.†
- Steyger, P.S. et al.: Otoconial Polymorph Expression during Larval Development of *Cynops pyrrhogaster*, the Japanese Red-Bellied Newt. Abstracts of the Seventeenth Midwinter Research Meeting of the Association for Research in Otolaryngology, vol. 17, 1994, p. 37.
- Wiedehold, M. et al.: Developmental Changes in the Vestibular System of Imori. Proceedings of the Ninth Space Utilization Symposium in Tokyo, vol. 9, 1992, pp. 127–131.
- Wiederhold, M. et al.: Development of Vertebrate Otoconia and Molluscan Statolith/Statoconia: Crystallography Determined with Fourier Transform Infrared Spectroscope. Abstracts of the Eighteenth Midwinter Research Meeting of the Association for Research in Otolaryngology, vol. 18, 1995, p. 100.

†=Publication of related ground-based study

- Wiederhold, M.L.: Early Development of a Gravity-Receptor Organ in Microgravity. 1992–1993 NASA Space Biology Accomplishments, T.W. Halstead, ed., NASA TM-4711, 1994, pp. 267–269.
- Wiederhold, M.L.: Development of Gravity-Sensing Organs in Microgravity. American Society for Gravitational and Space Biology Bulletin, vol. 10(1), 1996, p. 4.
- Wiederhold, M.L. et al.: Development of Gravity-Sensing Organs in Altered Gravity. Gravitational Space Biology Bulletin, vol. 10(2), Jun 1997, pp. 91–96.
- Wiederhold, M.L. et al.: Otolith Systems in Newt Larvae Reared in Microgravity on IML-2. American Society for Gravitational and Space Biology Bulletin, vol. 9(1), Oct 1995, p. 88.
- Wiederhold, M.L. et al.: Development of Otoliths and Endolymphatic Otoconia in Newt Larvae Reared in Microgravity. Abstracts of the Nineteenth Midwinter Research Meeting of the Association for Research in Otolaryngology, vol. 19, 1996, p. 145.
- Wiederhold, M.L. et al.: Non-Invasive Assessment of Otoliths in Newt Larvae (abstract). American Society for Gravitational and Space Biology Bulletin, vol. 7(1), Oct 1993, p. 64.†
- Wiederhold, M.L. et al.: Behavior of Newt Larvae in Hyper- and Hypogravity during Parabolic Flight (abstract). American Society for Gravitational and Space Biology Bulletin, vol. 6(1), Oct 1992, p. 66.†
- Wiederhold, M.L. et al.: Development of Gravity-Sensing Organs in Altered Gravity Conditions: Opposite Conclusions from an Amphibian and a Molluscan Preparation. Journal of Gravitational Physiology, vol. 4(2), Jul 1997, pp. P51–P54.
- Wiederhold, M.L. et al.: Developmental Changes of Otoconial Crystallography in Newt Larvae. American Society for Gravitational and Space Biology Bulletin, vol. 8(1), Oct 1994, p. 7.†
- Wiederhold, M.L. et al.: Development of Crystallographic Forms of Otoconia in Newt Larvae. Association for Research in Otolaryngology Midwinter Research Abstract, vol. 17, 1994, p. 38.
- Wiederhold, M.L. et al.: Development of the Gravity-Sensing Organs in the Japanese Red-Bellied Newt, *Cynops pyrrhogaster*. Proceedings of the Eighteenth International Symposium on Space Technology and Science, vol. 18, 1992, pp. 2103–2108.
- Wiederhold, M.L. et al.: Formation of Otoconia in the Japanese Red-Bellied Newt, *Cynops pyrrhogaster*. Advances in Space Research, vol. 14(8), 1994, pp. 327–330.
- Wiederhold, M.L. et al.: Development of the Otolith Organs and Semicircular Canals in the Japanese Red-Bellied Newt, *Cynops pyrrhogaster*. Hearing Research, vol. 84(1–2), April 1995, pp. 41–51.†
- Yamashita, M. et al.: Preparatory Work for Astronewt Experiment Proceedings of the Ninth Space Utilization Symposium in Tokyo, vol. 9, 1992, pp. 132–134.

† = Publication of related ground-based study

IML Publications

IML2-3

- Krikorian, A.D.: Gravity and the Stability of the Differentiated State of Plant Somatic Embryos. Second International Microgravity Laboratory (IML-2) Final Report, NASA RP-1405, 1997, pp. 168–169.
- Krikorian A.D.: Space Stress and Genome Shock in Developing Plant Cells. Physiologia Plantarum, vol. 98(4), 1996, pp. 901–908.

IMMUNE1-1

- Chapes, S.K. et al.: Effects of Spaceflight and PEG-IL-2 on Rat Physiological and Immunological Responses. Journal of Applied Physiology, vol. 86(6), 1999, pp. 2065–2076.

IMMUNE2-1

- Chapes, S.K. et al.: Effects of Spaceflight and PEG-IL-2 on Rat Physiological and Immunological Responses. Journal of Applied Physiology, vol.86(6), 1999, pp. 2065–2076.

Incubator1-4 & 2-4

- Fermin, C.D. et al.: Otoconia Biogenesis, Phylogeny, Composition & Functional Attributes. Histology and Histopathology, vol. 13(4), 1998, pp. 1103–1154.†
- Fermin, C.D. et al.: Color Threshold and Ratio of S100β, MAP5, NF68/200, GABA and GAD.1. Distribution in Inner Ear Afferents. Cell Vision, vol. 4(5), 1997, pp. 280–297.†
- Hara, H. et al.: Chicken (*Gallus domesticus*) Inner Ear Afferents. Primary Sensory Neuron, vol. 2(4), 1998, pp. 253–274.†

Incubator1-6 & 2-6

- Hester, P.Y. and K. Boda: Egg Rotation during Avian Embryogenesis (abstract). American Society for Gravitational and Space Biology Bulletin, vol. 11(1), 1997, p. 28.†
- Hester, P.Y. et al.: Effect of Preflight Activities and Launch Dynamics on Avian Embryogenesis. American Society for Gravitational and Space Biology Bulletin, vol. 12(1), 1998, p. 64.†
- Hester, P.Y. et al.: Egg Rotation during Avian Embryogenesis. Folia Veterinaria. (In Press)†

Incubator1-7 & 2-7

- Henry, M.K. et al.: Mechanical Loading during Launch of a Space Vehicle Affects Blood Vessel Formation in the Quail Chorioallantoic Membrane. Angiogenesis Journal. (In Press)†

†=Publication of related ground-based study

NIH.C1-1

- Boskey, A.L. et al.: The Effect of Spaceflight on Bone and Cartilage Cell Differentiation. Fifth International Conference on the Chemistry and Biology of Mineralized Tissues, Kohler, Wisconsin, Oct, 1995.
- Globus, R.K et al.: Integrin-Extracellular Matrix Interactions in Connective Tissue Remodeling and Osteoblast Differentiation. American Society for Gravitational and Space Biology Bulletin, vol. 8(2), Oct 1995, pp. 19–28.†
- Malouvier, A. et al.: Gravity Regulates Glucose and Lactate Metabolism in Cultured Osteoblasts. American Society for Gravitational and Space Biology Bulletin, vol. 9(1), Oct 1995, p. 28.

NIH.C1-2

- Gerstenfeld, L.C. and W.J. Landis: Gene Expression and Formation of Extracellular Matrix in a Primary Osteoblast Culture System. American Society for Gravitational and Space Biology Bulletin, vol. 7(1), 1993, p. 30.
- Landis, W.J. et al.: The Effect of Microgravity on Embryonic Chick Bone Cells: Results from STS-59 (NIH.C1). AIAA/NASA Life Sciences and Space Medicine Conference, 1994, pp. 75–76.
- Landis, W.J. et al.: Spaceflight Effects on Cultured Embryonic Chick Bone Cells. Journal of Bone and Mineral Research. (In Press)
- Landis, W.J. et al.: Initial Biochemical and Microscopic Results Obtained from Embryonic Chick Bone Cells Flown during NASA Shuttle Mission STS-59 (NIH.C1) (abstract). American Society for Gravitational and Space Biology Bulletin, vol. 8(1), 1995, p. 50.

NIH.C2-1

- Doty, S.B. et al.: The Effect of Space Flight on Bone and Cartilage Cell Differentiation. Fifth International Conference on Mineralized Tissues, Oct 1995.

NIH.C2-2

- Chromiak, J.A. et al.: Developmental Studies for Examining the Effects of Microgravity on Skeletal Myofibers in the Space Tissue Loss (STL) Module. American Society for Gravitational and Space Biology Bulletin, vol. 8(1), 1994, p.11.
- Chromiak, J.A. and H.H. Vandenburgh: Regulation of Skeletal Muscle Protein Turnover *In Vitro* by Anabolic/Androgenic Steroids (abstract). American Society for Gravitational and Space Biology Bulletin, vol. 7(1), Oct 1993, p. 98.†
- Vandenburgh, H. et al.: Space Travel Directly Induces Skeletal Muscle Atrophy. FASEB Journal, vol. 13(9), 1999, pp.1031–1038.
- Vandenburgh, H. et al.: Space Flight Induces Atrophy of Tissue Cultured Skeletal Myofibers (abstract). American Society for Gravitational and Space Biology Bulletin, vol. 9(1), Oct 1995, p. 62.
- Vandenburgh, H.H. et al.: Initial International Space Station (ISS) Definition Studies for Examining the Effects of Long Term Space Travel on Tissue Cultured Mammalian Skeletal Myofibers. American Society for Gravitational and Space Biology Bulletin, vol. 10(1), 1996, p. 29.

†=Publication of related ground-based study

- Vandenburgh, H.H. et al.: Insulin-like Growth Factor-1 As an Anabolic Regulator of Tension-Induced Skeletal Muscle Growth (abstract). American Society for Gravitational and Space Biology Bulletin, vol. 6(1), Oct 1992, p. 93.†
- Vandenburgh, H.H. et al.: Computer Aided Mechanogenesis of Skeletal Muscle Organs from Single Cells *In Vitro*. NASA CR-187025, 1990, p. 21.†
- Vandenburgh, H.H., et al.: Computer-Aided Mechanogenesis of Skeletal Muscle Organs from Single Cells *In Vitro*. FASEB Journal, vol. 5(13), Oct 1991, pp. 2860–2867.†

NIH.C3-1

- Kunisada, T. et al.: Effects of Simulated Microgravity on Human Osteoblast-Like Cells in Culture. Acta Medica Okayama, vol. 51(3), Jun 1997, pp. 135–140.†
- Malouvier, A. et al.: Gravity Regulates Glucose and Lactate Metabolism in Cultured Osteoblasts. American Society for Gravitational and Space Biology Bulletin, vol. 9(1), Oct 1995, p. 28.

NIH.C3-2

- Landis, W.J.: An Overview of Vertebrate Mineralization with Emphasis on Collagen-Mineral Interaction (abstract). American Society for Gravitational and Space Biology Bulletin, vol. 12(1), 1998, p. 4.
- Landis, W.J. et al.: Presence of Non-Collagenous Proteins in Bone Cell Cultures Flown on STS-63 (abstract). American Society for Gravitational and Space Biology Bulletin, vol. 11, 1997, p. 71.

NIH.C3-3

- Anderson, L.H. et al.: Immunofluorescent Staining Patterns of Spaceflown (STS-45 and STS-63) Non-Fusing L8 Myoblast Variant Cells (abstract). American Society for Gravitational and Space Biology Bulletin, vol. 9(1), Oct 1995, p. 62.
- Kulesh, D.A. et al.: Space Shuttle Flight (STS-45) of L8 Myoblast Cells Results in the Isolation of Non-Fusing Cell Line Variant. Journal of Cellular Biochemistry, vol. 55(4), 1994, pp. 530–544.

NIH.C4-2

- Harris, S.A. et al.: Effects of Spaceflight on Human Fetal Osteoblastic Cell Gene Expression and Physiology. Journal of Bone and Mineral Research, vol. 11 (Suppl. 1), 1996, p. PM339.

NIH.R1-1

- Johnson, R.B.: The Bearable Lightness of Being: Bones, Muscles, and Spaceflight. Anatomical Record, vol. 253(1), Feb 1998, pp. 24–27.

†=Publication of related ground-based study

- Johnson, R.B. and S.E. Abel: Comparison of Effects of Spaceflight on Hindlimb and Forelimb Bones. American Society for Gravitational and Space Biology Bulletin, vol. 10, 1996, p. 59.
- Johnson, R.B. et al.: Effect of Spaceflight on the Structure of the Fibula. FASEB Journal, vol. 10(3), 1996, p. 4354.
- Johnson, R.B. et al.: Atrophy of the Fibula Occurs Coincident to Spaceflight. Journal of the Mississippi Academy of Sciences, vol. 10, 1996, p. 61.
- Johnson, R.B. et al.: Effects of Spaceflight on the Attachment of Tendons to Bone. American Society for Gravitational and Space Biology Bulletin, vol. 9(1), 1995, p. 97.
- Parsell, D.E. et al.: Effects of Spaceflight on Rat Femoral Density. Journal of the Mississippi Academy of Sciences, vol. 10, 1996, p. 63.
- Price, C.A. et al.: Effects of Spaceflight on the Insertion of the Soleus Muscle. Journal of Dental Research, vol. 77, 1998, p. 214.

NIH.R1-2

- Serova, L.V.: Simulation Models of Weightlessness in Mammalian's Developmental Program. Journal of Gravitational Physiology, vol. 5(1), 1998, pp.127–128.
- Serova, L.V. et al.: Effect of Weightlessness on the Mother-Fetus System (Results of Embyrological Experiment NIH-R1 aboard the "Space Shuttle") (in Russian). Aviakosmicheskaia i Ekologicheskaia Meditsina, vol. 30(6), 1996, pp. 4–8.
- Serova, L.V. et al.: NIH.R1: The Effect of Microgravity on Embryonic Electrolytes and Skeleton (abstract). American Society for Gravitational and Space Biology Bulletin, vol. 9(1), Oct 1995, p. 97.

NIH.R1-3

- Renegar, R.H. et al.: Morphological and Functional Parameters of Placentas from Rat Dams Flown on the NIH.R1 Study. American Society for Gravitational and Space Biology Bulletin, vol. 9(1), Oct 1995, p. 98.

NIH.R1-4

- Alberts, J.R. et al.: Sampling Both Prenatal and Postnatal Offspring from Individual Rat Dams Enhances Animal Utilization Without Compromising Development. Contemporary Topics in Laboratory Animal Science, vol. 35(6), 1996, pp. 61–65.
- Alberts, J.R. and A.E. Ronca: Behavior of Pregnant Rats in Space: A Key to Interpreting Spaceflight Effects on Perinates. Developmental Psychobiology, vol. 30(3), 1997, p. 240.
- Alberts, J.R. and A.E. Ronca: Rat Pregnancy and Parturition Survive Spaceflight Challenge: New Considerations of Developmental Consequences. Journal of Gravitational Physiology, vol. 4(2), Jul 1997, pp. P55-P58.
- Alberts, J.R.: Maternal Behavior and Offspring Development of NIH.R1 Rats. American Society for Gravitational and Space Biology Bulletin, vol. 9(1), Oct 1995, p. 96.

† = Publication of related ground-based study

- Alberts, J.R. et al.: Video Images of Vestibular Tests of Postnatal Rats Gestated during Spaceflight (abstract). American Society for Gravitational and Space Biology Bulletin, vol. 9(1), Oct 1995, p. 84.
- Alberts, J.R. et al.: Vestibular Tests of Postnatal Rats Gestated during Spaceflight. Developmental Psychobiology, vol. 29(3), 1996, p. 278.
- Ronca, A.E. and J.R. Alberts: Altered Vestibular Function in Fetal and Newborn Rats Gestated in Space. Journal of Gravitational Physiology, vol. 4(2), Jul 1997, pp. P63–P66.
- Ronca, A.E. et al.: Spaceflight Effects on Rodent Pregnancy and Parturition (abstract). American Society for Gravitational and Space Biology Bulletin, vol. 9(1), Oct 1995, p. 84.
- Ronca, A.E. et al.: Pregnancy and Parturition of Rat Dams Flown on the Space Shuttle. Developmental Psychobiology, vol. 29(3), 1996, p. 73.

NIH.R1-5

- Hoath, S.B. et al.: Effects of Spaceflight and Readaptation on Epidermal Barrier Development in the Fetal Rat. American Society for Gravitational and Space Biology Bulletin, vol. 9(1), 1995, p. 98.

NIH.R1-6

- Saveliev, S. et.al.: The Effect of Weightlessness on Developing Neuro-Endocrine System in Rats (in Russian). Aerospace and Environmental Medicine, vol. 32(2), 1998, p. 31–36.
- Serova, L.V. et al.: Effect of Weightlessness on the Mother-Fetus System (Results of Embyrological Experiment NIH-R1 aboard the "Space Shuttle") (in Russian). Aviakosmicheskaia i Ekologicheskaia Meditsina, vol. 30(6), 1996, pp. 4–8.
- Serova, L.V. et al.: NIH.R1: The Effect of Microgravity on Embryonic Electrolytes and Skeleton (abstract). American Society for Gravitational and Space Biology Bulletin, vol. 9(1), Oct 1995, p. 97.

NIH.R1-7

- Sonnenfeld, G.: Immune Responses in Space Flight. International Journal of Sports Medicine, vol. 19 (Suppl. 3), 1998, pp. S195–S204.
- Sonnenfeld, G. et al.: Spaceflight and Development of Immune Responses. Journal of Applied Physiology, vol. 85(4), 1998, pp. 1429–1433.
- Sonnenfeld, G. et al.: Spaceflight and Development of Immune Responses (abstract). American Society for Gravitational and Space Biology Bulletin, vol. 9(1), Oct 1995, p. 97.
- Sonnenfeld, G.: Spaceflight and Development of Immune Responses (Final Report). Washington, DC: NASA Headquarters, 202602, 1996, p. 7.
- Taylor, G.R. et al.: Changes in the Immune System during and after Spaceflight. Advances in Space Biology and Medicine, vol. 6, 1997, pp. 1–32.

† = Publication of related ground-based study

NIH.R1-8

- Serova, L.V. et al.: Effect of Weightlessness on the Mother-Fetus System (Results of Embyrological Experiment NIH-R1 aboard the "Space Shuttle") (in Russian). Aviakosmicheskaia i Ekologicheskaia Meditsina, vol. 30(6), 1996, pp. 4–8.
- Serova, L.V. et al.: NIH.R1: The Effect of Microgravity on Embryonic Electrolytes and Skeleton (abstract). American Society for Gravitational and Space Biology Bulletin, vol. 9(1), Oct 1995, p. 97.

NIH.R1-9

- Brown, D. et al.: Characterization of Skeletal Muscle Atrophy Induced in Stimulated Microgravity Culture Systems. *In Vitro* Cellular and Developmental Biology, vol. 31(3), 1995, p. 2.†
- Clark, K.I. et al.: NIH.R1 Results: Development of Thigh Muscles during Spaceflight. American Society for Gravitational and Space Biology Bulletin, vol. 9(1), 1995, p. 98.

NIH.R1-10

- DeSantis, M. et al.: Quantitative Observations on the Structure of Selected Proprioceptive Components in Adult Rats That Underwent Half of Their Fetal Development in Space. Twelfth Man in Space Symposium Abstracts, 1997, pp. 272–273.
- DeSantis, M. et al.: Proprioceptors in Skeletal Muscle of Rats That Developed *In Utero* aboard the Space Shuttle Atlantis. Journal of the Idaho Academy of Science, vol. 32(1), 1996, p. 13.
- DeSantis, M.E. et al.: Two Motor Horizons—Walking and Eye Opening—Are Unaffected by Prenatal Exposure to Near-Zero Gravity. American Society for Gravitational and Space Biology Bulletin, vol. 9(1), 1995, p. 96.
- Hines, J. and M. DeSantis: Size of Vestibular Nuclei in Rats after Prenatal Development in Microgravity. Journal of the Idaho Academy of Science, vol. 32(1), 1996, p. 27.
- Parkman, K. et al.: Locomotor Behavior of Rats after Exposure to the Conditions of Space Flight. Journal of the Idaho Academy of Science, vol. 31(1), 1995, pp. 34–35.
- Wong, A. et al.: Gender, More Than Space Flight during Part of Gestation Influences Postnatal Weight Gain in Rats. American Society for Gravitational and Space Biology Bulletin, vol. 9(1), 1995, p. 10.
- Wong, A.M. and M. DeSantis: Rat Gestation during Space Flight: Outcomes for Dams and Their Offspring Born after Return to Earth. Integrative Physiological and Behavioral Science, vol. 32(4), 1997, pp. 322–342.

NIH.R1-11

- Bruce, L.L. and B. Fritzsch: The Development of Vestibular Connections in Rat Embryos in Microgravity. Journal of Gravitational Physiology, vol. 4(2), Jul 1997, pp. P59–P62.

†=Publication of related ground-based study

- Fritzsch, B. and L.L. Bruce: Utricular and Saccular Projections of Fetal Rats Raised in Normal Gravity and Microgravity. American Society for Gravity and Space Biology Bulletin, vol. 9(1), 1995, p. 97.
- Nichols, D.H. et al.: Incomplete Target Segregation of Facial, Vestibular and Cochlear Efferents in Rodents. Society of Neuroscience Abstracts, vol. 21(1–3), 1995, p. 1040.

NIH.R1-12

- Davet, J. et al.: Choroidal Readaptation to Gravity in Rats after Spaceflight and Head-Down Tilt. Journal of Applied Physiology, vol. 84(1), Jan 1998, pp. 19–29.
- Davet, J. et al.: Cardiac Atrial Natriuretic Peptide (ANP) in Rat Dams and Fetuses Developed in Space (NIH-R1 and NIH-R2 Experiments). Life Sciences, vol. 64(17), 1999, pp. 1533–1541.
- Davet, J. et al.: NIH-R1 Mission: Effects of a 11-Day Spaceflight on Rat Brain and Heart Natriuretic System in Fetuses, Pups and Dams (abstract). American Society for Gravitational and Space Biology Bulletin, vol. 9(1), Oct 1995, p. 84.
- Gabrion, J. et al.: NIH-R1 Mission: Effects of a 11-Day Spaceflight on the Fetal Development of Choroidal Plexus in Rats (abstract). American Society for Gravitational and Space Biology Bulletin, vol. 9(1), Oct 1995, p. 96.
- Main-Ponset, L. et al.: Effects of an 11-Day Spaceflight on the Structure and Function of Choroid Plexus in Developing Rats. Developmental Brain Research, vol. 99(2), 1997, pp. 187–200.

NIH.R1-13

- Borchert, M. et al.: Morphometric Refinement of Retinotectal Connections in the Rat. Investigative Opthalmology and Visual Science, vol. 35(4), 1994, p. 1771.†
- Lambert, J.L. et al.: Investigation of Optic Nerve Development Using Neuronal Tracing Dyes. SPIE Proceedings, vol. 2137, Jan 22–28, 1994, pp. 49–55.†

NIH.R2-1

- Davis, B.A. et al.: Collagenase and Tissue Plasminogen Activator Production in Developing Rat Calvariae: Normal Progression Despite Fetal Exposure to Microgravity. Calcified Tissue International, vol. 63(5), Nov 1998, pp. 416–422.

NIH.R2-2

- Davet, J. et al.: Cardiac Atrial Natriuretic Peptide (ANP) in Rat Dams and Fetuses Developed in Space (NIH-R1 and NIH-R2 Experiments). Life Sciences, vol. 64(17), 1999, pp. 1533–1541.
- Davet, J. et al.: NIH-R1 Mission: Effects of a 11-Day Spaceflight on Rat Brain and Heart Natriuretic System in Fetuses, Pups and Dams (abstract). American Society for Gravitational and Space Biology Bulletin, vol. 9(1), Oct 1995, p. 84.

† =Publication of related ground-based study

NIH.R2-3

- Hoban-Higgins, T.M. et al.: Development of Circadian Rhythms of Body Temperature and Activity in Sprague-Dawley Rat Pups. Society for Neuroscience, vol. 21, 1995, pp. 955.
- Murakami, D.M. et al.: The Development of the Photic Induction of C-FOS in the Retina and SCN. Society for Neuroscience Abstracts, vol. 21(1–3), 1995, pp. 956.†
- Murakami, D.M. et al.: The Effect of Spaceflight on Retino-Hypothalamic Tract Development. Journal of Gravitational Physiology, vol. 4(2), 1997, pp. 67–70.

NIH.R2-4

- Alberts, J.R. and A.E. Ronca: Behavior of Pregnant Rats in Space: A Key to Interpreting Spaceflight Effects on Perinates. Developmental Psychobiology, vol. 30(3), 1997, p. 240.
- Alberts, J.R. and A.E. Ronca: Rat Pregnancy and Parturition Survive Spaceflight Challenge: New Consideration of Developmental Consequences. Journal of Gravitational Physiology, vol. 4(2), Jul 1997, pp. P55–P58.
- Alberts, J.R. et al.: Video Images of Vestibular Tests of Postnatal Rats Gestated during Spaceflight (abstract). American Society for Gravitational and Space Biology Bulletin, vol. 9(1), Oct 1995, p. 84.
- Alberts, J.R. et al.: NIH.R2 Spaceflight Effects on Rat Parturition and Offspring Vestibular Function. American Society for Gravitational and Space Biology Bulletin, vol. 10(1), 1996, p. 29.
- Fejtek, M. et al.: The Effects of Spaceflight on the Abdominal Musculature of the Rat (abstract). Journal of Morphology, vol. 232(3), Jun 1997, p. 254.
- Plaut, K. et al.: Mammary Metabolism is Altered in Pregnant Rats Subjected to Spaceflight (NIH.R2). American Society for Gravitational and Space Biology Bulletin, vol. 10(1), 1996, p. 32.
- Ronca, A.E. and J.R. Alberts: Vestibular Function in Perinatal Rats Gestated in Microgravity. Developmental Pyschobiology, vol. 30(3), 1997, p. 261.
- Ronca, A.E. and J.R. Alberts: Altered Vestibular Function in Fetal and Newborn Rats Gestated in Space. Journal of Gravitational Physiology, vol. 4(2), Jul 1997, pp. P63–P66.
- Ronca, A.E. et al.: Spaceflight Effects on Rodent Pregnancy and Parturition (abstract). American Society for Gravitational and Space Biology Bulletin, vol. 9(1), Oct 1995, p. 84.
- Ronca, A.E. et al.: Pregnancy and Parturition of Rat Dams Flown on the Space Shuttle. Developmental Psychobiology, vol. 29(3), 1996, p. 73.

† = Publication of related ground-based study

NIH.R2-6

- Fejtek, M. and R.J. Wassersug: Effects of Laparotomy, Cage Type, Gestation Period and Spaceflight on Abdominal Muscles of Pregnant Rodents. Journal of Experimental Zoology, vol. 284(3), 1999, pp. 252–264.
- Fejtek, M. and R.J. Wassersug: A Survey of How Spaceflight Affects Rodent Skeletal Muscle. Advances in Space Biology and Medicine, vol. 7, 1999, pp. 1–30.

PARE1-1

- Henriksen, E.J. et al.: Elevated Interstitial Fluid Volume in Soleus Muscles Unweighted by Spaceflight or Suspension. Journal of Applied Physiology, vol. 75(4), 1993, pp. 1650–1653.
- Tischler, M.E. et al.: Spaceflight on STS-48 and Earth-Based Unweighting Produce Similar Effects on Skeletal Muscle of Young Rats. Journal of Applied Physiology, vol. 74(5), 1993, pp. 2161–2165.

PARE2-1

- Bikle, D.D. et al.: Alendronate Preserves Bone Mass during Skeletal Unloading (abstract). American Society for Gravitational and Space Biology Bulletin, vol. 7(1), Oct 1993, p. 36.†
- Bikle, D.D. et al.: Impact of Skeletal Unloading on Bone Formation: Role of Systemic and Local Factors. Acta Astronautica, vol. 33, 1994, pp. 119–129.†
- Bikle, D.D. et al.: The Molecular Response of Bone to Growth Hormone during Skeletal Unloading: Regional Differences. Endocrinology, vol. 136(5), May 1995, pp. 2099–2109.†
- Bikle, D.D. et al.: Altered Skeletal Pattern of Gene Expression in Response to Spaceflight and Hindlimb Elevation. American Journal of Physiology, vol. 267(6:1), Dec 1994, pp. E822–E827.
- Bikle, D.D. et al.: Skeletal Unloading Induces Resistance to Insulin Like Growth Factor I. Journal of Bone Mineral Research, vol. 9, 1994, pp. 1789–1796.†
- Bikle, D.D. et al.: Expression of the Genes for the Insulin Like Growth Factors and Their Receptors in Bone during Skeletal Growth. American Journal of Physiology, vol. 267(2·1), 1994, pp. E278–E286.†
- Bikle, D.D. et al.: Alendronate Increases Skeletal Mass of Growing Rats during Unloading by Inhibiting Resorption of Calcified Cartilage. Journal of Bone and Mineral Research, vol. 9(11), 1994, pp. 1777–1787.†
- Dehority, W. et al.: Bone and Hormonal Changes Induced by Skeletal Unloading in the Mature Male Rat. American Journal of Physiology, vol. 276(1 Pt 1), 1999, pp. E62–E69.

† = Publication of related ground-based study

- Halloran, B.P. et al.: Skeletal Unloading Induces Selective Resistance to the Anabolic Actions of Growth Hormone on Bone. Journal of Bone and Mineral Research, vol. 10(8), Aug 1995, pp. 1168–1176.†
- Halloran, B.P. et al.: Skeletal Unloading Decreases Production of 1,25 Dihydroxyvitamin D. American Journal of Physiology, vol. 264(5 Pt 2), 1993, pp. E712–E716.†
- Halloran, B.P. et al.: Regional Responsiveness of the Tibia to Intermittent Administration of Parathyroid Hormone As Affected by Skeletal Unloading. Journal of Bone Mineral Research, vol. 12(7), Jul 1997, pp. 1068–1074.†
- Kostenuik, P.J. et al.: Skeletal Unloading Inhibits the *In Vitro* Proliferation and Differentiation of Rat Osteoprogenitor Cells. American Journal of Physiology, vol. 273(6 Pt 1), Dec 1997, pp. E1133–E1139.†
- Kostenuik, P.J. et al.: Skeletal Unloading Causes Resistance of Osteoprogenitor Cells to Parathyroid Hormone and to Insulin-Like Growth Factor-I. Journal of Bone Mineral Research, vol. 14(1), 1999, pp. 21–31.

PARE2-2

- Thapar, K. et al.: Effects of Spaceflight on Morphology of the Rat Adenohypophysis. Journal of Applied Physiology, vol. 77(3), Sep 1994, pp. 1411–1420.

PARE2-3

- Miller, E.S. et al.: Influence of Antiorthostatic Suspension on Resistance to Murine Listeria Monocytogenes Infection (abstract). American Society for Gravitational and Space Biology Bulletin, vol. 6(1), Oct 1992, p. 41.†
- Miller, E.S. et al.: Influence of Spaceflight on the Production of Interleukin-3 and Interleukin-6 by Rat Spleen and Thymus Cells. Journal of Applied Physiology, vol. 78(3), Mar 1995, pp. 810–813.
- Sonnenfeld, G. and E.S. Miller: Space Flight and Humoral and Cellular Immunity of Animals. Physiologist, vol. 36(Suppl. 1), 1993, pp. S68–70.

PARE2-4

- Baldwin, K.M. et al.: Contractile Properties of Slow Skeletal Muscle following a 6 Day Spaceflight Mission (abstract). American Society for Gravitational and Space Biology Bulletin, vol. 7(1), Oct 1993, p. 99.
- Baldwin, K.M. et al.: Altered Protein and mRNA Expression of Myosin Heavy Chain Isoforms following Spaceflight (abstract). American Society for Gravitational and Space Biology Bulletin, vol. 7(1), Oct 1993, p. 79.
- Caiozzo, V.J. et al.: Effect of Spaceflight on Skeletal Muscle: Mechanical Properties and Myosin Isoform Content of a Slow Muscle. Journal of Applied Physiology, vol. 76(4), April 1994, pp. 1764–1773.
- Caiozzo, V.J. et al.: Functional and Cellular Adaptations of Rodent Skeletal Muscle to Weightlessness. Journal of Gravitational Physiology, vol. 2(1), 1995, pp. P39–P42.

† = Publication of related ground-based study

- Vailas, A.C.: Connective Tissue Plasticity to Limb Unloading and Microgravity (abstract). American Society for Gravitational and Space Biology Bulletin, vol. 7(1), Oct 1993, p. 73.

PARE2-5

- Lee, M.D. et al.: Effect of Spaceflight on Oxidative and Antioxidant Enzyme Activity in Rat Diaphragm and Intercostal Muscles. Journal of Gravitational Physiology, vol. 2(1), 1995, pp. 68–69.

PARE2-6

- Zhu, X. and D.M. Desiderio: Effects of Space Flight Stress on Proopiomelanocortin, Proenkephalin A, and Tachykinin Neuropeptidergic Systems in the Rat Posterior Pituitary. Life Sciences, vol. 55(5), 1994, pp. 347–350.

PARE3-1

- Evans, G.L. et al.: Spaceflight Has Compartment Specific Effects on mRNA Levels for Bone Matrix Proteins and Bone Matrix Production in Rat Femur. Journal of Bone Mineral Research, vol. 11(Suppl. 1), 1996, p. S270.
- Evans, G.L. et al.: Spaceflight Has Compartment and Gene Specific Effects on mRNA Levels for Bone Matrix Proteins in Rat Femur. Gravitational and Space Biology Bulletin, vol. 11(1), 1997, p. 71.
- Garetto, L.P. et al.: Recovery of Osteoblast Histogenesis in Rat Periodontal Ligament following a 9-Day Spaceflight (PARE.03). American Society for Gravitational and Space Biology Bulletin, vol. 8(1), 1994, p. 51.
- Morey-Holton, E.R. et al.: The Skeleton and Its Adaptation to Gravity. Handbook of Physiology: Environmental Physiology, vol. 1, 1996, pp. 691–719.
- Wade, C.E. et al.: Body Mass Change during Altered Gravity: Spaceflight, Centrifugation, and Return to 1G. Journal of Gravitational Physiology, vol. 4(3), 1997, pp. 43–48.
- Westerlind, K.C. et al.: The Skeletal Response to Reloading following Weightlessness. Transactions of the 40th Annual Meeting, Orthopedic Research Society, vol. 19, 1994, p. 561.
- Westerlind, K.C. et al.: The Skeletal Response to Reloading following Weightlessness: Time and Tissue Dependent Changes in TGF-β Expression. American Society for Gravitational and Space Biology Bulletin, vol. 8(1), Oct 1994, p. 50.

PARE3-2

- Becker, R.F. et al.: The Effect of Hypergravity (2G) on Osteoblast Percursor Cells in Rat Periodontal Ligament. American Society for Gravitational and Space Biology Bulletin, vol. 8(1), 1994, p. 88.†
- Garetto, L.P. et al.: Recovery of Osteoblast Histogenesis in Rat Periodontal Ligament following a 9-Day Spaceflight (PARE.03). American Society for Gravitational and Space Biology Bulletin, vol. 8(1), 1994, p. 51.

†=Publication of related ground-based study

- Jennermann, C. et al.: A Comparison of Bromodeoxyuridine and 3H-Thymidine Labeling of S-Phase Cells in Rat Mandibular Condyle. American Society for Gravitational and Space Biology Bulletin, vol. 7, 1993, p. 80.†
- Jennermann, C. et al.: Comparison of Labeling Methods and Embedding Media for Localization of S-Phase Osteogenic Cells. Journal of Histotechnology, vol. 20(1), 1997, pp. 39–44.†

PHCF-1

- Hymer, W.C. et al.: Experimental Modification of Rat Pituitary Growth Hormone Cell Function during and after Spaceflight. Journal of Applied Physiology, vol. 80(3), Mar 1996, pp. 955–970.
- Hymer W.C. et al.: Feeding Frequency Affects Cultured Rat Pituitary Cells in Low Gravity. Journal of Biotechnology, vol. 47(2–3), 1996, pp. 289–312.
- Hymer, W.C. et al.: Experimental Modification of Rat Pituitary Prolactin Cell Function during and after Spaceflight. Journal of Applied Physiology, vol. 80(3), Mar 1996, pp. 971– 980.
- Hymer, W.C. et al.: Pituitary Cells in Space. Advances in Space Research, vol. 14(8), 1994, pp. 61–70.
- Salada, T. et al.: Rat Pituitary Prolactin (PRL) Cells Are Sensitive to Microgravity: STS-46 Results (abstract). American Society for Gravitational and Space Biology Bulletin, vol. 7(1), Oct 1993, p. 32.

PSE2-1

- Borkowski, G.L. et al.: Laboratory Animals in Space Life Science Research. AWIC Newsletter, vol. 6, 1995, pp. 1–7.
- Seedor, J.G. et al.: Effects of FOSAMAX Treatment on Femora of Rats Exposed to Microgravity for Ten Days (abstract). The Twelfth International Conference On Calcium Regulating Hormones, Melbourne, Australia, Bone 16(Suppl. 1), 1995, p. 182S .

PSE2-2

- Backup, P. et al.: Spaceflight Results in Reduced mRNA Levels for Tissue-Specific Proteins in the Musculoskeletal System. American Journal of Physiology, vol. 266(4 Pt 1), April 1994, pp. E567–573.
- Turner, R.T. et al.: Spaceflight Results in Depressed Cancellous Bone Formation in Rat Humeri. Aviation, Space, and Environmental Medicine, vol. 66(8), 1995, pp. 770–774.

PSE3-1

- Bolton, L. et al.: Tissue Repair in Space. Wounds, vol. 9, 1997, pp. 127–142.
- Davidson, J.M. et al.: Sustained Microgravity Reduces Intrinsic Wound Healing and Growth Factor Responses in the Rat. FASEB Journal. vol. 13(2), Feb 1999, pp. 325–329.

† =Publication of related ground-based study

- Davidson, J.M. et al.: Intrinsic Wound Healing and Growth Factor Responses in the Rat Reduced by Sustained Microgravity in Earth Orbit (abstract). Fourth Annual Meeting of the European Tissue Repair Society, Oxford, England, 1994, p. 70.
- Grove, D.S. et al.: The Effects of a 10-Day Space Flight on the Function, Phenotype and Adhesion Molecule Expression of Splenocytes and Lymph Node Lymphocytes. Experimental Cell Research, vol. 219(1), 1995, pp. 102–109.
- Staron, R.S. et al.: Comparison of Soleus Muscles from Rats Exposed to Microgravity for 10 Versus 14 Days. Histochemistry and Cell Biology, vol. 110, 1998, pp. 73–80.

PSE3-2

- Westerlind, K.C. and R.T. Turner : The Skeletal Effects of Spaceflight in Growing Rats: Tissue-Specific Alterations in mRNA Levels for TGF-β. Journal of Bone and Mineral Research, vol. 10(6), 1995, pp. 843–848.

PSE4-1

- Day, J.R. et al.: Effects of Microgravity and Bone Morphogenetic Protein II on GFAP in Rat Brain. Journal of Applied Physiology, vol. 85(2), 1998, pp. 716–722.
- Staron, R.S. et al.: Comparison of Soleus Muscles from Rats Exposed to Microgravity for 10 Versus 14 Days. Histochemistry and Cell Biology, vol. 110(1), 1998, pp. 73–80.

PSE4-2

- Cavolina, J.M. et al.: The Effects of Orbital Spaceflight on Bone Histomorphometry and Messenger Ribonucleic Acid Levels for Bone Matrix Proteins and Skeletal Signaling Peptides in Ovariectomixed Growing Rats. Endocrinology, vol. 138(4), 1997, pp. 1567–1576.
- Westerlind, K.C. et al.: Estrogen Regulates the Rate of Bone Turnover But Bone Balance in Ovariectomized Rats Is Modulated by Prevailing Mechanical Strain. Proceedings of the National Academy of Sciences United States of America, vol. 94(4), 1997, pp. 4199–4204.
- Zhang, M. and R.T. Turner: The Effects of Spaceflight on mRNA Levels for Cytokines in Proximal Tibia of Ovariectomized Rats. Aviation Space and Environmental Medicine, vol. 69(7), Jul 1998, pp. 626–629.

SLJ-1

- Black, S. et al.: Regulative Development of *Xenopus laevis* in Microgravity. Advances in Space Research, vol. 17(6/7), 1996, pp. 209–217.
- Fejtek, M. et al.: Swimming Kinematics and Respiratory Behavior of *Xenopus laevis* Larvae Raised in Altered Gravity. Journal of Experimental Biology, vol. 201(12), 1998, pp. 1917–1926.
- Pronych, S.P. et al.: Optomotor Behaviour in *Xenopus laevis* Tadpoles As a Measure of the Effect of Gravity on Visual and Vestibular Neural Integration. Journal of Experimental Biology, vol. 199(12), 1996, pp. 2689–2701.

†=Publication of related ground-based study

- Souza, K.A. et al.: Amphibian Development in the Virtual Absence of Gravity. Proceedings of the National Academy of Sciences United States of America, vol. 92(6), 1995, pp. 1975–1978.

SLJ-2

- Cowings, P.S. and W.B. Toscano: Autogenic-Feedback Training (AFT) As a Preventative Method for Space Motion Sickness: Background and Experimental Design. NASA TM-108780, 1993.†
- Cowings, P.S. and W.B. Toscano: Monitoring and Correcting Human Autonomic Function during Long-Term Adaptation to Microgravity. The Annual Meeting of the American Autonomic Society and Clinical Autonomic Research Society, Toronto, vol. 6(5), Oct 1996, p. 305.
- Cowings, P.S. et al.: Autogenic-Feedback Training: a Potential Treatment for Post-Flight Orthostatic Intolerance in Aerospace Crews. NASA TM-108785, 1993.
- Cowings, P.S. et al.: Autogenic-Feedback Training: a Potential Treatment for Post-Flight Orthostatic Intolerance in Aerospace Crews. Journal of Clinical Pharmacology, vol. 34(6), 1994, pp. 599–608.
- Cowings, P.S. et al.: Autogenic-Feedback Training: a Potential Treatment for Post-Flight Orthostatic Intolerance in Aerospace Crews (abstract). Clinical Autonomic Research, vol. 4, 1994, p. 197.
- Cowings, P.S. et al.: Preflight Autogenic-Feedback Training for the Control of Motion Sickness: Spacelab-J (abstract). Aviation, Space, and Environmental Medicine, vol. 64(5), May 1993, p. 431.
- Kellar, M.A. et al.: Autogenic-Feedback Training Improves Pilot Performance during Emergency Flying Conditions. NASA TM-104005, March 1993.†
- Stout, C.S. and P.S. Cowings: Increasing Accuracy in the Assessment of Motion Sickness: a Construct Methodology. NASA TM-108797, 1993.†
- Stout, C.S. et al.: Reliability of Autonomic Responses and Malaise Across Multiple Motion Sickness Stimulation Tests. NASA TM-108787, vol. 7, 1993.†
- Toscano, W.B. and P.S. Cowings: Heart Rate Variability of Humans in Space (abstract). Aviation, Space, and Environmental Medicine, vol. 64(5), May 1993, p. 430.
- Toscano, W.B. and P.S. Cowings: The Effects of Autogenic-Feedback Training on Motion Sickness Severity and Heart Rate Variability in Astronauts. NASA TM-108840, 1994.
- Toscano, W.B. and P.S. Cowings: Heart Rate Variability during Early Adaptation to Space (abstract). Clinical Autonomic Research, vol. 4(4), 1994, p. 220.
- Toscano, W.B. et al.: Autonomic Responses to Microgravity. Clinical Autonomic Research, vol. 4(4), 1994, p. 220.

†=Publication of related ground-based study

SL-J Publications

SLJ-3

- Krikorian, A.D.: Space Stress and Genome Shock in Developing Plant Cells. Physiologia Plantarum, vol. 98(4), 1996, pp. 901–908.
- Krikorian, A.D. et al.: Experiment PCR: Plant Cell Research Experiment on Spacelab J Mission. Mitotic Disturbances in Daylily (*Hemerocallis*) Somatic Embryos after an 8-Day Spaceflight. Final Science Results: Spacelab J, NASA SP-525, 1995, pp. 49–50.
- Krikorian, A.D. et al.: Mitotic Disturbances in Daylily (*Hemerocallis*) Somatic Embryos after an 8-Day Spaceflight (abstract). American Society for Gravitational and Space Biology Bulletin, vol. 7(1), 1993, p. 38.

SLS1-1

- Bakulin, A.V. and E.R. Morey-Holton: Bone Biomechanics. Spacelab Life Sciences-1 Final Report, NASA TM-4706, Aug 1995, p. 31.

SLS1-2

- Kaplansky, A.S. et al.: Metabolic and Structural Changes in Bone and Systems Regulating Bone Growth and Metabolism. Spacelab Life Sciences-1 Final Report, NASA TM-4706, Aug 1995, p. 31.

SLS1-3

- Garetto, L.P. et al.: Preliminary Analysis of Rat Periodontal Ligament Osteoblast Histogenesis from SLS-1 (abstract). American Society for Gravitational and Space Biology Bulletin, vol. 6(1), Oct 1992, p. 58.
- Morey-Holton, E. et al.: Biomineralization and Spaceflight (abstract). American Society for Gravitational and Space Biology Bulletin, vol. 6(1), Oct 1992, p. 99.
- Morey-Holton, E.R. and S.B. Arnaud: Skeletal Response to Spaceflight. NASA TM-103890, 1991.
- Morey-Holton, E.R. et al.: Alendronate Inhibits Cortical Bone Formation and Does Not Protect Cortical Bone during Skeletal Unloading (abstract). American Society for Gravitational and Space Biology Bulletin, vol. 7(1), Oct 1993, p. 48.†
- Morey-Holton, E.R. et al.: The Skeleton and Its Adaptation to Gravity. In: Handbook of Physiology: Environmental Physiology, C.M. Blatteis and M.J. Fregly, eds., vol. 1, 1996, pp. 691–719.†
- Tanner, S. and E. Morey-Holton: Changes in the Proximal Femur during Spaceflight (abstract). American Society for Gravitational and Space Biology Bulletin, vol. 6(1), Oct 1992, p. 88.

SLS1-4

- Oganov, V.S. et al.: Osteogenesis: Tissue Factors of Regulation. Spacelab Life Sciences-1 Final Report, NASA TM-4706, Aug 1995, p. 32.

†=Publication of related ground-based study

SLS1-5

- Spangenberg, D. et al.: Haircell and Statocyst Differentiation in *Aurelia* Ephyrae Which Developed in Microgravity (abstract). American Society for Gravitational and Space Biology Bulletin, vol. 10(1), Oct 1996, p. 34.
- Spangenberg, D. and F. Lattanzio: Computer-Assisted Videoanalysis of Pulsing/Swimming Behavior of *Aurelia* Ephyrae from the SLS-1 Mission. American Society for Gravitational and Space Biology Bulletin, vol. 8(1), Oct 1994, p. 48.
- Spangenberg, D.B.: Rhopalium Development in *Aurelia aurita* Ephyrae. Hydrobiologia, vol. 216–217, June 28, 1991, pp. 45–49.†
- Spangenberg, D.B.: Effects of Microgravity on Jellyfish Development and Behavior (abstract). American Society for Gravitational and Space Biology Bulletin, vol. 6(1), Oct 1992, p. 100.
- Spangenberg, D.B. et al.: Development Studies of *Aurelia* (Jellyfish) Ephyrae Which Developed during the SLS-1 Mission. Advances in Space Research, vol. 14(8), 1994, pp. 239–247.
- Spangenberg, D.B. et al.: Graviceptor Development in Jellyfish Ephyrae in Space and on Earth. Advances in Space Research, vol. 14(8), 1994, pp. 317–325.
- Spangenberg, D.B. et al.: Effects of Weightlessness on *Aurelia* Budding and Ephyra Development. American Society for Gravitational and Space Biology Bulletin, vol. 9, 1995, p. 88.

SLS1-6

- Heim, J.M. et al.: ANF-Sensitive Guanylyl Cyclase Activity in Rat Liver Tissues Flown on SLS-1. In: Fifth European Symposium on Life Sciences Research in Space, H. Oser and T.D. Guyenne, comps. European Space Agency SP-366, 1994, pp. 35–36.

SLS1-7

- Grindeland, R.E. et al.: Metabolic Responses to Head-Down Suspension in Hypophysectomized Rats. Journal of Applied Physiology, vol. 75(6), Dec 1993, pp. 2718–2726.†
- Grindeland, R.E. et al.: Metabolic and Thermoregulatory Responses to Head Down Suspension of Hypophysectomized Rats (abstract). American Society for Gravitational and Space Biology Bulletin, vol. 6(1), Oct 1992, p. 35.†
- Hymer, W.C. and R.E. Grindeland: The Pituitary: Aging and Spaceflown Rats. Experimental Gerontology, vol. 26(2–3), 1991, pp. 257–265.

SLS1-8

- Smirnov, K.V. et al.: Mechanisms of Changes in the Exocrine Functions of the Pancreas. Spacelab Life Sciences-1 Final Science Report, NASA TM-4706, Aug 1995, p. 33.

†=Publication of related ground-based study

SLS Publications

SLS1-9

- Dalton, B.P. et al.: Spacelab Life Sciences-1 Final Report, NASA TM-4706, Aug 1995.

SLS1-10

- Dalton, B.P. et al.: Spacelab Life Sciences-1 Final Report , NASA TM-4706, Aug 1995.

SLS1-11

- Udden, M.M. et al.: Blood Volume and Erythropoiesis in the Rat during Spaceflight. Aviation, Space, and Environmental Medicine, vol. 66(6), Jun 1995, pp. 557–561.

SLS1-12

- Allebban, Z. et al.: Effects of Spaceflight on the Number of Rat Peripheral Blood Leukocytes and Lymphocyte Subsets. Journal of Leukocyte Biology, vol. 55(2), Feb 1994, pp. 209–213.
- Udden, M.M. et al.: Blood Volume and Erythropoiesis in the Rat during Spaceflight. Aviation, Space, and Environmental Medicine, vol. 66(6), Jun 1995, pp. 557–561.

SLS1-13

- Konstantinova, I.V. et al.: Effect of Spaceflight Factors on the Functional Activity of Immune Cells. Spacelab Life Sciences-1 Final Report, NASA TM-4706, Aug 1995, pp. 33–34.

SLS1-14

- Popova, I.A. et al.: Lipid Peroxidation and Antioxidant Protection System. Spacelab Life Sciences-1 Final Report, NASA TM-4706, Aug 1995, p. 32.

SLS1-15

- Smirnov, K.V. et al.: Mechanism of Development of the Hypersecretory Syndrome of the Stomach. Spacelab Life Sciences-1 Final Report, NASA TM-4706, Aug 1995, p. 33.

SLS1-16

- Smirnov, K.V. et al.: Study of the Digestion-Transport Conveyor in the Small Intestine. Spacelab Life Sciences-1 Final Report, NASA TM-4706, Aug 1995, p. 33.

SLS1-17

- Szylit, O. et al.: Influence of Microgravity on Different Metabolic Potentials of Intestinal Microflora. In: Fifth European Symposium on Life Sciences Research in Space, H. Oser and T.D. Guyenne, comps. 1993 Sept 26–Oct 1; Noordwijk, The Netherlands: European Space Agency, 1994, pp. 433–438.

†=Publication of related ground-based study

SLS1-18

- Baldwin K.M.: Factors Regulating Cardiac Myosin Expression and Intrinsic Contractile Function. Report of the Workshop on Research in the Microgravity Environment Related to Cardiovascular, Pulmonary, and Blood Functions and Diseases. Bethesda, MD: National Heart, Lung, and Blood Institute, 1994, pp. 13–16.
- Baldwin, K.M. and G.R. Adams: Interaction of Hindlimb Unweighting and Creatine Depletion with Myosin Expression (abstract). American Society for Gravitational and Space Biology Bulletin, vol. 7(1), Oct 1993, p. 98.†
- Baldwin, K.M. et al.: Interaction of Various Mechanical Activity Models in Regulation of Myosin Heavy Chain Isoform Expression. Journal of Applied Physiology, vol. 74(5), May 1993, pp. 2517–2522.†
- Baldwin, K.M. et al.: Myosin Heavy Chain Expression in Rodent Skeletal Muscle: Effects of Exposure to Zero Gravity. Journal of Applied Physiology, vol. 75(6), Dec 1993, pp. 2471–2477.
- Baldwin, K.M. et al.: Substrate Oxidation Capacity in Rodent Skeletal Muscle: Effects of Exposure to Zero Gravity. Journal of Applied Physiology, vol. 75(6), Dec 1993, pp. 2466–2470.

SLS1-20

- Ogaiov, V.S. et al.: Contractility Properties of Skeletal Muscles. Spacelab Life Sciences-1 Final Report, NASA TM-4706, Aug 1995, pp. 35–36.

SLS1-21

- Krippendorf, B.B. and D.A. Riley: Distinguishing Unloading- Versus Reloading-Induced Changes in Rat Soleus Muscle. Muscle and Nerve, vol. 16(1), Jan 1993, pp. 99–108.†
- Riley, D.A.: Inflight and Postflight Changes in Skeletal Muscles of Rats Flown in NASA Spacelabs and Cosmos Biosatellites. COSPAR Abstracts, 1996.
- Riley, D.A. et al.: Postflight Changes in Muscles of Rats Flown 9 Days aboard SLS-1 (abstract). American Society for Gravitational and Space Biology Bulletin, vol. 6(1), Oct 1992, p. 99.
- Riley, D.A. et al.: Inflight and Postflight Changes in Skeletal Muscles of SLS-1 and SLS-2 Spaceflown Rats. Journal of Applied Physiology, vol. 81(1), 1996, pp. 133–144.
- Riley, D.A. and B.B. Krippendorf: Increased Ubiquitin Conjugates in Reloaded Atrophied Adductor Longus (AL) Muscles of Rats. American Society for Gravitational and Space Biology Bulletin, vol. 6(1), Oct 1992, p. 34.†
- Riley, D.A. and B.B. Krippendorf: Temporal Changes in Sarcomere Lesions of Rat Adductor Longus Muscles during Hindlimb Reloading. Anatomical Record, vol. 238(3), Mar 1994, pp. 304–310.†

† = Publication of related ground-based study

- Riley, D.A. et al.: Rat Hindlimb Unloading: Soleus Histochemistry, Ultrastructure, and Electromyograpy. Journal of Applied Physiology, vol. 69(1), Jul 1990, pp. 58–66.†
- Riley, D.A. et al.: Spaceflight and Reloading Effects on Rat Hindlimb Skeletal Muscles. American Society for Gravitational and Space Biology Bulletin, vol. 7(1), Oct 1993, p. 81.
- Thompson, J.L. et al.: Sarcomere Lesions in Suspension Unloaded Muscle after Eccentric Contractions. American Society for Gravitational and Space Biology Bulletin, vol. 7(1), Oct 1993, p. 48.†

SLS1-22

- Dyachkova, L.N. and O.H. Lowry: Cerebral Cortex Ultrastructure. Spacelab Life Sciences-1 Final Report, NASA TM-4706, Aug 1995, p. 35.

SLS1-23

- Gershtein, L.M. et al.: Cytochemistry of Neurons. Spacelab Life Sciences-1 Final Report, NASA TM-4706, Aug 1995, p. 35.

SLS1-24

- Poliakov, I.V. et al.: Histochemistry and Morphology of the Anterior Horns of Spinal Cord in Rats after 9-Day Spaceflight. Aviakosmicheskaia i Ekologicheskaia Meditsina, vol. 29(1), 1995, pp. 30–32.

SLS1-25

- Krasnov, I.B. and N.G. Daunton: Brain Primary Perceptive Structures: Their Morphology and Histochemistry. Spacelab Life Sciences 1 Final Report, NASA TM-4706, Aug 1995, p. 34.

SLS1-26

- Krasnov, I.B.: Spinal Cord: Morphology and Histochemistry. Spacelab Life Sciences-1 Final Report, NASA TM-4706, Aug 1995, p. 36.

SLS1-27

- Leontovich, T.A. et al.: Morphology of Neurons of the Cerebral Cortex. Spacelab Life Sciences-1 Final Report, NASA TM-4706, Aug 1995, p. 36.

SLS1-28

- Leontovich, T.A. et al.: Morphology of Neurons. Spacelab Life Sciences-1 Final Report, NASA TM-4706, Aug 1995, pp. 34–35.

SLS1-29

- Daunton, N.G. et al.: Effects of Chronic Hyper-Gravity on the Righting Reflex and Vestibular End Organ Morphology in the Rat (abstract). Society for Neuroscience Abstracts, vol. 17(1), 1991, p. 316.†

†=Publication of related ground-based study

- Lange, R.D. et al.: Effects of Microgravity and Increased Gravity on Bone Marrow of Rats. Aviation, Space, and Environmental Medicine, vol. 65(8), Aug 1994, pp. 730–735.
- Ross, M.D.: Synaptic Plasticity in Utricular Maculas of Rats Exposed to Microgravity (abstract). American Society for Gravitational and Space Biology Bulletin, vol. 6(1), Oct 1992, p. 100.
- Ross, M.D.: Morphological Changes in Rat Vestibular System following Weightlessness. Journal of Vestibular Research, vol. 3(3), Fall 1993, pp. 241–251.
- Ross, M.D.: Spaceflight Study of Synaptic Plasticity in Adult Rat Vestibular Maculas. Acta Otolaryngologica Supplement, vol. 516, 1994, pp. 1–14.
- Ross, M.D.: Synaptic Changes in Gravity Sensors of Space-Flown Animals. Proceedings of the 14th Annual International Conference of the IEEE Engineering in Medicine and Biology Society, vol. 14, 1992, pp. 1304–1305.
- Ross, M.D.: Morphological Changes in Rat Vestibular System following Weightlessness. Proceedings of the Barany Society, Symposium on Space Research, Prague, vol. 3(3), 1993, pp. 241–251.
- Ross, M.D.: Synaptic Changes in Rat Maculae in Space and Medical Imaging: the Link. Otolaryngology and Head and Neck Surgery, vol. 118(3 Pt 2), Mar 1998, pp. S25–S28.
- Ross, M.D. et al.: Computer-Assisted Three-Dimensional Reconstruction and Simulations of Vestibular Macular Neural Connectivities. Annals of New York Academy of Sciences, vol. 656, May 22, 1992, pp. 75–91.†

SLS1-30

- Fagette, S. et al.: Effects of a Short Term Hindlimb Suspension on Central and Peripheral Norepinephrine Turnover in Rats. Life Sciences, vol. 53, 1993, pp. 555–561.†
- Fagette, S. et al.: Sympathetic Nervous Activity and Cardiovascular Variability after a 3-Day Tail Suspension in Rats. European Journal of Applied Physiology, vol. 69(6), 1994, pp. 480–487.†
- Fareh, J. et al.: Norepinephrine Content in Discrete Brain Areas and Neurohypophysial Vasopressin in Rats after a 9-Day Spaceflight (SLS-1). Aviation, Space, and Environmental Medicine, vol. 64(6), June 1993, pp. 507–511.
- Fareh, J. et al.: Central and Peripheral Norepinephrine Turnover after Hindlimb Suspension in the Rat. Aviation, Space, and Environmental Medicine, vol. 64(5), May 1993, pp. 386–391.†
- Fareh, J. et al.: Comparison of the Effects of Spaceflight and Hindlimb-Suspension on Rat Pituitary Vasopressin and Brainstem Norepinephrine Content. Advances in Space Research, vol. 14(8), 1994, pp. 365–371.

†=Publication of related ground-based study

- Herbuté, S. et al.: ANP Binding Sites Are Increased in Choroid Plexus of SLS-1 Rats after 9 Days of Spaceflight. Aviation, Space, and Environmental Medicine, vol. 65(2), Feb 1994, pp. 134–138.
- Hughson, R.L. and C. Gharib: Variability and Cardiovascular Homeostasis. Journal of Gravitational Physiology, vol. 2(1), 1995, pp. P123–P126.†

SLS1-31

- Gabrion, J. et al.: Choroidal Responses in Microgravity. (SLS-1, SLS-2 and Hindlimb-Suspension). Acta Astronautica, vol. 36(8–12), 1995, pp. 439–448.
- Herbuté, S. et al.: ANP Binding Sites Are Increased in Choroid Plexus of SLS-1 Rats after 9 Days of Spaceflight. Aviation, Space, and Environmental Medicine, vol. 65(2), 1994, pp. 134–138.

SLS1-32

- West, J.B. et al.: Effects of Spaceflight on Lung Ultrastructure. Spacelab Life Sciences-1 Final Report, NASA TM-4706, Aug 1995, p. 80.

SLS1-33

- Serova, L.V. et al.: Weightlessness Effect on Water and Electrolytes in the Animal Body. Spacelab Life Sciences-1 Final Report, NASA TM-4706, Aug 1995, p. 36.

SLS2-1

- Lafage-Proust, M.H. et al.: Space-Related Bone Mineral Redistribution and Lack of Bone Mass Recovery after Reambulation in Young Rats. American Journal of Physiology, vol. 274 (2 Pt. 2), Feb 1998, pp. R324–334.
- Vico, L. and C. Alexandre: Normalisation of Bone Cellular Responses Occurs between 7 and 14 Days of Simulated Weightlessness in Rats. Physiologist, vol. 32 (Suppl. 1), 1989, pp. S25–S26.†
- Vico, L. and C. Alexandre: Microgravity and Bone Adaptation at the Tissue Level. Journal of Bone Mineral Research, vol. 7 (Suppl. 2), Dec 1992, pp. S445–S447.
- Vico, L. and C. Alexandre: Adaptation of the Skeleton to Microgravity (in French). Revue du Rhumatisme Edition Française, vol. 61(11), Dec 1994, pp. 853–857.
- Vico, L. et al.: Effects of Gravitational Changes on the Bone System *In Vitro* and *In Vivo*. Bone, vol. 22 (Suppl. 5), 1998, pp. 95S–100S.

SLS2-3

- Brommage, T.G. et al.: Quantitation of Bone Growth Rate Variability in Rats Exposed to Micro- (Near Zero G) and Macrogravity (2G). Year 1 Annual Report, NASA CR- 202210, 1996, p. 9.

†=Publication of related ground-based study

- Durnova, G. et al.: Histomorphometric Study of Tibia of Rats Exposed aboard American Spacelab Life Sciences 2 Shuttle Mission. Journal of Gravitational Physiology, vol. 3(2), Sept 1996, pp. 80–81.
- Durnova, G.N. et al.: Investigation of Tibial Bones of the Rats Exposed onboard "Spacelab-2:" Histomorphometric Analysis (in Russian). Aviakosmicheskaia i Ekologicheskaia Meditsina, vol. 30(1), 1996, pp. 21–26.
- Evans, G.L. et al.: Spaceflight Has Compartment-Specific and Gene-Specific Effects on mRNA Levels for Bone Matrix Proteins in Rat Femur. Journal of Applied Physiology, vol. 84(6), Jun 1998, pp. 2132–2137.
- Fox, R.A. et al.: Effects of Spaceflight and Hindlimb Suspension on the Posture and Gait of Rats. In: Vestibular and Neural Front: Proceedings of the 12th International Symposium on Posture and Gait, K. Taguchi et al., eds. Matsumoto, October 3–7, 1994. Amsterdam: Elsevier Science Publishers, 1994, pp. 603–606.
- Wade, C.E. et al.: Body Mass Change during Altered Gravity: Spaceflight, Centrifugation, and Return to 1G. Journal of Gravitational Physiology, vol. 4(3), 1997, pp. 43–48.
- Wade, C.E. and E. Morey-Holton: Alteration of Renal Function of Rats following Spaceflight. Journal of Applied Physiology, vol. 275(4 Pt. 2), 1998, pp. R1058–1065.

SLS2-5

- Zerath, E. et al.: Effects of Spaceflight and Recovery on Rat Humeri and Vertebrae: Histological and Cell Culture Studies. Journal of Applied Physiology, vol. 81(1), 1996, pp. 164–171.

SLS2-6

- Fagette, S. et al.: Central and Peripheral Noradrenergic Responses to 14 Days of Spaceflight (SLS-2) or Hindlimb Suspension in Rats. Aviation, Space, and Environmental Medicine, vol. 67(5), 1996, pp. 458–462.

SLS2-9

- Alfrey, C.P. et al.: Regulation of Blood Volume during Spaceflight. SLS-2 Final Report (NAG2-500), Experiment 141, NASA CR-97-206684, Jan 1997, p. 45.

SLS2-10

- Allebban, Z. et al.: Effects of Spaceflight on Rat Erythroid Parameters. Journal of Applied Physiology, vol. 81(1), July 1996, pp. 117–122.
- Congdon, C.C. et al.: Lymphatic Tissue Changes in Rats Flown on Spacelab Life Sciences-2. Journal of Applied Physiology, vol. 81(1), July 1996, pp. 172–177.
- Ichiki, A.T. et al.: Apoptosis in Spaceflight. Proceedings of the Twentieth International Symposium on Space Technology and Science, vol. 2, 1996, pp. 1321–1323.

† = Publication of related ground-based study

- Ichiki, A.T. et al.: Effects of Spaceflight on Rat Peripheral Blood Leukocytes and Bone Marrow Progenitor Cells. Journal of Leukocyte Biology, vol. 60(1), July 1996, pp. 37–43.

SLS2-11

- Lesnyak, A. et al.: Effect of SLS-2 Spaceflight on Immunologic Parameters of Rats. Journal of Applied Physiology, vol. 81(1), Jul 1996, pp. 178–182.

SLS2-13

- Grigoriev, A.I. et al.: Biochemical and Morphological Stress-Reactions in Humans and Animals in Microgravity. Acta Astronautica, vol. 40(1), 1997, pp. 51–56.
- Kaplansky, A.S. et al.: Experimental Morphological Investigation of Stress-Inducing Effects of Microgravity in Rats Flown aboard SLS-2 (in Russian). Aerospace and Environmental Medicine, vol. 30(2), 1996, pp. 16–20.

SLS2-14

- Meslin, J.C. et al.: Effects of Galacto-Oligosaccharide and Bacterial Status on Mucin Distribution in Mucosa and on Large Intestine Fermentation in Rats. British Journal of Nutrition, vol. 69(3), 1993, pp. 903–912.†

SLS2-15

- Baldwin, K.M.: Effect of Spaceflight on the Functional, Biochemical and Metabolic Properties of Skeletal Muscle. Medicine and Science in Sports and Exercise, vol. 28(8), Aug 1996, pp. 983–987.
- Caiozzo, V.J. et al.: Microgravity-Induced Transformations of Myosin Isoforms and Contractile Properties of Skeletal Muscle. Journal of Applied Physiology, vol. 81(1), July 1996, pp. 123–132.
- Caiozzo, V.J. et al.: Functional and Cellular Adaptations of Rodent Skeletal Muscle to Weightlessness. Journal of Gravitational Physiology, vol. 2(1), 1995, pp. P39–P42.

SLS2-16

- Ilyina-Kakueva, E.I. et al.: Morphological Study of Skeletal Muscles in Rats Flown aboard SLS-2. Aerospace and Environmental Medicine, vol. 29(6), 1995, pp. 12–18.

SLS2-17

- Zamora, A.J. et al.: Respective Effects of Hindlimb Suspension, Confinement and Spaceflight on Myotendinous Junction Ultrastructure. Acta Astronautica, vol. 36(8–12), Oct–Dec 1995, pp. 693–706.

† = Publication of related ground-based study

- Roffino, S. et al.: Increase in Rat Soleus Myotendinous Interface after a 14-Day Spaceflight. Comptes Rendus de l'Academie des Sciences, Serie III, Sciences de la Vie, vol. 321(7), 1998, pp. 557–564.

SLS2-18

- Morel, J.L. et al.: Effect of a 14-Day Hindlimb Suspension on Cytosolic Ca^{2+} Concentration in Rat Portal Vein Myocytes. American Journal of Physiology, vol. 273 (6 Pt 2), Dec 1997, pp. H2867–H2875.†
- Sayet, I. et al.: Influence of Spaceflight, Hindlimb Suspension, and Venous Occlusion on Alpha 1-Adrenoceptors in Rat Vena Cava. Journal of Applied Physiology, vol. 78(5), May 1995, pp. 1882–1888.

SLS2-19

- Falempin, M. et al.: Functional Effects of Uridine Triphosphate on the Atrophied Soleus Muscle of Rat after Unloading. Muscle and Nerve, vol. 20(2), Feb 1997, pp. 172–178.†
- Furby, A. et al.: Effects of Chronic Electrostimulation on Rat Soleus Skinned Fibers during Hindlimb Suspension. Muscle and Nerve, vol. 16(7), Jul 1993, pp. 720–726.†
- Ishihara, A. et al.: Influence of Spaceflight on Succinate Dehydrogenase Activity and Soma Size of Rat Ventral Neurons. Acta Anatomica, vol. 157(4), 1996, pp. 303–308.
- Leterme, D. et al.: Influence of Chronic Stretching upon Rat Soleus Muscle during Non-Weight-Bearing Conditions. Pflügers Archives, vol. 429(2), Dec 1994, pp. 274–279.†
- Mounier, Y. et al.: Postnatal Muscle Development in Unloading Conditions. International Journal of Sports Medicine, vol. 18(Suppl. 4), Oct 1997, pp. S298–S299.†
- Stevens, L. et al.: Differential Adaptation to Weightlessness of Functional and Structural Characteristics of Rat Hindlimb Muscles. Journal of Gravitational Physiology, vol. 3(2), Sep 1996, pp. 54–57.

SLS2-20

- Allen, D.L. et al.: Myonuclear Number and Myosin Heavy Chain Expression in Rat Soleus Single Muscle Fibers after Spaceflight. Journal of Applied Physiology, vol. 81(1), July 1996, pp. 145–151.
- Ishihara, A. et al.: Effects of 14 Days of Spaceflight and Nine Days of Recovery on Cell Body Size and Succinate Dehydrogenase Activity of Rat Dorsal Root Ganglion Neurons. Neuroscience, vol. 81(1), Nov 1997, pp. 275–279.
- Ishihara, A. et al.: Influence of Spaceflight on Succinate Dehydrogenase Activity and Soma Size of Rat Ventral Horn Neurons. Acta Anatomica, vol. 157(4), 1996, pp. 303–308.

† = Publication of related ground-based study

- Kitajima, I. et al.: Vertebral Growth Disturbance in Rapidly Growing Rats during 14 Days of Spaceflight. Journal of Applied Physiology, vol. 81(1), July 1996, pp. 156–163.
- Ohira, Y. et al.: Responses of β-Adrenoceptor in Rat Soleus to Phosphorous Compound Levels and/or Unloading. American Journal of Physiology, vol. 266(5:1), May 1994, pp. C1257–C1262.†
- Ohira, Y. et al.: Role of Gravitational Loading on the Development of Soleus Muscle in Rats. International Journal of Sports Medicine, vol. 18 (Suppl. 4), 1997, pp. S295–S296.
- Ohira, Y. et al.: Spaceflight Effects on β-Adrenoceptor and Metabolic Properties in Rat Plantaris. Journal of Applied Physiology, vol. 81(1), July 1996, pp. 152–155.
- Ohnishi, T. et al.: Cellular Content of p53 Protein in Rat Skin after Exposure to the Space Environment. Journal of Applied Physiology, vol. 81(1), July 1996, pp. 183–185.
- Tabata, I. et al.: Effects of Space Flight on GLUT-4 Content in Rat Plantaris Muscle. International Journal of Biometeorolgy, vol. 41(3), Feb 1998, pp. 101–104.
- Yamashita, H. et al.: Responses cf Brown-Adipose-Tissue Activity in the Rat to 14 Days of Spaceflight. Pathophysiology, vol. 3, 1996, pp. 53–56.
- Yamashita, H. et al.: Responses of Brown Adipose Tissue Activity to Unloading in Rats. Journal of Applied Physiology, vol. 78(2), Feb 1995, pp. 384–387.†

SLS2-21

- Macias, M.Y. et al.: Myelinated Sensory and Alpha Motor Axon Regeneration in Peripheral Nerve Neuromas. Muscle Nerve, vol. 21(12), 1998, pp. 1748–1758.†
- Riley, D.A.: Review of Primary Spaceflight-Induced and Secondary Reloading-Induced Changes in Slow Antigravity Muscles of Rats. Advances in Space Research, vol. 21(8/9), 1998, pp. 1073–1075.
- Riley, D.A.: Inflight and Postflight Changes in Skeletal Muscles of Rats flown in NASA Spacelabs and Cosmos Biosatellites. COSPAR Abstracts, 1996.
- Riley, D.A. et al.: Inflight and Postflight Changes in Skeletal Muscles of SLS-1 and SLS-2 Spaceflown Rats. Journal of Applied Physiology, vol. 81(1), 1996, pp. 133–144.
- Riley, D.A. et al.: SLS-2 Inflight and Postflight Changes in Skeletal Muscles of 14 Day Spaceflown Rats. American Society for Gravitational and Space Biology Bulletin, vol. 8(1), 1994, p. 85.
- Riley, D.A. et al.: Review of Spaceflight and Hindlimb Suspension Unloading Induced Sarcomeric Damage and Repair. Basic Applied Myology, vol. 5(2), 1995, pp. 139–141.

† = Publication of related ground-based study

SLS2-22

- Takekura, H. et al.: Morphological Changes in the Triads and Sarcoplasmic Reticulum of Rat Slow and Fast Muscle Fibres following Denervation and Immobilization. Journal of Muscle Research and Cell Motility, vol. 17(4), Aug 1996, pp. 391–400.†
- Yoshioka, T. et al.: Calcium Movement of Sarcoplasmic Reticulum from Hindlimb Suspended Muscle. Acta Astronautica, vol. 38(3), Feb 1996, pp. 209–212.†
- Yoshioka, T. et al.: Effects of Spaceflight on Enzyme Activities and Ultrastructure of Fast-Type Skeletal Muscles of Rats. Japanese Journal of Physiology, vol. 47(5), 1997, pp. 471–476.

SLS2-24

- Clavel, B. et al.: Changes Induced in the Choroidal Distribution of Enzymes and Apical Membrane-Associated Proteins after a 14-Day Spaceflight (SLS-2 mission) (abstract). American Society for Gravitational and Space Biology Bulletin, vol. 9(1), Oct 1995, p. 85.
- Davet, J. et al.: Choroidal Readaptation to Gravity in Rats after Spaceflight and Head-Down Tilt. Journal of Applied Physiology, vol. 84(1), 1998, pp. 19–29.
- Fareh, J. et al.: Cardiac and Plasma Atrial Natriuretic Peptide (ANP) after a 9-Day Hindlimb-Suspension in Rats: Changes in Biosynthesis and Storage. Journal of Applied Physiology, vol. 76(2), 1994, pp. 641–649.†
- Gabrion J. et al.: Choroidal Adaptation to Real Microgravity (Mission SLS-2) or Simulated (Rat Hindlimb-Suspended Model): Effects on the Cellular Structures and on the Natriuretic Peptide Receptors (in French). In: Four Years of Scientific Research in Space, CNES / COSPAR, J. Seylaz, ed., 1994, pp. 319–322.
- Gabrion, J. et al.: Choroidal Responses in Microgravity. (SLS-1, SLS-2 and Hindlimb-Suspension Experiments). Acta Astronautica, vol. 36, 1995, pp. 439–448.
- Gabrion, J. et al.: Changes in Apical Organization of Choroidal Cells in Rats Adapted to Spaceflight or Head-Down Tilt. Brain Research, vol. 734(1–2), 1996, pp. 301–315.
- Masseguin, C. et al.: Aquaporin 1 Is Down-Regulated in Rat Choroid Plexus after Altered Gravity Exposure As Well As after Water Deprivation and Salt-Loading (abstract). American Society for Gravitational and Space Biology Bulletin, vol. 11(1), 1997, p. 32.

SLS2-25

- Fidelina, O.V. et al.: Reactions of the Hypothalamic Paraventricular Nucleus and Vagus Nerve Dorsalis Nucleus in the Rats Exposed to Changed Gravitational Environment (in Russian). Problemy Endokrinologii, vol. 41(6), 1995, pp. 35–38.

† = Publication of related ground-based study

- Krasnov, I.B. et al.: Repeated Hypergravity Influence: Morphology of Locus Coeruleus, Hypothalamic Paraventricular Nucleus and Vagus Nerve Dorsalis Nucleus of Rat Brain. Aviakosmicheskaya i Ekologiceskaya Meditsina, vol. 33(5), 1999.
- Sergutina, A.V. et al.: Some Cytochemical Features of the Motor System of the Rat Brain after Spaceflight. Biulleten Eksperimentalnoi Biologii i Meditsiny, vol. 119(3), Mar 1995, pp. 288–290.

SLS2-26

- Umnova, M.M. et al.: Reaction of Rat Neuromuscular Junctions during Changes in Gravity (an Electron Microscopic Study) (in Russian). Doklady Akademii Nauk, vol. 352(2), Jan 1997, pp. 268–272.

SLS2-27

- Ross, M.D. and D.L. Tomko: Effect of Gravity on Vestibular Neural Development. Brain Research Review, vol. 28(1–2), 1998, pp. 44–51.

† = Publication of related ground-based study

Appendix III

Hardware Descriptions

Page intentionally left blank

Hardware

This Appendix profiles flight hardware used in life science experiments flown by Ames Research Center and Kennedy Space Center between 1991 and 1995.

Hardware items are listed alphabetically.

The Appendix includes profiles of key flight hardware items built or funded by NASA with:

- major subsystems for each hardware item indicated by an underline and described in more detail in separate entries
- minor subsystems briefly described for each hardware item but not appearing as separate entries.

Flight hardware information was obtained from the open literature, NASA internal reports, and NASA hardware design review summaries.

Each hardware entry contains a description of the flight hardware item and appropriate subsystems; if applicable, a description of any version modification made to the hardware item within the 1991-1995 period; a listing of general specifications (when available); types of data acquisition (if applicable); a brief description of related ground-based hardware; references to documents, publications, and flight missions from which the information was derived; and a full-page labeled illustration. The illustrations in this appendix are not necessarily scale drawings, but they are intended to assist the reader in understanding the general design and operation of the hardware.

For further information regarding recent flight hardware, please contact the Payload and Facilities Engineering Branch of the Life Sciences Division, Ames Research Center, Moffett Field, CA 94035-1000 or the Flight Experiment Project Management Office, Kennedy Space Center, FL 32899.

Preceding Page Blank

Ambient Temperature Recorder (ATR-4)

Hardware Description

The Ambient Temperature Recorder (ATR-4) is a self-contained, battery-powered instrument, approximately the size of a deck of cards. It may be placed in almost any environment (not submersible in liquid) to provide recording of up to four channels of temperature data. Channel 1 is selectable for either internal or external probe temperature sensing. Channels 2–4 are external only and require individual external temperature probes. External probes are flexible to allow the user to place probes at various locations within the sensed environment. Standard length for probes is 3 feet, but they may be longer or shorter, if required.

Data sample rate and number of channels are user-selectable. The total number of samples (32400) is limited by the size of the solid-state memory in the ATR-4. When the memory is full, the recorder stops recording. Stored data may be accessed postflight using a serial interface unit and an IBM-compatible computer. Power for the ATR-4 is provided by two internal batteries. An O-ring seal protects the internal electronics of the ATR-4 from fluids in the environment and permits operation in damp or humid environments, such as an animal habitat.

Specifications

Dimensions: 23 x 41 x 86 mm
Weight: ~135 g
Power: Lithium thionyl chloride batteries, 1 year life
Temp: Range: -40 to +60 °C
Accuracy: ±1 °C
Probes: Integrated circuit sensor, standard length, 3 feet

Data Acquisition

Sampling: every 1.87, 3.75, 7.5, or 15 minutes selectable; internal/external measurement (selectable on 1 channel only); 1 channel: 42 days @1.87-min sampling; 342 days @15 min; 4 channels: 10 days @1.87-min sampling; 85 days @15 min

Related Ground-Based Hardware

IBM-compatible computer and serial interface unit: The computer and interface unit are used for readout of ATR-4 data.

Hardware Publications

- *Life Sciences Laboratory Equipment (LSLE) On-line Catalog*. NASA, 1998. http://lifesci.arc.nasa.gov:100/lsle/.

Missions Flown 1991-1995

SLS-1/STS-40, PARE.01/STS-48, PARE.02/STS-54, PARE.03/STS-56, IML-1/STS-42, IML-2/STS-65, PHCF/STS-46, SL-J/STS-47, PSE.02/STS-52, PSE.03/STS-57, PSE.04/STS-62, IMMUNE.1/STS-60, IMMUNE.2/STS-63, NIH.R1/STS-66, NIH.R2/STS-70

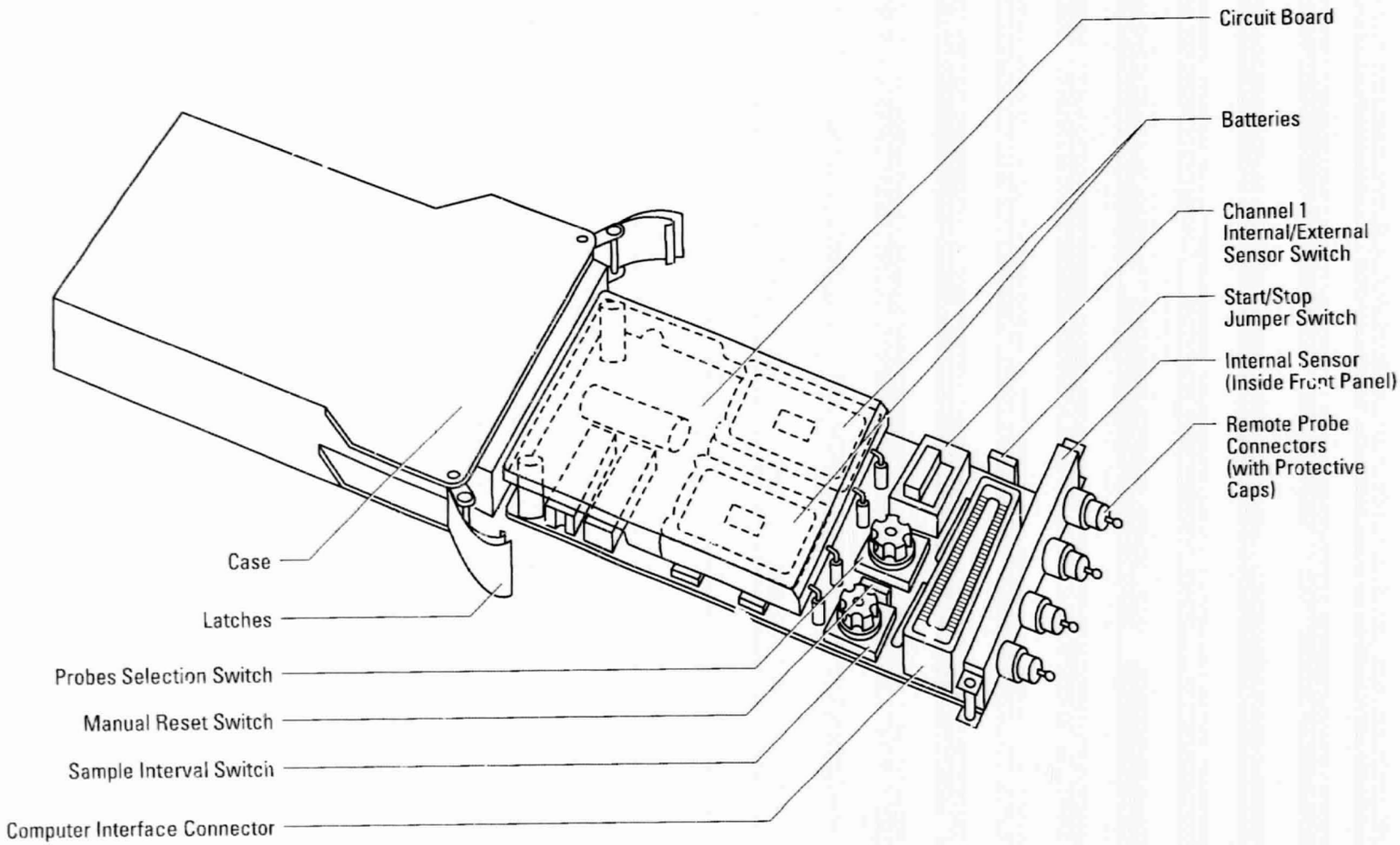
Circuit Board
Batteries
Channel 1
Internal/External
Sensor Switch
Start/Stop
Jumper Switch
Internal Sensor
(Inside Front Panel)
Remote Probe
Connectors
(with Protective
Caps)
Case
Latches
Probes Selection Switch
Manual Reset Switch
Sample Interval Switch
Computer Interface Connector

Hardware Description

The Animal Enclosure Module (AEM) is a rodent housing facility that supports up to six 250-g rats. The unit fits inside a standard Shuttle middeck locker with a modified locker door. A removable divider plate can provide two separate animal holding areas. The AEM remains in the stowage locker during launch and landing. On orbit, the AEM may be removed partway from the locker and the interior viewed or photographed through a Lexan cover on the top of the unit. With addition of an Ambient Temperature Recorder, temperatures at up to four locations within the unit can be recorded automatically.

Subsystems

Air Quality: Cabin air is exchanged with the AEM through a filter system. Four fans create a slight negative pressure inside the AEM, ensuring an inward flow of air and particulate entrapment by the treated outlet filter. Cabinet air is drawn through front panel inlet slots, then along the side plenum walls to the rear of the AEM, then through the inlet filter, across the cage/animal habitat area, through the exhaust filter, and exits the front of the AEM. High efficiency air (inlet and outlet) filters (electrostatic and phosphoric acid-treated fiberglass pads) prevent the escape of particulate matter into the cabin atmosphere. Treated charcoal inside the filters helps contain animal odor and neutralize urine within the AEM. The filter system is rated for 20 days of odor control.

Lighting: Four internal incandescent lamps (two used as backup) provide illumination and are controlled by an automatic timer to provide a standard 12:12 light/dark cycle. The timer is programmable for other light/dark cycles and a backup battery maintains the timer if AEM power is disrupted. Only two lamps are used during the light cycle to keep cage compartment heating to a minimum. The lamps are covered with clear caps to protect them from animal debris and breakage.

Food: Rodent food bars are attached to four slide-in food bar plates inside the rodent cage. The food, a sterilized laboratory formula (standard or PI formulated), is molded into rectangular bars accessible to the animals at all times during the mission.

Water Refill Box: The AEM accommodates an internal water supply containing four lixit drinking valves and two flexible plastic bladders for water storage. Remaining water can be observed through the Lexan window on top of the water box.

Water Refill Line: The AEM Water Refill Line (WRL) is used for inflight refill of the drinking water in the AEM. It allows direct transfer of potable water from the auxiliary port of the Shuttle Orbiter Galley without the need for a special pumping device.

Specifications

Dimensions: 17(W) x 20(D) x 9.62(H) inches
Weight: 55–60 lbs (including rodents, food, and water)
Power: 28 W (2 lights only)
Temperature: Elevated 3 to 6 °C above on-orbit ambient temperature

Data Acquisition

None, except when used with an Ambient Temperature Recorder

Related Ground-Based Hardware

None

Hardware Publications

- Dalton, B.P., G. Jahns, J. Meylor, N. Hawes, T.N. Fast, and G. Zarow: *Spacelab Life Sciences-1 Final Report*. NASA TM-4706, 1995.
- *Life Sciences Laboratory Equipment (LSLE) On-line Catalog*. NASA, 1998. http://lifesci.arc.nasa.gov:100/lsle/.

Missions Flown 1991-1995

SLS-1/STS-40, PARE.01/STS-48, PARE.02/STS-54, PARE.03/STS-56, PSE.02/STS-52, PSE.03/STS-57, PSE.04/STS-62, IMMUNE.1/STS-60, IMMUNE.2/STS-63, NIH.R1/STS-66, NIH.R2/STS-70

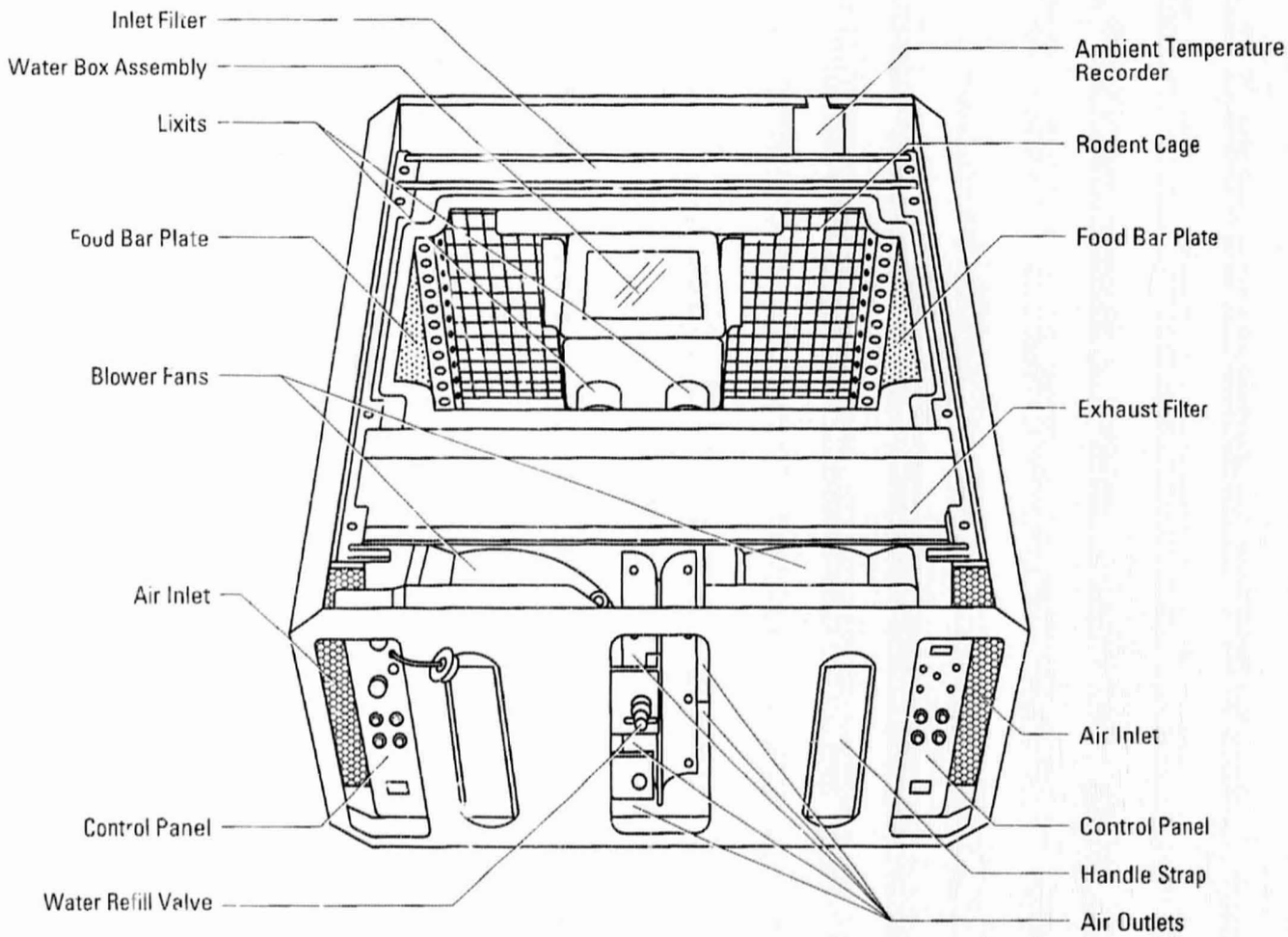
Inlet Filter
Water Box Assembly
Lixits
Food Bar Plate
Blower Fans
Air Inlet
Control Panel
Water Refill Valve
Ambient Temperature Recorder
Rodent Cage
Food Bar Plate
Exhaust Filter
Air Inlet
Control Panel
Handle Strap
Air Outlets

Animal Enclosure Module (AEM) Water Refill Box

Hardware Description

The Animal Enclosure Module (AEM) Water Refill Box, storable in one-half of a middeck locker, is supplementary hardware that can be used to replenish drinking water in the AEM for missions longer than 5 days. However, if the water supply has been refilled on orbit, the water usage rate becomes difficult to compute, since the amount of water added cannot be accurately measured. The Refill Box is powered through the AEM via a connector cable.

Specifications

Dimensions: 16.5 x 10 x 6 inches
Weight 10 lbs
Power: 28 W
Capacity: 2300 cc
Interfaces: AEM water fill port, fill power connector

Data Acquisition

None

Related Ground-Based Hardware

None

Hardware Publications

- Dalton, B.P., G. Jahns, J. Meylor, N. Hawes, T.N. Fast, and G. Zarow: *Spacelab Life Sciences-1 Final Report.* NASA TM-4706, 1995.

Missions Flown 1991-1995

SLS-1/STS-40, PARE.01/STS-48, PARE.02/STS-54, PARE.03/STS-56, PSE.02/STS-52, PSE.03/STS-57, PSE.04/STS-62, IMMUNE.1/STS-60, IMMUNE.2/STS-63, NIH.R1/STS-66, NIH.R2/STS-70

Animal Enclosure Module (AEM) Water Refill Box

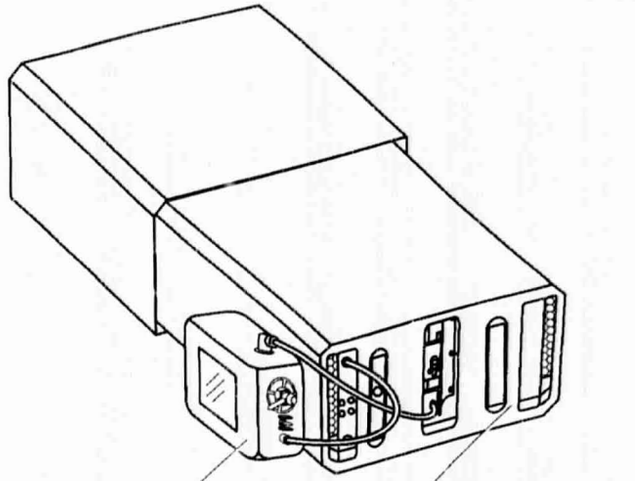

Water Refill Box In Use

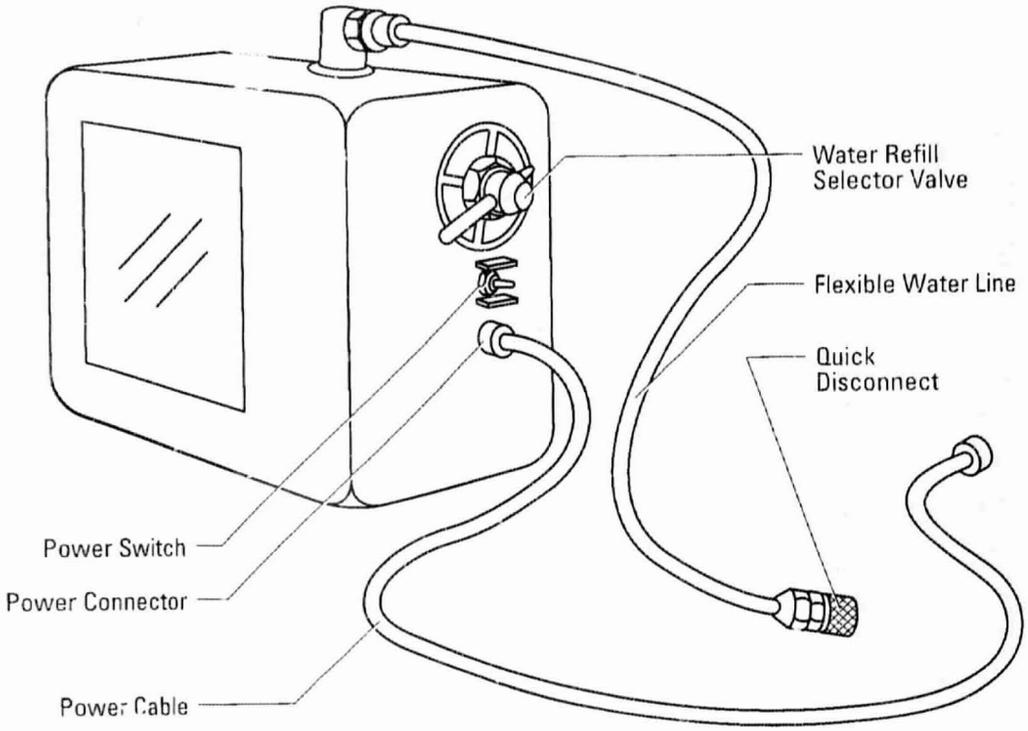

Water Refill Box Assembly

Hardware Description

The Autogenic Feedback System-2 (AFS-2) is a light-weight, battery-operated, fully ambulatory physiological monitoring system that allows complete freedom of motion for users. It is designed to allow astronauts to monitor their own physiological data so they can consciously alter their physiological responses to help counteract the effects of space motion sickness. It can continuously monitor, display, and record nine channels of physiological data for up to 12 hours on a single set of alkaline batteries. The AFS-2 offers both a Treatment Mode and a Control Mode. In Treatment Mode, physiological data can be viewed on the Wrist Display Unit, while in Control Mode only system status and malfunction indications are displayed. Data are stored on a standard audiocassette using special instrumentation tape.

Subsystems

Sensors: The AFS-2 sensors include a ring transducer to monitor skin temperature and blood volume pulse, a respiration transducer, electrodes for electrocardiography (ECG) and skin conductance, and a triaxial accelerometer for head movement. The Belt Electronics package conditions these signals prior to recording.

Garment Assembly: The Garment Assembly consists of a Garment, a Cable Harness, and a Wrist Display Unit. The Garment is a cotton jumpsuit with Velcro attachment points to secure the Cable Harness and serves as a support structure for the various system sensors and transducers. The Wrist Display Unit displays physiological data, indicates system malfunctions, and notifies the user of a low battery condition.

Belt Assembly: The Belt Assembly consists of a Belt Electronics Package, a Battery Pack, and a TEAC Data Recorder. The Battery Pack provides power for the entire system. The TEAC Data Recorder records analog signals from the Belt Assembly. Data and power for the Data Recorder are provided by the Belt Electronics via the TEAC Interface Cable.

Specifications

Dimensions: N/A
Weight: 2 kg
Power: 4 batteries, 9 V each
Sensors: blood volume pulse (1–200±0.5) skin temperature (70–99.9±1°F), skin conductance level (0.5–50 μMHOs ±2%), respiration (40–60 breaths/min), electrocardiography (40–180 beats/min) and acceleration (±0.25 G±5%)

Data Acquisition

Skin temperature, electrocardiography, respiration, skin conductance level, blood volume pulse/photoplethysmography, xyz-axis acceleration

Related Ground-Based Hardware

TEAC MR-40 Playback Unit: The unit replays AFS-2 tapes. It reproduces original analog data by demodulating the recorded FM signals.
Data Analysis System: The system digitizes and processes MR-40 analog data.

Hardware Publications

- Cowings, P.S. and W.B. Toscano: *Autogenic-Feedback Training (AFT) As a Preventative Method for Space Motion Sickness: Background and Experimental Design.* NASA TM-108780, 1993, pp. ill.
- Fukushima, A., D. Bergner, and M.T. Eodice: *Autogenic Feedback System-2 (AFS-2) User Manual.* NASA UM-21350, 1995.
- *Life Sciences Laboratory Equipment (LSLE) On-line Catalog.* NASA, 1998. http://lifesci.arc.nasa.gov:100/lsle/.

Missions Flown 1991-1995

SL-J/STS-47

Autogenic Feedback System-2

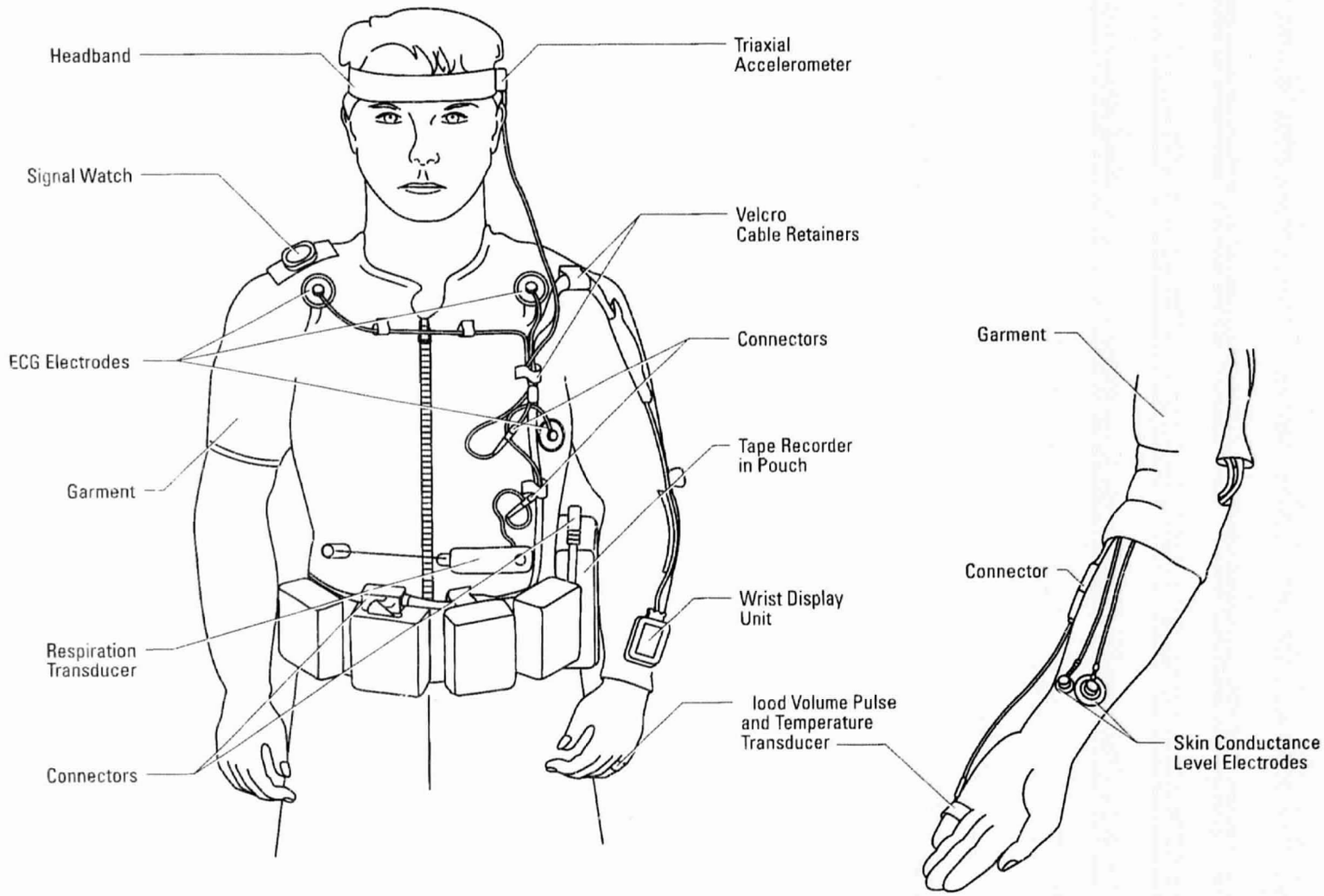

Hardware Description

The BRIC-100 canister is an anodized aluminum cylinder with threaded lids on each end. The canister provides containment and structural support for experiment-specific hardware and specimens. The canister lids allow passive gas exchange of O_2 and CO_2 through a semipermeable membrane. Two septa are located in the lid to allow gas sampling. If gas exchange is not required, the semipermeable membrane and capture ring can be replaced by an aluminum capture plate to provide a closed experimental environment. The hardware inside the canister consists of nine polycarbonate 100-mm petri plates. The petri plates are held into place by a petri dish cage insert. The cage provides both vibration isolation from the other dishes and the canister and airspace between each petri dish. The BRIC-100 canisters are flown in sets of three, and a standard middeck locker can accommodate up to six BRIC-100 canisters.

Specifications

Dimensions: 114.3 mm x 381 mm
Weight: 4.5 lbs
Power: None

Data Acquisition

None

Related Ground-Based Hardware

None

Hardware Publications

None

Missions Flown 1991-1995

BRIC-02/STS-64, BRIC-04/STS-70, BRIC-05/STS-70

Biological Research in Canisters (BRIC-100)

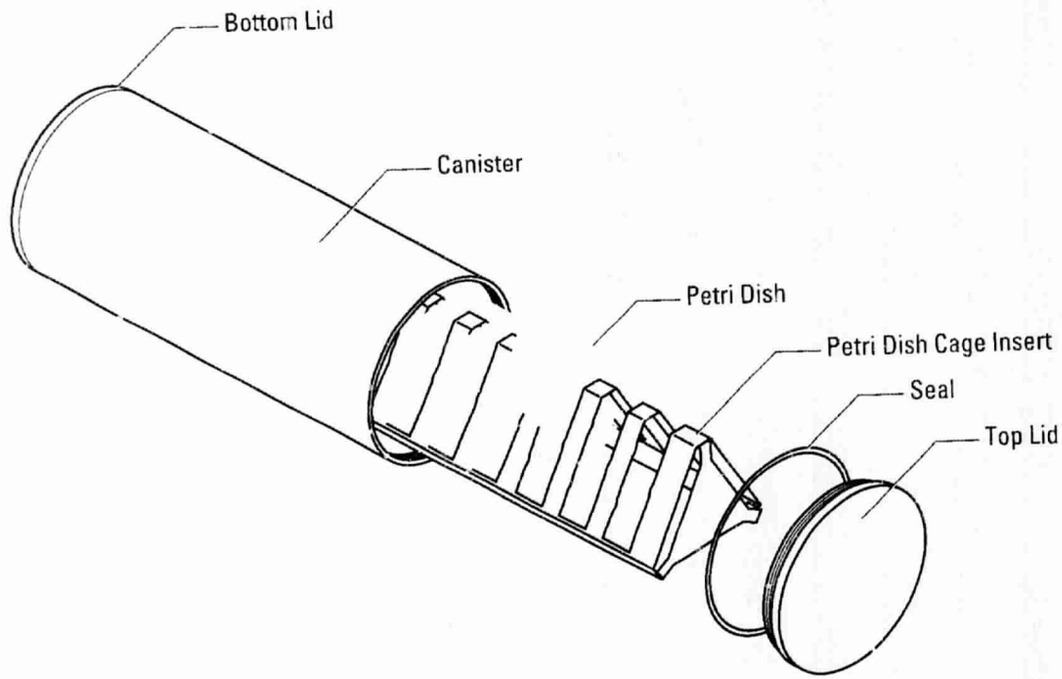

Biological Research in Canisters (BRIC-60)

Hardware Description

The BRIC-60 canister is an anodized aluminum cylinder with an upper and lower chamber. Four pressure relief holes in each chamber accommodate the rapid depressurization requirements of the Space Shuttle while maintaining a light-tight environment inside the canister chambers. This canister will fit inside the Life Sciences Laboratory Equipment (LSLE) gaseous nitrogen (GN_2) freezer. Up to five canisters can be flown at ambient middeck conditions in a standard middeck locker.

Twelve 60-mm petri dishes (total of 24 per canister) or 13 Teflon tubes (total of 26 per canister), for growing seedlings, can be placed inside each canister chamber. Lithium hydroxide (CO_2 absorbent) has also been flown inside these canisters for specimens that produce carbon dioxide (CO_2).

Specifications

Dimensions: 82 mm diam. x 32 mm
Weight: 1.9 lbs
Power: N/A

Data Acquisition

None

Related Ground-Based Hardware

None

Hardware Publications

None

Missions Flown 1991-1995

BRIC-01/STS-68, BRIC-03/STS-63, BRIC-06/STS-69

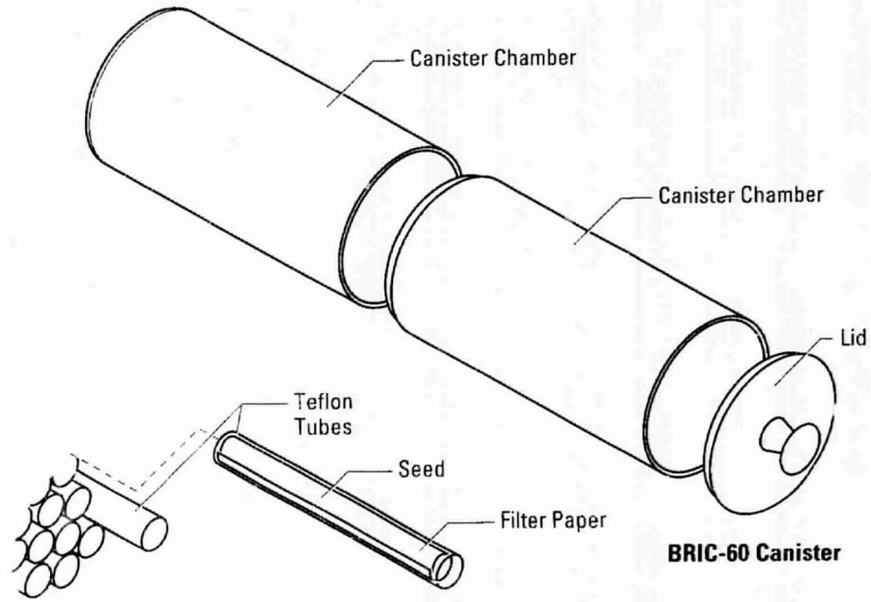

BRIC-60 Canister

Teflon Tube Configuration

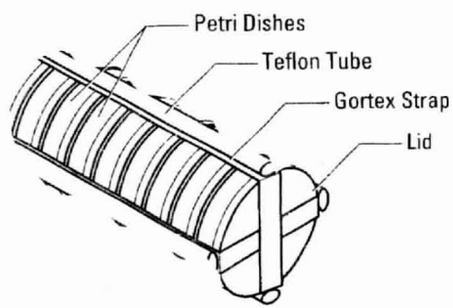

Petri Dish Configuration

Hardware Description

Biorack is a reusable, multiuser facility, developed by the European Space Agency (ESA), designed for studying the effects of microgravity and radiation on cellular functions and developmental processes in plants, tissues, cells, bacteria, and small invertebrates. The facility is equipped with a cooler/freezer, two incubators, and a glovebox. Experiment hardware must fit in one of two types of sealed, anodized aluminum containers. Type I containers are 90 x 58 x 24 mm and Type II containers are 79 x79 x 99 mm.

The US1 hardware is designed to study the effects of high-energy ionized particle (HZE) radiation in a biological dosimeter. Organisms can be flown in the configurations described below. US1 hardware made use of both Type I and Type II containers.

Subsystems

Lexan Tubes: Lexan polycarbonate tubes are assembled in four-tube and eight-tube configurations in Type I containers. These tubes maintain the nematodes in liquid buffered saline. The containers also feature CR-39 film to document the tracks made by the radiation, kimfoil sheets to keep the film oxygenated, and Thermoluminescent Detector assemblies to measure radiation received.

Radiation Cartridge Belt: The belt made of Nomex fabric consists of pockets lined with Pyrell foam. Velcro tabs secure the experiment packages. The belt is attached to the Spacelab tunnel to absorb radiation and contains five Type I containers with specimens and one ambient temperature recorder.

Nematode Stack Assembly: Twenty-eight layered assemblies are contained within each Type II container. These assemblies consist of a base support, worm/agarose layers on millipore filter paper, CR-39 film to track the path of radiation, kimfoil sheets, and Teflon sheets to act as a non-stick surface to prevent dislodging the worm/agarose layer postflight when removing the CR-39 film.

Specifications

Dimensions: 6 Type I containers (90 x 58 x 24 mm each); 2 Type II containers (79 x 79 x 99 mm each)
Weight: Unknown
Power N/A

Data Acquisition

None

Related Ground-Based Hardware

None

Hardware Publications

- Nelson, G.A., W.W. Schubert, G.A. Kazarians, G.F. Richards, E.V. Benton, E.F. Benton, and R.P. Henke: Genetic and Molecular Dosimetry of HZE Radiation. In: *Biorack on Spacelab IML-1*, ESA SP-1162. Noordwijk, the Netherlands: ESA Publications Division, March 1995, pp. 41–50.
- *Life Sciences Laboratory Equipment (LSLE) On-line Catalog*. NASA, 1998. http://lifesci.arc.nasa.gov:10C/lsle/.

Missions Flown 1991-1995

IML-1/STS-42

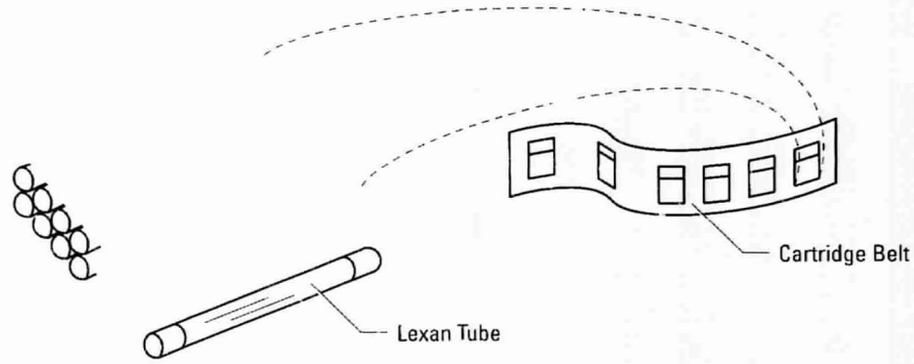

Type I Container Hardware and Belt

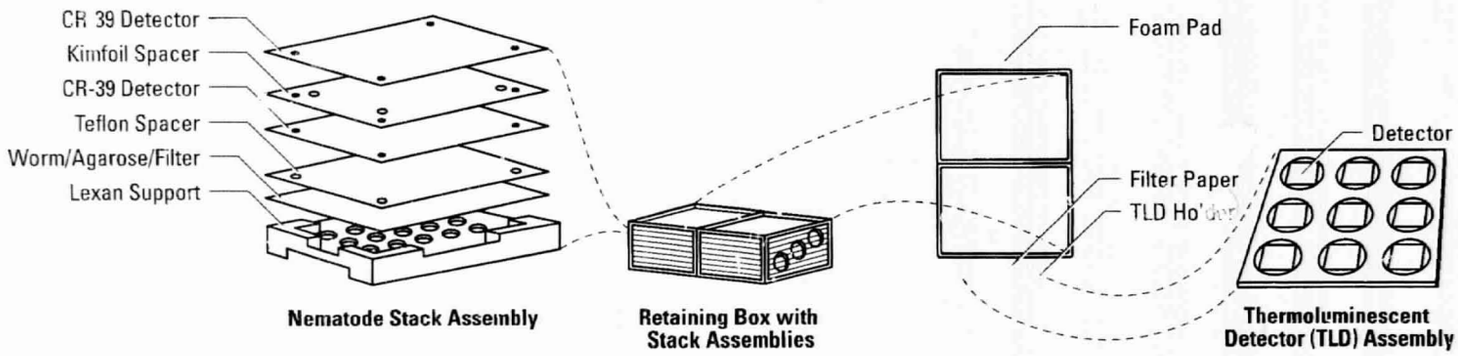

Type II Container Hardware

Hardware Description

Biorack is a reusable, multiuser facility, developed by the European Space Agency (ESA), designed for studying the effects of microgravity and radiation on cellular functions and developmental processes in plants, tissues, cells, bacteria, and small invertebrates. The facility is equipped with a cooler/freezer, two incubators, and a glovebox. Experiment hardware must fit in one of two types of sealed, anodized aluminum containers. Type I containers are 90 x 58 x 24 mm. Type II containers are 79 x 79 x 99 mm.

The US2 hardware is designed to study the effects of microgravity and radiation on cellular and genetic structures. US2 hardware used only Type I containers.

Subsystems

Cell Chambers: Each double chamber has two culture wells consisting of a Lexan chamber fitted with a movable piston and a molecular layer of silicone to ease piston travel. The yeast plate has two grooved areas into which Lexan rings fit. Prior to fixation, the piston is pushed down to vent the air inside the chamber. Fixative is injected through the piston with a hypodermic syringe.

Culture Assemblies: Four of the double chambers (total of eight culture wells) are placed into a tray and inserted into Type I containers. The tray holding the chambers is fitted with a pad to ensure that the chambers are held adequately in place. These containers are opened only inside the Biorack glovebox.

Specifications

Dimensions: 12 Type I containers (90 x 58 x 24 mm each)
Weight: 924.8 g each
Power: N/A

Data Acquisition

None

Related Ground-Based Hardware

None

Hardware Publications

- Bruschi, C.V. and M.S. Esposito: Cell Division, Mitotic Recombination and Onset of Meiosis by Diploid Yeast Cells during Space Flight. In: *Biorack on Spacelab IML-1*, ESA SP-1162. Noordwijk, the Netherlands: ESA Publications Division, March 1995, pp. 83–93.
- *Life Sciences Laboratory Equipment (LSLE) On-line Catalog*. NASA, 1998. http://lifesci.arc.nasa.gov-100/lsle/.

Missions Flown 1991-1995

IML-1/STS-42

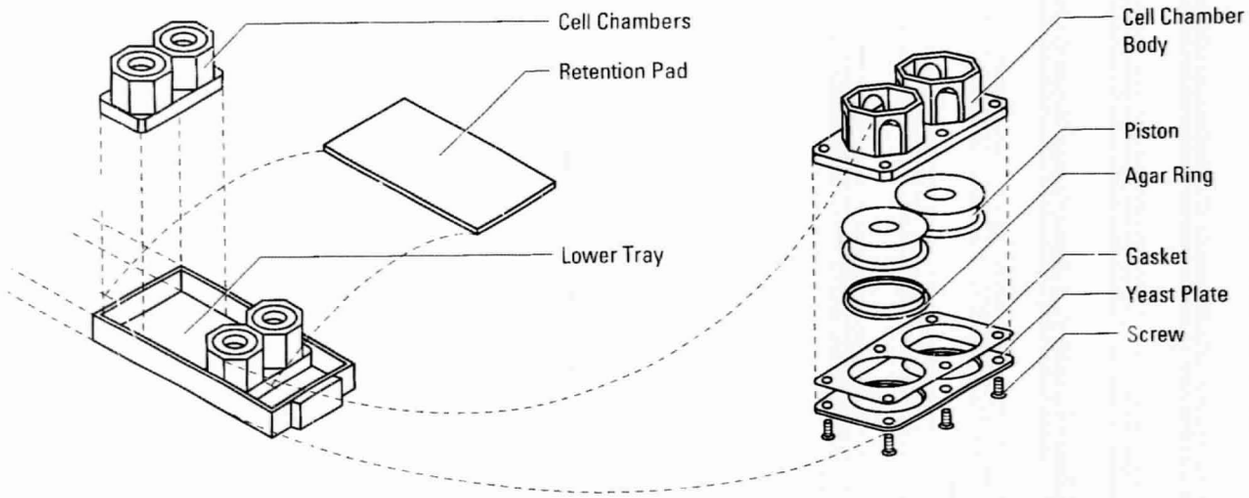

Type I Container Hardware

Cell Chamber Assembly

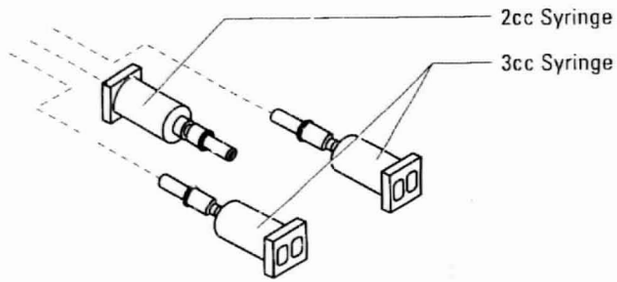

Fixative Syringes

Hardware Description

Biorack is a reusable, multiuser facility, developed by the European Space Agency (ESA), designed for studying the effects of microgravity and radiation on cellular functions and developmental processes in plants, tissues, cells, bacteria, and small invertebrates. The facility is equipped with a cooler/freezer, two incubators, and a glovebox. Experiment hardware must fit in one of two types of sealed, anodized aluminum containers. Type I containers are 90 x 58 x 24 mm and Type II containers are 79 x 79 x 99 mm.

The US3 hardware is designed to study the effects of microgravity on cell cultures. US3 hardware used only Type I containers.

Subsystems

Cell Chambers: The chamber is a Lexan polycarbonate with two wells. In each well is a bubble of a gas exchanging material that expands or collapses as medium is added or removed. A silicon rubber gasket and bottom plate hold cells cultured on coverslips. A deflector ring in the bottom of the chamber prevents fluid forces from dislodging or shearing the cells.

Chamber Assemblies: Four culture chambers (eight wells) are inverted and placed onto a tray inserted in a Type I container. The chamber units are held in place by double-sided tape. Medium exchange and fixation are performed by inserting a hypodermic needle through the gasket and onto the cultures

Specifications

Dimensions: 20 Type I containers (90 x 58 x 24 mm each)
Weight: Unknown
Power: N/A

Data Acquisition

None

Related Ground-Based Hardware

None

Hardware Publications

- Duke, F.J., D. Montufar-Solis, and E. Daane: Chondrogenesis in Cultures of Embryonic Mouse Limb Mesenchyme Exposed to Microgravity. In: *Biorack on Spacelab IML-1*, ESA SP-1162. Noordwijk, the Netherlands: ESA Publications Division, March 1995, pp. 115–127.
- *Life Sciences Laboratory Equipment (LSLE) On-line Catalog*. NASA, 1998. http://lifesci.arc.nasa.gov:100/lsle/.

Missions Flown 1991-1995

IML-1/STS-42

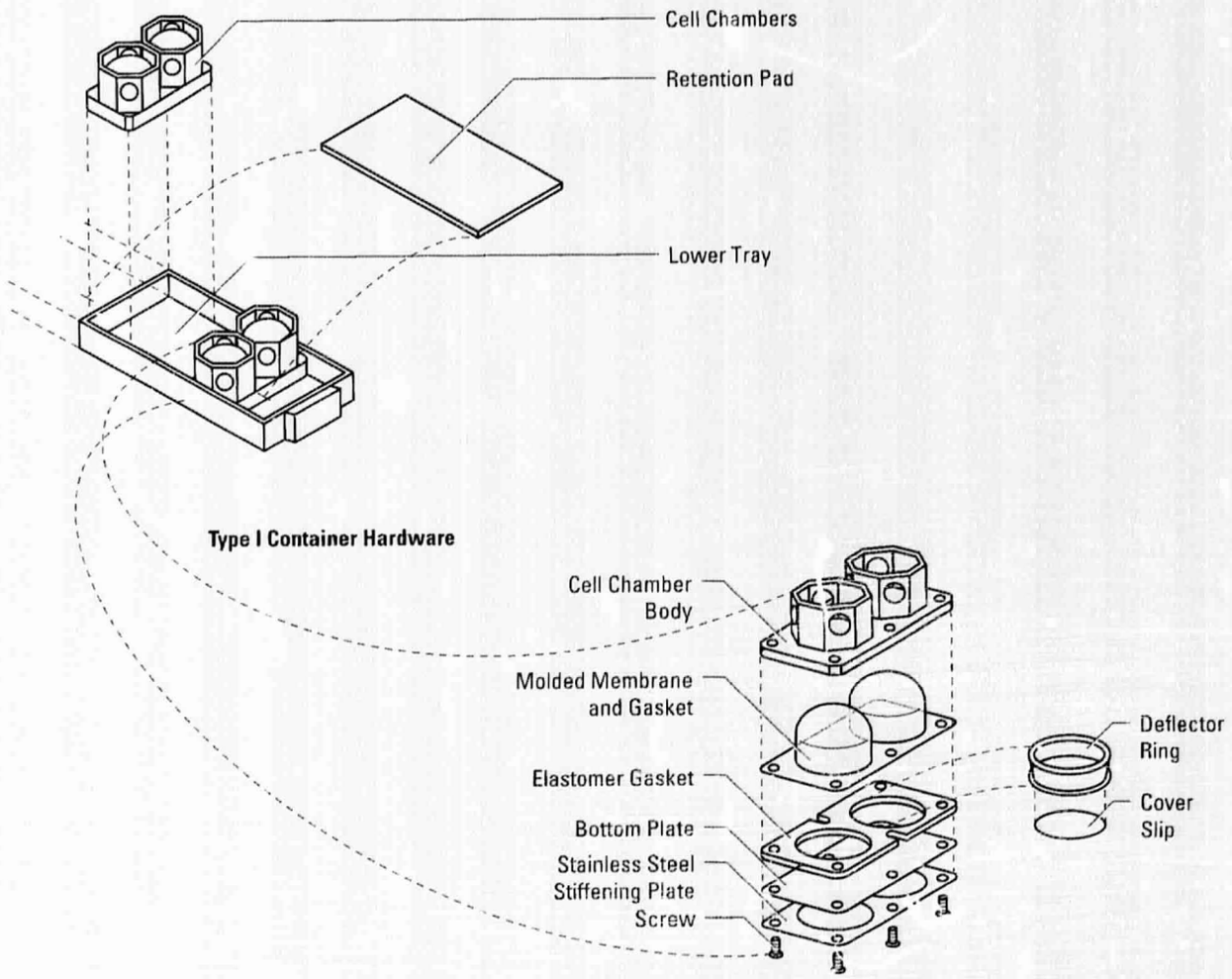

Type I Container Hardware

Cell Chamber Assembly

Hardware Description

The Syringe Racks are storage devices for use with the Biorack US3 experiment hardware. The racks are designed to hold the syringes that are used to perform medium exchange and fixation on the cell cultures. The racks, made of Lexan polycarbonate, are designed in three different configurations. Each fits in a different location: the Middeck Locker Stowage Insert, the cooler, and the freezer. The Cooler Rack is designed to hold 40 syringes filled with replacement medium. The Stowage Rack is designed to hold the replacement medium syringes that are transferred from the Cooler Rack following Biorack activation. The Freezer Rack is designed to store the syringes containing removed conditioned medium.

Specifications

Dimensions: Unknown
Weight: Unknown
Power: N/A

Data Acquisition

None

Related Ground-Based Hardware

None

Hardware Publications

- Duke, P.J., D. Montufar-Solis, and E. Daane: Chondrogenesis in Cultures of Embryonic Mouse Limb Mesenchyme Exposed to Microgravity. In: *Biorack on Spacelab IML-1*, ESA SP-1162. Noordwijk, the Netherlands:ESA Publications Division, March 1995, pp. 115–127.

Missions Flown 1991-1995

IML-1/STS-42

Biorack US3 Syringe Racks

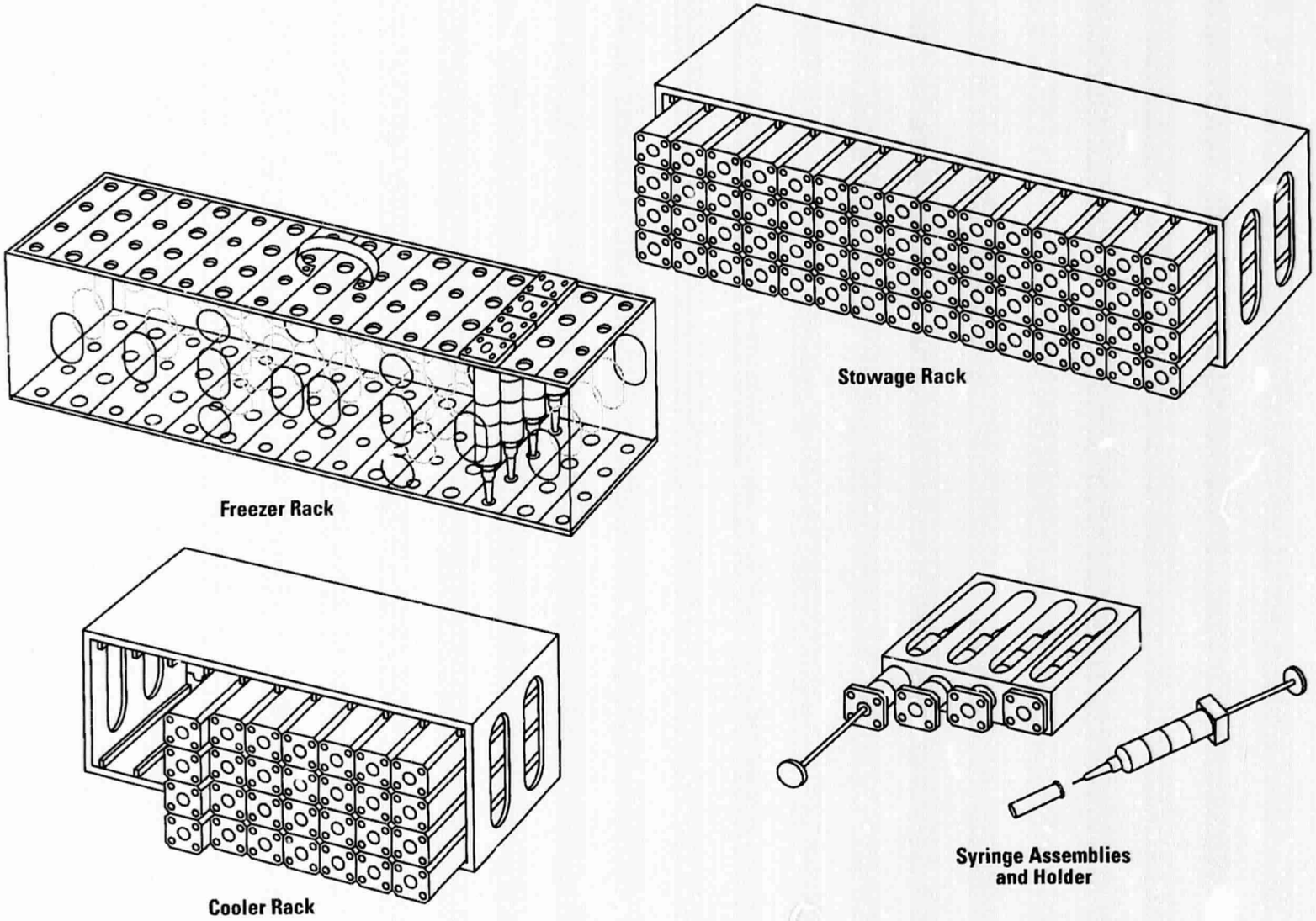

Hardware Description

The Cosmos 2229 flight hardware suite is a highly integrated combination of NASA and Russian systems. The hardware supports neuromuscular, neurovestibular, and circadian rhythm/temperature (CR/T) experiments by U.S. and Russian investigators. Substantial ground-based hardware was developed for pre-and postflight testing, calibration, and data collection.

Subsystems

Head Electronics Assembly (HEA): The HEA provides interface points for head-mounted physiologic sensors and preconditioning for data signals. These signals include eye position, vestibular nuclei response (VNR), electroencephalogram (EEG), electrooculogram (EOG), brain temperature, as well as the following Russian signals: pO_2, electrostimulation, rheophlethysmography, and intracranial pressure (ICP). The assembly also serves as a platform for mounting head motion velocity sensors.

The NASA-developed components of the HEA are three circuit boards: the mother, daughter, and baby boards. These boards are stacked on the Russian-supplied base mounting ring, which is fixed to the primate's skull. The entire assembly is enclosed by the Russian-supplied cranial cap.

Circadian Rhythm/Temperature (CR/T) Hardware: The CR/T hardware consists of a sensor array, a combined signal processor and data recorder unit, and an interconnect box. The sensors measure the following parameters: motor activity, ambient temperature, brain temperature, and three channels of skin temperature. The signal processor records the above parameters, as well as Russian-supplied heart rate and deep body temperature signals. The interconnect box provides an interface between the sensors and the signal processor. The CR/T hardware is battery-powered.

Neuromuscular Hardware: The neuromuscular hardware consists of a tendon force sensor, six electromyogram (EMG) electrodes, and associated signal conditioning circuitry. A Tendon Force Compensation Module provides temperature compensation and voltage scaling.

Neurovestibular Hardware: Two angular rate sensors, one each for yaw and pitch, are mounted on the cranial cap to measure head motion velocity.

Power Supply: The power supply, located within the Russian preamplifier box, derives its power from the Russian spacecraft power source of 27 VDC. It provides power to all NASA systems other than the CR/T hardware.

Specifications

Dimensions: N/A
Weight: N/A
Power: N/A

Data Acquisition

N/A

Related Ground-Based Hardware

Head Electronics Signal Simulator (HESS): The HESS is used for testing of the Head Electronics Assembly.

Hardware Publications

- Connolly, J.P., M.G. Skidmore, and D.A. Helwig. *Final Reports of the U.S. Experiments Flown on the Russian Biosatellite Cosmos 2229.* NASA TM-110439, 1997, pp. 35–46.

Missions Flown 1991-1995

Bion 10/Cosmos 2229

Cosmos 2229 Hardware Suite Overview

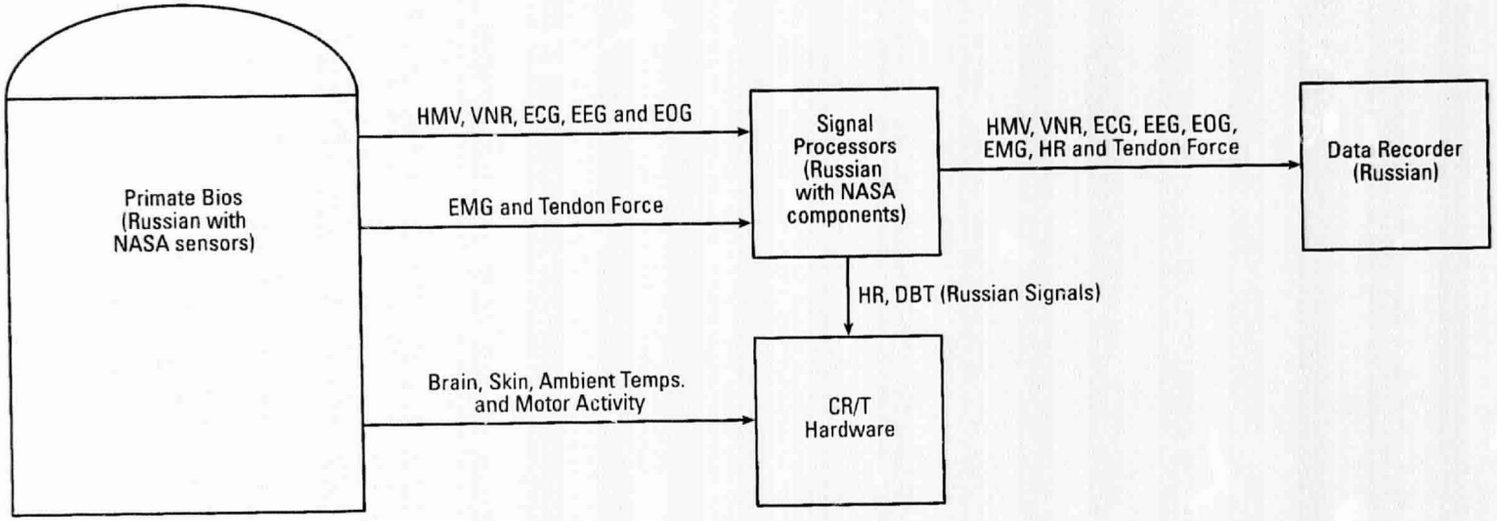

[Shaded areas indicate predominantly Russian hardware items.]

Cosmos 2229 Circadian Rhythm/ Temperature Hardware

Hardware Description

The Circadian Rhythm/Temperature (CR/T) hardware is an enhanced version of the system flown on the Cosmos 2044 mission. NASA-provided equipment includes sensors and signal conditioning equipment to measure skin temperature, brain temperature, ambient temperature, and motor activity.

Subsystems

Sensors: Motor activity is monitored by a piezoelectric sensor attached to the monkey's restraint jacket. Three thermistors attached directly to the monkey's ankle, thigh, and temple measure skin temperature. The thigh and ankle sensors are glued to the skin and then taped in place to provide additional support. Brain temperature is recorded by means of an electrode implanted superior to the caudate nucleus of the brain. The sensor contains a microbead thermistor encased in 25-gauge stainless steel tubing with leads to the Head Electronics Assembly. Ambient temperature in the Biocosmos capsule is monitored by a thermistor located at the bottom of the primate chair. Heart rate is derived from the Russian electrocardiogram (ECG) implant signal by a Russian R-wave detector. The output signal connects to the Circadian Rhythm/Temperature Signal Processor (CR/T-SP). Body temperature is measured by a Russian-supplied telemetric sensor implanted subcutaneously in the axilla, which provides data as a frequency output of the sensor, proportional to body temperature.

Signal Processing: All parameters are recorded by the CR/T Signal Processor (CR/T-SP), which functions as a self-contained signal-processing and digital data storage device. It conditions incoming signals for processing and stores data for later recovery by a ground-based computer. Data collection and storage is controlled using a commercial VITARTS/VITACORD software package. An interconnect point between the sensors and the CR/T-SP is provided by the CR/T Interface Box (CR/T-IB).

Power Supply: Power for the CR/T system is supplied by 16 batteries (9 volt) and a precision 5-volt regulator.

Specifications

Dimensions: N/A
Weight: N/A
Power: 16 batteries, 9 volts each; 5-volt regulator

Data Acquisition

Motor activity; brain, skin, ambient, and axillary temperatures; heart rate

Related Ground-Based Hardware

Ground Readout Unit (GRU): The GRU tests the operation of the CR/T-SP. It is also used to begin data sampling and to recover data stored in the CR/T-SP. The GRU consists of an IBM compatible computer, a CR/T Interface Board, and a printer. Like the CR/T-SP, the GRU runs the VITARTS/VITACORD software.

Hardware Publications

- Connolly, J.P., M.G. Skidmore, and D.A. Helwig: *Final Reports of the U.S. Experiments Flown on the Russian Biosatellite Cosmos 2229.* NASA TM-110439, 1997, pp. 36–37, 42.

Missions Flown 1991-1995

Bion 10/Cosmos 2229

Cosmos 2229 Circadian Rhythm/ Temperature Hardware

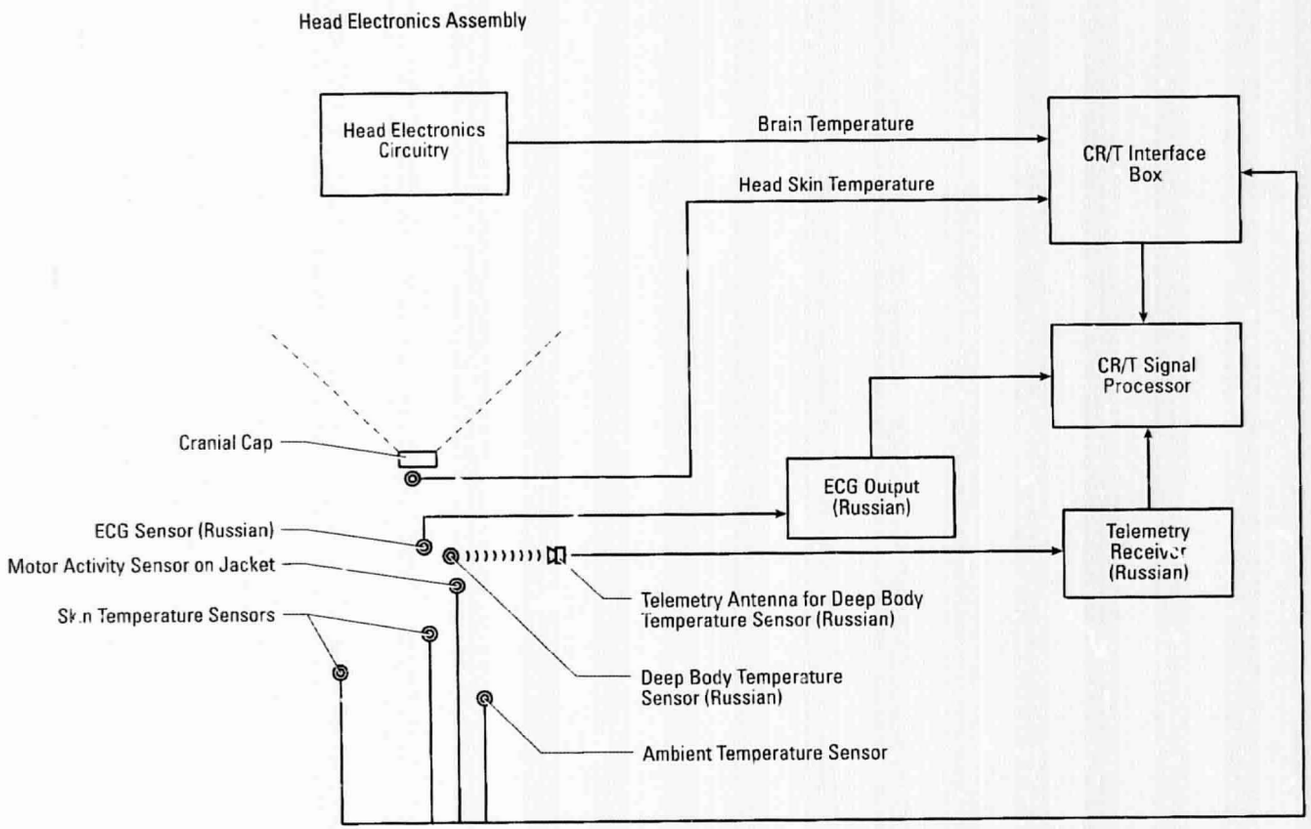

[Shaded areas indicate predominantly Russian hardware items.]

Hardware Description

The equipment for the neuromuscular experiments aboard Cosmos 2229 includes implants and preamplifiers for electromyogram (EMG) signals and implants, transducers, and preamplifiers for tendon force measurements. EMG and tendon force data are logged by the Russian Data Recorder.

Subsystems

EMG Electrodes: The EMG implants are bipolar intramuscular electrodes made of very fine multistranded, teflon-coated, stainless steel wires. For the Cosmos 2229 mission, six electrodes were implanted in four sites.

EMG/ECG Boards: Located in the Russian Preamplifier Box, the circuit boards provide preamplification of the EMG electrode signals, which are used to analyze foot pedal, locomotor, and postural motor control.

Tendon Force Sensor Assembly: The Tendon Force Buckle, an active strain gauge half-bridge, is surgically implanted in the subject for measurement of tendon force. The Tendon Force Compensation Module, providing temperature compensation and voltage scaling, makes up the other half of the bridge. The sensor and the module are connected by an integral cable. Tendon activity is achieved through subject use of the Russian Foot Pedal hardware.

Tendon Force Signal Conditioner Board: Located in the Russian Amplifier and Test Control Box, the circuit board provides excitation to the Tendon Force Sensor as well as offset, gain, and filtering of the signal derived from the sensor.

Specifications

Dimensions: N/A
Weight: N/A
Power: 27 VDC
Maximum Strain: 40 lbs (tendon force)

Data Acquisition

Electromyogram data, tendon force data

Related Ground-Based Hardware

Ground Test Unit-2 (GTU-2): The GTU-2 is used to test the tendon force and EMG/ECG boards.
Lab Test Unit (LTU): The LTU is used for ground-based animal studies requiring EMG/ECG and tendon force measurements. The LTU has hardware identical to the flight suite, contains EMG/ECG and tendon force boards, and provides preamplification of the EMG/ECG and tendon force signals.

Hardware Publications

- Gregor, R.J. and T.A. Abelew: Tendon Force Measurements and Movement Control: a Review. *Medicine and Science in Sports and Exercise*, vol. 26(11), November 1994, pp. 1359–1372.
- Connolly, J.P., M.G. Skidmore, and D.A. Helwig: *Final Reports of the U.S. Experiments Flown on the Russian Biosatellite Cosmos 2229.* NASA TM-110439, 1997, pp. 38, 42.

Missions Flown 1991-1995

Bion 10/Cosmos 2229

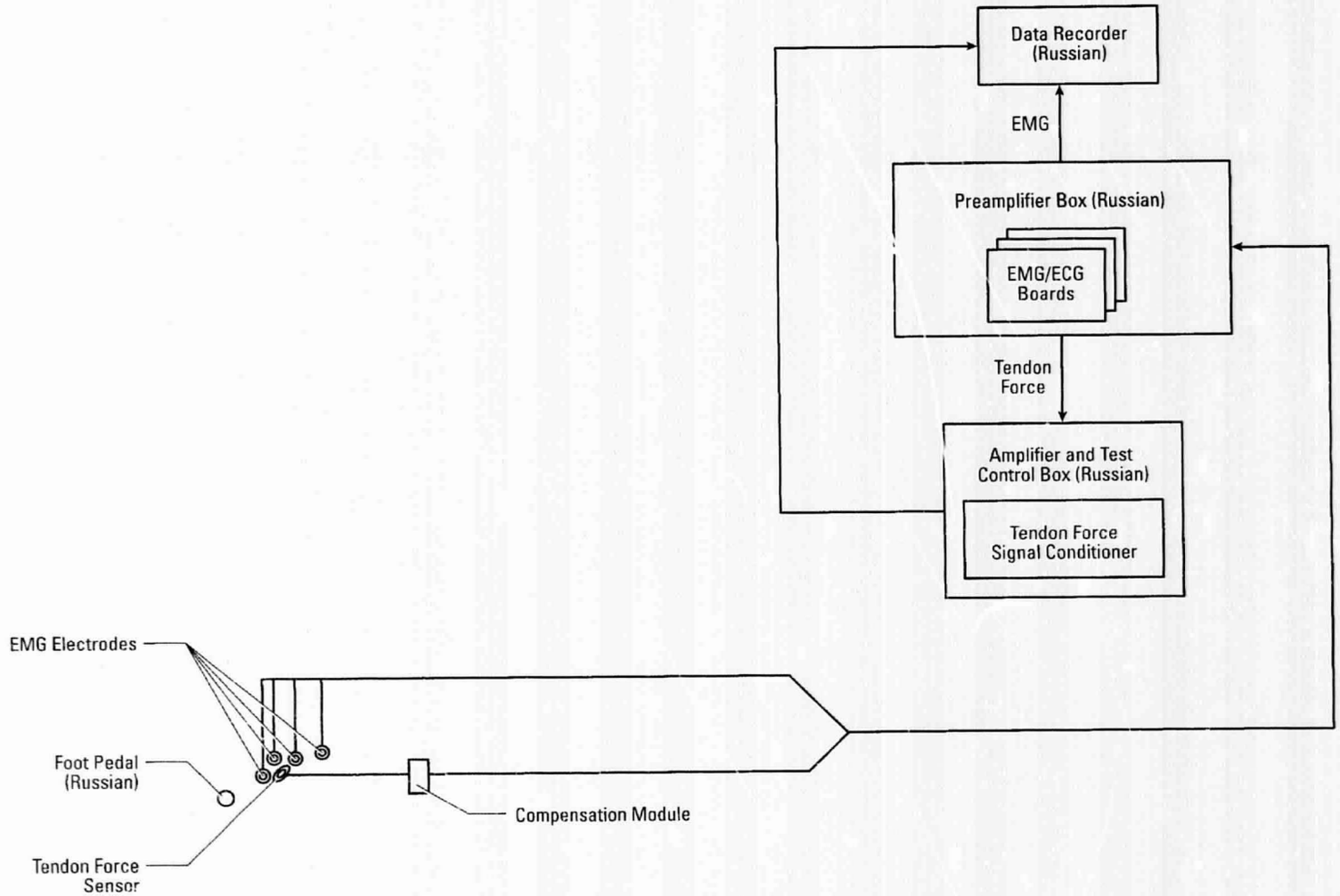

[Shaded areas indicate predominantly Russian hardware items.]

Cosmos 2229 Neurovestibular Hardware

Hardware Description

The Cosmos 2229 neurovestibular hardware measures vestibular nuclei response (VNR) and direction and velocity of primate head movement, driven by rotational and oscillating devices and the associated neurovestibular response due to microgravity exposure.

Subsystems

Angular Rate Sensors: These sensors, one each for pitch and yaw, measure head motion velocity (HMV) and are mounted on the outside of the Cranial Cap.

HMV Signal Conditioner: The conditioner receives input from the HMV sensors and provides output voltage levels proportional to the pitch and yaw angular rates. The pitch and yaw outputs are then routed to the Russian Final Amplifier Box.

Amplifiers and Preamplifiers: Supplied in the form of hybrid integrated circuits, the amplifiers and preamplifiers include a multiplexing VNR amplifier, which preconditions a total of seven signals; two logic signals, which control a multiplexer in selecting among four serially switched inputs (for recording on a Russian recorder channel); and an EEG/EOG hybrid, which conditions electroencephalogram (EEG) and electrooculogram (EOG) signals.

Specifications

Dimensions: N/A
Weight: N/A
Power: 27 VDC

Data Acquisition

Head motion velocity (pitch and yaw), vestibular nuclei response

Related Ground-Based Hardware

Four-axis Vestibular and Optokinetic Rotators: The rotators are used pre- and postflight to present neurovestibular stimuli.
Multi-axis Rotator: The rotator is used for pre- and postflight studies of primate eye position, VNR, and vestibular primary afferent response.
Portable Linear Sled (PLS): The PLS is used pre- and postflight for measurements during horizontal oscillations of specified frequency and sinusoidal acceleration.
Ground Test Unit-1 (GTU-1): The GTU-1 is used pre- and postflight for equipment testing and data recording.

Hardware Publications

- Connolly, J.P., M.G. Skidmore, and D.A. Helwig: *Final Reports of the U.S. Experiments Flown on the Russian Biosatellite Cosmos 2229.* NASA TM-110439, 1997, pp. 37, 40–41.

Missions Flown 1991-1995

Bion 10/Cosmos 2229

Cosmos 2229 Neurovestibular Hardware

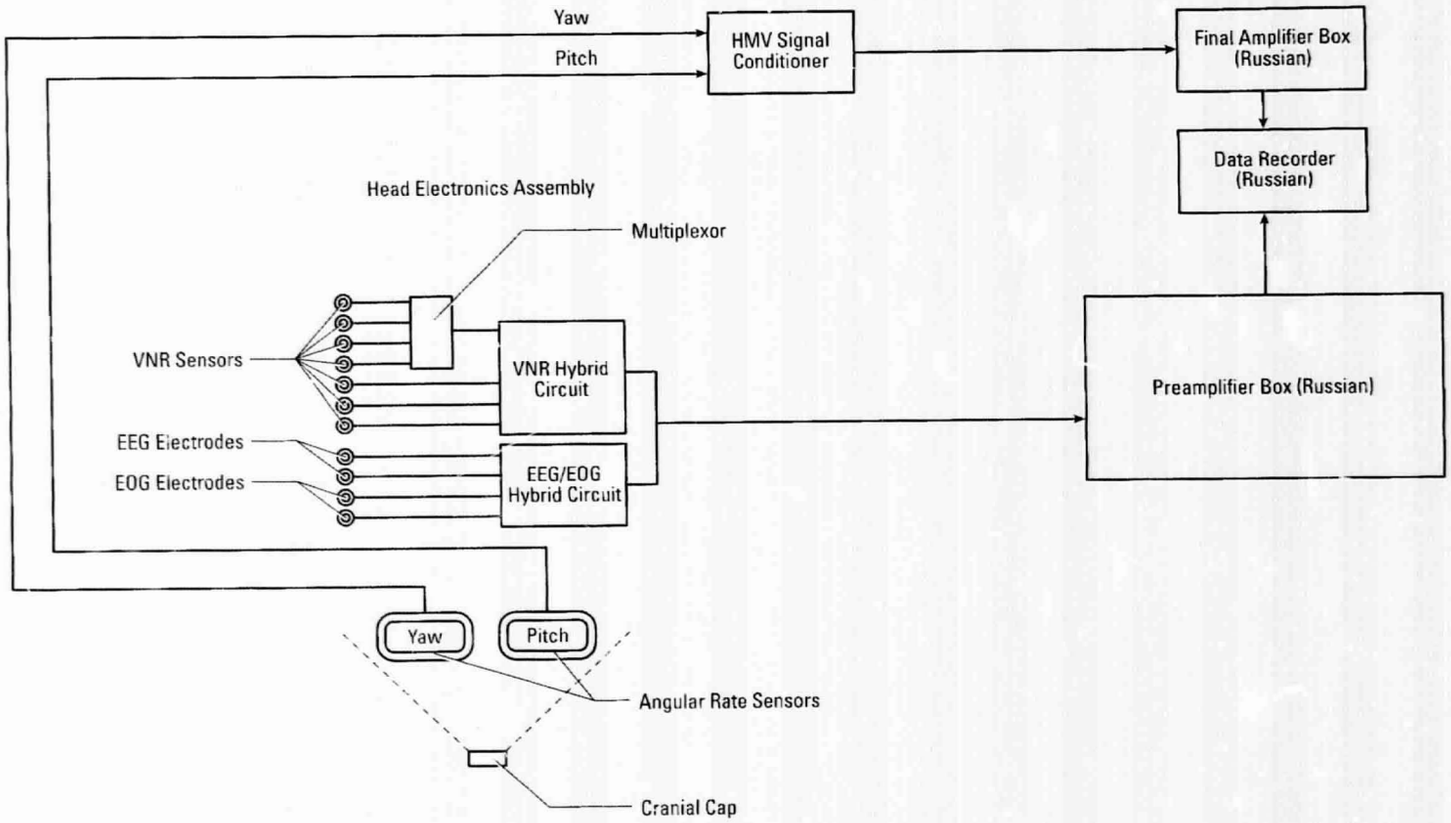

[Shaded areas indicate predominantly Russian hardware items.]

Hardware Description

The Dissecting Microscope supports general life sciences experiments requiring capabilities such as examination, dissection, and image recording of tissues and other specimens. The microscope is modular and stowed when not in use. During operations, it is deployed in the General Purpose Work Station and secured using Velcro.

Subsystems

Zeiss Stereomicroscope, Model SV 8: The microscope features a continuously variable zoom of 8–64 X magnification. It includes an adapter to accommodate a video camera.

Video Camera: The video camera records images during inflight experiment operations, which can be downlinked in real time.

Video Interface Unit (VIU): The VIU supplies power to the video camera and converts the Spacelab-provided video synchronization signal from balanced to single-ended format for use by the camera. Additionally, the VIU simultaneously converts the video output of the camera to a balanced, differential output for recorders and downlink.

Dissecting Microscope Lighting System: The lighting system provides the incident lighting required for viewing through a bifurcated fiberoptic bundle. A cooling system, prime and backup 160 W halogen lamps, and protective inlet and outlet screens are included.

Specifications

Dimensions: Approx 48.26 (H) x 20.32 (W) x 25.40 (D) cm
Weight: 10 kg (all parts as above) (22 lbs)
Power: 28 VDC power, approx 15 W total

Data Acquisition

Video

Related Ground-Based Hardware

None

Hardware Publications

- *Life Sciences Laboratory Equipment (LSLE) On-line Catalog.* NASA, 1998. http://lifesci.arc.nasa.gov:100/lsle/.

Missions Flown 1991-1995

SL-J/STS-47

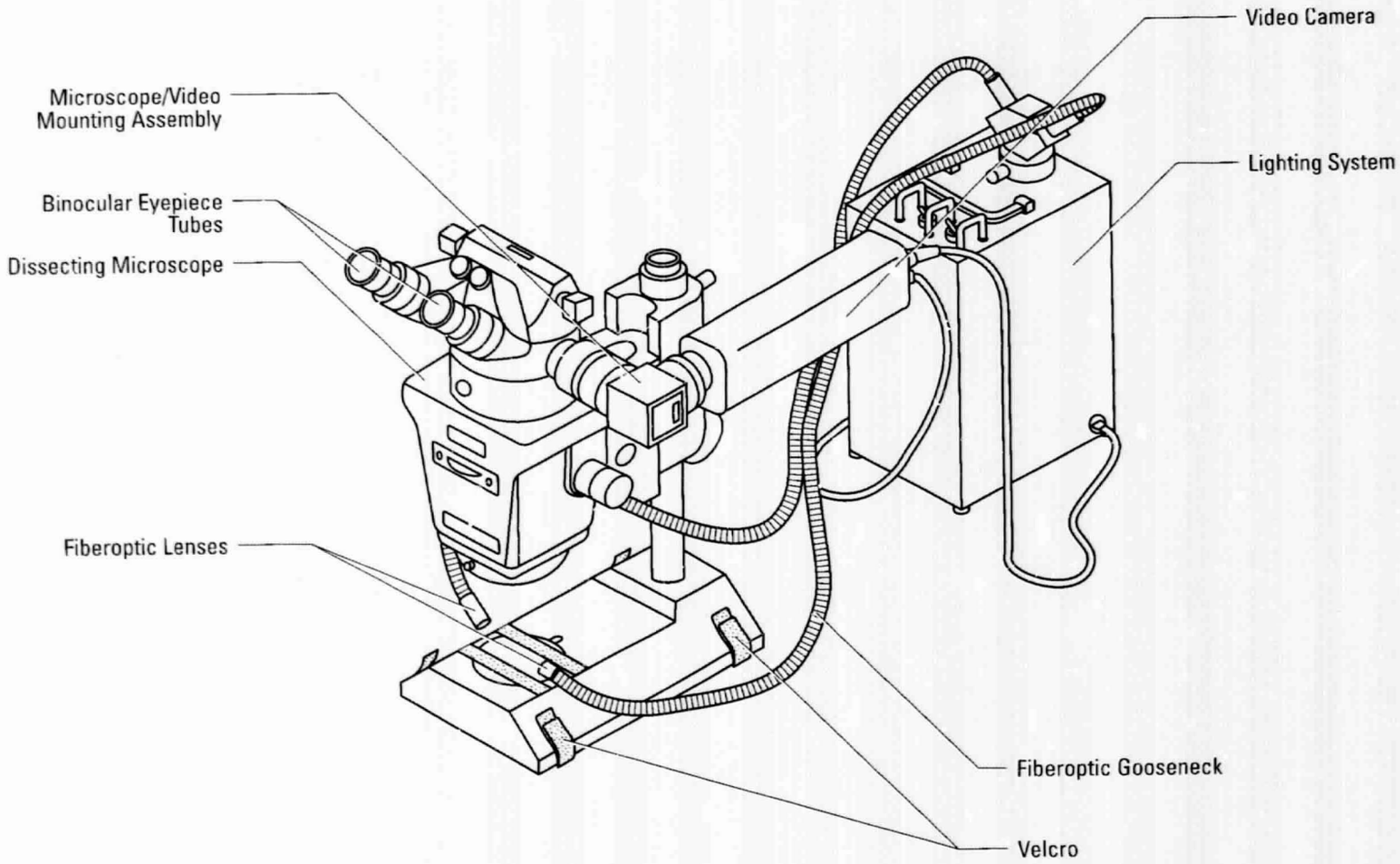
Video Camera
Microscope/Video Mounting Assembly
Lighting System
Binocular Eyepiece Tubes
Dissecting Microscope
Fiberoptic Lenses
Fiberoptic Gooseneck
Velcro

Hardware Description

The Frog Environmental Unit (FEU) provides a ventilated and temperature-controlled habitat for four female frogs as well as groups of developing embryos. A centrifuge inside the FEU provides an artificial Earth 1-G environment and can accommodate up to 28 Egg Chamber Units (ECUs). A separate compartment inside the FEU provides exposure to microgravity conditions for an additional 28 ECUs. Together, these systems offer the capability for simultaneous side-by-side experiments consisting of both a 0-G "treatment" group and a 1-G "control" group.

Subsystems

Adult Frog Box/ Frog Box Chamber: The box can house four adult female frogs and is divided into two compartments, with each compartment accommodating two frogs. The frog compartments are lined with a soft, absorbent material to prevent skin abrasion. Frogs are kept moist with Ringer's solution, a solution of chlorides of sodium, potassium, and calcium that is isotonic to animal tissue. The frog box slides into the FEU and mates with an air supply via quick disconnects. An aquarium-style air pump provides ventilation.

Egg Chamber Units (ECU): Egg chamber units consist of three Lexan pieces assembled to form an incubation chamber for the growing embryos. The eggs are placed on a stainless steel grid inside an egg basket and fitted onto the eyepiece unit. The eyepiece features a viewport for examining embryos using a microscope and video equipment. The chambers may be filled with Ringer's solution and can accommodate injections of fixatives or other materials.

Power and Control Systems: The Power Conditioning Unit (PCU) accepts power from the Spacelab and distributes it to the various FEU subsystems. The PCU controls and indicators provide for set-up, monitoring, and operation of the FEU.

Centrifuge: The centrifuge provides an artificial gravity force of 1 G for onboard egg chambers. It has a double row of slots, color-coded to match the egg chambers.

Kits: The Human Chorionic Gonadotrophin (HCG)/Sperm Kit contains separate syringes filled with HCG and Ringer's solution and Sperm Packages for holding sperm suspension and whole frog testes. The Egg Chamber Operations Kit holds forceps and petri dishes for egg handling. Ringer's Kits contain separate syringes for Ringer's solution and a mixture of Ringer's and Ficoll. Fixation Kits contain separate syringes for two types of fixative: a dilute acetic acid/dichromate buffer and formaldehyde. The Fixed Egg Chamber Kits contain boxes for holding egg chambers after fixation, as well as extra syringes for fixation.

Specifications

Dimensions: 33.24 H x 19 W x 28.45 D inches
Weight: ~130 kg
Power: ~185 W, 28 VDC
Temperature: 18 °C during the ovulation cycle, 21 °C after egg fertilization, adjustable by ±1 °C in 1/2 °C increments

Data Acquisition

12 channels of analog data: temperatures from the 3 main FEU compartments, fluid loop water temperature, electronics box air temperature.
Single channel of Pulse Code Modulation data: centrifuge rpm information, discrete hardware status.

Related Ground-Based Hardware

Engineering Development Unit (EDU): The EDU is a fully functional nonflight version of the FEU, used as a training and demonstration unit.

Hardware Publications

- Schmidt, G.K., S.M. Ball, T.M. Stolarik, and M.T. Eodice: *Development and Flight of the NASA Ames Research Center Payload on Spacelab-J*. NASA TM-112273, July 1993.
- *Life Sciences Laboratory Equipment (LSLE) On-line Catalog*. NASA, 1998. http://lifesci.arc.nasa.gov:100/lsle/.

Missions Flown 1991-1995

SL-J/STS-47

Frog Environmental Unit (FEU)

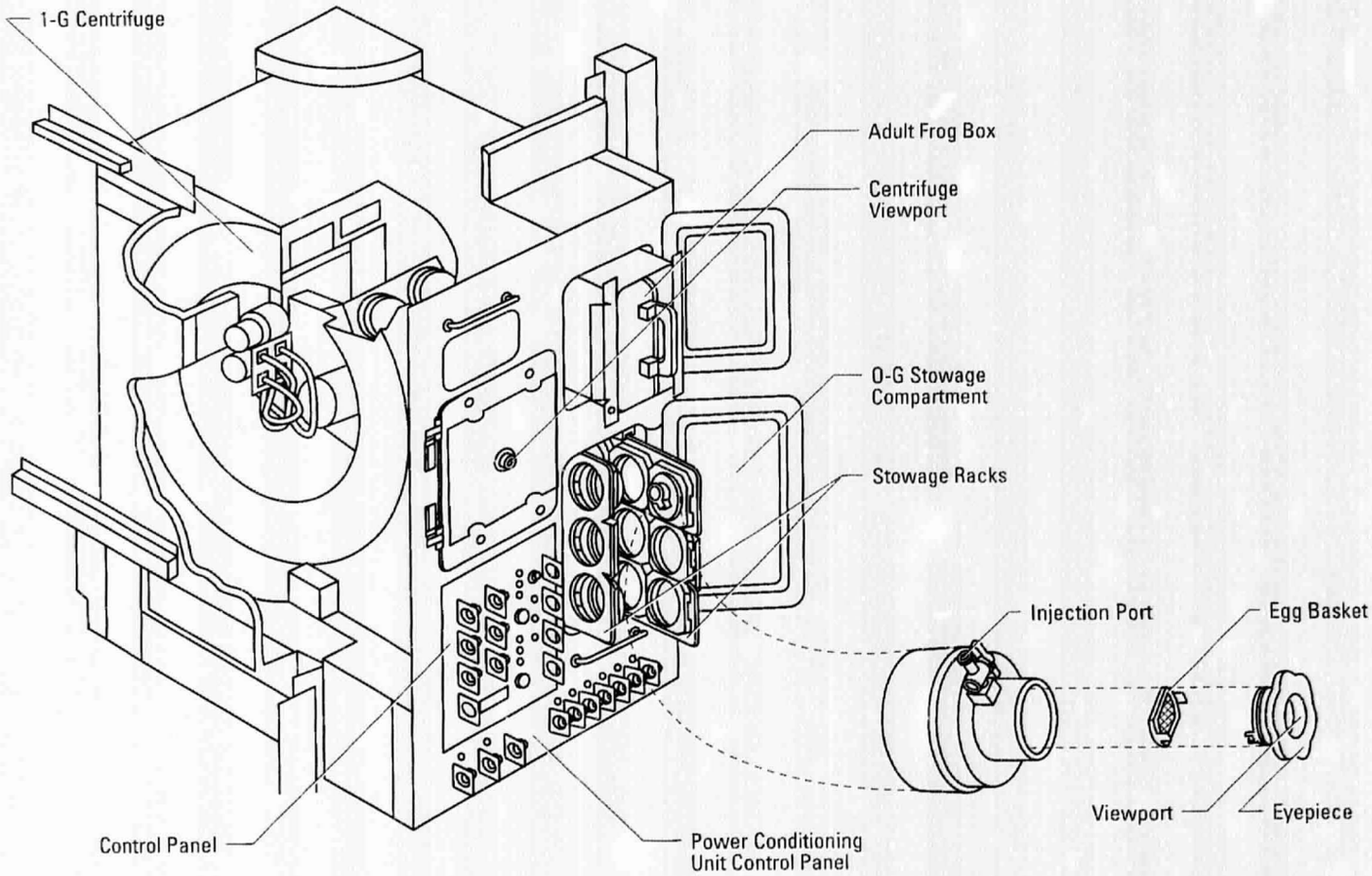

Frog Environmental Unit **Egg Chamber Unit**

Hardware Description

The Gas Exchange Measurement System (GEMS) is designed to measure plant photosynthesis, respiration, transpiration, and other environmental parameters within the Russian Svet Greenhouse on the Mir space station.

Subsystems

Leaf Bag Assemblies: Within the Svet growth chamber, these assemblies enclose the aerial parts of the plants and the gaseous environment immediately around them. Each assembly consists of a biax nylon bag with a hard polycarbonate top, held to its base by telescoping aluminum legs. Sensors within the bags measure light levels, leaf temperature, and air temperature.

Air Filtration and Integration Assembly: Located outside of the Svet growth chamber, this assembly ensures that the concentration of gases in the air leading to the Leaf Bags is uniform. It consists of an aluminum top holding a biax nylon integration bag, an air filter, and a blower fan.

Gas Analyzer System (GAS): The GAS measures infrared absorption of CO_2 and H_2O in the air entering and exiting the Leaf Bag Assembly. It can also measure air flow rate, air temperature, and air pressure. Measurements are made every 3 seconds and detect CO_2 and H_2O differences of 1/5000 for accurate net photosynthesis (Pn) and transpiration determination.

Moisture Probe Packing Bundle (MPPB): The MPPB contains sensor probes placed in groups along the plant rows of the Svet root module. Each sensor probe contains an internal heater and temperature sensor. The heating and cooling profiles of the probes allow determination of soil moisture content.

Environmental Data System (EDS) and Data Collection and Display System: The EDS receives, encodes, and stores data from environmental sensors in various GEMS subsystems, including the Leaf Bag Assemblies, the GAS, and the Svet root module. It also controls fan speed and collects data from the soil moisture probes, once inserted in the Svet root module. All data are stored in and displayed on the Data Collection and Display System, an IBM model 750c notebook computer with software to control GEMS functions. Calibrated data are displayed in English and Russian.

Power Distribution System: This system transforms 27 VDC Mir power to the various voltages required by the GEMS electronic units and provides switchable control of other electronic components.

Water Flow Meters: The meters measure Svet water injection volume, allowing accurate water balance measurements to be made on the Svet root modules.

Specifications

Dimensions: N/A
Weight: 39 kg
Power: 4 amps (maximum continuous current)
Air Flow Range: adjustable 5–50 L/min (each leaf chamber)
Air Pressure Range: cabin pressure
Humidity Range: cabin humidity

Data Acquisition

CO_2, H_2O, O_2 and light levels; leaf, air, and soil temperature; soil moisture; air pressure and flow rate; absolute pressure; humidity; water injection volume

Related Ground-Based Hardware

None

Hardware Publications

- Salisbury, F.B., G.E.Bingham, W.F.Campbell, D.L. Carman, D.L. Bubenheim, B. Yendler, and G. Jahns: Growing Super-Dwarf Wheat in Svet on Mir. *Life Support & Biosphere Science*, vol. 2, 1995, pp. 31–39.

Missions Flown 1991-1995

NASA/Mir Phase 1A/STS-71/STS-74

Gas Exchange Measurement System (GEMS)

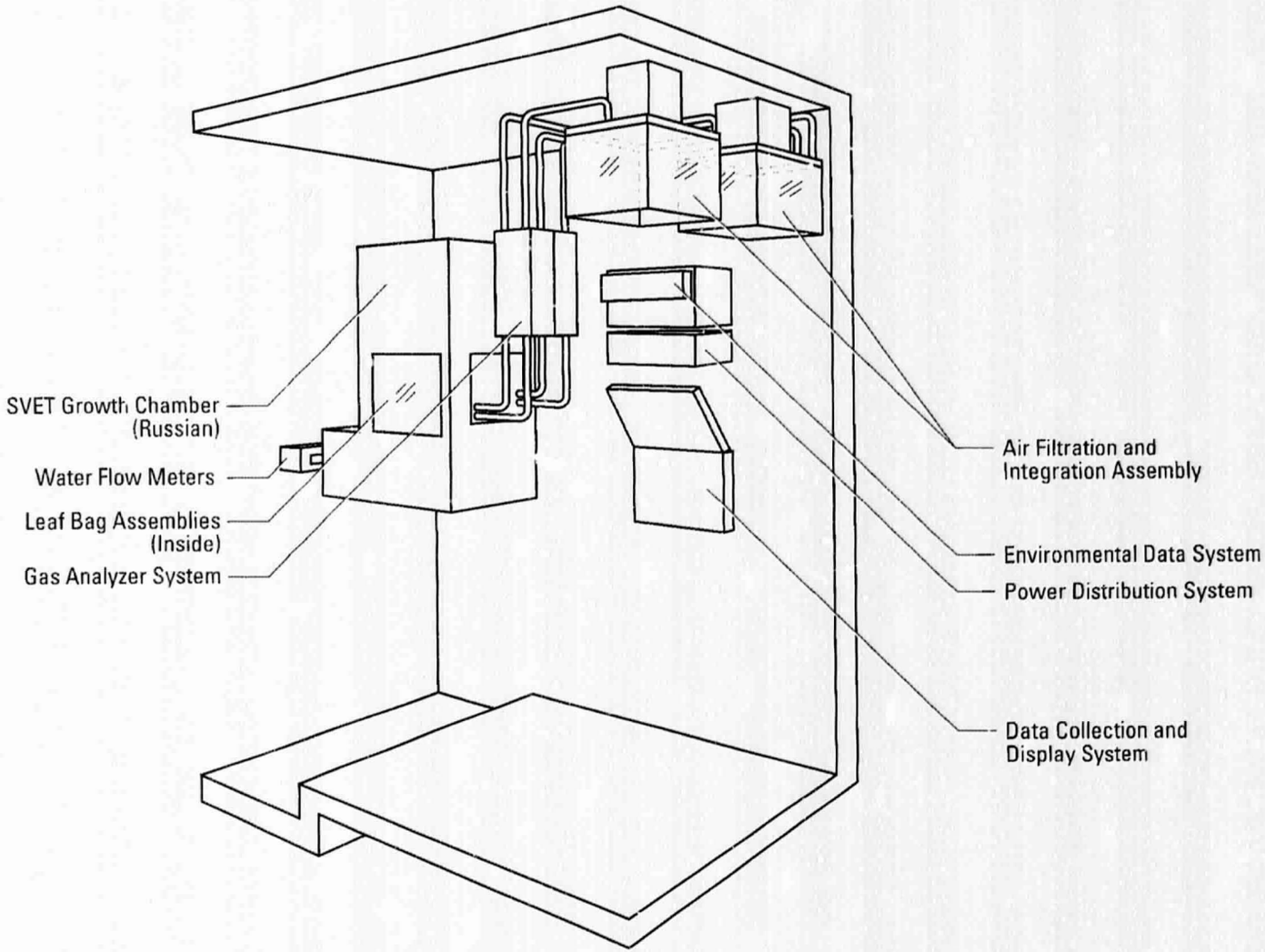

Hardware Description

The General Purpose Transfer Unit (GPTU) permits transfer of rodents in cages from the Research Animal Holding Facility (RAHF) to the General Purpose Work Station (GPWS). The GPTU has a Lexan frame with a sliding access door that interfaces with both the RAHF and the GPWS. A Tyvek sock attached to the frame encloses the rodent cage during transfer. The GPTU is specifically designed to provide a second level of particulate containment. For interface with the RAHF, an adapter is required.

Specifications

Dimensions: Frame: 12 x 8 x 3 inches, Sock: 25 x 15 inches
Weight: 4.1 lbs
Power: N/A

Data Acquisition

None

Related Ground-Based Hardware

None

Hardware Publications

- Bonting, S.L. Animal Research Facility for Space Station Freedom. *Advances in Space Research*, vol. 12(1), 1992, pp. 253–257.
- *Life Sciences Laboratory Equipment (LSLE) On-line Catalog*. NASA, 1998. http://lifesci.arc.nasa.gov:100/lsle/.

Missions Flown 1991-1995

SLS-1/STS-40, SLS-2/STS-58

General Purpose Transfer Unit (GPTU)

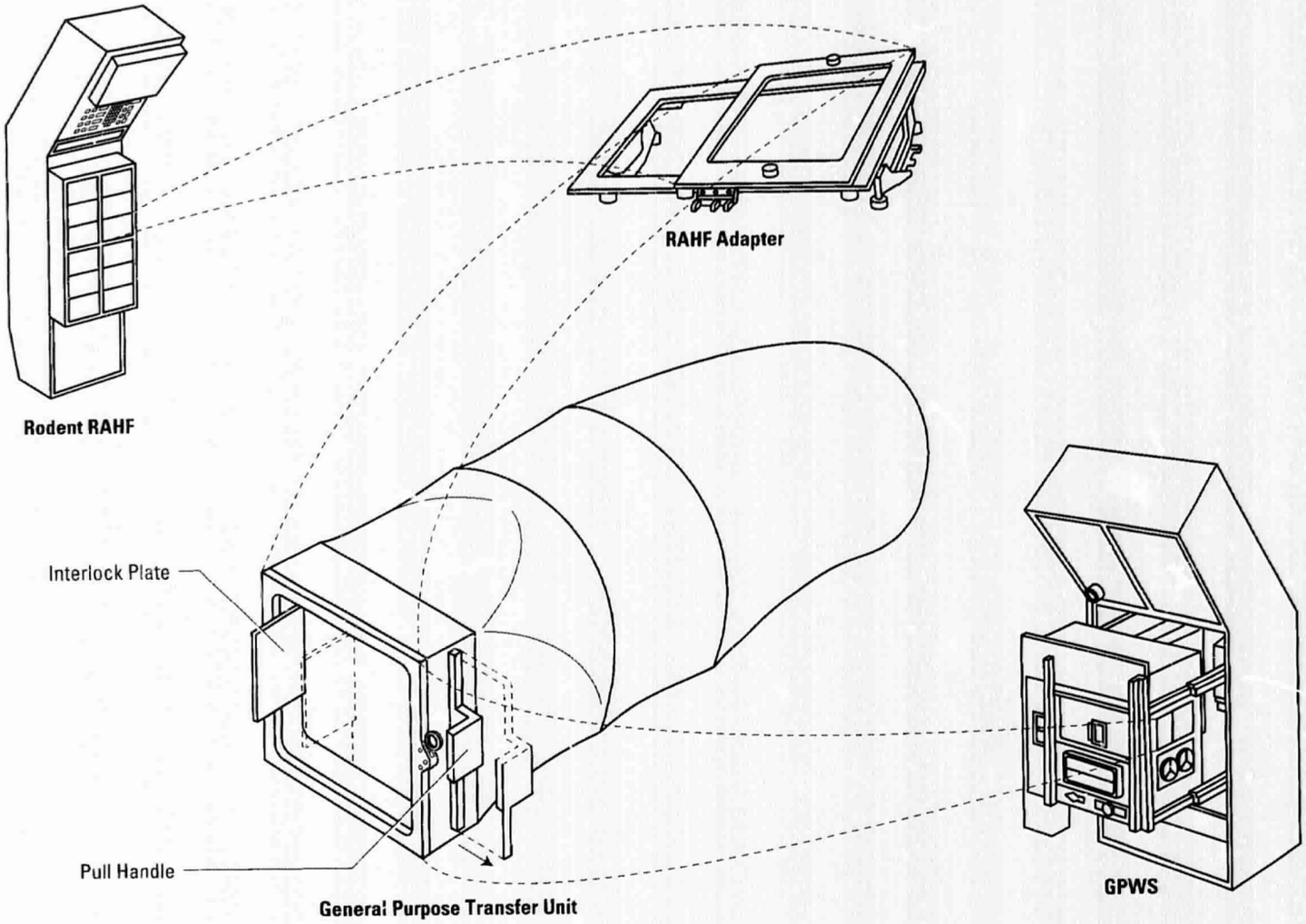

Hardware Description

The General Purpose Work Station (GPWS) is a multipurpose support facility for conducting general laboratory operations within the Spacelab. The GPWS supports biological experiments, biosampling, and microbiological experiments, and it serves as a closed environment for containment while routine equipment repair or other inflight operations are performed. The GPWS provides the essential working space and accommodates the laboratory equipment and instruments required for many life sciences investigations. Housed in a Spacelab double rack, the GPWS is self-contained, apart from power, data, and cooling interfaces.

Subsystems

Cabinet: The rack-mounted, retractable cabinet provides laboratory work bench accommodations, including airflow, power, and lighting. The front door of the cabinet allows large experimental hardware to be transferred inside during flight. Ports on the front and side of the cabinet allow two crew members to simultaneously perform tasks inside the cabinet using gauntlets. The entire cabinet may be locked into one of three extended positions during use or fully recessed into the rack for stowage. Waste may be deposited in a disposal compartment through rubber slits on the rear wall of the internal work volume.

Containment Control System: The system is designed to clean the air within the work volume and provide biohazard protection. It includes a circulation blower, a main Trace Contaminant Control System (TCCS) canister, a vent canister, High Efficiency Particulate Air (HEPA) filters, absorbent fiberglass blotter pads, and a manually-operated Air Diverter Valve. The GPWS incorporates two modes of operation: normal, for nominal operations, and recirculation, to facilitate cleanup in the event that fluid and debris are released into the cabinet.

Electrical System: The electrical system accepts AC/DC power from the Spacelab for experiment-related equipment. Panels on the front and inside the cabinet volume contain power switches and temperature controls.

Thermal Control System: The Thermal Control System controls air temperature inside the cabinet, which can be maintained between 20 and 29 °C. Caution indicators are illuminated when the system fails to maintain the cabinet air temperature to within 2 °C of a set point.

Specifications

Dimensions: Occupies 1 Spacelab/ESA double rack
Weight: 343.25 kg (765 lbs)
Power: 50 W experiment power, total consumption 500 W
Work Space: 27.9 x 24 x 22 inches

Data Acquisition

None

Related Ground-Based Hardware

None

Hardware Publications

- Dalton, B.P., G. Jahns, J. Meylor, N. Hawes, T.N. Fast, and G. Zarow: *Spacelab Life Sciences-1 Final Report.* NASA TM-4706, August 1995.
- Savage, P.D., W.E. Hinds, R. Jaquez, J. Evans, and L. Dubrovin: *Experiment Kits for Processing Biological Samples Inflight on SLS-2.* NASA TM-4685, 1995.
- Schmidt, G.K. and A.A. Flippen: *A Chemical Containment Model for the General Purpose Work Station.* SAE Technical Paper Series 941286, June 1994.

Missions Flown 1991-1995

SLS-1/STS-40, SLS-2/STS-58, SL-J/STS-47

General Purpose Work Station (GPWS)

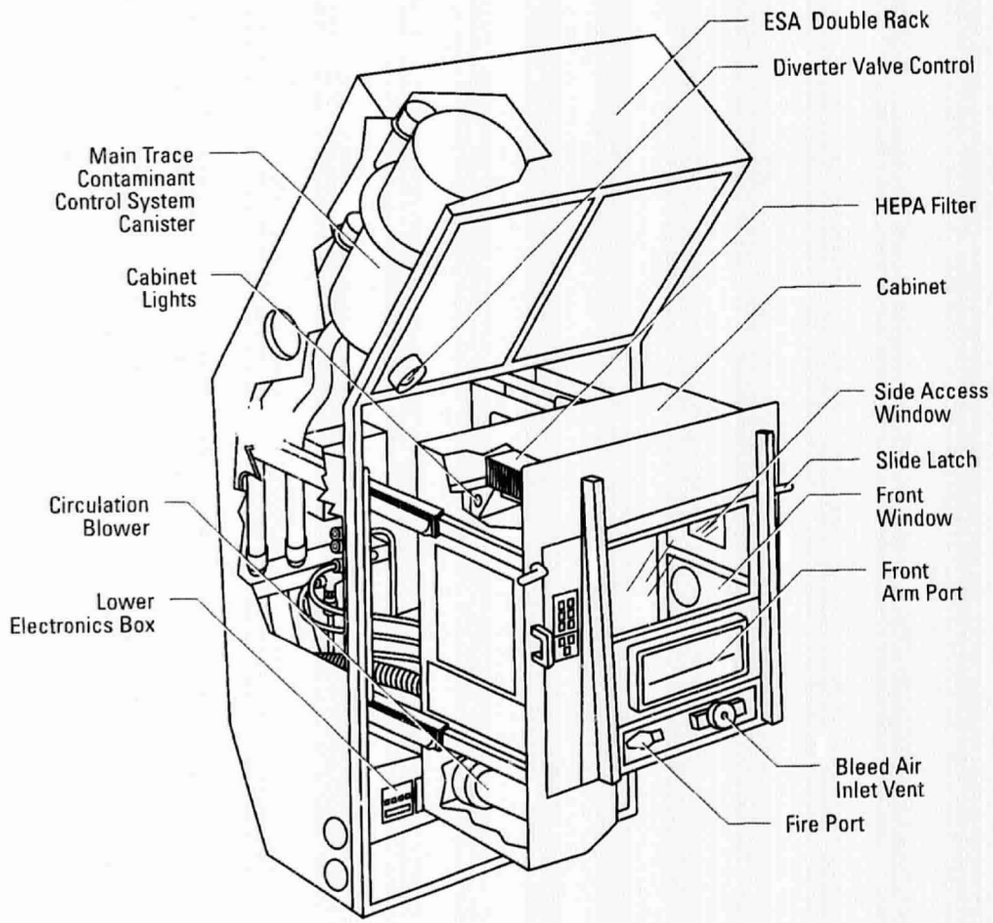

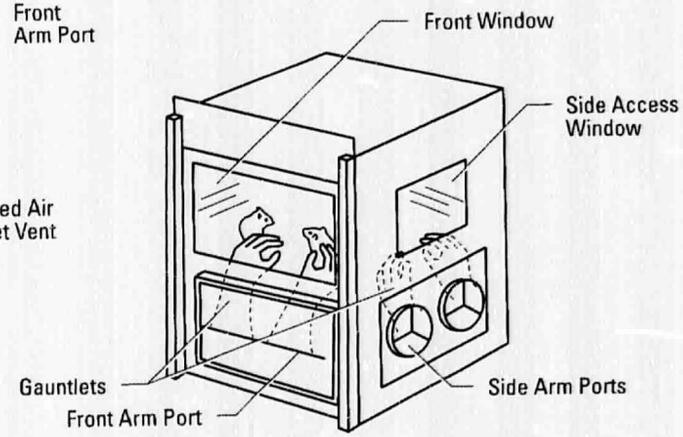

Side View of Cabinet

Gravitational Plant Physiology Facility (GPPF)

Hardware Description

The Gravitational Plant Physiology Facility (GPPF) supports plant studies within the Spacelab. The facility is designed to perform two specific gravitational plant physiology experiments, but it may be adapted to various gravitropic, phototropic, circumnutational, or other studies. Capabilities include 1-G controls and video monitoring.

Subsystems

Plant Cubes: The seeds are planted into small wells in a tray containing a commercial potting mixture. The trays are placed in a light-tight cube, which attaches to the rotors or the Recording and Stimulus Chamber. The cubes are constructed to allow infrared video of the plants inside. The cubes also have a septum for gas sampling and are available in two configurations with varying number of planting wells.

Control Unit: The Control Unit distributes power to experiment hardware and controls the functions of GPPF instruments, which are displayed on a TV monitor.

Culture Rotor: The Culture Rotor contains two 1-G centrifuges to simulate Earth gravity. Each rotor contains 16 plant cubes and is individually controlled by the Control Unit. Plant cubes are placed on the rotors prior to transfer to other GPPF instruments.

Test Rotor: The Test Rotor operates in the 0–1.5 G range. The system includes an internally-mounted, infrared-sensitive video camera head. As the plant cubes rotate, they move in succession across the video camera field of view to permit time lapse video recording of plant bending.

Recording and Stimulus Chamber (REST): Within the REST, plants in four plant cubes can be time-lapse videotaped before and after exposure to blue light, using infrared recording. The camera takes 9-second exposures every 10 minutes.

Video Tape Recorders: Two redundant video tape recorders are used to record images from the REST and Test Rotor cameras. They record the same information to ensure successful data collection.

Mesocotyl Suppression Box (MSB): Within the MSB, seedlings are exposed to a red light spectrum for up to 10 minutes, which suppresses the growth of the mesocotyl to ensure uniform and straight growth of the plant and to prevent interference in the study of the gravitropic response.

Plant Holding Compartment (PHC): The thermally regulated PHC contains gas sampling syringes, rotor counterweights, plant cubes, and a kit containing seeds and planting implements.

Specifications

Dimensions: Occupies 1 Spacelab double rack
Weight: 181.75 kg (without stowage)
Power: Unknown
Temperature: 18 to 22.5 ± 1 °C

Data Acquisition

Video, temperature, doors open, rotor activity

Related Ground-Based Hardware

None

Hardware Publications

- Heathcote, D.G., D.K. Chapman, A.H. Brown, and R.F. Lewis: The Gravitational Plant Physiology Facility: Description of Equipment Developed for Biological Research in Spacelab. *Microgravity Science and Technology*, September 1994, vol. 7(3), pp. 270–275.
- Rudolph, I.L., R.L. Schaefer, D.G. Heathcote, and D.K. Chapman: Development of Spaceflight Experiments: I. Biocompatibility Testing—the IML-1 Experience (abstract). *American Society of Gravitational Space Biology Bulletin*, vol. 6(1), October 1992, p. 47.
- A.H. Brown: *Gravitropic Responses of Plants in the Absence of a Complicating G-Force.* NASA TM-4353, February 1992, pp. 3–12.

Missions Flown 1991-1995

IML-1/STS425

Gravitational Plant Physiology Facility (GPPF)

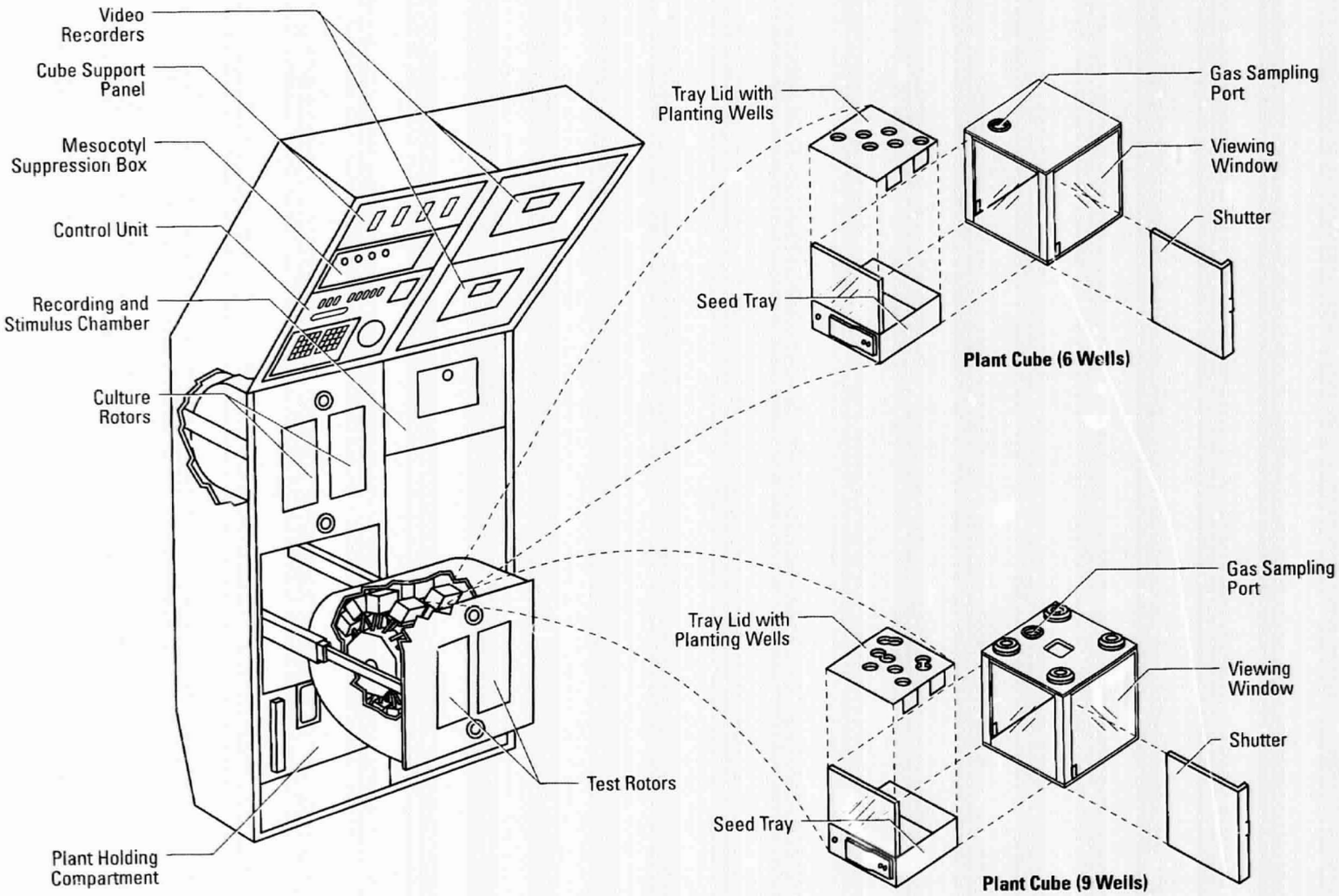

GPPF: Middeck Ambient Stowage Insert (MASI)/Plant Carry-On Container (PCOC)

Hardware Description

Both the Middeck Ambient Stowage Insert (MASI) and the Plant Carry On Container (PCOC) are support hardware for the Gravitational Plant Physiology Facility (GPPF) experiments. The MASI is designed to hold soil trays, while the PCOC holds plant cubes.

Each is constructed of a standard aluminum box, with a hinged cover and latches mounted inside the lid. Inside the lid of the box is an Ambient Temperature Recorder to automatically sense and record internal temperatures during the mission, a hex key, and seed strips. The portion of the box below the lid contains five layers of experiment support hardware. These are packages of experiment soil trays and experiment plant cubes, which are used within the GPPF. The entire package is protected by Pyrel foam into which the soil trays and plant cubes are inserted. They are further contained by Nomex straps and tape.

Specifications

Dimensions: PCOC: 50.3 x 43.5 x 24.0 cm
MASI: 37 x 11 x 9 cm
Weight: PCOC: 8.64 kg (with foam packing)
MASI: 2.24 kg
Power: N/A

Data Acquisition

None

Related Ground-Based Hardware

None

Hardware Publications

None

Missions Flown 1991-1995

IML-1/STS-42

Middeck Ambient Stowage Insert (MASI)
Plant Carry-On Container (PCOC)

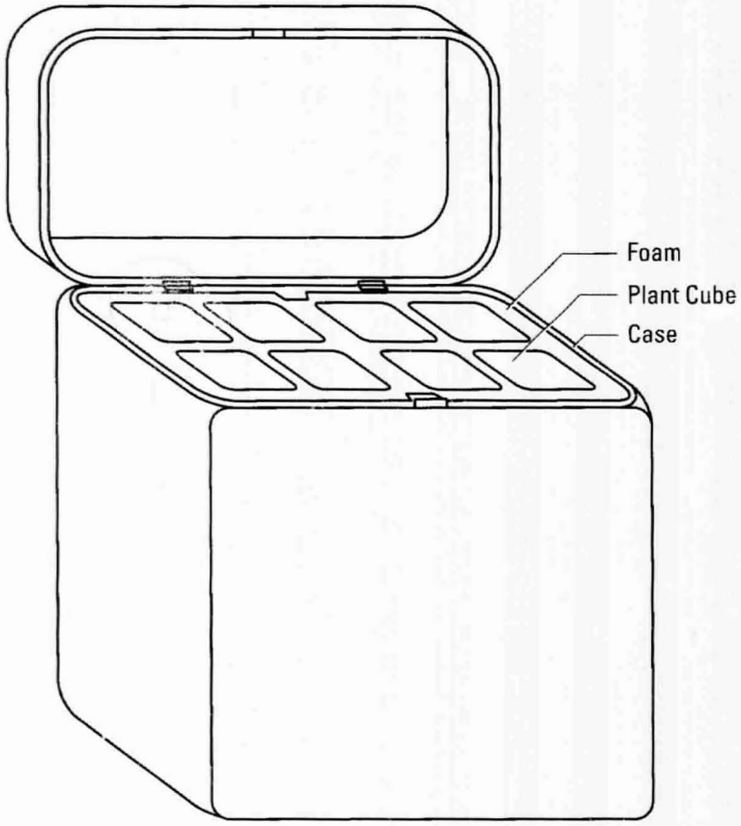

Plant Carry-On Container

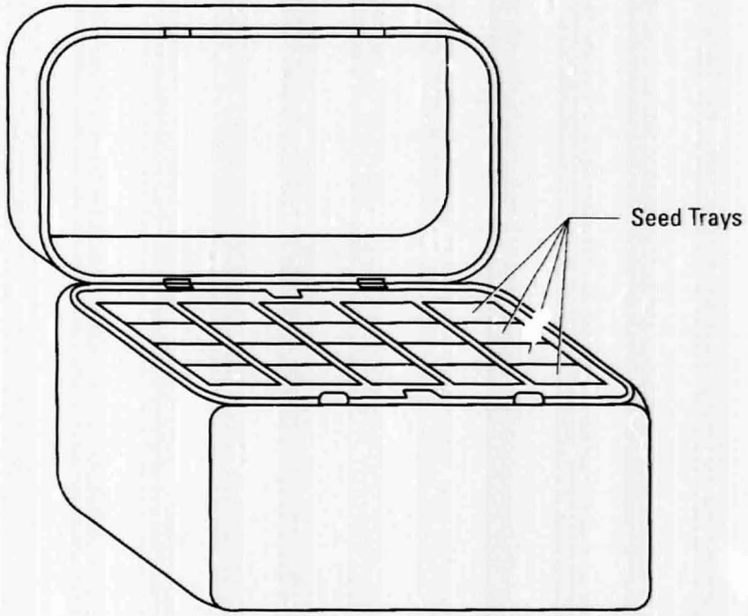

Middeck Ambient Stowage Insert

Hardware Description

The four Jellyfish Kits contain the necessary materials to maintain jellyfish during flight, measure the radiation dose, and apply fixative to specimens. The kits must be stored in climate-controlled containment during flight to provide a constant 28 °C ambient temperature for the specimens. Various hardware items are available to support experiment activities.

Subsystems

Jellyfish Bags/Kits: Jellyfish are maintained in polyester bags with polyethylene lining filled with artificial sea water, at a ratio of 1:3, air:solution. The bags are carefully cleaned and tested for biocompatibility prior to use. Kit #1 contains nonoperative single compartment bags that do not require crew manipulation on orbit. Lithium fluoride radiation rod dosimeters are added to six of the 18 bags in Kit #1 before they are heat-sealed. Kit #2 contains eight multicompartment syringe/bag assemblies with one to three syringes of fixative attached (three-syringe/bag assembly illustrated). Each syringe bag has two outer bags for containment and is individually tetherable to prevent it from floating away during experiment operations in microgravity. Kit #3 is used to hold the fixed specimens from Kit #2. Kit #4 contains small specimen flasks containing the jellyfish in artificial sea water. The 40 cc culture flasks are made of optically clear polyethylene and are used for videotaping jellyfish swimming patterns in microgravity.

Chemical Delivery System (CDS): The Chemical Delivery System (CDS) offers the capability to introduce chemicals to the jellyfish during flight. The CDS consists of syringes mounted via plastic housing to polyethelene-lined Kapak bags. The system is cleaned and tested for biocompatibility before launch. Inner and outer plastic bags provide triple containment.

Specifications

Dimensions: N/A
Weight: 20.48 lbs total
Power: N/A
Capacity: 186 cc and 100 jellyfish/bag
Temperature: constant 28 °C

Data Acquisition

None

Related Ground-Based Hardware

None

Hardware Publications

- *Life Sciences Laboratory Equipment (LSLE) On-line Catalog*. NASA, 1998. http://lifesci.arc.nasa.gov:100/lsle/.

Missions Flown 1991-1995

SLS-1/STS-40

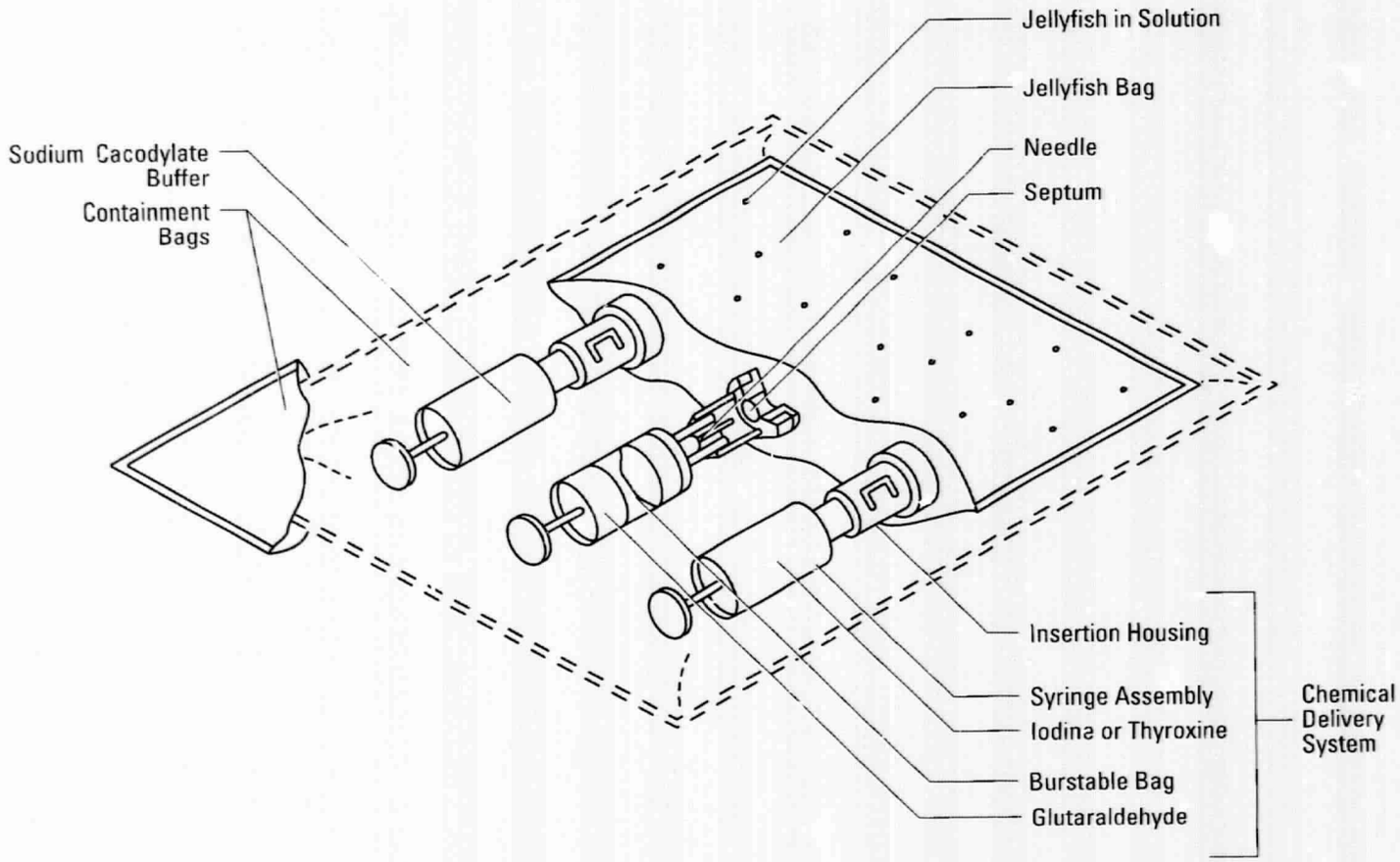
Jellyfish in Solution
Jellyfish Bag
Needle
Septum
Sodium Cacodylate Buffer
Containment Bags
Insertion Housing
Syringe Assembly
Iodine or Thyroxine
Burstable Bag
Glutaraldehyde
Chemical Delivery System

Hardware Description

Several NASA-designed kits were provided for the NASA/Mir avian developmental biology experiments collectively titled "Incubator," which used the Russian IMBP incubator, and the plant biology experiment titled "Greenhouse," which used the Russian Svet Greenouse and the NASA/P.I.-provided Gas Exchange Measurement System (GEMS).

Fixative Kits (Incubator): Fixative Kits consist of double-layered, double-clamped plastic bags that hold the required volume of paraformaldehyde fixative. The design allows the crew member to introduce into the bag the quail egg to be fixed while precluding exposure of the crew member to the fixative. Each of the fixative bags are enclosed in turn by a large outer bag, also clamped. The bags are stored within an aluminum box. Each box holds 16 fixative bags.

Harvest Kit: The kit includes instruments for harvesting the plants. Among other elements, these instruments include long probes (overall, 40 cm; probe arm, 32 cm) with small scissors or tweezers on one end.

Fixative Kit (Greenhouse): These bags of chemical fixative contain a solution developed and tested by Dr. Campbell at Utah State University, based on a formula of MacDowell and Trump: 4 parts formaldehyde; 1 part glutaraldehyde, buffered with Na_2PO_4, adjusted to pH 7.2 with NaOH; and sodium azide added to prevent fungal growth. Like the incubator fixative bags, each bag is triple sealed to prevent the release of hazardous chemicals into the cabin atmosphere.

Glovebag Kit: The glovebag is a large, clear plastic bag that allows a single user access to its interior through two rubber gloves on the front surface of the bag. A small airlock entry port is located at the rear of the bag, which allows the crew member to insert samples into the glovebag. The entry port can be rolled up and clamped shut, if necessary.

Filter/Pump Kit: The kit consists of a filter and pump for evacuating the air inside the glovebag, in case of a hazardous fixative spill.

Dry Stowage Kit: The dry stowage kit includes plastic bags containing silica gel as desiccant. The kit stows plant samples not placed into chemical fixatives.

Observation Kit: The kit includes the camera bracket and ruler/color chart to be included in photographs. The camera itself is not part of the kit.

Logbook Kit: The logbook is used to record crew observations.

Specifications

Dimensions: N/A
Weight: N/A
Power: N/A

Data Acquisition

None

Related Ground-Based Hardware

None

Hardware Publications

- *Life Sciences Laboratory Equipment (LSLE) On-line Catalog*. NASA, 1998. http://lifesci.arc.nasa.gov:100/lsle/.

Missions Flown 1991-1995

NASA/Mir Phase 1A/STS-71/STS-74

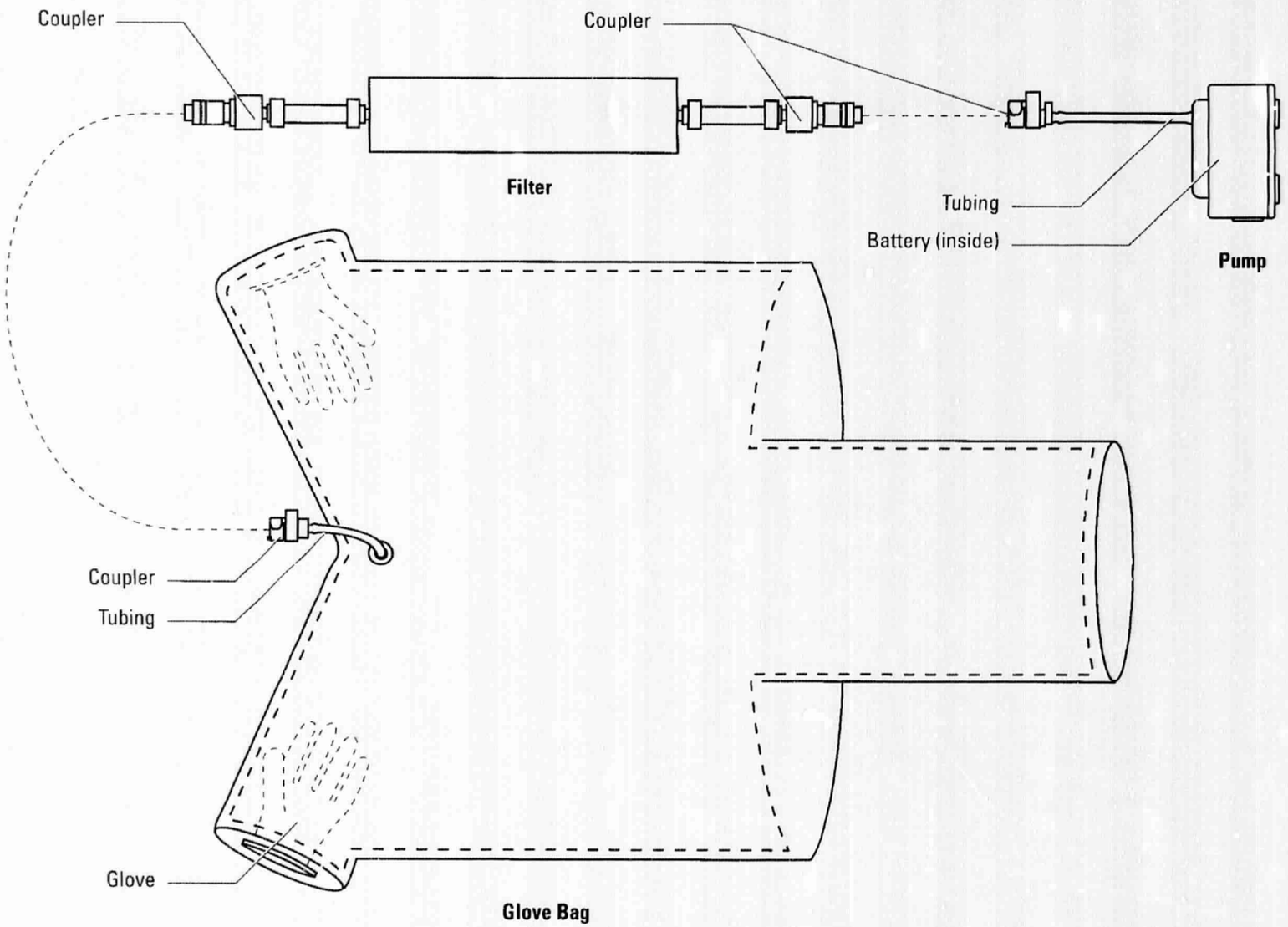
Coupler
Coupler
Filter
Tubing
Battery (inside)
Pump
Coupler
Tubing
Glove
Glove Bag

Hardware Description

The camcorder is a commercial 8-mm model. It has a two-thirds inch built-in Cathode Ray Tube (CRT) to act as a viewfinder or tape playback screen. The 8-mm tapes record both audio and video and run for 2 hours. Screw-on filters and wide conversion and teleconversion lenses can be added.

Along with standard features, the camera is equipped with a uni-directional microphone, a zoom lever with macro button, a focus ring and focus selector, a white balance selector to enable accurate recording of colors, a high speed shutter selector to properly capture fast-moving objects, a backlight compensation button, an AF/Zone Select button to provide automatic focusing within a selected zone in the viewfinder, and a counter memory button to enable locating the same scene for repeated viewing.

When used for filming the jellyfish experiment on SLS-1, the camcorder was mounted on a multiuse bracket assembly, which also held a jellyfish specimen flask at a fixed distance. This enabled accurate, steady focusing and filming of the movement of the jellyfish in microgravity.

Specifications

Dimensions: 4.8 x 5.4 x 10.2 inches
Weight: 1.2 kg
Power: 12 VDC battery pack

Data Acquisition

Video

Related Ground-Based Hardware

None

Hardware Publications

- Dalton, B.P., G. Jahns, J. Meylor, N. Hawes, T.N. Fast, and G. Zarow: *Spacelab Life Sciences-1 Final Report.* NASA TM-4706, August 1995, p. 10.

Missions Flown 1991-1995

SLS-1/STS-40

Olympus 802 Camcorder

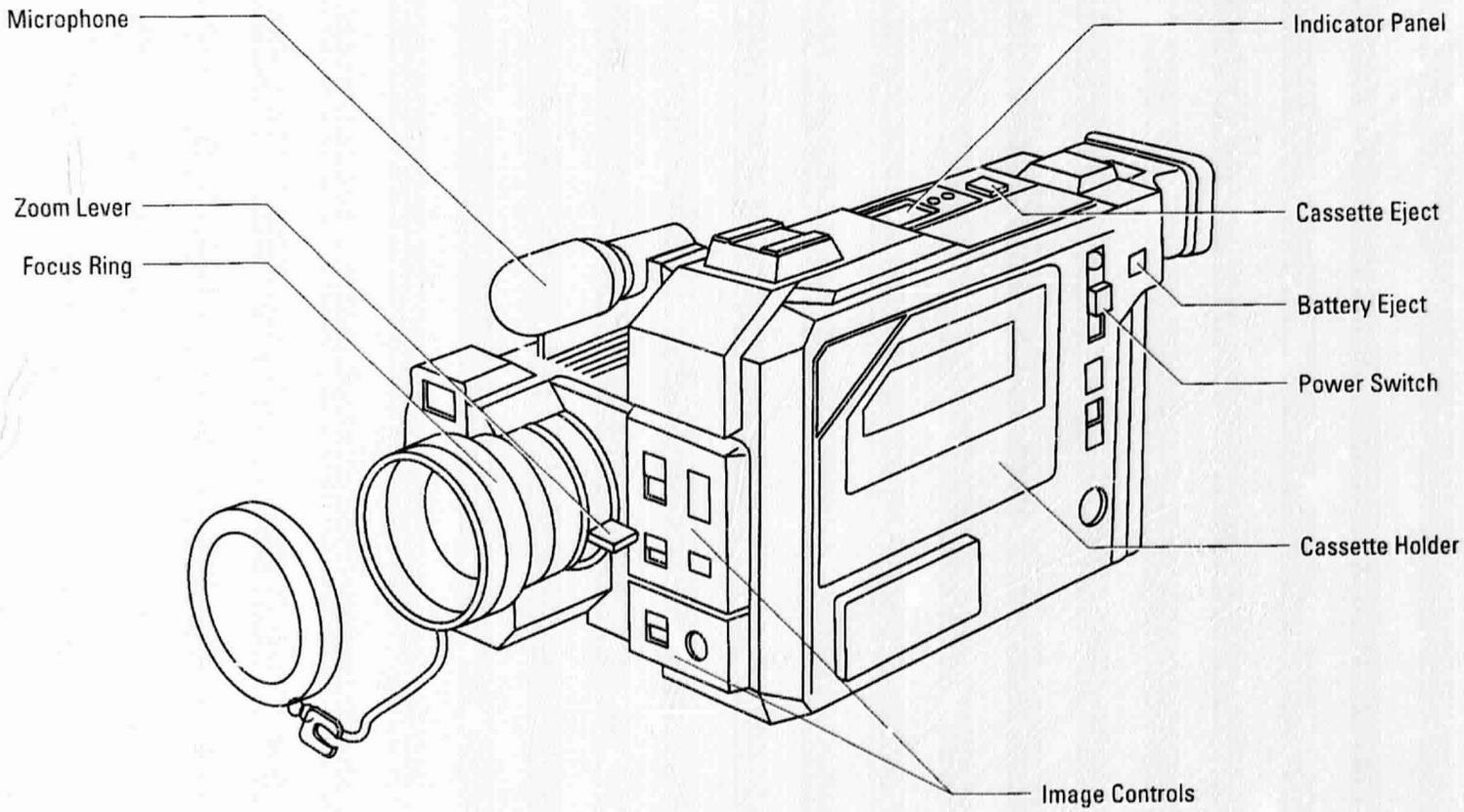

Hardware Description

The Plant Growth Unit (PGU) is a self-contained system designed to support whole plant growth. The PGU occupies a single middeck locker and can be configured with either six Plant Growth Chambers (PGC) or five PGCs and the Atmospheric Exchange System (AES).

Subsystems

Plant Growth Chambers (PGC): The Plant Growth Chambers (PGCs) are the containers in which experiment subjects are grown. Each PGC consists of a Teflon-coated, anodized-aluminum base and Lexan cover secured to the base by four screws. A thermistor is inserted into the center of each base.

Atmospheric Exchange System (AES): The AES replaces one of the PGCs and circulates filtered air through four of the chambers.

Electrical System: The PGU operates on electrical power supplied by the Space Shuttle. When external power is interrupted, a non-rechargeable battery pack maintains power to the data acquisition electronics and tape recorder.

Temperature Control System: Temperature is controlled by heat from three PGU lamps and one strip heater as well as the flow of middeck cabin air through the unit. Temperature within each PGC is measured by a thermistor or temperature probe. The difference between the set point temperature and the average temperature is used by the control electronics to regulate the speed of the two cooling fans that circulate cabin air through the PGU. To maintain the desired temperature when the lamps are switched off, the strip heater is activated and the fans continue to run. The temperatures of the six PGCs and the ambient temperature are measured every 15 minutes and automatically recorded on the data tape.

Lighting System: Lamps are located within the interior of the PGU to simulate a day/night cycle (16 hours on, 8 hours off). The PGU lighting system consists of a bank of three fluorescent lamps containing Duratest Vitalite phosphor lenses, a reflector, an aluminum housing, and associated circuitry.

Data Acquisition System: Data formatting circuits arrange digitized temperature and light status signals into a serial form and data time tags in days, hours, and minutes. Data are recorded every 15 minutes on the tape recorder.

Specifications

Dimensions: 411 x 226 x 483 mm
Weight: 67 lbs
Power: 28 VDC

Data Acquisition

Temperature, lights on/off

Related Ground-Based Hardware

None

Hardware Publications

None

Missions Flown 1991-1995

CHROMEX-01/STS-29 (1989), CHROMEX-02/STS-41 (1990), CHROMEX-03/STS-54, CHROMEX-04/STS-51, CHROMEX-05/STS-68, CHROMEX-06/STS-63

Plant Growth Unit

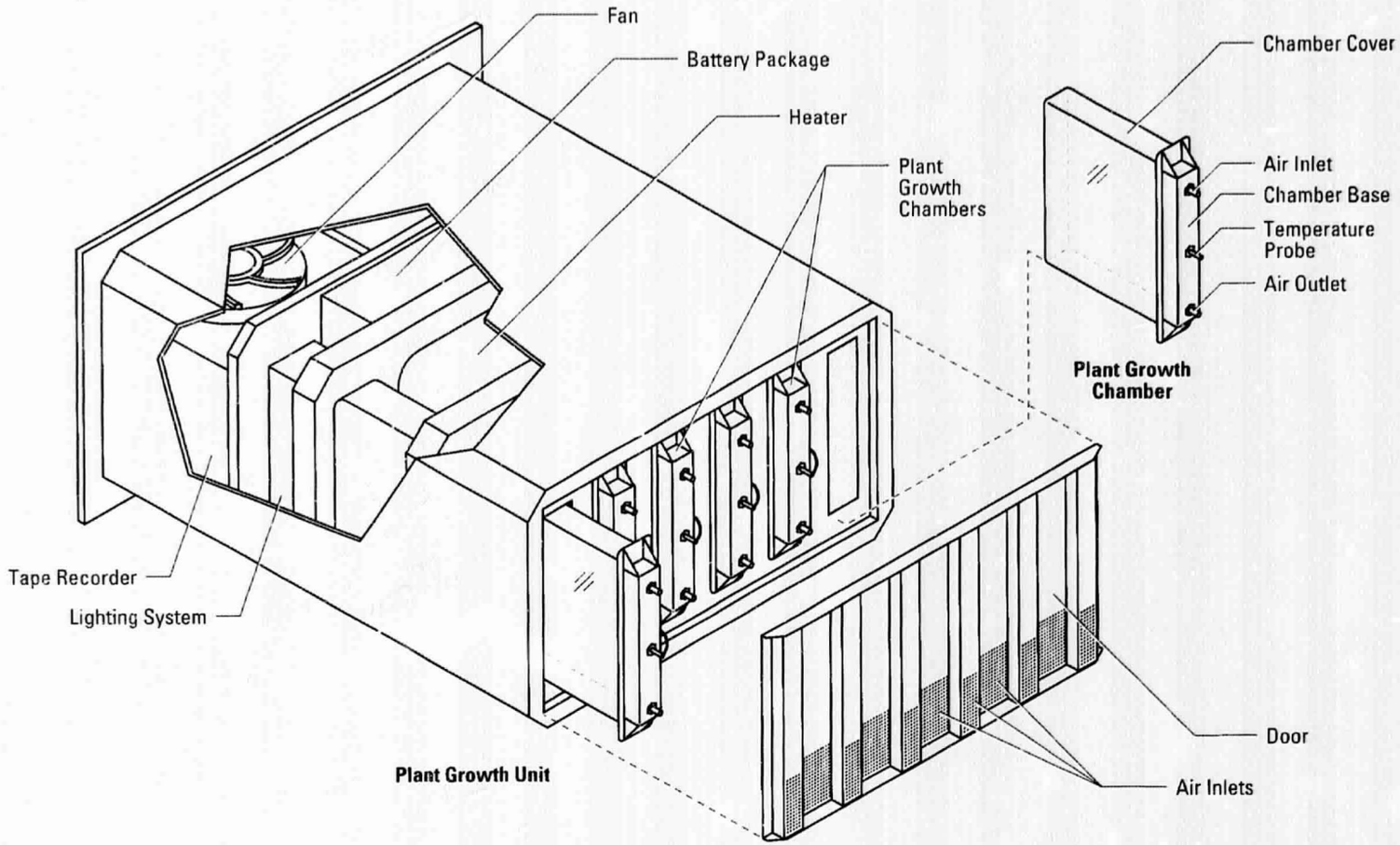

Hardware Description

The Atmospheric Exchange System (AES) replaces one of six standard Plant Growth Chambers in the Plant Growth Unit (PGU) and circulates filtered cabin air by means of a pump through four of the chambers. The fifth serves as a control chamber with no air flow. An alarm circuit is triggered when there is inadequate flow through the AES or low voltage to the primary circuit. A built-in passive radiation dosimeter collects data on the radiation environment of the PGU.

Subsystems

Filter Cartridge: The AES filter cartridge contains absorbents within a stainless steel tube. The cartridge passively regulates CO_2 by flowing the air stream over a lithium hydroxide (LiOH) bed. Some air can bypass this bed via the bypass tube, where no CO_2 is removed. The flow rate is variable from 0 to 20 L per hour. The desired flow split, and therefore the desired CO_2 concentration, is obtained by installing a variable restriction orifice in the bypass line. The total air stream subsequently passes through a trace contaminant control bed consisting of Zeolite, activated carbon, and Purafil. Porous metal discs are used for bed retention and separation, with the inlet disc providing dust filtration.

Specifications

Dimensions: 6 x 22 x 22.5 mm
Weight: 3 lbs
Power: 12 VDC

Data Acquisition

Radiation dosimeter

Related Ground-Based Hardware

None

Hardware Publications

None

Missions Flown 1991-1995

CHROMEX-01/STS-29 (1989), CHROMEX-02/STS-41 (1990), CHROMEX-05/STS-68

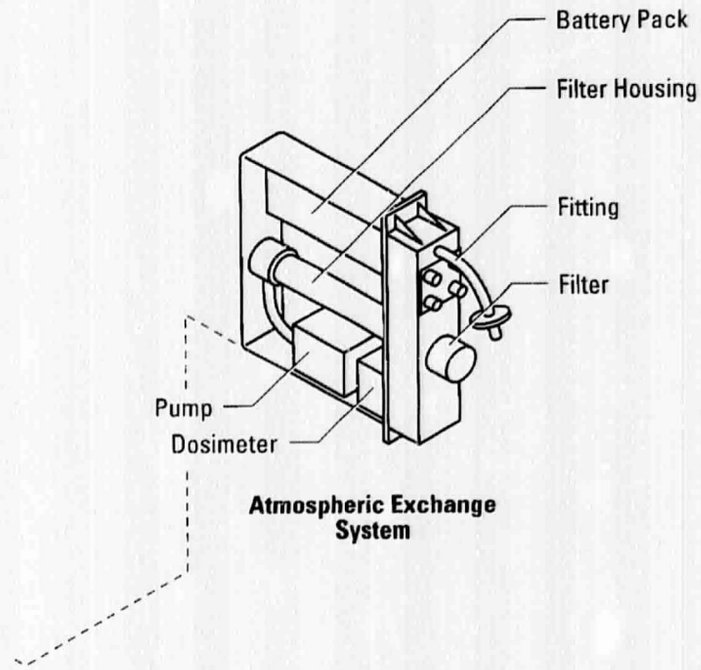

Atmospheric Exchange System

Plant Growth Unit

Hardware Description

The Refrigerator/Incubator Module (R/IM) is a temperature-controlled holding unit flown in the Shuttle middeck. It can be used in place of a standard middeck stowage locker or mounted to the Spacelab Middeck Experiment rack.

The R/IM uses a solid-state heat pump to maintain a cooled or heated internal environment. A fan circulates cabin air through the heat pump/heat sink and is exhausted through ducts in the top and bottom surfaces of the unit's outer shell. Air is not circulated within the internal cavity. A vent valve on the front door automatically controls internal pressure. To accommodate experiments, rail guides and fasteners are provided as a means of mounting up to six shelves of experiment hardware. The interior of the R/IM is divided into two holding cavities.

Specifications

Dimensions: 46 x 47.6 x 27.3 cm
Weight: 19.35 kg
Power: 84 W @ 28 ± 4 VDC

Data Acquisition

None

Related Ground-Based Hardware

None

Hardware Publications

- Bugg, C.E.: *Protein Crystal Growth.* NASA TM-4353, February 1992, pp. 219–224.

Missions Flown 1991-1995

SLS-1/STS-40, IML-2/STS-65, PHCF/STS-46, SL-J/STS-47

Refrigerator/Incubator Module (R/IM)

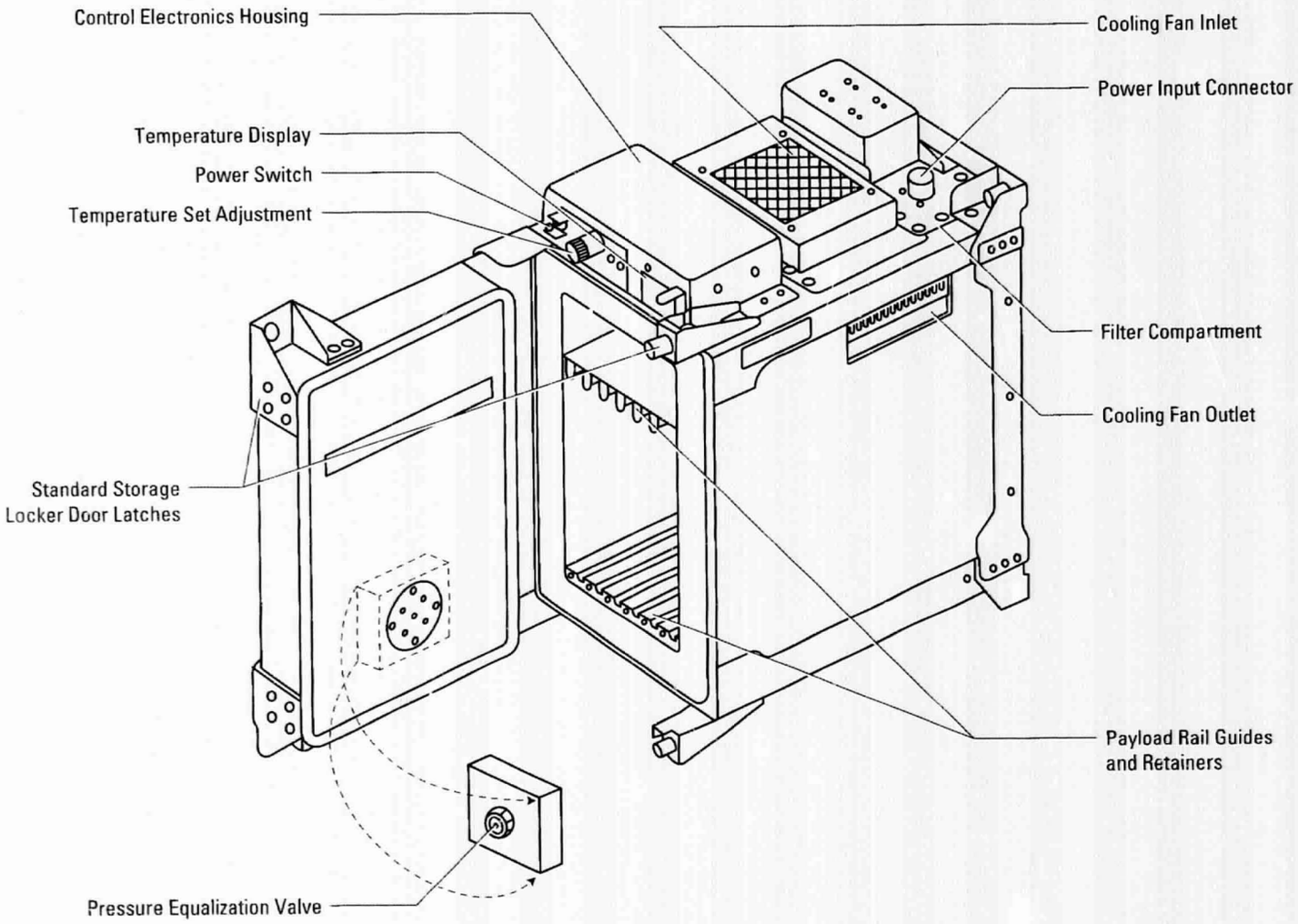

Hardware Description

The Research Animal Holding Facility (RAHF) is an animal habitat for general use within the Spacelab. Animal-specific cages are inserted, as needed, to provide appropriate life support for rodents. Cages can be removed from the RAHF to allow inflight experiment procedures to be conducted.

Subsystems

Rodent Cage: The Rodent Cage Module contains 12 cage assemblies, with each cage housing two rats separated by an internal divider for a total capacity of 24 rats. The cages are removable inflight for transfer to a General Purpose Work Station using the General Purpose Transfer Unit to maintain particulate containment.

Environmental Control System (ECS): The ECS controls temperature and air circulation within the cages and contributes a level of odor and particulate containment to the RAHF system.

Feeding/Waste Management Systems: Rodent food bars are supplied automatically on a demand basis. Directed airflow continuously draws liquid and solid wastes into a waste tray at the bottom of each animal cage where bacterial growth is controlled and odors are neutralized.

Water System: The Water System provides pressurized water via lixits to the rats, while measuring the quantity of water delivered.

Inflight Refill Unit (IRU): For SLS-2, the IRU is used to obtain and transport water from the orbiter middeck galley to the RAHF Water System.

Lighting System: Rat cage illumination is provided on a 12:12 day/night cycle. Each cage lamp provides approximately 2.1 lumens of light at cage floor level. The light cycle for each quadrant of cage assemblies (four cages) can be independently controlled, manually or via an adjustable timer.

Data System: The Data System collects three types of data. Temperature, humidity, water pressure, and air pressure across ECS fans (air flow) are collected as Analog data. Heating, cooling, lighting, and a drinking water out of limit condition are collected as Discrete data. Water delivery and activity are collected as Pulse-code Modulated data. All data are passed to the Spacelab data system for display, recording, and downlink to the ground. Data displayed on board include environmental status, water consumption, and activity. A special subset of data is routed to launch control center computers for display during late access loading and until launch.

Specifications

Dimensions: Occupies 1 Spacelab double rack
Weight: 280 kg (616 lbs)
Power: 324 W, continuous operation (maximum thermal load); 850 BTU/hr
Capacity: 24 Rodents

Data Acquisition

Analog: temperatures, relative humidity, water tank pressure, fan pressure rise; Discrete: heating, cooling, lighting, drinking water out-of-limit; Pulse-code modulated: water consumption, activity

Related Ground-Based Hardware

Ground Data System: Computers and associated peripherals are used to acquire, process, store, and monitor data coming from the RAHF during ground testing.

Hardware Publications

- Dalton, B.P., G. Jahns, J. Meylor, N. Hawes, T.N. Fast, and G. Zarow: *Spacelab Life Sciences-1 Final Report.* NASA TM-4706, August 1995.
- Savage, P.D., M.L. Hines, and R. Barnes: *An Inflight Refill Unit for Replenishing Research Animal Drinking Water.* NASA TM-4684, 1995.

Missions Flown 1991-1995

SLS-1/STS-40, SLS-2/STS-58

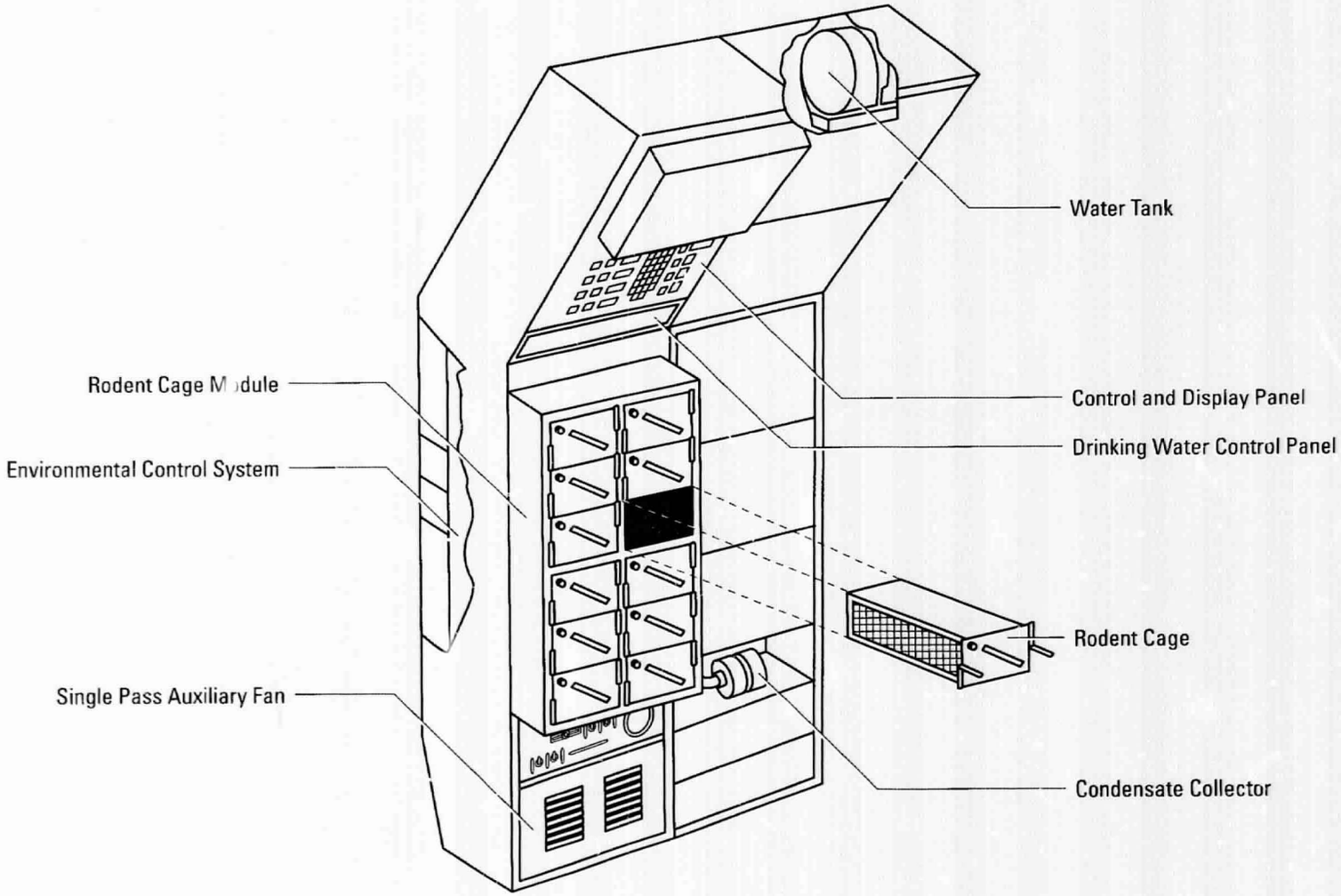
Water Tank
Rodent Cage Module
Control and Display Panel
Drinking Water Control Panel
Environmental Control System
Rodent Cage
Single Pass Auxiliary Fan
Condensate Collector

Hardware Description

The RAHF Environmental Control System (ECS) is mounted on the back of the cage module to circulate conditioned air through the cages. Air temperature is controlled. Carbon dioxide is removed and oxygen replenished by exchange of air with the Spacelab.

Subsystems

Air Circulation: Two propeller fans pull cabin air from the RAHF cage module and return a portion of the circulating air to the cabin through a filter and a charcoal bed, which removes odors and particulate matter. These two filters bacteriologically isolate the animals and crew and ensure that the RAHF maintains a slightly negative pressure with respect to the cabin. Air within the RAHF is circulated by a cluster of four propeller fans. To ensure containment of free-floating particulates, the Single Pass Auxiliary Fan maintains negative pressure within the RAHF when a cage is removed.

Temperature Control: The RAHF uses a bang-bang type electronic system with a controllable set point to modulate Thermo-electric Units (TEUs) and fans for cooling and electric resistance elements for heating to provide temperature control. Fans direct bypass air through the cold side of a Pelita-type TEU to cool cage module air, which is remixed with circulating air prior to return to the cages. The Spacelab experiment cooling loop provides a heat sink for the TEU. Water condensing on the TEU is guided by a hydrophilic coating and capillary action to the trailing edges of the TEU cooling fans in the aircore. Water, with some air, is sucked from the trailing edge of the aircore and pumped by a water separator into a condensate collector bottle, which is changed out by the crew as required. A thermoswitch located on the inlet water header of the TEU shuts down the TEU in case of loss of Spacelab cooling water flow and subsequent TEU overheating. The air is warmed, as necessary, by a heater located in the main circulation airflow stream.

The RAHF is equipped with its own auxiliary pump, since the Spacelab coolant circulating pump is not on prior to and during launch or during descent. The auxiliary pump is connected to the ECS system to provide cooling during these periods.

Specifications

Dimensions: N/A
Weight: N/A
Power: Varies depending on load between 30 to approx. 300 W
Temperature Range: 20 to 29 °C
Humidity Range: 30% to 70% RH, not directly controlled
Max CO_2 Partial Pressure: 0.2%, not directly controlled
Min O_2 Partial Pressure: 20%, not directly controlled
Cage Air Flow: Average 6.5 CFM

Data Acquisition

Analog: air temperatures, cooling water temperature, relative humidity, fan pressure rise; Discrete: heating, cooling; Pulse-code modulated: water consumption, activity

Related Ground-Based Hardware

None

Hardware Publications

None

Missions Flown 1991-1995

SLS-1/STS-40, SLS-2/STS-58

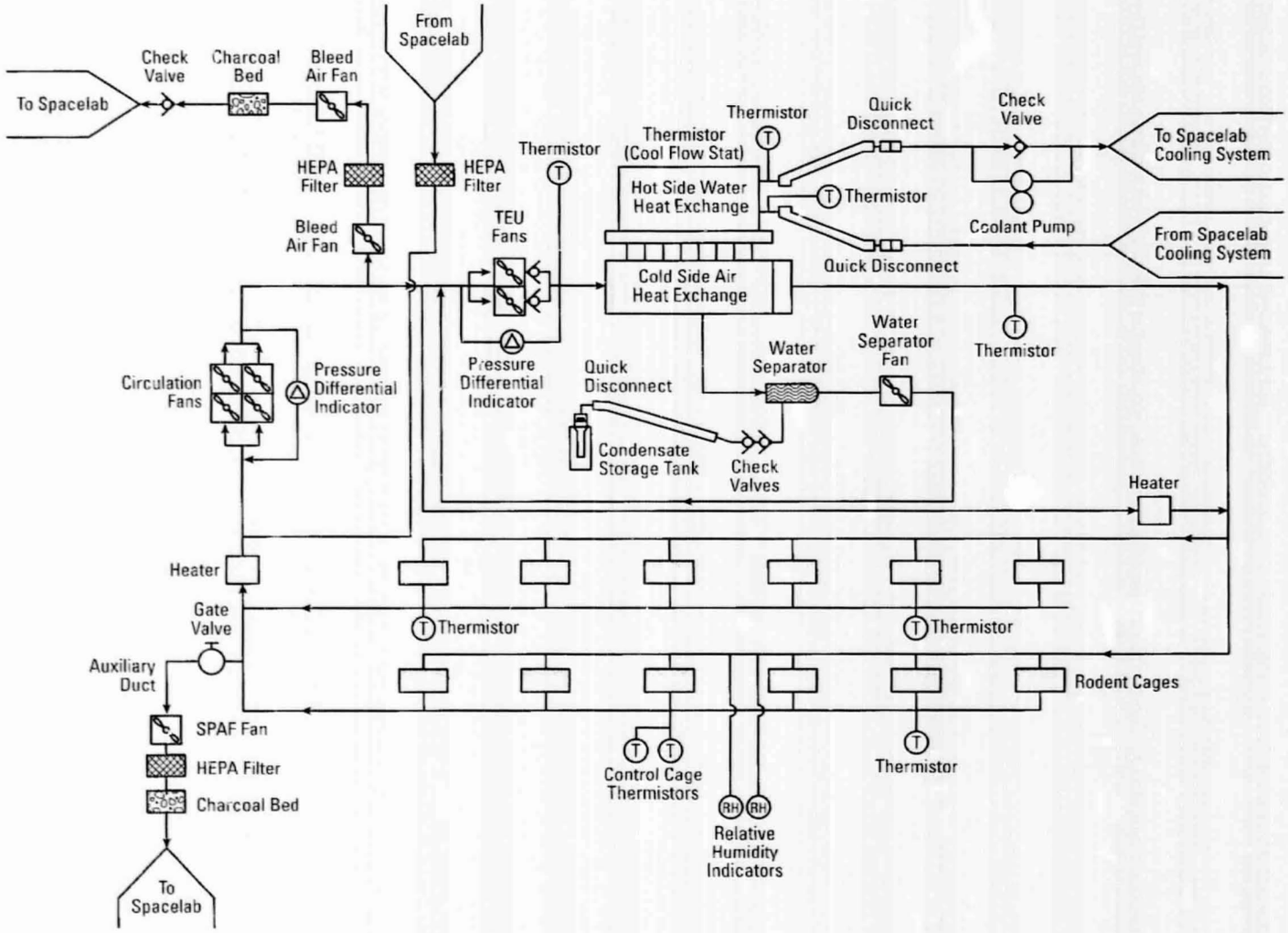
From Spacelab
Check Valve
Charcoal Bed
Bleed Air Fan
To Spacelab
HEPA Filter
HEPA Filter
Bleed Air Fan
Thermistor
Thermistor (Cool Flow Stat)
Thermistor
Quick Disconnect
Check Valve
To Spacelab Cooling System
Hot Side Water Heat Exchange
Thermistor
Coolant Pump
From Spacelab Cooling System
TEU Fans
Quick Disconnect
Cold Side Air Heat Exchange
Thermistor
Water Separator Fan
Water Separator
Circulation Fans
Pressure Differential Indicator
Pressure Differential Indicator
Quick Disconnect
Condensate Storage Tank
Check Valves
Heater
Heater
Gate Valve
Thermistor
Thermistor
Auxiliary Duct
Rodent Cages
SPAF Fan
HEPA Filter
Charcoal Bed
Control Cage Thermistors
Thermistor
Relative Humidity Indicators
To Spacelab

RAHF: Feeding and Waste Management Systems

Hardware Description

Rodent Feeder: Rodent food is supplied *ad libitum* in the form of a rectangular diet bar mounted in the feeder. The bars are advanced into the feeder alcove as one is consumed by the rat. The removable feeder cassette contains two food bars, one servicing the forward cage, the other servicing the back cage. The crew changes the food bars by removing and replacing the feeder cassette without removing the animals or cages. On a scheduled basis, the crew measures food consumption using built-in measurement tapes.

Waste Management: A waste collection tray is attached by slides to the bottom of each cage. For missions longer than 10 days, trays may be changed without removing cages from the cage module. Airflow through the top of the cage directs waste products into the waste trays.

The course grid of the cage floor allows animal debris to pass into the waste tray. Below this grid, a feces tray screen traps feces, and urine is trapped by an absorbent Bondina filter located immediately below the feces tray grid. This filter is treated with phosphoric acid to reduce urine pH, thus inhibiting the production of ammonia from the decomposition of urine. Below the absorbent filter is a fibre pad layer into which is bonded charcoal dust. Below the charcoal pad is a Filtrete layer, formed with polypropylene, that serves as a hydrophobic barrier, followed by a final 150-micron stainless-steel mesh. Feces and urine are also dried by recirculating airflow to inhibit decomposition.

Specifications

Dimensions: 0.9 x 1.187 x 16 inches (foodbar)
Weight: 350 g (foodbar)
Power: N/A

Data Acquisition

Food consumption

Related Ground-Based Hardware

None

Hardware Publications

None

Missions Flown 1991-1995

SLS-1/STS-40, SLS-2/STS-58

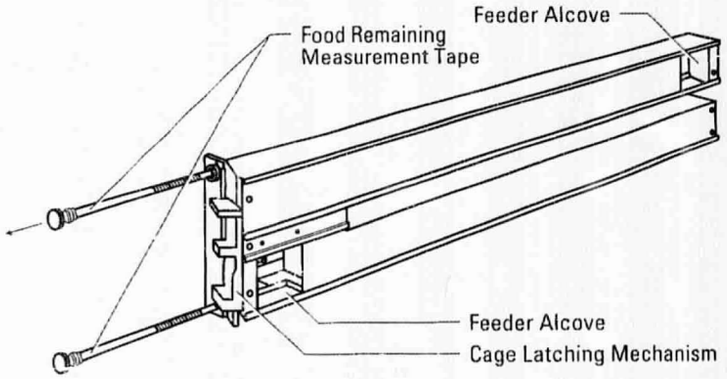

Rodent Cage Feeder Assembly

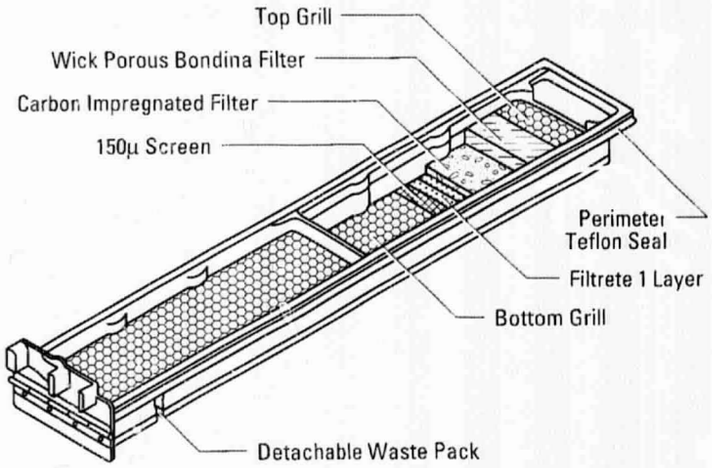

Rodent Cage Waste Tray Filtration

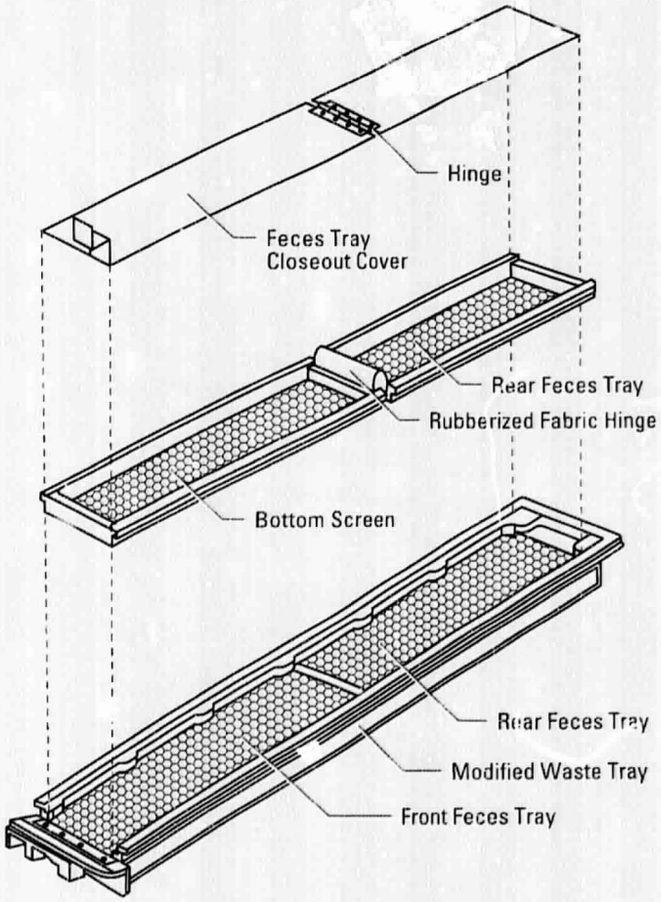

Waste Tray with Closeout Cover

Hardware Description

If necessary, refill water for the Research Animal Holding Facility (RAHF) drinking water system is obtained from the orbiter middeck galley using the Inflight Refill Unit (IRU) for transport to the Spacelab. Excess water is disposed of through the Middeck Waste Collections System. The IRU consists of two major subsystems: the Fluid Pumping Unit and the Collapsible Water Reservoir. A tether for the IRU is provided to meet Shuttle safety requirements.

Subsystems

Fluid Pumping Unit (FPU): The FPU is contained within a Nomex cloth pouch for ease in storage and transport. It is composed of the pump/motor, piping, sensors, and supporting structure required to pump water through the IRU system. The FPU's positive displacement pump contains an integral motor designed for continuous operation. A motor drive control governs pump speed by regulating the motor input voltage. A current limiting device is also provided. Power is not required when filling the system but is required at the RAHF when transferring water to the water tank and when disposing of excess water. Two counters are provided that mechanically indicate the number of liters of water pumped (resettable) and total liters pumped (not resettable).

Collapsible Water Reservoir (CWR): The CWR, also contained within a Nomex cloth, is a flexible, stowable bag, which contains the water for transfer. The main body is constructed of two layers. The inner bladder is made from a polyether polyurethane material compatible with potable water and the outer bladder is made of a Kevlar reinforced urethane to provide pressure holding capability and to provide protection against accidental cuts and tears. A panel of urethane is attached to both sides of the CWR to limit its expanded height. A thermoplastic hose with a quick disconnect mates with the FPU.

Hose/Adapter Accessories: An adapter is provided to enable the dumping of excess water into the orbiter Waste Collection System with a quick disconnect at the IRU end and a twist lock connection to the waste system.

Specifications

Dimensions: 15 x 10 x 12 inches
Weight: 30 lbs dry
Power: 28 VDC: 90 W (only required during RAHF fill)
Pumping Capacity: 1.8 L per minute
Holding Capacity: 6 L, maximum pressure of 20 psi

Data Acquisition

None

Related Ground-Based Hardware

None

Hardware Publications

- Savage, P.D., M.L. Hines, and R. Barnes: *An Inflight Refill Unit for Replenishing Research Animal Drinking Water*. NASA TM-4684, 1995.

Missions Flown 1991-1995

SLS-2/STS-58

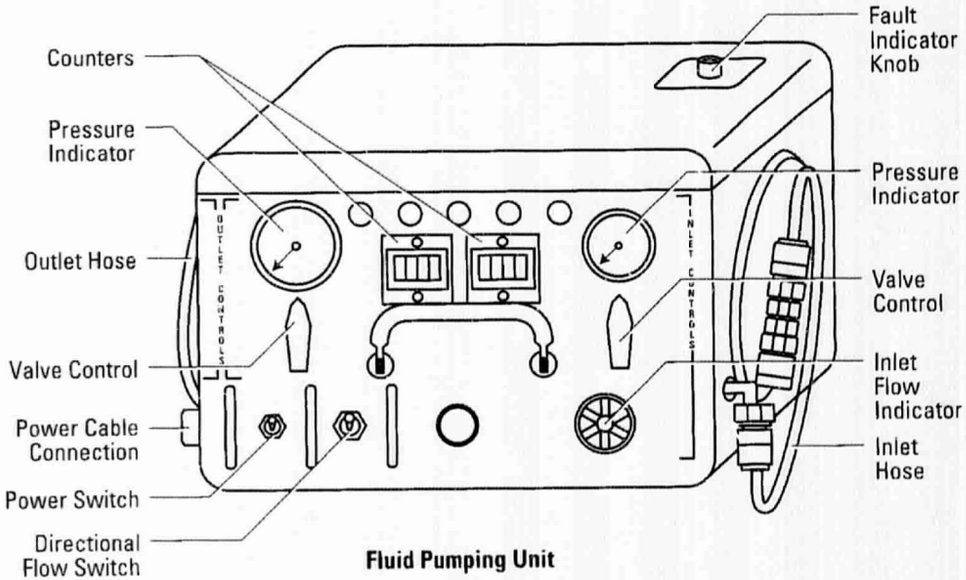

Fluid Pumping Unit

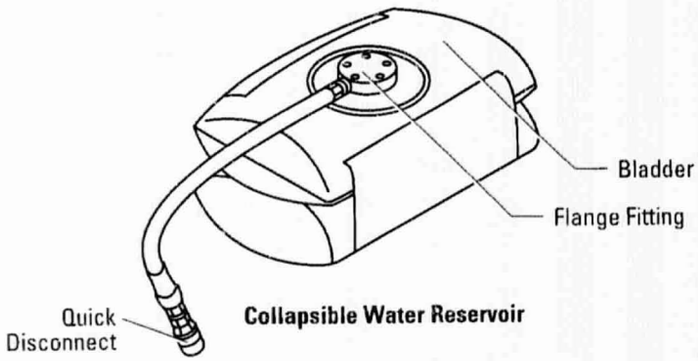

Collapsible Water Reservoir

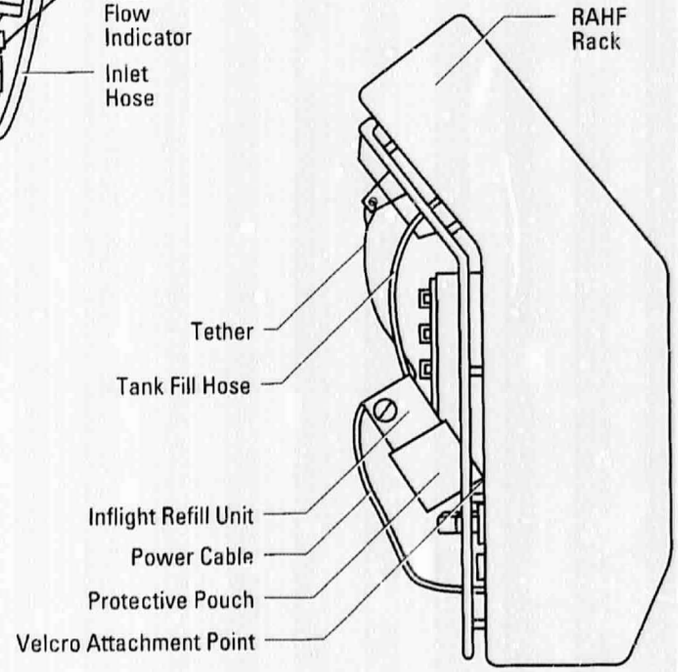

Tethered Configuration

Hardware Description

Each rodent cage houses two rats. Cages are constructed of anodized aluminum side and rear walls, perforated metal floors, and screened-top doors to permit air circulation (top to bottom). Rodent cages are designed with a polycarbonate front window backed with a stainless mesh to keep rodents from rubbing against the window. The cages have a stainless steel mesh partition creating two compartments, one for each rat. Both front and back rats may be viewed by opening a front cover.

Cage tops are hinged to allow access to the animals. Each cage also contains a feeder and a waste tray to contain urine and feces (see separate records). Each rat cage contains activity monitors to record general movement using an infrared light source and sensor. Each time an animal breaks the light beam, a counter automatically advances one count. These signals are recorded and periodically transmitted to the ground to ensure animal well-being.

Specifications

Dimensions: 10.5 x 11.5 x 28 cm/compartment
Weight: 5.63 kg (w/feeder)
Power: Approx 0.1 W/cage for Activity Monitor
Capacity: 2 rodents

Data Acquisition

Activity

Related Ground-Based Hardware

Cage Airflow Checkout Fixture: The system is used to measure air pressure drop across a rodent RAHF cage at a specified airflow rate.

Hardware Publications

- Corbin, B.J., L.A. Baer, R.E. Grindeland, and M. Vasques: Developmental Testing of the Advanced Animal Habitat to Determine Compatibility with Rats and Mice. *Journal of Gravitational Physiology*, vol. 2(1), 1995, pp. P141–P142.

Missions Flown 1991-1995

SLS-1/STS-40, SLS-2/STS-58

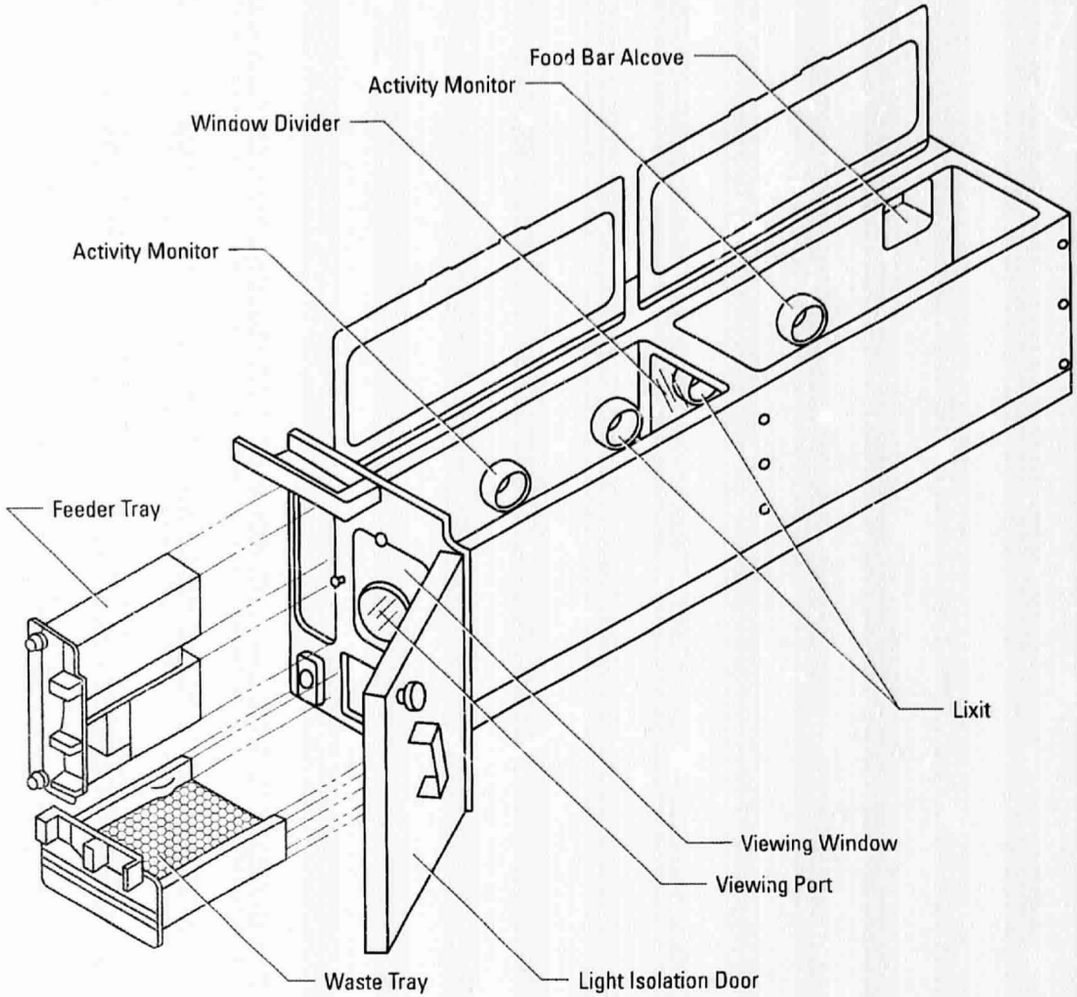
Food Bar Alcove
Activity Monitor
Window Divider
Activity Monitor
Feeder Tray
Lixit
Viewing Window
Viewing Port
Waste Tray
Light Isolation Door

Hardware Description

The RAHF *ad libitum* watering system consists of a pressurized bladder tank, pressure regulator, water delivery system, and water consumption counters. The delivery system includes 24 sets of solenoids, pressure switches, and accumulators that deliver aliquots of water to lixit valves in the cages for the animals.

Subsystems

Self-Pressurized Bladder Tank: A two-camber gas side pressure tank maintains water system pressure and provides the force to move water from the drinking water tank through the system to the cage. As water is used, a flexible diaphragm collapses across the water volume while the gas side expands. The quantity of the water remaining in the tank is monitored via a water pressure transducer.

Pressure Regulator: A pressure regulator maintains downstream water pressure to the drinking water manifold.

Drinking Water Manifold: Water flows in the manifold assembly and via a solenoid into a 0.5-ml accumulator. When consumption reduces accumulator pressure sufficiently, a pressure switch initiates a refill of the accumulator. When water pressure in the accumulator rises sufficiently, a high pressure switch stops water flow until the next consumption-initiated cycle. A count is registered and sent to the data system each time this cycle is carried out. If there is a loss of electrical power or a failure of a solenoid valve or pressure switch, water can be made available to the cage by manually pulling out a small knob on the affected valve. In this mode, water is made available to the cage but no electrical signals indicate water consumption.

Lixit Valves: A lixit provides a "water ball" in the cage, which is replenished as the animal tongues the spigot. Lixits are mounted on a service bar located within the cage side wall.

Version Modifications: For SLS-1, water delivered from the tank was forced through an iodinator, an iodine charged resin bed, to provide nominal iodine levels to ensure water was uncontaminated. An additional valve was added in order to bypass the pressure regulator in the event of a malfunction. Also, a valve was added for drain and fill operations.

For SLS-2, the iodinator was removed due to drying and flaking of the bed and subsequent contamination of the water. In this case, iodine is manually added to the drinking water before being pumped into the water tank.

Specifications

Dimensions: N/A
Weight: N/A
Power: Approx 12 W/activated solenoid plus portion of data system power
Water Capacity: 9.5 l

Data Acquisition

Water consumption

Related Ground-Based Hardware

Fill and Bleed Cart: The cart is used to fill, drain, and dry, and bleed air from the RAHF drinking water system on the ground prior to use of the system.

Hardware Publications

- Dalton, B.P., G. Jahns, J. Meylor, N. Hawes, T.N. Fast, and G. Zarow: *Spacelab Life Sciences-1 Final Report.* NASA TM-4706, August 1995.

Missions Flown 1991-1995

SLS-1/STS-40, SLS-2/STS-58

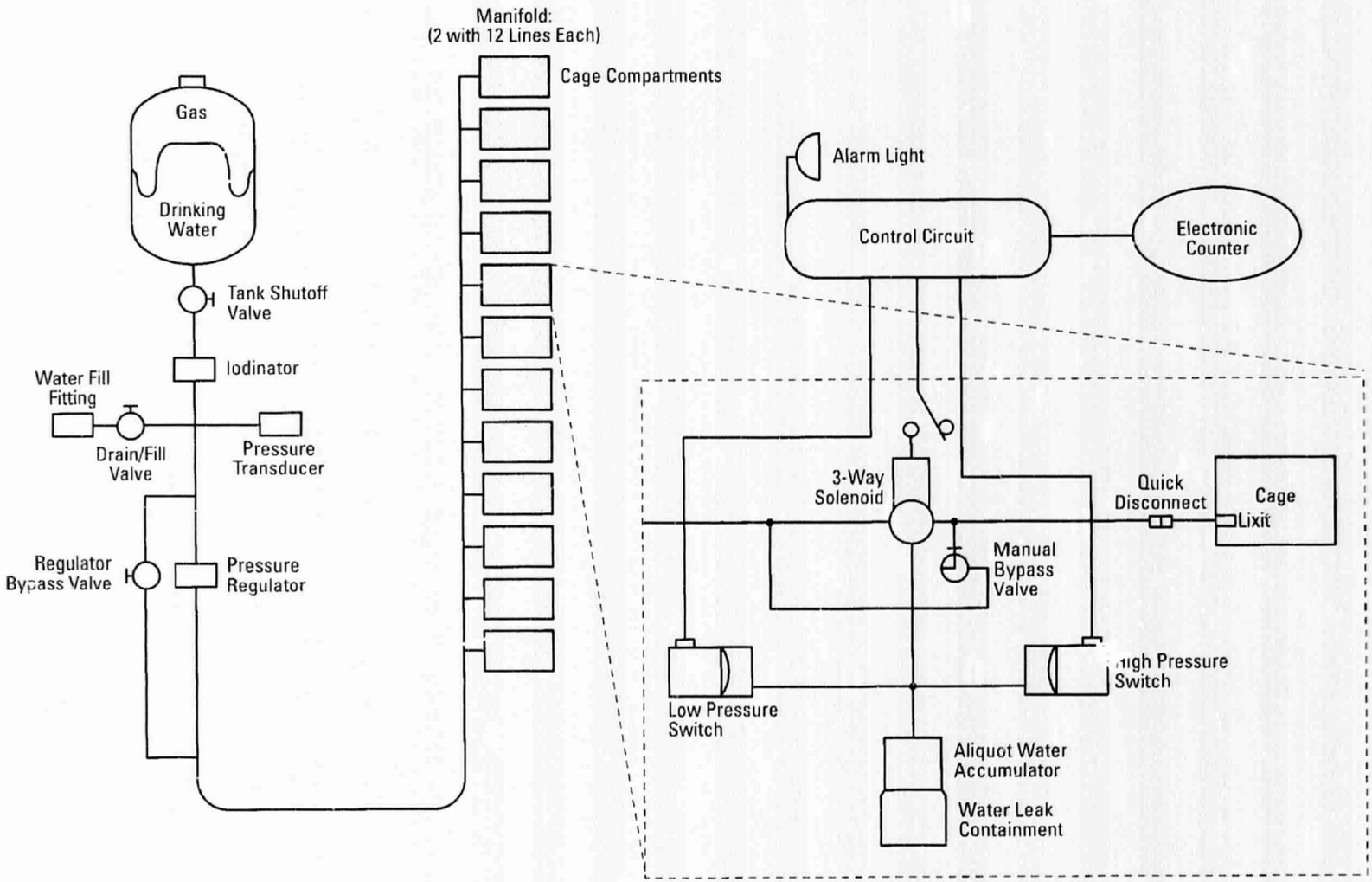

Everything within This Box Repeated Once for Each Cage Compartment

Hardware Description

The Small Mass Measurement Instrument (SMMI) is designed to measure the weight of biological samples and small specimens from 1 to 10000 g in a microgravity environment. It can be integrated into a standard Spacelab single rack or on one side of a double rack. The SMMI determines the weight of a specimen through the use of its mass properties, thereby minimizing the influence of any gravity field.

Mass measurements can be obtained when the specimen is placed on the tray assembly and restrained with the perforated rubber cover to minimize relative motion. The measurement process begins with the semi-automatic release of the specimen and tray assembly from an offset position, so that they oscillate mechanically. A set of plate fulcra springs support the tray assembly and provide the oscillatory forces for motion. The zero crossover detection assembly precisely measures the period of oscillation, which is a function of the mass of the tray assembly, specimen, and part of the plate fulcra springs. The measurement process ends with the semi-automatic recapture of the specimen and tray assembly and return to its original offset position. The SMMI controller then calculates and displays a mass value for the specimen. A set of 12 stackable calibration weights are provided with each instrument.

In addition to the calibration and measurement modes, multiple non-standard diagnostic functions are available, such as inspection of calibration values stored in memory, inspection of equations used to calculate the specimen weight, testing of the oscillation function of the tray assembly, and an option to display period-of-oscillation measurements in seconds.

Specifications

Dimensions: 31 x 48 x 46 cm
Weight: 17 kg
Calibration Masses: 1.3 kg
Power: 15 W
Range/Accuracy: 25 g – 2 kg ± 0.5 g
2–10 kg ± 5 g

Data Acquisition

Mass of Specimen

Related Ground-Based Hardware

None

Hardware Publications

- Dalton, B.P., G. Jahns, J. Meylor, N. Hawes, T.N. Fast, and G. Zarow: *Spacelab Life Sciences-1 Final Report.* NASA TM-4706, August 1995.
- *Life Sciences Laboratory Equipment (LSLE) On-line Catalog.* NASA, 1998. http://lifesci.arc.nasa.gov:100/lsle/.

Missions Flown 1991-1995

SLS-1/STS-40, SLS-2/STS-58

Small Mass Measuring Instrument (SMMI)

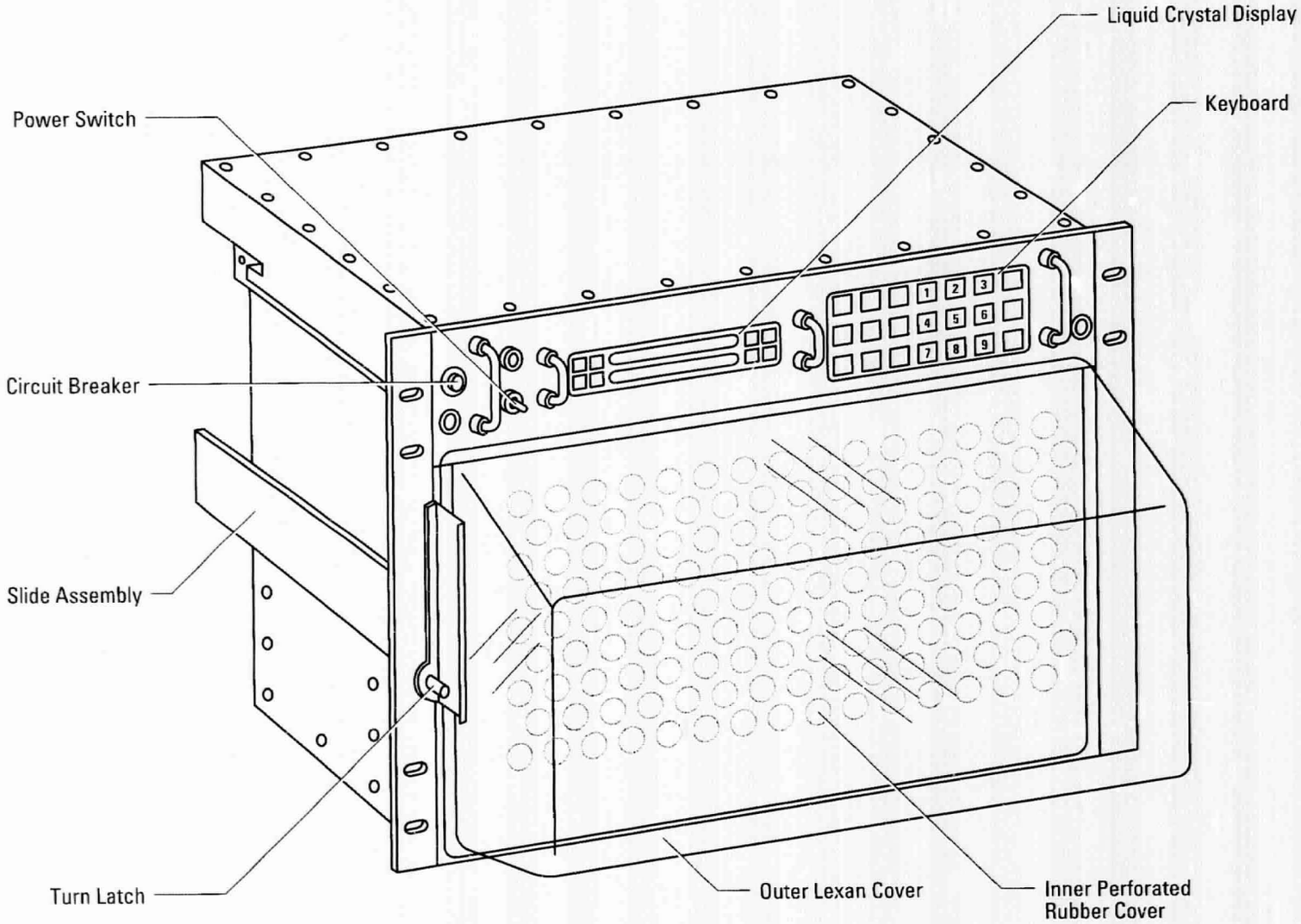

Hardware Description

The Space Tissue Loss-A (STL-A) Module, currently renamed the Cell Culture Module (CCM), is a completely automated cell culture facility designed specifically to aid in the study of microgravity effects at the cellular and embryonic levels. The entire hardware unit fits inside a Shuttle middeck locker. The system offers a variety of biological sample maintenance systems, variable temperature settings, options for media delivery and collection of conditioned media samples, and programmed additions of drugs, hormones, radioactive labels, and other experiment requirements.

Subsystems

Biological Samples: The STL-A has space for four separate experiments, each housed in a separate module, or Bioreactor Rail Assembly. The rails hold a variable number of bioreactor cartridges, which are inlaid with hollow fibers to provide an exchange surface for nutrient media, gas, and the removal of waste products. Hollow fiber bioreactors allow for culture growth in three dimensions. Fiberless cartridges are also available for culturing larger pieces of tissue.

Incubation/Refrigeration: The unit can be programmed to maintain a constant temperature or be adjusted during orbit. Temperature regulation from 10 to 40 °C is available.

Media Delivery: Nutrients and gas are provided to the growing cells via a closed-loop flowpath. The one-way flow of liquid has two different nutrient delivery options. The recirculating flow path option directs media flow through the media bag, oxygenator, pump, biochamber, and back to the media bag, allowing growth factors and other products to accumulate. An intermittent feed option periodically pumps fresh media into a short-flow path that recirculates in the same manner as the first option, but the media is eventually diverted to a sump and replaced with fresh media.

Injections: The injection system can be used to add drugs, hormones, fixatives, and chemical labels to the media.

Sampling: The STL-A allows for automated collection of media samples, which can be paired with the injection system.

Specifications

Dimensions: Occupies 1 middeck locker
Weight: 57 lbs control
Power: 100 W
Temperature: standard 37 °C and a separate 4 °C reagent or sample cooling chamber
Cartridge Capacity: 24 Bioreactor cartridges (standard)

Data Acquisition

Event execution log, pressure, temperature, and acceleration

Related Ground-Based Hardware

PI Laboratory Trainer: The trainer is a fully functional nonflight version of the STL-A, used as a training and demonstration unit.

Hardware Publications

- *Life Sciences Laboratory Equipment (LSLE) On-line Catalog.* NASA, 1998. http://lifesci.arc.nasa.gov:100/lsle/.

Missions Flown 1991-1995

NIH.C1/STS-59, NIH.C2/STS-66, NIH.C3/STS-63, NIH.C4/STS-69

Space Tissue Loss-A (STL-A) Module

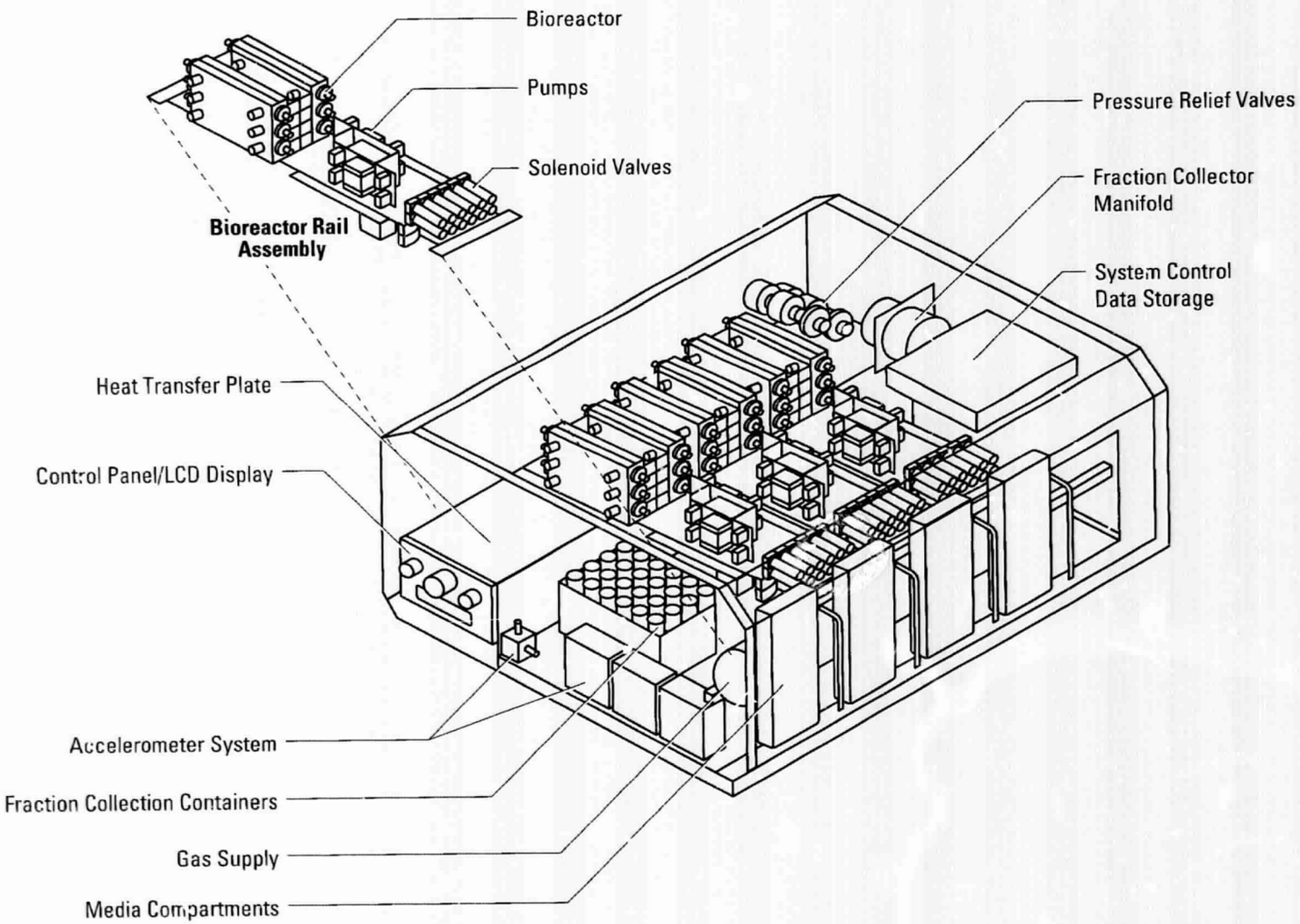

Page intentionally left blank

A

AAEU *see* Aquatic Animal Experiment Unit
Acheta domesticus see cricket (*Acheta domesticus*) experiments
activity sensors, 21
adrenal gland, stressogenic effect of microgravity, 396
Advanced Animal Habitat, 208
AEM *see* Animal Enclosure Module
AES *see* Atmospheric Exchange System
AFS-2 *see* Autogenic Feedback System-2
Agar Tube/Horticultural Foam system, 45, 46
Altered Kit Container (AKC), 100, 101, 342
Ambient Temperature Recorder (ATR-4)
  missions flown, 464
    BRIC-03, 170, 171
    IML-1, 85, 88, 130, 131
    IML-2, 94, 134, 135, 290
    IMMUNE.1, 293
    IMMUNE.2, 294
    IMMUNE.3, 217
    LMS, 220
    NIH.R1, 154, 155, 314–326
    NIH.R2, 159, 160, 327–332
    NIH.R4, 223
    PARE.01, 72, 73, 333
    PARE.02, 76, 77, 334–339
    PARE.03, 79, 80, 340, 341
    PHCF-1, 100, 342
    PSE.02, 117, 118, 343, 344
    PSE.03, 120, 121, 345, 346
    PSE.04, 124, 125, 347, 348
    SLJ-1, 107, 111, 349
    SLS-1, 55, 58, 352–359, 362–381, 383, 384
  overview, 464
  schematic, 465
  specifications, 464
Ames Research Center (ARC), 5–6
  Data Archive Project, 61
  life sciences programs at, 25–27
  research studies, 2, 5–6
  Space Life Sciences Web site, 15
amphibian experiments *see* frog experiments
Animal Enclosure Module (AEM)
  missions flown, 466
    IMMUNE.1, 130, 131, 293
    IMMUNE.2, 134, 135, 294
    IMMUNE.3, 217
    LMS, 220
    Neurolab, 231–232
    NIH.R1, 154, 155, 314–326
    NIH.R2, 159, 160, 327–332
    NIH.R3, 213
    NIH.R4, 223
    PARE.01, 72, 73, 333
    PARE.02, 76, 77, 334–339
    PARE.03, 79, 80, 340, 341
    PSE.02, 117, 118, 343, 344
    PSE.03, 120, 121, 345, 346
    PSE.04, 124, 125, 347, 348
    SLS-1, 55, 58, 352–355, 357–359, 362–381, 383, 384
  overview, 71, 466
  schematic, 467
  specifications, 466
Animal Enclosure Module (AEM) Nursing Facility, 213
Animal Enclosure Module (AEM) Water Refill Box, 466, 468–469
  missions flown, 468
    NIH.R1, 154, 155
    NIH.R2, 159, 160
    PARE.01, 72
    PARE.02, 76
    PARE.03, 79
    PSE.02, 117, 119
    SLS-1, 55
  overview, 466, 468
  schematic, 469
  specifications, 468
animal subjects, choosing, 17–19
ANP *see* atrial natriuretic peptide
Aquatic Animal Experiment Unit (AAEU), 83, 94, 95–96, 97
Aquatic Research Facility (ARF) (hardware), 204, 215
Aquatic Research Facility 1 (ARF-01), 27, 215
Arabidopsis thaliana see mouse-ear cress (*Arabidopsis thaliana*) experiments
ARC *see* Ames Research Center
Area Passive Dosimeter (APD), 239, 241, 243, 248, 250
ARF *see* Aquatic Research Facility
ARF-01 *see* Aquatic Research Facility 1
ASI (Italian space agency), 12
Asynchronous control group, 22
Atlantis orbiter, 30, 142, 154, 187
Atmospheric Exchange System (AES)
  missions flown
    CHROMEX-01, 34, 35, 264
    CHROMEX-02, 38, 39, 265
    CHROMEX-05, 48, 49, 270
    CHROMEX-06, 271
    LMS, 220
  overview, 512–515
  schematic, 515
  specifications, 514
ATR-4 *see* Ambient Temperature Recorder
atrial natriuretic peptide (ANP), 53–63, 357, 381, 382, 390
Aurelia aurita see jellyfish (*Aurelia aurita*) experiments
Autogenic feedback, 108, 350
Autogenic Feedback System-2 (AFS-2)
  missions flown, 470
    Spacelab-J, 107, 109, 111, 350
  overview, 470
  schematic, 471
  specifications, 470
Avena sativa see oat (*Avena sativa*) experiments
Avian Development Facility, 204

B

bacterium (*Burkholderia cepacia*) experiments, 27, 224

behavior and performance experiments, monkey, 252
Biological Research in Canisters (BRIC) payloads, 163–179
BRIC-01, 26, 48, 164–166, 257, 258, 411, 417
BRIC-02, 26, 167–169, 233, 259, 417
BRIC-03, 26, 50, 134, 146, 170–171, 173, 260, 417–418
BRIC-04, 26, 159, 174–177, 261, 418
BRIC-05, 26, 159, 174–177, 262, 418
BRIC-06, 26, 149, 178–179, 263, 419
BRIC-07, 27, 216
BRIC-08, 27, 219
BRIC-09, 27, 221
BRIC-10, 27, 226
BRIC-13, 27, 233
BRIC-Mir, 27, 184, 244
BRIC-PEG/C, 27, 234
history, 89
biomass generation, mouse-ear cress, 44–47
Biomass Production System, 204
Biomphalaria glabrata see snail (*Biomphalaria glabrata*) experiments
Bion program, 251
see also Cosmos biosatellite program
Bion 10, 9, 14, 26, 193, 196–199, 201–202
Bion 11, 9, 11, 14, 27, 53, 205, 252
Biopack, 204
Biorack US Experiment hardware
Biorack US 1, 85, 476–477
Biorack US 2, 85, 478–479
Biorack US 3, 85, 480–483
European Space Agency, 11, 83, 88, 93, 203
missions flown, IML-2, 290, 476
syringe rack, 482–483
Bioreactor, 209
biosampling, 21–22
biosatellites, unmanned, 205
biosensors, 21
BioServe Space Technologies, IMMUNE payloads, 129, 130, 134
biospecimen sharing, 54, 61, 64
Biotest Reuter Centrifugal Sampler (RCS), 55, 58
black-bodied beetle (*Trigonoscelis gigas*) experiments, 27, 245
blood volume experiment, 362, 393
bone and calcium physiology experiments
bone growth, 53–63, 117–119, 196–199, 201–202, 340, 344, 353, 388
bone loss, 220, 343, 348
bone mass, 117, 196–199, 201–202, 220, 273, 385
bone metabolism, 350
bone morphogenetic protein (BMP), 347, 355
bone strength, 53–63, 196–199, 201–202, 274, 352
calcium, 65, 196–199, 201–202, 218, 274, 354
cartilage, 85–88, 90–93, 120–121, 142, 145, 285
CELLS experiment, 85–88, 90–93, 285
collagen, 345
estrogen and, 348
experimental subjects
chicken cells, 138–143, 145 146–148, 212, 218, 235, 305, 310
chicken embryo, 307
medaka embryo, 220
human cells, 214, 222, 224, 225, 313
mouse, 85–88, 90–93, 214, 224, 225, 285
monkey, 196–199, 201–202, 252, 272–274
rat cells, 138–141, 146–151, 222, 304, 309
rat, 55–60, 62–63, 64–66, 68–69, 76–78, 117–127, 154–162, 220, 312, 314, 315, 327, 334, 340, 341, 343–348, 352–355, 385–389
fetal development, 315
gene expression, 225
immune system and, 124–125
loading and, 340, 346, 352
mineralization, 65, 142–143, 159–162, 196–199, 201–202, 272, 307, 327, 334, 352, 354, 387, 388
muscle-bone junction, 154–155, 314
osteoblast, 13–14, 76–81, 138–141, 146–151, 222, 224, 304, 305, 309, 310, 312, 313, 334, 341, 348, 389
osteoclast, 334, 348
osteogenesis, 53–63, 355
osteopenia, 341
recovery after space flight, 385, 386, 388, 389
skeletal development, 76–81, 154–155, 315, 334, 340
transforming growth factor-β (TGF-β), 149–151, 222, 313, 346
tibia, 196–199, 201–202, 272, 386, 388
tissue repair, 120–123, 345, 346
bone morphogenetic protein (BMP), 347, 355
Botany Experiment (BOTEX) Incubator, 231–232
brain *see under* neurophysiology experiments
Brassica rapa see mustard (*Brassica rapa*) experiments
Brazil, 205–206
BRIC *see* Biological Research in Canisters payloads
BRIC-60 canisters
missions flown, 474
BRIC-01, 164, 165, 257, 258
BRIC-03, 170, 171, 260
BRIC-06, 178, 179, 263
BRIC-09, 221
BRIC-10, 226
BRIC-PEG/C, 234
overview, 474
schematic, 475
specifications, 474
BRIC-100 canisters
missions flown
BRIC-02, 167, 168, 259
BRIC-04, 174, 175, 261
BRIC-05, 174, 175, 262
BRIC-07, 216
BRIC-08, 219
BRIC-13, 233
overview, 472
schematic, 473
specifications, 472
BRIC-Passive Cooler, 233
BRIC-VC canisters, 244
Burkholderia cepacia see bacterium (*Burkholderia cepacia*) experiments

C

Caenorhabditis elegans see nematode (*Caenorhabditis elegans*) experiments
calcium physiology experiments *see* bone and calcium physiology experiments
Canada
ARF-01, 215
BRIC-08, 219
BRIC-10, 226
IML-1, 85
IML-2, 94
IMMUNE.3, 217
ISS program, 9, 10, 205, 206
LMS, 220
SLS-1, 10
Canadian Space Agency (CSA), 9–10, 14, 94, 208
cardiovascular physiology experiments
atrial natriuretic peptide, 53–63, 357, 381, 390
natriuretic peptide development, 154–155, 159–162, 325, 328
rat, 64–66, 68–69, 159–162, 223, 328, 390
carrot (*Daucus carota*) cell experiments, 26
Spacelab-J, 107–109, 111–114, 351
catecholamines, in rat brain, 381
CCK *see* Life Science Cell Culture Kit
CCM-A *see* Cell Culture Module-A
CEBAS *see* Closed Equilibrated Biological Aquatic System
Cell Culture Chamber, 107, 111, 292, 351
cell culture experiments, 26–27
Cell Culture Module-A (CCM-A), 222, 235
Cell Culture Unit, 204, 208
cell division
daylily and *Haplopappas*, 34–37, 38–40, 264, 265
Super-Dwarf wheat, 44–47
cell and molecular biology experiments
experimental subjects
human cells, 214, 224, 225
mouse, 85–88, 90–93, 214, 224, 225
nematode cells, 214
payloads
BRIC-06, 178–179, 263
IML-1, 85–88, 90–93, 286
signal transduction, 178–179, 263
CELLS experiment, 85, 86, 87, 88, 90, 91
Centre National d'Etudes Spatiales (CNES), 11, 53, 94, 205
Centrifuge Accommodation Module (CAM) (International Space Station), 10, 13, 206
Ceratophyllum derersum see hornweed (*Ceratophyllum derersum*) experiments
chicken (*Gallus gallus*) cell experiments, 26, 27
NIH.C1, 138–141, 305
NIH.C2, 142–143, 145, 307–308
NIH.C3, 146–148, 310
NIH.C5, 212
NIH.C7, 218
NIH.C8, 235
Chiron Corp., IMMUNE payloads, 129, 130, 134, 217, 293, 294
choroid plexus, experiments, 154–155, 325, 406
CHROMEX payloads, 33
CHROMEX-01, 33, 34–37, 264, 419
CHROMEX-02, 33, 38–40, 265, 420
CHROMEX-03, 26, 41–43, 266, 420
CHROMEX-04, 26, 44–47, 267–269, 420–421
CHROMEX-05, 26, 48–49, 164, 270, 421–422
CHROMEX-06, 26, 50–51, 134, 146, 170, 271, 422
chromosome morphology
daylily and *Haplopappas*, 34–37, 38–40, 264, 265, 267
mouse-ear cress, 44
Super-Dwarf wheat, 44–47
chronobiology experiments
circadian rhythm, 196–199, 201–202, 275
circadian timing system, 159–162, 329
experimental subjects
black-bodied beetle, 245
monkey, 196–199, 201–202, 252, 275
rat, 159–162, 329
temperature regulation, 196–199, 201–202, 275
Circadian Periodicity Experiment (CPE) Package, 323
circadian rhythm, 27, 184, 245, 275, 323, 329
Closed Equilibrated Biological Aquatic System (CEBAS), 27, 229, 232
CNES *see* Centre National d'Etudes Spatiales
Collaborative Ukranian Experiment (CUE), 14, 27, 227–228
Columbia orbiter, 30, 55, 64, 94, 117, 124
Commercial Space Center (CSC) (NASA), 9, 29
control groups, 22, 24
Cosmos biosatellite program, 22, 193, 195, 203
biosatellite interior, schematic, 194
Cosmos 1514, 153, 156
Cosmos 2229, 9, 14, 26, 193, 196–199, 201–202
experiments, 196–199, 201–202, 272–283
payloads, 195, 197–199
publications, 202, 422–426
hardware
neuromuscular, 484, 488–489
neurovestibular, 484, 490–491
overview, 484–485
temperature, 484, 486–487
overview, 196
Coturnix coturnix see Japanese quail (*Coturnix coturnix*) egg experiments
CPE *see* Circadian Periodicity Experiment (CPE) Package
cricket (*Acheta domesticus*) experiments, 27, 232
CSA *see* Canadian Space Agency
cucumber (*Cucumis sativus*) experiments, 27, 234
CUE *see* Collaborative Ukranian Experiment
cultured cells, engineering challenges, 20
Cynopus pyrrhogaster see newt (*Cynopus pyrrhogaster*) experiments

D

Dactylis glomerata see orchardgrass (*Dactylis glomerata*) experiments
DARA *see* DLR
Daucus carota (carrot) cell experiments, 26
SL-J, 107–109, 111–114, 351
daylily (*Hemerocallis*) cell experiments, 26, 27

BRIC-05, 174–177, 262, 418
BRIC-08, 219
BRIC-Mir, 244
CHROMEX-01, 34–37, 264
CHROMEX-02, 38–40, 265
IML-2, 94–98, 292, 431–434
SL-J, 107–109, 111–114, 351
Delayed Flight Profile Test (DFPT), 62
Delayed synchronous control group, 22
developmental biology experiments
afferent innervation, 187–192, 298
blood vessel formation, 187–199, 301
bone development, 159–162, 327
contractile protein isoforms, 187–192, 295
corneal ultrastructure in quail, 187–192, 296, 297
developmental abnormalities, 154–155, 319
diapause cycle in gypsy moth, 257
egg development, 108–109, 349
embryo, 53–63, 187–192, 300, 356
epidermal development, 154–155, 318
experimental subjects
medaka embryo, 220
frog, 26, 107–109, 111–114, 349, 494–495
gypsy moth, 164–166, 257
jellyfish, 94–98, 290, 356
newt, 94–98
quail egg, 26, 27, 186, 187, 238, 295–303
rat, 55–60, 62–63, 154–162, 220, 316–319, 330
sea urchin egg and embryo, 215
soybean, 164–166
tobacco hornworm, 174–177, 216, 261
fecundity, 187–192, 303
mammalian development, 154–155, 159–162, 317, 330
metamorphosis, 94–98, 174–177, 261, 299
optic nerve development, 154–155, 326
placental development, 154–155, 316
skeletal development, 187–192, 297
vestibular development, 154–155, 187–192, 299, 324
visuo-vestibular system, 187–192, 302
DFPT see Delayed Flight Profile Test
Discovery orbiter, 30, 44, 72, 79, 85, 130, 134, 146, 159, 167, 170, 174, 181
dissecting microscope, 492–493
DLR (German space agency), 11–12, 94, 96
Douglas fir (*Pseudotsuga menziesii*) experiments, 27, 220

E

Edwards Air Force Base, Space Shuttle program, 30
electrolyte physiology experiments *see* renal, fluid, and electrolyte physiology experiments
embryo *see* developmental biology experiments
Endeavour orbiter, 30, 41, 48, 76, 107, 120, 138, 149, 164, 178
endocrinology experiments
adenohypophysis morphology, 76–78, 335
atrial natriuretic factor, 53–63, 357, 381
experimental subjects
monkey, 196–199, 201–202, 276
rat, 55–60, 62–63, 64–66, 68–69, 76–78, 100–103, 335, 342, 357–359, 391, 392
hormone, 99–103, 196–199, 201–202, 276, 342, 358
growth hormone, 276, 342, 358, 375
insulin-like growth factor (IGF-1), 276
pancreas exocrine function, 359
pituitary somatotroph, 391
thyroid gland, 392
Environmental Radiation Measurements on Mir Station 1, 27, 184, 239
Environmental Radiation Measurements on Mir Station 2, 27, 184, 241
Environmental Radiation Measurements on Mir Station 3, 27, 184, 243
Environmental Radiation Measurements on Mir Station 4, 27, 184, 248
Environmental Radiation Measurements on Mir Station 5, 27, 184, 250
erythropoiesis experiments, 363, 394
ESA *see* European Space Agency
ethics, of animal use in space life sciences research, 23
European Launcher Development Organization, 10
European Space Agency (ESA), 10–11, 232
Biobox facility, 197
Biopack, 204
Biorack, 11, 83, 88, 93, 203, 214, 224, 225
Columbus orbital Facility, 11, 206
Microgravity Database Web site, 15
European Space Research Organization, 10

F

FEU *see* Frog Environmental Unit
FOTRAN *see* Phototropic Transients (FOTRAN) experiment
France
BRIC-08, 219
Centre National d'Etudes Spatiales (CNES), 11, 53, 94, 205
IML-1, 85
LMS, 220
Neurolab, 232
Frog Embryology Experiment, 108–109
Frog Environmental Unit (FEU), 107, 111, 349, 494–495
frog (*Xenopus laevis*) experiments, 26
frog egg experiments, 26, 349
Spacelab-J, 107–109, 111–114, 349, 446–448

G

Gallus gallus see chicken (*Gallus gallus*) cell experiments
Gas Exchange Measurement System (GEMS), 240, 246, 496–497
Gas Sampling Kit, CHROMEX-02, 38, 265
gastric hypersecretory syndrome, 366
GEMS *see* Gas Exchange Measurement System
General Purpose Transfer Unit (GPTU)
missions flown
SLS-1, 55, 56, 57, 360
SLS-2, 64, 65
overview, 498
schematic, 499
specifications, 498

General Purpose Work Station (GPWS)
missions flown
SLJ-1, 107, 111, 349
SLS-1, 55, 56, 57, 360
SLS-2, 64, 65
overview, 500
schematic, 501
specifications, 500
Genetics Institute, PSE.04, 125, 126
Germany, 11–12
BRIC-10, 226
CEBAS, 229
IML-2, 94, 96
IML program, 83
Neurolab, 232
glovebox apparatus, 19, 206
Glycine max see soybean (*Glycine max*) experiments
GN_2 Freezer, 170, 171, 178, 179, 226, 263
GPPF *see* Gravitational Plant Physiology Facility
GPTU *see* General Purpose Transfer Unit
GPWS *see* General Purpose Work Station
Grateful Med (Web site), 415
Gravitational Biology Facility, 206, 208
Gravitational Plant Physiology Facility (GPPF)
IML-1, 85, 87, 287, 288
overview, 502
schematic, 503
Gravitational Threshold (GTHRES) experiment, 85, 86, 87, 90, 91, 92, 287
gravity receptors, 94–98, 291, 380, 410
gravity-sensing mechanism, 19, 55, 94
Greenhouse 1
experiments, 186, 187–192, 205, 284
overview, 26, 184, 185
publications, 426–427
Greenhouse 2, 27, 184, 240
Greenhouse 3, 184, 246
ground-based experiments, 8
group-housed animals, 21
growth hormone, 276, 342, 358, 375
GTHRES *see* Gravitational Threshold (GTHRES) experiment
gypsy moth (*Lymantria dispar*) experiments, 26, 164–166, 257

H

habitats, 20–21
Haplopappus gracilis experiments
CHROMEX-01, 34–37, 264
CHROMEX-02, 38–40, 265
hardware, 463–533
Ambient Temperature Recorder (ATR-4), 464–465
Animal Enclosure Module (AEM), 466–467
Animal Enclosure Module (AEM) Water Refill Box, 468–469
Aquatic Research Facility (ARF), 204, 215
Atmospheric Exchange System (AES), 512–515
Autogenic Feedback System-2 (AFS-2), 470–471
Biological Research in Canisters (BRIC) payloads, 163
BRIC-01, 164, 165, 257, 258, 411
BRIC-02, 167, 168, 259
BRIC-03, 170, 171, 260
BRIC-04, 174, 175, 261
BRIC-05, 174, 175, 262
BRIC-06, 178, 179, 263
BRIC-08, 219
BRIC-09, 221
BRIC-10, 226
BRIC-13, 233
BRIC-PEG/C, 234
Biorack US Experiment hardware,
Biorack US 1, 476–477
Biorack US 2, 478–479
Biorack US 3, 480–483
BRIC-60 canisters, 474–475
BRIC-100 canisters, 472–473
CEBAS, 229
CHROMEX payloads
CHROMEX-01, 34, 35, 264
CHROMEX-02, 38, 39, 265
CHROMEX-03, 41, 42, 266
CHROMEX-04, 44, 45, 267–269
CHROMEX-05, 48, 49, 270
CHROMEX-06, 50, 51, 271
Cosmos 2229, 196, 197–198, 275, 280, 282, 484–491
described, 463–533
dissecting microscope, 492–493
Frog Environmental Unit (FEU), 494–495
Gas Exchange Measurement System (GEMS), 496–497
General Purpose Transfer Unit (GPTU), 498–499
General Purpose Work Station (GPWS), 500–501
Gravitational Plant Physiology Facility (GPPF), 502–503
IMMUNE payloads
IMMUNE.1, 130, 131, 293
IMMUNE.2, 134, 135, 294
IMMUNE.3, 217
International Microgravity Laboratory (IML) payloads
IML-1, 85, 87–88, 90, 285–289
IML-2, 94, 95, 290–292
Jellyfish Kits and Kit Containers, 506–507
Life and Microgravity Spacelab (LMS) payload, 220
Microgravity Plant Nutrient Experiment (MPNE) payload, 230
Middeck Ambient Stowage Insesrt (MASI), 504–505
NASA/Mir payloads, 186, 187, 190, 237–250, 284, 295–303
NASA/Mir kits, 508–509
National Institutes of Health Cells (NIH.C) payloads
NIH.C1, 138, 139, 304–306
NIH.C2, 142, 143, 307, 308
NIH.C3, 146, 147, 309–311
NIH.C4, 149, 151, 312
NIH.C5, 212
NIH.C6, 222
NIH.C7, 218
NIH.C8, 235
National Institutes of Health Rodents (NIH.R) payloads
NIH.R1, 154, 155, 314–326

NIH.R2, 159–160, 327–332
NIH.R3, 213
NIH.R4, 223
Neurolab, 232
Olympus 802 camcorder, 510–511
Pituitary Hormone Cell Function (PHCF) payload 100, 101, 342
Physiological and Anatomical Rodent Experiment (PARE) payloads
PARE.01, 72, 73, 333
PARE.02, 76, 77, 334–339
PARE.03, 79, 80, 340, 341
Physiological Systems Experiment (PSE) payloads
PSE.02, 117, 118, 343, 344
PSE.03, 120, 121, 345, 346
PSE.04, 124, 125, 347, 348
Plant Carry-On Container (PCOC), 504–505
Plant Growth Unit (PGU), 512–513
Refrigerator/Incubator Module (R/IM), 516–517
Research Animal Holding Facility (RAHF), 518–529
Small Mass Measuring Instrument (SMMI), 530–531
Spacelab-J (SL-J), 107, 109, 111, 349–351
Spacelab Life Sciences (SLS) Payloads, 54
SLS-1, 55, 56, 57–59, 62, 352–384
SLS-2, 64, 65, 385–410, 412
Space Shuttle program, 29
Space Tissue Loss-A (STL-A) Module, 532–533
Vestibular Function Experiment Unit (VFEU), 236
hardware verification experiments, 55–60, 62–63, 213
Particulate Containment Demonstration Test (PCDT), 56, 57, 360
Small Mass Measuring Instrument (SMMI), 361, 530, 531
SLS-1, 55, 56, 58, 361
SLS-2, 64, 65
heart
atrial natriuretic peptide (ANP), 53–63, 357, 390
natriuretic peptide development, 154–155, 159–162, 325, 328
HEDS *see* Human Exploration and Development of Space Enterprise
hematology experiments
blood volume, 362, 393
erythropoiesis, 363, 394
rat, 55–60, 62–63, 64–66, 68–69, 362, 363, 393, 394
Hemerocallis see daylily (*Hemerocallis*) cell experiments
Homo sapiens see human (*Homo sapiens*) experiments
hornweed (*Ceratophyllum derersum*) experiments, 229
HRF *see* Human Research Facility
human (*Homo sapiens*) experiments
cell experiments, 26, 27, 149–151
Biorack 1, 214
Biorack 2, 224
Biorack 3, 225
NIH.C4, 313
NIH.C6, 222
organism experiments, 8, 26
SL-J, 107–109, 111–114, 350
Human Exploration and Development of Space (HEDS) Enterprise, 5
Human Research Facility (HRF), 208

I

IACUC *see* Institutional Animal Care and Use Committee
IGF-1 *see* insulin-like growth factor
IMBP *see* Institute of Biomedical Problems (Russia)
IML payloads *see* International Microgravity Laboratory (IML) payloads
IMMUNE payloads, 129
IMMUNE.1, 26, 29, 31, 130–133, 285–289, 434
IMMUNE.2, 26, 29, 50, 134–136, 146, 170, 290–294, 434
immunology experiments
antioxidant defense system, 365
complications to illness in immunocompromised subjects, 130–136, 293, 294
experimental subjects
human, 224
mouse, 224
monkey, 196–199, 201–202, 277
rat, 55–60, 62–63, 64–66, 68–69, 76–78, 129–136, 154–158, 217, 293, 294, 320, 336, 364, 365, 395
immune alterations, 395
immune response development, 154–155, 320
immune system disorders, 364
interleukin production, 76–78, 336
lipid peroxidation, 365
polyethylene glycol-interleukin-2 (PEG-IL-2), 130–136, 293, 294
resistance to infection, 154–155, 196–199, 277, 320
Incubator 1
experiments, 186, 187–192, 205, 295–303
overview, 26, 184, 185
publications, 434
Incubator 2
experiments, 187–192, 205, 295–302
overview, 26, 184, 185
publications, 434
Incubator 3, 27, 238
Institute of Biomedical Problems (IMBP) (Russia), 13, 188
Institutional Animal Care and Use Committee (IACUC), 24
insulin-like growth factor (IGF-1), 217, 276
interleukins, 134–136, 293, 294, 336
International cooperation *see* cooperation between space agencies
International Microgravity Laboratory (IML) payloads, 83–84
IML-1, 26, 85–88, 90–93, 285–289, 427–431
IML-2, 10, 12, 17, 26, 83, 94–98, 290–292, 431–434
International Space Life Sciences Working Group (ISLSWG), 9, 110
International Space Station (ISS) program, 8, 9, 13, 203
Advanced Animal Habitat, 156, 208
Automated Transfer Vehicle, 11
Canada and, 9, 10, 206
Cell Culture Unit, 144, 208
Centrifuge Accommodation Module (CAM), 10, 13, 206
components, 206, 207
European Space Agency, 11, 206

Gravitational Biology Facility, 208
Human Research Facility, 208
Italy, 12
Japan, 13, 206
Japanese Experiment Module (JEM), 13, 206
Life Sciences Glovebox, 206
Phase 1, 181, 206
post-1995 missions, 205–209
Remote Manipulator System robotic arm, 9
Russia, 14, 206
Zarya module, 205
Internet Grateful Med (Web site), 415
intestine
digestive transportation function, 367
microflora, 368, 397
ISLSWG *see* International Space Life Sciences Working Group
ISS program *see* International Space Station program
Italy, 12

J

Japan
BRIC-10, 226
BRIC-13, 233
BRIC-PEG/C, 234
IML payloads, 83, 85
ISS program, 13, 205, 206
National Space Development Agency (NASDA), 12, 94, 96, 105–107, 208
Neurolab, 232
NIH.C8, 235
NIH.R3, 213
SL-J, 12, 105–107
Vestibular Function Experiment Unit (VFEU), 236
jellyfish (*Aurelia aurita*) experiments, 19, 26
IML-2, 94–95, 290, 431–434
SLS-1, 54, 55–63, 356
Jellyfish Kits and Kit Containers, 55, 58, 356, 506–507
Johnson Space Center (JSC), 2, 10
JSC *see* Johnson Space Center

K

Kennedy Space Center (KSC), 6–8
Animal Care Section, 6
aquatic laboratories, 6, 8
Baseline Data Collection Facility (BDCF), 8
Experiments Monitoring Area (EMA), 8
Hangar L, 6, 7
history, 6
life sciences programs at, 25–27
Orbiter Environmental Simulator (OES), 8
research studies, 2, 6–8
Space Shuttle program, 30
KSC *see* Kennedy Space Center

L

Life and Microgravity Spacelab (LMS), 27, 203, 220
Life Science Cell Culture Kit (CCK), 94
Life Sciences Data Archive (LSDA) program, xi, xii
life support, 20–21
light, in habitats, 21
LMS *see* Life and Microgravity Spacelab
Loblolly pine (*Pinus taeda*) seedling experiments, 27, 220
LSDA *see* Life Sciences Data Archive program
lungs, microgravity and, 383
Lycoperscion esculentum see tomato (*Lycoperscion esculentum*) seedling experiments
Lymantria dispar see gypsy moth (*Lymantria dispar*) experiments
Lytechinus pictus see sea urchin (*Lytechinus pictus*) experiments

M

Macaca mulatta see rhesus monkey (*Macaca mulatta*) experiments
mammals, as research subjects, 19
Manduca sexta see hornworm (*Manduca sexta*) experiments
manned missions, 19–20
Medaka (*Oryzias latipes*) embryo experiments, 27, 220
metabolism and nutrition experiments
digestive physiology, 397
energy requirements, 196–199, 278
experimental subjects
monkey, 196–199, 201–202, 252, 278
rat, 55–60, 62–63, 64–66, 68–69, 154–158, 321, 366–368, 396, 397
fluid electrolyte metabolism, 154–155, 321
gastric hypersecretory syndrome, 366
intestine
microflora, 368, 397
digestive transportation function, 367
stressogenic effects, 396
Microgravity Plant Nutrient Experiment (MPNE), 27, 89, 230
Middeck Ambient Stowage Insert (MASI), 87, 287, 288, 504–505
Mir space station, 181, see also NASA/Mir program
American astronauts on, 204
Core Module, 181, 182
collision with Progress, 247
Docking Module, 181, 182
Kristall 1 Module, 181, 182, 188
Kvant 1 Module, 181, 182
Mir 18, 187, 188, 295–303
Mir 19, 188, 295–303
Mir 20, 188
Progress 227, 186, 187, 247
Spektr Module, 181, 182, 247
molecular biology experiments, see cell and molecular biology experiments
moss (*Ceratodon purpureus*) experiments, 27, 227
motion sickness
autogenic feedback, 108, 350
Autogenic Feedback System-2 (AFS-2), 107, 109, 111, 350, 470, 471
mouse-ear cress (*Arabidopsis thaliana*) experiments, 27
Biorack 2, 224

Biorack 3, 225
CHROMEX-03, 41–43, 266, 420
CHROMEX-04, 44–47, 269, 420–421
CHROMEX-05, 48–49, 270, 421–422
mouse (*Mus musculus*) experiments, 26, 27
cell experiments, 26, 27
IML-1, 26, 85–88, 90–93, 285, 427–431
organism experiments, 26
Biorack 2, 224
Biorack 3, 225
IML-1, 26, 85–88, 90–93, 285, 427–431
Neurolab, 231–232
MPNE *see* Microgravity Plant Nutrient Experiment
Mus musculus see mouse (*Mus musculus*) experiments
muscle physiology experiments
adrenoceptor, 403
antioxidant enzyme activity, 76–78, 338
body wall musculature, 159–162, 332
enzyme level, 76–78, 338, 370
experimental subjects
chicken cells, 138–143, 145, 146–148, 212, 218
monkey, 196–199, 201–202, 252, 279, 280
rat cells, 138–141, 146–148
rat, 55–60, 62–63, 64–66, 68–69, 72–75, 76–78, 79–81, 154–162, 306, 311, 322, 331–333, 337, 338, 369–372, 398–405
gastrocnemius, 196–199, 280
glucose uptake, 72–75, 323
hindlimb suspension in rats, 72–78, 333, 338, 372, 402–404
muscle atrophy mechanism, 99–103, 342, 372, 399
myoblast, 138–141, 146–148, 306, 311
myocyte, 401
myofiber, 142–143, 196–199, 279, 308
myosin, 159–162, 331, 370
myotendinous junction (MTJ), 400
neuromuscular junction, 372
neuromuscular system, development and maintenance, 154–155, 322
oxidative enzyme activity, 76–78, 338
PARE 1-1, 72–75, 333
sensory receptors in skeletal muscle, 154–155, 323
single-fiber muscle function, 402
skeletal muscle, 76–78, 337, 369, 371, 398. 399, 404, 405
soleus, 196–199, 280, 402–404
tibialis anterior, 196–199, 280
mustard (*Brassica rapa*) experiments, 27

N

NASA, 5–9
Commercial Space Center (CSC) network, 9, 29
cooperation with international space agencies, 9–14, 83
cooperation with other U.S. agencies, 8–10
Life Sciences Data Archive (LSDA) program, xi
Life Sciences Division, 5, 8, 110
unmanned biosatellite program, 205
NASA Astrobiology Institute (NAI), 6
NASA/Mir kits, 508–509
NASA/Mir program, 181–185, 203, 205, 206, 208, 237–250
experiments, 184, 237
Active Dosimetry of Charged Particles, 27, 184, 249
BRIC-Mir, 27, 184, 244
Effective Dose Measurement During EVA, 27, 184, 242, 247
Effects of Gravity on Insect Circadian Rhythmicity, 27, 184, 245
Environmental Radiation Measurements, 27, 184, 239, 241, 243, 247, 250
Greenhouse 1, 26, 184, 185, 186, 187–192, 205, 284, 426–427
Greenhouse 2, 27, 184, 240
Greenhouse 3, 184, 246
Incubator 1, 26, 184, 185, 186, 187–192, 205, 295–303, 434
Incubator 2, 26, 184, 185, 187–192, 205, 294–302, 434
Incubator 3, 27, 184, 238
NASA/Mir kits, 508–509
NASA Shuttle dockings, 14, 181, 182, 186, 204, 214, 224, 225, 229, 230
overview, 181–182, 184
payloads, 181–192
Phase 1A, 181, 182, 183, 184, 187–192
Phase 1B, 184, 185, 204–205
Space Shuttle, 203
STS-63, 50
NASA Specialized Centers of Research and Training (NSCORT), 8
NASDA *see* National Space Development Agency
National Institutes of Health (NIH), joint activities with NASA, 8, 137, 153
National Institutes of Health Biology 1 (NIH.B1), 204
National Institutes of Health Cells (NIH.C) payloads, 137
NIH.C1, 26, 138–141, 304–306, 435
NIH.C2, 26, 142–143, 145, 307, 308, 435–436
NIH.C3, 26, 50, 134, 146–148, 170, 309–311, 436
NIH.C4, 26, 149–151, 178, 222, 312, 313, 436
NIH.C5, 27, 212, 218
NIH.C6, 27, 222
NIH.C7, 27, 218
NIH.C8, 27, 235
National Institutes of Health Rodents (NIH.R) payloads, 137, 153–162
NIH.R1, 26, 142, 154–155, 157–158, 314–326, 436–440
NIH.R2, 26, 159–162, 174, 440–442
NIH.R3, 27, 213
NIH.R4, 27, 223
National Space Agency of Ukraine (NKAU), 14
National Space Development Agency (NASDA) (Japanese space agency), 12, 94, 96, 105–107, 208
natriuretic peptide, 325, 328, 381
nematode (*Caenorhabditis elegans*) experiments, 26, 27
Biorack 1, 214
IML-1, 85–88, 90–93, 289
Neurolab, 11, 12, 27, 203, 231–232, 236

neurophysiology experiments
brain
ANP-binding sites, 382
cortex, 373, 378, 407
end brain, 407
fluid regulating hormones in, 381
hypothalamus, histochemistry, 375
intermediate brain, 407
medulla oblongata, 379
natriuretic peptide development, 154–155, 325
primary perceptive structure, 376
proprioceptive cerebellum, 408
vegetative nuclei, 409
vestibular structures, 409
choroid plexus, 154–155, 325, 406
endorphin secretion, 339
enkephalin secretion, 339
experimental subjects
human, 107–109, 111–114, 350
jellyfish, 94–98
mouse, 231
monkey, 196–199, 201–202, 281–283
newt, 94–98, 291
rat, 55–60, 62–63, 64–66, 68–69, 76–78, 154–158, 231, 323–326, 339, 373–382, 406–410
snail, 229
swordtail fish, 229
toadfish, 27, 231, 236
gravity receptors, 94–98, 291, 380, 410
motion sickness, 108–109, 350
neuromuscular system, development and maintenance, 154–155, 322
neurons, 196–199, 282, 374, 377, 378, 379
optic nerve development, 154–155, 326
sensory receptors in skeletal muscle, 154–155, 323
spinal cord, 377
stress and endorphin and enkephalin secretion, 76–78, 339
vestibular development, 154–155, 187–192, 299, 324
vestibulo-ocular reflex (VOR), 196–199, 281, 283
newt (*Cynopus pyrrhogaster*) experiments, 17, 26
IML-2, 94–98, 291
Nicotiana tabacum see tobacco (*Nicotiana tabacum*) experiments
NIH *see* National Institutes of Health
NIH.B1 *see* National Institutes of Health Biology 1
NIH.C payloads *see* National Institutes of Health Cells (NIH.C) payloads
NIH.R payloads *see* National Institutes of Health Rodents (NIH.R) payloads
Nitex Sleeve/Horticultural Foam system, 45, 46
Nizemi, 83, 96, 290
NKAU *see* National Space Agency of Ukraine
NSCORT *see* NASA Specialized Centers of Research and Training
nutrient delivery systems, CHROMEX-04, 45, 46
nutrition experiments *see* metabolism and nutrition experiments

O

oat (*Avena sativa*) experiments, 26
IML-1, 85–88, 90–93, 287, 427–431
OES *see* Orbiter Environmental Simulator
Office of Life and Microgravity Sciences (OLMSA), 5
Olympus 802 camcorder, 510–511
Opsanus tau see oyster toadfish (*Opsanus tau*) experiments
Orbiter Environmental Simulator (OES), 8, 39, 42, 45, 49, 51, 122, 155, 168
orchardgrass (*Dactylis glomerata*) experiments, 26, 27, 167–169, 233, 259
Oryzias latipes see medaka (*Oryzias latipes*) embryo experiments
osteoporosis, 117–118
oyster toadfish (*Opsanus tau*) experiments, 27, 231, 236

P

pancreas, exocrine function, 359
PARE payloads *see* Physiological and Anatomical Rodent Experiment (PARE) payloads
Particulate Containment Demonstration Test (PCDT), 56, 57, 360
Passivated Implanted Silicon Detectors (PIPS), 249
payloads
Biological Research in Canisters (BRIC) payloads, 163–179, 257–263, 411
CHROMEX payloads, 33–51, 264–271
Cosmos Biosatellite program, 26, 193–199, 201–202, 272–283
IMMUNE payloads, 129–136
International Microgravity Laboratory (IML) payloads, 83–98, 285–292
middeck payloads, 115
NASA/Mir program, 183–185, 237–250, 295–303
National Institutes of Health Cell (NIH.C) payloads, 138–151, 304–313
National Institutes of Health Rodent (NIH.R) payloads, 153–162, 314–332
Physiological and Anatomical Rodent Experiment (PARE) payloads, 72–81, 333–341
Physiological Systems Experiment (PSE) payloads, 115–127, 343–348
Pituitary Hormone Cell Function (PHCF) payload, 99–103, 342
postflight retrieval, 20
preparing and loading, 20
Spacelab, 53, 54, 55–60, 62–63, 64–66, 68–69, 105–109, 111–114, 349–351, 352–410, 412
Space Shuttle program, 29
Space Transportation System, 26–27
PCDT *see* Particulate Containment Demonstration Test
PCOC *see* Plant Carry-On Container
PEMBSIS experiment, 94–98
PFC *see* Plant Fixation Chamber
PGCs see Plant Growth Chambers
PGU *see* Plant Growth Unit

PHCF payload see Pituitary Hormone Cell Function (PHCF) payload
Phototropic Transients (FOTRAN) experiment, 85–87, 90–92, 288
Physarum polycephalum see slime mold (*Physarum polycephalum*) experiments
Physiological and Anatomical Rodent Experiment (PARE) payloads, 71
PARE.01, 26, 72–75, 333, 442
PARE.02, 26, 41, 76–78, 334–339, 442–444
PARE.03, 26, 79–81, 340, 341, 444–445
Physiological Systems Experiment (PSE) payloads, 115–116
PSE.02, 26, 29, 117–119, 343, 344, 445
PSE.03, 26, 29, 31, 120–123, 345, 346, 445–446
PSE.04, 26, 29, 124–127, 347, 348, 446
Pinus taeda see Loblolly pine (*Pinus taeda*) experiments
Pituitary Hormone Cell Function (PHCF) payload, 26, 99–103, 342, 445
pituitary somatotrophs, 391
plant biology experiments
CEBAS, 27, 229, 232
cell division, 34–40, 44–47, 85–88, 90–93, 174–177, 262, 264, 265, 267, 286
chromosome behavior, 34–40, 44–47, 94–98, 264, 265, 267, 292
CUE, 14, 27, 227–228
crop plant productivity, 187–192, 284
embryo, 94–98, 108–109, 167–169, 174–177, 259, 262, 292, 351
FOTRAN experiment, 85–87, 90–92, 288
growth and development, 44–51, 268, 270, 271
GTHRES experiment, 85, 86, 87, 90, 91, 92, 287
LMS, 27, 203, 220
metabolism, 44–47, 268
missions, 26–27
Biorack 2, 27, 224
Biorack 3, 27, 225
BRIC-01, 26, 48, 164–166, 257, 258, 411, 417
BRIC-02, 26, 167–169, 233, 259, 417
BRIC-03, 26, 50, 134, 146, 170–171, 173, 260, 417–418
BRIC-05, 26, 159, 174–177, 262, 418
BRIC-08, 27, 78, 219
BRIC-09, 27, 221
BRIC-10, 27, 226
BRIC-13, 27, 233
BRIC-Mir, 27, 184, 244
BRIC-PEG/C, 27, 234
CHROMEX-01, 33, 34–37, 264, 419
CHROMEX-02, 33, 38–40, 265, 420
CHROMEX-03, 26, 41–43, 266, 420
CHROMEX-04, 26, 44–47, 267–269, 420–421
CHROMEX-05, 26, 48–49, 164, 270, 421–422
CHROMEX-06, 26, 50–51, 134, 146, 170, 271, 422
Greenhouse 1, 26, 184, 185, 186, 187–192, 205, 284, 426–427
Greenhouse 2, 27, 184, 240
Greenhouse 3, 184, 246
IML-1, 26, 85–88, 90–93, 285–289, 427–431
IML-2, 10, 12, 17, 26, 83, 94, 94–98, 290–292, 431–434
SL-J, 107–109, 111–114, 351, 446–448
MPNE, 27, 89, 230
photosynthesis, 187–192, 284
plants as research subjects, 20
reproductive development, 48–49, 85–88, 90–93, 270, 286
respiration, 187–192, 284
seed development, 41–43, 266
seed production, 44–47, 269
sensory systems, 8
starch, 164–166, 170–171, 258, 260
transpiration, 187–192, 284
tropistic response, 85–88, 287, 288
YEAST experiment, 85, 86, 87, 88, 91, 93, 286
Plant Carry-On Container (PCOC), 87, 287, 288, 504–505
Plant Culture Research Experiment, 109
Plant Fixation Chamber (PFC), 94, 96
Plant Growth Chamber (PGC), 51, 512
Plant Growth Unit (PGU)
history, 89
missions flown, 512
CHROMEX-01, 34, 35, 264
CHROMEX-02, 38, 39, 265
CHROMEX-03, 41, 42, 266
CHROMEX-04, 44, 45, 267–269
CHROMEX-05, 48, 49, 270
CHROMEX-06, 50, 51, 271
LMS, 220
overview, 512
schematic, 513
specifications, 512
plant reproduction, mouse-ear cress, 41–43, 44–47, 48–49
polyethylene glycol-interleukin-2 (PEG-IL-2)
IMMUNE.1 payload, 293
IMMUNE.2 payload, 134–136, 294
Portable Linear Sled (PLS), 198, 199
press kits *see* NASA press kits
primates, *see also* rhesus monkey experiments
as research subjects, 19, 21
PSE payloads *see* Physiological Systems Experiment payloads
Pseudotsuga menziesii see Douglas fir (*Pseudotsuga menziesii*) experiments
Psychomotor Test System (PTS), 198
publications, 415
Biological Research in Canisters (BRIC) payloads
BRIC-01, 166, 417
BRIC-02, 169, 417
BRIC-03, 173, 417–418
BRIC-04, 177, 418
BRIC-05, 177, 418
BRIC-06, 179, 419
CHROMEX payloads
CHROMEX-01, 37, 419
CHROMEX-02, 40, 420

CHROMEX-03, 43, 420
CHROMEX-04, 47, 420–421
CHROMEX-05, 49, 421–422
CHROMEX-06, 51, 422
Cosmos 2999, 202, 422–426
hardware
Ambient Temperature Recorder (ATR-4), 464
Animal Enclosure Module (AEM), 466, 468
Autogenic Feedback System-2 (AFS-2), 470
Biorack US 1, 476
Biorack US 2, 478
Biorack US 3, 480, 482
Cosmos 2229, 484, 486, 488, 490
dissecting microscope, 492
Frog Environmental Unit (FEU), 494
Gas Exchange Measurement System (GEMS), 496
General Purpose Transfer Unit (GPTU), 498
General Purpose Work Station (GPWS), 500
Gravitational Plant Physiology Facility (GPPF), 502
Jellyfish Kits, 506
NASA/Mir kits, 508
Olympus 802 camcorder, 510
Plant Growth Unit (PGU), 512
Refrigerator/Incubator Module (R/IM), 516
Research Animal Holding Facility (RAHF), 518, 524, 526, 528
Small Mass Measuring Instrument (SMMI), 530
Space Tissue Loss-A (STL-A) Module, 532
IMMUNE payloads
IMMUNE.1, 133, 434
IMMUNE.2, 136, 434
International Microgravity Laboratory (IML) payloads
IML-1, 93, 427–431
IML-2, 98, 431–434
NASA/Mir program, 182, 192, 426–427, 434
Greenhouse 1, 426–427
Incubator 1, 434
Incubator 2, 434
NASA press kits
STS-29, 37
STS-40, 63
STS-41, 40
STS-46, 103
STS-47, 114
STS-48, 75
STS-51, 47
STS-52, 119
STS-54, 43, 78
STS-56, 81
STS-57, 31, 123
STS-58, 70
STS-59, 141
STS-60, 31, 133
STS-62, 127
STS-63, 51, 136, 148, 173
STS-64, 169
STS-65, 98
STS-66, 145, 158
STS-68, 49, 164
STS-69, 151, 179
STS-70, 162, 177
STS-71, 192
STS-74, 192
National Institutes of Health Cells (NIH.C) payloads
NIH.C1, 141, 435
NIH.C2, 145, 435–436
NIH.C3, 148, 436
NIH.C4, 151, 436
National Institutes of Health Rodents (NIH.R) payloads
NIH.R1, 158, 436–440
NIH.R2, 162, 440–442
Physiological and Anatomical Rodent Experiment (PARE) payloads
PARE.01, 75, 442
PARE.02, 78, 442–444
PARE.03, 81, 444–445
Pituitary Hormone Cell Function (PHCF) payload, 103, 445
post-1995 payloads, 209–210
Physiological Systems Experiment (PSE) payloads
PSE.02, 119, 445
PSE.03, 123, 445–446
PSE.04, 127, 446
Spacelab programs
SL-J, 114, 446–448
SLS-1, 63, 448–454
SLS-2, 69–70, 454–460
pulmonary physiology experiments
lung tissue histology, 383
rats, 55–60, 62–63, 383

Q

quail (*Coturnix coturnix*) egg experiments, 26, 27
NASA/Mir experiments, 186, 187, 238, 295–303

R

RADIAT experiment, 85, 86, 88, 90–92, 289
radiation biology experiments, 8, 27
cosmic rays, 85–88, 90–93
experimental subjects
human cells, 214
mouse, 85–88, 90–93, 214
nematode cells, 214, 289
NASA/Mir, 27, 239, 241, 242, 243, 247, 248, 249, 250
RADIAT experiment, 85, 86, 88, 90–92, 289
RAHF *see* Research Animal Holding Facility
rat (*Rattus norvegicus*) experiments, 26, 27
cell experiments, 26, 27, 138–141, 146–151
NIH.C1, 304, 306
NIH.C3, 309, 311
NIH.C4, 312
NIH.C6, 222
organism experiments, 26, 27
Biological Research in Canisters (BRIC) payloads, 411

IMMUNE payloads, 129–136, 214, 293, 294
Life and Microgravity Spacelab (LMS), 220
National Institutes of Health Rodents (NIH.R) payloads, 154–162, 213, 223, 314–332
Neurolab, 231–232
Physiological and Anatomical Rodent Experi- (PARE) payloads, 72–81, 333–341
Physiological System Experiments (PSE) payloads, 117–127, 343–348
Pituitary Hormone Cell Function (PHCF) payload, 100–103, 342
Spacelab Life Sciences (SLS) payloads, 53, 54, 55–60, 62–63, 64–66, 68–69, 352–355, 357–359, 362–410, 412
rats, Wistar strain, 17–18
Rattus norvegicus see rat (*Rattus norvegicus*) experiments
Refrigerator/Incubator Module (R/IM)
missions flown
IML-2, 94, 96, 290
PHCF-1, 100, 101, 342
SLJ-1, 107, 111, 349
SLS-1, 55, 58, 356
SLS-2, 64, 65
overview, 516
schematic, 517
specifications, 516
renal, fluid, and electrolyte physiology experiments
calcium loss, 384
cellular homeostasis, 411
experimental subjects
monkey, 252
rat, 55–60, 62–63, 64–66, 68–69, 384, 411, 412
fluid-electrolyte metabolism, 384, 412
reproduction, mouse-ear cress, 41–43, 44–47, 48–49
Research Animal Holding Facility (RAHF)
Environmental Control System (ECS), 518, 520–521
Feeding and Waste Management Systems, 518, 522–523
Inflight Refill Unit (IRU), 518, 524–525
missions flown
BRIC-01, 411
Neurolab, 232
SLS-1, 55, 56, 57, 58, 354, 357, 358, 360, 362, 363, 368–370, 372, 380–383
SLS-2, 64, 65, 66, 385–410, 412
overview, 518
Rodent Cage, 526–527
schematic, 519
specifications, 518
Water System, 528–529
rhesus monkey (*Macaca mulatta*)
habitat for, 21
as research subjects, 19
rhesus monkey (*Macaca mulatta*) experiments, 26, 27
Bion 11, 252
Cosmos 2229, 196–199, 201–202, 272–283
Rhesus Project, 11, 205
R/IM *see* Refrigerator/Incubator Module
RSA *see* Russian Space Agency
Russia, 13–14, 188, 205, 206, *see also* NASA/Mir program
Russian Space Agency (RSA), 13–14
NASA/Mir program, 14, 181–182, 204, 206

S

Saccharomyces cerevisiae see yeast (*Saccharomyces cerevisiae*) experiments
sea urchin experiments, 27
sea urchin (*Lytechinus pictus*) experiments, 27, 215, 225
sea urchin (*Strongelocentrotus pupuratus*) experiments, 27, 224
singly housed animals, 21
skin healing, PSE.03, 120–123
slime mold (*Physarum polycephalum*) experiments, 26, 178–179, 263
SL-J payload *see* Spacelab-J payload
SLS payloads *see* Spacelab Life Sciences (SLS) payloads
small intestine
digestive transportation function, 367
microflora, 368
Small Mass Measuring Instrument (SMMI)
missions flown
SLS-1, 55, 56, 58, 361
SLS-2, 64, 65
overview, 530
schematic, 531
specifications, 530
snail (*Biomphalaria glabrata*) experiments, 27, 229, 232
soybean (*Glycine max*) experiments, 26, 27, 164–166, 170–173, 258, 260
Soyuz missions, 14, 196
Soyuz 70, 26, 184
Soyuz spacecraft, 181
Space Adaptation Syndrome, 108, 350
SPACEHAB, Inc., 30
SPACEHAB module, 30, 50, 115, 120, 146, 170, 204, 214, 215, 217, 224, 225, 235
Spacelab, 30, 203
European Space Agency, 10
International Microgravity Laboratory (IML) Payloads, 83–84
Life and Microgravity Spacelab (LMS), 220
Neurolab, 231
Spacelab Life Sciences (SLS) payloads, 53–54
Spacelab-J (SL-J) payload, 105–106
Spacelab-J (SL-J) payload, 26
experiments, 108–109, 111–114, 349–351
Japan, 12, 105–107
overview, 105–108
payload, 105–108
publications, 114, 446–448
Spacelab Life Sciences (SLS) payloads
Spacelab Life Sciences 1 (SLS-1)
Canada, 10
experiments, 53–54, 55–60, 62–63, 352–384
overview, 53, 55–56, 110
payload, 10, 14, 26, 55–60, 62–63
publications, 63, 448–454

Spacelab Life Sciences 2 (SLS-2)
experiments, 21–22, 64–66, 68–69, 385–410, 412
overview, 53, 64, 110
payload, 14, 19, 26, 64–66, 68–69
publications, 69–70, 454–460
Spacelab Life Sciences 3 (SLS-3), 53, 61, 108, 205
space life sciences research, 1–3, 5, 17
biosampling, 21–22
control groups, 22, 24
defined, 2
ethics of animal use, 23
habitat and life support, 20–21
loading and retrieval, 20
manned vs. unmanned missions, 19–20
monitoring and welfare, 21
regulation and oversight, 24
selection and training, 17–19
Spaceline (Web site), 415
space motion sickness
autogenic feedback, 108, 350
Autogenic Feedback System-2 (AFS-2), 107, 109, 111, 350, 470, 471
Space Shuttle program, 29–30, 203–204, 211, *see also* Space Transportation System (STS)
Space Station Biological Research Project (SSBRP), 208
Space Tissue Loss-A (STL-A) Module
missions flown
NIH.C1, 138, 139, 304–306
NIH.C2, 142, 143, 307, 308
NIH.C3, 146, 147, 309–311
NIH.C4, 149, 150, 312
NIH.C5, 212
NIH.C7, 218
overview, 532
schematic, 533
specifications, 532
Space Tissue Loss-B (STL-B) Module, 220
Space Transportation System (STS)
Canada and, 10
commercial sponsorship, 8–9, 29
European Space Agency and, 11
facilities, 30
France and, 11
Japan, 12
orbiters, 30
SPACEHAB module, 30
STS-4, 6
STS-29
CHROMEX-01, 34–35, 37
experiments, 34–35, 37
overview, 34
payload, 33, 34
STS-40
experiments, 26, 55–60, 62–63
overview, 11, 26, 55–56
payload, 10, 14, 26, 55
SLS-1, 55–60, 62–63
STS-41
CHROMEX-02, 38–40
experiments, 38–40
overview, 38
payload, 33, 38
STS-42
experiments, 26, 85–88, 90–93
IML-1, 85–88, 90–93
overview, 11, 26, 85
payload, 26, 85
STS-46
experiments, 26, 100–103
overview, 12, 26, 100
payload, 26, 100
PHCF, 100–103
STS-47
experiments, 26, 105–109, 111–114
overview, 26, 107–108
payload, 26, 107–108
Spacelab-J, 105–109, 111–114
STS-48
experiments, 26, 72–75
overview, 26, 72
PARE.01, 72–75
payload, 26, 72
STS-51
CHROMEX-04, 44–47
experiments, 26, 44–47
overview, 26, 44
payload, 26, 33, 44
STS-52
experiments, 26, 117–119
overview, 26, 29, 117
payload, 9, 26, 115–117
PSE.02, 116, 117–119
STS-54
CHROMEX-03, 41–43, 76
experiments, 26, 41–43, 76–78
overview, 26, 41, 76
PARE.02, 76–78
payload, 26, 33, 41, 76
STS-56
experiments, 26, 79–81
overview, 26, 79
PARE.03, 79–81
payload, 26, 79
STS-57
experiments, 26, 120–123
overview, 26, 29, 31, 120
payload, 9, 26, 115–116, 120
PSE.03, 120–123
STS-58
experiments, 19–20, 21–22, 26, 64–66, 68–69
overview, 11, 26, 64
payload, 12, 14, 19–20, 26, 64
SLS-2, 64–66, 68–69
STS-59
experiments, 26, 138–141
NIH.C1, 138–141

overview, 26, 138
payload, 8, 26, 138–149
STS-60
experiments, 26, 130–132
IMMUNE.1, 129, 130–133
NASA/Mir program, 181
overview, 26, 29, 31, 130
payload, 9, 14, 26, 129, 130
STS-62
experiments, 26, 124–127
overview, 26, 29, 124
payload, 9, 26, 115–116, 124
PSE.04, 124–127
STS-63
BRIC-03, 146, 170–171, 173
CHROMEX-06, 50–51, 134, 146, 170
experiments, 26, 50–51, 134–136, 146–148, 170–171, 173
IMMUNE.2, 129, 134–136, 146, 170
NIH.C3, 146–148, 170
overview, 26, 29, 50, 134, 146, 170
payload, 8, 9, 14, 26, 50, 129, 134, 146–147, 170–171
STS-64
BRIC-02, 167–169
experiments, 26, 167–169
overview, 26, 167
payload, 26, 167–168
STS-65
experiments, 26, 94–98
IML-2, 94–98
overview, 11, 26, 94
payload, 10, 12, 26, 94
STS-66
experiments, 26, 142–143, 145, 154–155, 157–158
NIH.C2, 142–143, 145
NIH.R1, 154–155, 157–158
overview, 26, 142, 154
payload, 8, 26, 142–143, 154–155
STS-68
BRIC-01, 164–166
CHROMEX-05, 48–49, 164
experiments, 26, 46–49, 164–166
overview, 26, 48, 164
payload, 26, 33, 48, 164–165
STS-69
BRIC-06, 149, 178–179
experiments, 26, 149–150, 178–179
NIH.C4, 149–151, 178
overview, 26, 149, 178
payload, 8, 26, 149–150, 178–179
STS-70
BRIC-04, 159, 174–175
BRIC-05, 159, 174–175
experiments, 26, 159–162, 174–175
NIH.R2, 159–162
overview, 26, 159, 174
payload, 8, 26, 159–160, 174–175
STS-71
experiments, 26, 187–192
MASA/Mir docking mission, 146, 181–182, 184, 186, 187–188, 224, 225, 229, 230
overview, 26, 187–188
payload, 26, 187
STS-72
experiments, 27, 212, 213
NIH.C5, 212
NIH.R3, 213
overview, 27
payload, 27, 212, 213
STS-74
NASA/Mir program, 182, 184, 186, 187, 188
overview, 188
STS-76
Biorack 1, 214
experiments, 27, 214
hardware, 11
NASA/Mir program, 184, 204, 214, 238, 239
overview, 27, 31
payload, 27, 214
STS-77
ARF-01, 215
BRIC-07, 216
experiments, 27, 215, 216, 217, 218
IMMUNE.3, 217
NIH.C7, 218
overview, 10, 27, 31
payload, 10, 27, 215, 216, 217, 218
STS-78
BRIC-08, 219
experiments, 27, 219, 220
Life and Microgravity Spacelab (LMS), 220
overview, 10, 27
payload, 10, 27, 219, 220
STS-79
experiments, 27
NASA/Mir program, 184, 204, 238, 239, 240, 241
overview, 27
payload, 27
STS-80
BRIC-09, 221
experiments, 27, 221, 222, 223
NIH.C6, 222
NIH.R4, 223
overview, 27
payload, 27, 221, 222, 223
STS-81
Biorack 2, 224
experiments, 27, 224
hardware, 11
NASA/Mir program, 184, 204, 240, 241, 242, 243, 244
overview, 27, 31
payload, 27, 224
STS-84
Biorack 3, 225
experiments, 27, 225
hardware, 11

NASA/Mir program, 184, 204, 242, 243, 244, 245, 246, 247, 248
overview, 27, 31
payload, 27, 225
STS-85
BRIC-10, 226
experiments, 27, 226
overview, 27
payload, 27, 226
STS-86
experiments, 27
NASA/Mir program, 184, 204, 245, 246, 247, 248, 249, 250
overview, 27
payload, 27
STS-87
CUE, 227–228
experiments, 27, 227
overview, 27
payload, 14, 27, 227
STS-88, 203, 206
STS-89
CEBAS, 229
experiments, 27, 229, 230
MPNE, 230
NASA/Mir program, 184, 204, 249, 250
overview, 27
payload, 27, 229, 230
STS-90
Neurolab, 231–232
experiments, 27, 231
overview, 10, 11, 12, 27
payload, 12, 27, 231
STS-91, 204
STS-92, 204
STS-93, 204
STS-95
BRIC-13, 233
BRIC-PEG/C, 234
experiments, 27, 233, 234, 235
NIH.C8, 235
overview, 27, 31
payload, 12, 27, 233, 234, 235
VFEU, 236
STS-96, 206, 208
STS-107, 204
spinal cord, morphology and histochemistry, 377
SSBRP *see* Space Station Biological Research Project
STL-A see Space Tissue Loss-A Module
STL-B *see* Space Tissue Loss-B Module
stomach, gastric hypersecretory syndrome, 360
Strongelocentrotus purpuratus see sea urchin (*Strongelocentrotus purpuratus*) experiments
STS *see* Space Transportation System
Svet Plant Growth Facility, 240, 246
swordtail fish (*Xiphophorus helleri*) experiments, 27, 229, 232
Synchronous control group, 22

T

tadpole *see* frog (*Xenopus laevis*) experiments
TGF-β *see* transforming growth factor-β
Thermoluminescent Dosimeter System, 242, 247
thymus gland, stressogenic effect of microgravity, 396
thyroid gland, 392
tibia, 272, 386
tissue repair, PSE.03, 120–123, 313, 346
tobacco hornworm (*Manduca sexta*) experiments, 26, 27, 174–177, 261
tobacco (*Nicotiana tabacum*) experiments, 27, 221, 226
tomato (*Lycoperscion esculentum*) experiments, 27, 221, 226
transforming growth factor-β (TGF-β), 222, 313, 346
Trigonoscelis gigas see black-bodies beetle (*Trigonoscelis gigas*) experiments
Triticum aestivum see wheat (*Triticum aestivum*) experiments

U

Ukraine, 14, 27, 227–228
CUE, 14, 27, 227–228
unmanned missions, 19–20, 205
Utilization Flights (UF), 203–204

V

vertebrate experiments, 26–27
Vestibular Function Experiment Unit (VFEU) (hardware), 12, 232, 236
Vestibular Function Experiment Unit (VFEU), 27, 236
video monitoring, of animal subjects, 21
Vivarium control group, 22

W

waste material, in habitats, 21
Web sites
Ames Research Center Space Life Sciences, 15
Canadian Space Agency (CSA), 14
European Space Agency Microgravity Database, 15
Life Sciences Data Archive (LSDA) program, xii
wheat (*Triticum aestivum*) experiments, 26, 27
Super-Dwarf wheat, 26, 27
CHROMEX-04, 44–47, 267, 268, 420–421
CHROMEX-06, 50–51, 271, 422
Greenhouse 1, 25, 184, 185, 186, 187–192, 205, 284, 426–427
Greenhouse 2, 240
Triticum aestivum cv. Broom, 26, 27
IML-1, 85–88, 90–93, 288, 428–431
Triticum aestivum cv. Yecora rojo, 27
MPNE, 230

X

Xenopus laevis see frog (*Xenopus laevis*) experiments
Xiphophorus helleri see swordtail fish (*Xiphophorus helleri*) experiments

Y

YEAST experiment, 85, 86, 87, 88, 91, 93, 286
yeast (*Saccharomyces cerevisiae*) experiments, 26
IML-1, 85–88, 90–93, 286, 427–431

Page intentionally left blank

A

Abelew, T.A., 488
Adams, G.R., 451
Ajaz, H., 318
Alberts, J.R., 317, 330, 437, 438, 441
Alekseev, E.I., 353, 391
Alexandre, C., 385, 454
Alfrey, C.P., 362, 393, 455
Allebban, Z., 69, 450, 455
Allen, D.L., 457
Alpatov, A.M., 275
Amdrieux, C., 368
Anderson, A.J., 271
Anderson, K., 271
Anderson, L.H., 436
Anderson, P., 238
Anderson, P.A.W., 295
Arikawa, H., 69
Arnaud, C.D., 274
Arnaud, S.B., 127, 272, 422, 423, 448
Avery, L., 103

B

Backup, P., 344, 445
Badakva, A.M., 283
Baer, L.A., 526
Baker, M.J., 69
Bakulin, A.V., 272, 273, 352, 448
Baldwin, K.M., 69, 231, 337, 369, 398, 443, 451, 456
Ball, S.M., 494
Ballard, R.W., 24, 293
Barald, K.F., 322
Barnes, R., 518, 524
Becker, R.F., 444
Belichenko, P.A., 378, 379
Bell, R., 257
Benghuzzi, H.A., 314
Bennett, J.H., 421
Benton, E., 239, 241, 243, 248, 250
Benton, E.B., 476
Benton, E.V., 476
Berger, B., 209
Bergner, D., 476
Berkovitch, J., 284
Besova, N.V., 319
Bikle, D.D., 334, 442
Bingham, G.E., 284, 426, 496
Bircher, B.W., 430
Bishop, D.L., 422
Black, S., 114, 349, 446
Block, I., 263, 419
Boda, K., 434
Bodine, S.C., 279
Bodine-Fowler, S., 252, 424, 425
Bolton, L., 445
Bonting, S.L., 498
Borchert, M.S., 326, 440
Borkowski, G.L., 445
Boskey, A.L., 212, 218, 307, 435
Briggs, R., 182, 210
Brommage, T.G., 454
Brown, A.H., 287, 288, 428, 429, 430, 502
Brown, C.S., 173, 227, 258, 260, 417, 418
Brown, D., 439
Bruce, L.L., 299, 324, 439, 440
Bruschi, C.V., 286, 428, 478
Bubenheim, D., 284, 496
Buckendahl, P., 274
Buckey, J.C., 69
Bugg, C.E., 516
Burden, H., 330
Burkovskaya, T.E., 353

C

Caiozzo, V.J., 69, 337, 398, 443, 456
Campbell, M., 427
Campbell, W., 284, 426, 496
Cann, C.E., 274, 354, 387, 423
Carman, D.L., 496
Carman, J., 284
Carnino, A., 400
Cavolina, J.M., 348, 446
Chapes, S.K., 293, 294, 434
Chapman, D., 287, 288, 429, 430, 502
Chee, O.K., 431
Chernova, L., 284
Chromiak, J.A., 145, 435
Clark, K.L., 322, 331, 439
Clavel, B., 349
Cohen, B., 281, 425
Congdon, C.C., 455
Conger, B.V., 233, 259, 417
Connolly, J.P., 15, 202, 484, 486, 488, 490
Conrad, G., 238, 296
Corbin, B.J., 526
Cordonnier, C., 402
Correia, M.J., 282, 425
Cosgrove, D., 234
Cowings, P.S., 114, 350, 447, 470
Crispi, M.L., 420, 421

D

Daane, E., 480, 482
Dai, M., 281, 425
Dalton, B.P., 63, 360, 361, 450, 466, 468, 500, 510, 518, 528, 530
D'Amelio, F.E., 374
Daunton, N.G., 374, 376, 452
Davet, J., 440, 459
Davidson, J.M., 445, 446
Davies, P., 182, 210
Davis, B.A., 440
Davis, S., 277
Day, J.R., 446
Dehority, W., 442
Del Tatto, M., 145
Deme, S., 242, 247

Preceding Page Blank

Demikov, O., 227
DeSantis, M.E., 323, 439
Desiderio, D.M., 339, 444
Dickman, J.D., 282
Dotsenko, M.A., 276, 278
Doty, S.B., 235, 238, 297, 304, 307, 309, 354, 387, 435
Driscoll, T.B., 362, 393
Drobyshev, V.I., 377
Dubrovin, L., 500
Duke, J., 427
Duke, P.J., 93, 285, 428, 480, 482
Dumars, P., 162
Durnova, G.N., 353, 386, 396, 455
Dyachkova, L.N., 373, 407, 452

E

Edgerton, V.R., 252, 279, 280, 371, 377, 425
Eidesmo, T., 429
Elland, C., 162
Elliott, A., 383
Ellis, S., 372, 404
Eodice, M.T., 470, 494
Esposito, M.S., 286, 428, 478
Evans, G.L., 343, 348, 444, 455
Evans, H.K., 273
Evans, J., 500

F

Fagette, S., 390, 453, 455
Falempin, M., 457
Fareh, J., 390, 453, 459
Fast, T.N., 63, 466, 468, 500, 510, 518, 528, 530
Fedorov, A.A., 378, 379
Fedotova, N.Y., 353
Fejtek, M., 332, 441, 442, 446
Feldman, E.L., 322
Fermin, C.D., 238, 298, 434
Fidelina, O.V., 459
Finton, B., 15
Fitts, R., 252
Flippen, A.A., 500
Fox, R.A., 455
Fritzsch, B., 238, 299, 324, 439, 440
Frontasyeva, M.V., 353
Fuchs, B.B., 277
Fujita, K. St., 405
Fukushima, A., 447, 470
Fuller, C., 231, 252, 275, 278, 329, 423, 424
Furby, A., 457

G

Gabrion, J.B., 325, 328, 349, 381, 382, 390, 406, 440, 454
Gallegos, G.L., 417, 418
Gao. W.Y., 98, 431, 432
Garetto, L.P., 341, 444, 448
Gauquelin, G., 390
Gershtein, L.M., 374, 452
Gerstenfeld, L.C., 305, 310, 435
Gerzer, R., 357
Gharib, C., 325, 328, 381, 382, 390, 406, 454
Gibson, L.A., 69
Gillespie, L.S., 426
Girten, B., 338
Globus, R.K., 304, 309, 435
Goldwater, D., 293, 294
Goncharova, N.P., 359, 366, 367
Gosselink, K., 276
Gregor, R.J., 488
Griffin, D.W., 275, 278
Grigoriev, A.I., 456
Grindeland, R.E., 103, 252, 276, 342, 358, 375, 408, 409, 424, 449, 526
Grove, D.S., 446
Guikema, J.A., 173, 227, 258, 260
Gundorina, S.F., 353

H

Haas, A.L., 372
Haddad, F., 69
Halloran, B.P., 334, 443
Hallworth, R.J., 432
Hara, H., 434
Harris, J., 334
Harris, S.A., 313, 344, 348, 436
Harrison, J.L., 98
Hartman, P.S., 289
Hatton, D., 223
Hawes, N., 63, 466, 468, 500, 510, 518, 528, 530
Hayes, D., 257
He, L., 421
Heathcote, D.G., 287, 288, 429, 430, 502
Heim, J.M., 449
Hejl, R., 98
Helwig, D.A., 15, 202, 484, 486, 488, 490
Hemmersbach, R., 263
Henke, R.P., 476
Henriksen, E.J., 75, 442
Henry, M.K., 434
Herbutè, S., 325, 382, 406, 454
Herrick, R.E., 69
Hester, P.Y., 238, 300, 434
Heyenga, G., 268, 421
Highstein, S., 231, 236
Hilaire, E.M., 173, 417, 418
Hinds, K., 162
Hinds, W., 403, 500
Hines, J., 439
Hines, M.L., 518, 524
Hoath, S.B., 318, 438
Hoban-Higgins, T., 245, 275, 329, 441
Hodgson, J.A., 280
Hoh, J.F.Y., 370
Holstein, G., 231
Hood, E.E., 271, 422
Horn, E.R., 231
Hughes-Fulford, M., 214, 224, 225
Hughson, R.L., 454

Hutchinson, T., 272, 423
Hymer, W.C., 103, 342, 343, 347, 445, 449

I

Ichiki, A.T., 69, 363, 394, 455, 456
Ilvina-Kakueva, E.I., 353, 399, 456
Inoue, K., 69
Ishihara, A., 457
Ivanova, I., 284
Ivanova, S.Y., 384, 411
Ivanova, T., 426
Iwashita, Y., 69

J

Jacqmotte, N., 114
Jago, T.L., 69
Jahns, G.C., 63, 182, 209, 210, 466, 468, 496, 500, 510, 518, 528, 530
Jaquez, R., 500
Jennermann, C., 445
Jiang, L., 426
Johnson, C.F., 173, 430
Johnson, D.L., 69
Johnson, R.B., 314, 436, 437
Johnson, T.E., 430
Johnsson, A., 297, 429
Jones, J.B., 363, 394

K

Kabitskaya, O.E., 355, 371, 388
Kamiya, J., 350
Kann, R.P., 37, 40
Kaplansky, A.S., 353, 386, 396, 448, 456
Kariya, F., 403
Karlsson, C., 429
Katen, C., 162
Kawano, K., 69
Kazarians, G.A., 476
Keefe, R., 156
Keil, L.C., 384
Kellar, M.A., 447
Kimura, M., 405
Kirby, C.R., 75
Kiss, J., 224, 225
Kitajima, I., 69, 403, 458
Klimovitsky, V., 275
Kline, B., 343
Kohn, S.R., 345
Koike, H., 432
Konstantinova, I.V., 277, 364, 395, 450
Kordyum, E., 227
Korolkov, V.I., 278
Kosik, K., 231
Kostenuik, P.J., 443
Koubi, H., 390
Kozlovskaya, I., 281-283
Krasnov, I.B., 375, 376, 377, 407–409, 452, 460
Krikorian, A.D., 37, 40, 219, 244, 262, 264, 265, 267, 292, 351, 418, 419, 420, 434, 448
Krippendorf, B.B., 451
Kuang, A., 420, 421, 422
Kulesh, D.A., 306, 311, 436
Kunisada, T., 436

L

Lacy, P., 359
Lafage-Proust, M.H., 385, 454
Lambert, J.L., 326, 440
Landis, W.J., 305, 310, 435, 436
Lang, D.G., 425
Lange, R.D., 69, 363, 364, 453
Larkin, K., 114
Laurence, S., 402
Lavrova, E.A., 384
Leach, J., 227
LeBlanc, A., 273, 423
Lee, M., 338, 444
Lelkes, P., 238, 301
Lemaire, J., 145
Leon, H.A., 364
Leontovich, T.A., 378, 379, 452
Lesnyak, A.T., 277, 364, 395, 424, 456
Leterme, D., 457
Levine, H.G., 37, 40, 351, 419, 420
Levinskikh, M., 284, 426
Lewis, M., 214
Lewis, N., 222, 268, 421
Lewis, R.F., 502
Li, Y., 221, 226
Loginov, V.I., 353, 392
Lowry, O.H., 373, 377, 378, 379, 452
Lucid, S., 204
Luttges, M., 293

M

McCarron, D., 223
McDaniel, J.K., 417
McGarvie, L., 281
Macias, M.Y., 458
McNaughton, B., 231
Magedov, V., 275
Main-Ponset, L., 440
Mains, R.C., 24
Majeska, R., 222, 312
Makhanov, M.A., 378, 379
Malouvier, A., 435, 436
Mandel, A.D., 277
Marie, P.J., 389
Marini, J.-F., 400
Markin, A.A., 364, 365
Maruyama, I., 69, 403
Mashinsky, A., 284, 418, 427
Masseguin, C., 459
Mathieu-Costello, C., 383
Matthews, S.W., 420
Mehler, W.R., 374
Merrill, A.H., 365

Meshkov, D.O., 364
Meslin, J.C., 397, 456
Meylor, J., 63, 466, 468, 500, 510, 518, 528, 530
Miller, E.S., 294, 320, 336, 443
Miller, N., 350
Miller, T.Y., 93
Mironneau, C., 401
Mironneau, J., 401
Mogami, I., 432
Mohri, M., 105
Montufar-Solid, D., 427, 428, 480, 482
Moore, D., 15
Morel, J.L., 457
Morey-Holton, E.R., 127, 334, 340, 352–355, 387, 444, 448, 455
Morgan, T., 15
Morrison, D.R., 342
Mortimer, A., 335
Morton, D.S., 424
Mounier, Y., 402, 457
Moyer, J., 7
Mukku, V.R., 276
Munoz, K.A., 75
Murakami, D.M., 329, 441
Murasko, L.M., 371
Musgrave, M.E., 227, 246, 266, 269, 270, 420, 421, 422

N

Nachtman, R.G., 362, 393
Nagaoka, S., 69, 403
Nakamura, K., 432
Natochin, Y.V., 321, 384, 412
Navidi, M., 423
Nazarov, V.M., 353
Nechitailo, G.S., 284, 418
Nelson, G., 214, 289, 430, 431, 476
Neuilly, G., 401
Newkirk, D., 182
Nichols, D.H., 440
Nishimura, K., 432
Noikura, T., 69
Nowakowski, R., 231
Nugon-Baudon, I., 368, 397

O

Oberg, J., 15
O'Connor, S.A., 37
Oganov, V.S., 273, 355, 371, 388, 448, 451
Ohira, Y., 69–70, 403, 458
Ohnishi, T., 458
Orlova, T.G., 364

P

Paige, G.D., 283, 426
Parkman, K., 439
Parsell, D.E., 437
Partridge, N.C., 327
Patterson-Buckendahl, P., 423
Pechyonkina, R.A., 359, 366, 367
Pedrozo, H.A., 98
Pequignot, J.-M., 381
Perachio, A.A., 282
Peterson, B., 173
Phillips, R., 366, 367
Piastuch, W.C., 173, 227, 417, 418
Pickens, W.L., 318
Picquet, F.. 402
Pierotti, D.J., 279, 424
Plaut, K., 330, 441
Pletcher, D., 182, 210
Podolsky, I., 284
Poliakov, I.V., 452
Polyakov, I.V., 377
Pompeiano, O., 231
Popova, I.A., 353, 365, 396, 411, 450
Porterfield, D.M., 420, 422
Pozdnyakov, O.M., 399
Price, C.A., 437
Prietto, N., 69
Pronych, S.P., 114, 446
Pyle, B., 224

R

Rabot, S., 397
Rakhymanov, A., 273
Rakotoarisoa, L., 401
Raphan, T., 281
Ravisse, R., 368
Raymond, J., 231
Reiss-Bubenheim, D., 162
Renegar, R.H., 316, 437
Richards, G.F., 476
Riley, D.A., 213, 231, 371, 372, 404, 451, 452, 458
Roberts, E.W., 341, 354, 387
Rodan, G.A., 343
Rodionova, N.V., 388
Roffino, S., 457
Ronca, A.E., 317, 330, 437, 438, 441
Ross, M.D., 231, 349, 380, 410, 453, 460
Roy, R.R., 280
Rudolph, I.L., 430, 502
Rumbaugh, D., 252
Ryan, C.A., 421
Rykova, M.P., 364

S

Sack, F., 227
St. John, K.R., 314
Salada, T., 103, 445
Salisbury, F., 240, 284, 427, 496
Sams, C., 224, 225
Sauer, H.W., 263
Savage, P.D., 182, 209, 210, 500, 518, 524
Saveliev, S.V., 319, 438
Sawchenko, P.E., 375, 408, 409
Sayet, I., 457
Sayet-Colombet, L., 401

Schaefer, R., 182, 210, 431, 502
Schatten, H., 215
Schmidt, G.K., 494, 500
Schnepp, T., 162, 182, 209
Schott, J., 249
Schreibman, M., 229
Schubert, W.W., 289, 476
Seedor, J.G., 445
Sekiguchi, C., 403
Semba, I., 69
Sergutina, A.V., 374, 460
Serova, L., 315, 319, 321, 384, 412, 437, 438, 439, 454
Shackleford, L., 252, 273
Shakhmatova, E.I., 321, 384, 412
Shansky, J., 145
Shimizu, T., 231, 238, 302
Shinohara, S., 69
Silver, B., 422
Simski, S., 294
Singh-Cundy, A., 422
Sirota, M., 281, 282
Skidmore, M.G., 15, 202, 484, 486, 488, 490
Smirnov, K.V., 359, 366, 367, 449, 450
Snetkova, E.V., 384
Snyder, R.S., 98
Somody, L., 390
Somps, C.J., 426
Sonnenfeld, G., 277, 293, 294, 320, 364, 424, 438, 443
Souza, K.A., 114, 349, 447
Spangenberg, D.B., 290, 356, 431, 449
Spelsberg, T., 343
Staron, R.S., 446
Steele, C.R., 272
Stein, T.P., 278, 424
Stevens, L., 457
Steyger, P.S., 432
Stolarik, T.M., 494
Stout, C.S., 447
Strickland, K.M., 69
Stryjewski, E.C., 173
Stump, C.S., 75
Sullivan, K.A., 322
Sumarokov, D.D., 355
Sychev, V., 182, 210, 284, 427
Szylit, O., 368, 397, 450

T

Tabata, I., 458
Takasaki, I., 69
Takekura, H., 459
Tanaka, O., 405
Tanaka, T., 403
Tanner, S., 448
Tash, J., 224, 225
Taylor, G.R., 277, 438
Tharpar, K., 443
Thompson, J.L., 452
Tischler, M.E., 75, 216, 261, 333, 418, 442
Toma, C.D., 305
Tomko, D.L., 283, 426, 460
Toscano, W.B., 114, 350, 447, 470
Tripathy, B.C., 420
Tsao, A.K., 314
Tucci, M.A., 314
Turner, R.T., 222, 313, 340, 344, 346, 348, 445
Tuttle, R., 338

U

Uchida, H., 405
Udden, M.M., 362, 393, 450
Umnova, M.M., 460

V

Vailas, A.C., 354, 387, 444
Vale, W., 375, 408, 409
Vandenburgh, H., 145, 212, 218, 308, 435, 436
Vasques, M., 526
Vico, L., 385, 454
Viso, M., 390
Vordermark, D.S., 173

W

Wade, C.E., 444, 455
Wakley, M., 343
Walton, K., 231
Wassersug, R., 114, 332, 349, 442
Wentworth, A., 303
Wentworth, B., 238, 303
West, J.B., 383, 454
West, S., 273
Westerlind, K., 344, 346, 348, 444, 446
Wiederhold, M.L., 98, 229, 231, 291, 432, 433
Wilfinger, W.W., 343, 345, 347
Williams, D., 10
Wolgemuth, D., 222
Wong, A., 439
Woodman, C.R., 75
Wronski, T., 220

Y

Yamashita, H., 458
Yamashita, M., 433
Yamashita-Goto, K., 405
Yasui, W., 403
Yendler, B., 284, 496
Yoshioka, T., 405, 459

Z

Zamora, A.J., 400, 456
Zardiackas, L.D., 314
Zarow, G., 63, 466, 468, 500, 510, 518, 528, 530
Zerath, E., 389, 423, 455
Zhang, M., 348, 446
Zhu, X., 444
Zhuravleva, O.A., 365
Zimmerman, R., 217, 293, 294

p

REPORT DOCUMENTATION PAGE

Form Approved
OMB No. 0704-0188

Public reporting burden for this collection of information is estimated to average 1 hour per response, including the time for reviewing instructions, searching existing data sources, gathering and maintaining the data needed, and completing and reviewing the collection of information. Send comments regarding this burden estimate or any other aspect of this collection of information, including suggestions for reducing this burden, to Washington Headquarters Services, Directorate for information Operations and Reports, 1215 Jefferson 12, and to the Office of Management and Budget, Paperwork Reduction Project (0704-0188), Washington, DC 20503.

PB2001100139

2. REPORT DATE
August 2000

3. REPORT TYPE AND DATES COVERED
Special Publication

4. TITLE AND SUBTITLE
LIFE INTO SPACE, Space Life Sciences Experiments
Ames Research Center and Kennedy Space Center, 1991—1998

5. FUNDING NUMBERS
UPN 393-25

6. AUTHOR(S)
Edited by Kenneth Souza, Guy Etheridge, and Paul X. Callahan

7. PERFORMING ORGANIZATION NAME(S) AND ADDRESS(ES)
Ames Research Center
Moffett Field, CA 94035-1000 and
Langley Research Center, 100 NASA Road, Hampton, VA 23681-2199

8. PERFORMING ORGANIZATION REPORT NUMBER
A-9902710

9. SPONSORING/MONITORING AGENCY NAME(S) AND ADDRESS(ES)
National Aeronautics and Space Administration
Washington, DC 20546-0001

10. SPONSORING/MONITORING AGENCY REPORT NUMBER
NASA/SP—2000-534

11. SUPPLEMENTARY NOTES
Point of Contact: Life Sciences Division Office, Mail Stop 240-10, Ames Research Center, Moffett Field, CA 94035 (650) 604-5760

12a. DISTRIBUTION/AVAILABILITY STATEMENT
Unclassified — Unlimited
Subject Category 55 Distribution: Standard or Nonstandard
Availability: NASA CASI (301) 621-0390

12b. DISTRIBUTION CODE

13. ABSTRACT *(Maximum 200 words)*

Life into Space, 1991-1995 contains an overview of space life sciences missions, payloads, and experiments developed and/or managed by NASA's Ames Research Center and Kennedy Space Center. The contents include summaries of missions and payloads, research objectives, experiment development, mission operations, and science results. Also included are interviews covering various aspects of space life sciences research, a chapter profiling NASA's relevant international and domestic collaborative efforts, and a chapter discussing issues and challenges involved in flying living organisms in space. Three appendices describe, respectively, the methods and results of over 200 experiments, resulting science publications, and associated flight hardware with illustrations. Thorough subject and author indexes are provided. *Life into Space, 1991-1995*, a companion to *Life into Space, 1965-1990*, serves as a valuable resource to the scientists, engineers, and managers involved in space life sciences, as well as to educators and students from high school through graduate programs.

14. SUBJECT TERMS
Space biology, Gravitational biology, Life sciences

15. NUMBER OF PAGES

16. PRICE CODE

17. SECURITY CLASSIFICATION OF REPORT
Unclassified

18. SECURITY CLASSIFICATION OF THIS PAGE
Unclassified

19. SECURITY CLASSIFICATION OF ABSTRACT
Unclassified

20. LIMITATION OF ABSTRACT