SEP 7 1948 REC'D

RM No. SL8H17

Status: INACTIVE by authority T. T. Mill per memo. for E. B. Jackson dated 3/22/55.

PERMANENT FILE COPY

NACA

RESEARCH MEMORANDUM

for the

Air Materiel Command, U. S. Air Forces

THE INFLUENCE OF DIMENSIONAL MODIFICATIONS UPON THE SPIN AND RECOVERY CHARACTERISTICS OF A TAILLESS AIRPLANE MODEL HAVING ITS WINGS SWEPT FORWARD 15° (CORNELIUS XFG-1)

By

Ralph W. Stone, Jr., and Lee T. Daughtridge, Jr.

Langley Aeronautical Laboratory
Langley Field, Va.

TECHNICAL EDITING WAIVED

NATIONAL ADVISORY COMMITTEE FOR AERONAUTICS

WASHINGTON

SEP 1 1948

FILE COPY
[illegible]
Washington, D. C.

10

NATIONAL ADVISORY COMMITTEE FOR AERONAUTICS

RESEARCH MEMORANDUM

for the

Air Materiel Command, U. S. Air Force

THE INFLUENCE OF DIMENSIONAL MODIFICATIONS UPON THE SPIN AND RECOVERY CHARACTERISTICS OF A TAILLESS AIRPLANE MODEL HAVING ITS WINGS SWEPT FORWARD 15° (CORNELIUS XFG-1)

By Ralph W. Stone, Jr., and Lee T. Daughtridge, Jr.

SUMMARY

An investigation has been conducted in the Langley 20-foot free-spinning tunnel on a $\frac{1}{17.8}$-scale model of the Cornelius XFG-1 glider, a tailless design having its wings swept forward 15°. It was previously found to possess erratic spin and recovery characteristics, and tests were made to determine modifications which would lead to normal steady spins with consistently good recoveries.

The results of the investigation indicated that modifications that did not appreciably alter the basic design did not appreciably improve the spin and recovery characteristics. In this instance it appears that the sweptforward wing is the cause of unsatisfactory spin and recovery characteristics.

INTRODUCTION

Tests of models of the Cornelius XFG-1 glider have been made in the Langley 20-foot free-spinning tunnel and are reported in references 1 and 2. These results showed that the glider would spin erratically and that full reversal of the rudder followed by full reversal of the elevator would be necessary to stop the spin and to regain normal flight. Emphasis was made on the fact that care must be exercised by the pilot in order to avoid entering an inverted spin following recovery from the erect spin. Subsequent to the model tests, spin tests were made on the second full-scale Cornelius XFG-1 glider (the first glider having been lost during the initial full-scale spin tests. (See reference 2.) During spin tests of the second glider, the pilot was able to recover from a spin in one attempt, but in another attempt use of a spin-recovery parachute was necessary. The

pilot felt that because of the oscillatory nature of the spin, the sequence of control movements required for recovery was too critical and that recovery by control movement might not always be possible.

In view of the difficulties encountered with this design and because of general interest in tailless airplanes, Air Materiel Command, U. S. Air Forces, requested further tests of the Cornelius XFG-1 glider design in the Langley spin tunnel to determine modifications which would cause a normal steady spin with consistently good recoveries.

The present tests were performed with a model ballasted to simulate the loading of the second glider during its full-scale spin tests. During this investigation, determination was made of the effects of increased rudder deflections, of increased rudder chord, of installation of slats, spoilers, ventral fins, and horizontal tails of varying size and aspect ratio, of increased vertical-tail length, of wing fillets, and of changes in wing aspect ratio.

SYMBOLS

b	wing span, feet
S	wing area, square feet
$\bar{c}$	mean aerodynamic chord, feet
$x/\bar{c}$	ratio of distance of center of gravity rearward of leading edge of mean aerodynamic chord to mean aerodynamic chord
$z/\bar{c}$	ratio of distance between center of gravity and fuselage center line to mean aerodynamic chord (positive when center of gravity is below fuselage center line)
m	mass of glider, slugs
ρ	air density, slug per cubic foot
μ	relative density of airplane $\left(\frac{m}{\rho S b}\right)$
I_X, I_Y, I_Z	moments of inertia about X-, Y-, and Z-body axes, respectively, slug-feet^2
$\frac{I_X - I_Y}{mb^2}$	inertia yawing-moment parameter
$\frac{I_Y - I_Z}{mb^2}$	inertia rolling-moment parameter

$\frac{I_Z - I_X}{mb^2}$ inertia pitching-moment parameter

α angle between fuselage center line and vertical (approximately equal to absolute value of angle of attack at plane of symmetry), degrees

ϕ angle between span axis and horizontal, degrees

V full-scale true rate of descent, feet per second

Ω full-scale angular velocity about spin axis, revolutions per second

σ helix angle, angle between flight path and vertical, degrees

β approximate angle of sideslip at center of gravity, degrees (Sideslip is inward when the inner wing is down by an amount greater than the helix angle.)

APPARATUS AND METHODS

Model

A new $\frac{1}{17.8}$-scale model of the Cornelius XFG-1 glider was used for these tests. The model was built by the Langley Laboratory with provisions for dimensional modifications for the present investigation. A three-view drawing of the model is presented in figure 1. The dimensional characteristics of the full-scale glider are given in table I. Photographs of the model are shown in figure 2.

The model was ballasted with lead weights to obtain dynamic similarity to the glider at an altitude of 28,000 feet (ρ = 0.000957 slug per cubic foot). This rather high altitude was necessary in order to permit accurate ballasting of the model, which was built strongly and heavily to avoid frequent damage during testing. A remote-control mechanism was installed in the model to actuate the controls for recovery tests. Sufficient moments were exerted on the control surfaces during recovery tests to move the controls fully and rapidly.

Wind Tunnel and Testing Technique

The model tests were performed in the Langley 20-foot free-spinning tunnel, the operation of which is similar to that described in reference 3 for the Langley 15-foot free-spinning tunnel. The techniques used for

obtaining and converting data for the present free-spinning tests were the same as those used in references 1 and 2 and described in reference 3.

Spin-tunnel tests are made to determine the spin and recovery characteristics of the model for the normal-spinning-control configuration (elevator full up, aileron neutral, and rudder full with the spin) and at various other aileron-elevator control combinations, including zero and maximum deflections. Recovery is normally attempted by rapid, full rudder reversal, although, for the present investigation, some recoveries were also attempted by various combinations of simultaneous rudder and elevator movements. The criterion for a satisfactory recovery in the tunnel has been adopted as two turns or less by rudder reversal or a combination of rudder and elevator reversal. This value has been selected on the basis of spin-tunnel experience and on the basis of comparable full-scale spin-recovery data that are available.

Precision

The model test results presented herein are believed to be the true values given by the model within the following limits:

α, degree	± 1
ϕ, degree	± 1
V, percent	± 5
Ω, percent	± 2
Turns for recovery:	
From motion-picture records	$\pm\frac{1}{4}$
From visual observation	$\pm\frac{1}{4}$

The preceding limits may have been exceeded for the spins which were wandering or extremely oscillatory and, therefore, difficult to control in the tunnel.

Comparison between model spin and airplane spin results (references 3 and 4) indicates that spin-tunnel results are not always in complete agreement with airplane spin results. In general, the models spin at a somewhat smaller angle of attack, at a somewhat higher rate of descent, and at from 5° to 10° more outward sideslip than do the corresponding airplanes. The comparison made in reference 4 for 21 airplanes showed that approximately 80 percent of the models predicted satisfactorily the number of turns required for recovery from the spin for the corresponding airplanes and that approximately 10 percent overestimated and approximately 10 percent underestimated the number of turns required. It cannot be stated for certain whether or not this applies to such an unusual configuration as that of the Cornelius XFG-1 glider as the comparison mentioned above was made for conventional airplanes; however, existing full-scale results on

the Cornelius XFG-1 glider are in general agreement with spin-tunnel model results, especially with regard to the general oscillatory motion of the spin and the rates of descent and rotation.

Because it is impracticable to ballast the model exactly and because of inadvertent damage to the model during tests, the measured weight and mass distribution of the model varied from the true scaled-down values within the following limits:

Weight, percent . . . . . From 0 to 2 high
Center-of-gravity location, percent $\bar{c}$ . . . . . From 0 to 2 rearward
Moments of inertia:
I_X, percent . . . . . From 1 high to 9 high
I_Y, percent . . . . . From 2 low to 16 high
I_Z, percent . . . . . From 2 high to 16 high

The accuracy of measuring the weight and mass distribution is believed to be within the following limits:

Weight, percent . . . . . ±1
Center-of-gravity location, percent $\bar{c}$ . . . . . ±1
Moments of inertia, percent . . . . . ±5

Controls were set with an accuracy of $\pm 1^{\circ}$.

Test Conditions

A list of the conditions tested on the model is presented in table II, and sketches of the modifications used for the various conditions are presented in figures 3 to 14. For some of the conditions tested, the aspect ratio of the wing was changed. (See fig. 9.) This change was obtained by decreasing the span of the original wing.

All the tests except those with the decreased wing aspect ratios were performed with the model loaded to represent the second glider as it was loaded when flight-tested; this loading is subsequently referred to in this paper as the normal loading. For a few tests, the center of gravity was moved rearward from the normal position, and for other tests, the inertia yawing-moment parameter $\frac{I_X - I_Y}{mb^2}$ was increased positively. The loadings for the two cases in which the wing aspect ratio was decreased were arrived at by keeping the model wing loading constant and by decreasing the moments of inertia about all three body axes in proportion to the resulting decrease in weight; in each case the center of gravity was moved in order that it would remain at a constant percentage of the mean aerodynamic chord, which increases in length as the aspect ratio decreases. The mass characteristics and inertia parameters for the glider loading and

for all the loadings tested on the model are given in table III. The inertia parameters for the actual model loadings tested and for the full-scale glider loading are plotted in figure 15.

The maximum control deflections used in the tests were as follows:

Rudder, degrees . . . . . 25 right, 25 left
Elevator, degrees . . . . . 30 up, 20 down
Ailerons, degrees . . . . . 20 up, 15 down

Alternate and intermediate control deflections used were as follows:

Rudder, degrees . . . . . 45 right
Elevator, two-thirds down, degrees 14
Elevator, one-third down, degrees 7

RESULTS AND DISCUSSION

Before starting the regular test program, repeat spin tests of the model in the original XFG-1 configuration were made and the results are presented in chart 1. The results of tests of model conditions involving revisions which had little or slightly adverse effect on the spin and recovery characteristics are presented in table IV. Charts 2 to 5 present the results of model conditions in which the revisions tested improved the spin and recovery characteristics. All the tests are presented for spins to the pilot's right; however, check spins were made periodically to the pilot's left to insure that the model performed symmetrically and that the results presented were a true representation of expected full-scale results.

Original Condition

The results of tests with the model in the original configuration (chart 1) are in general agreement with the results for corresponding conditions reported in references 1 and 2. In general, the model spun in a flat stalled attitude and was oscillatory about all three axes. The rotation about the vertical axis was stopped by rudder reversal, but when the elevators were up or neutral the model usually remained in a stalled glide after the rotation had ceased. Recovery tests made by movement of both the rudder and the elevators showed that movement of the elevators to full down made the model dive from its normally flat stalled attitude. Figure 16 is a reproduction of a motion picture of a spin of the model in the original condition at the normal control configuration for spinning (stick full back and laterally neutral, and rudder full with the spin).

The oscillations obtained on the model are similar to those reported for conventional type airplanes in reference 5. Reference 5 indicates,

however, that changes in mass distribution such as to increase positively or decrease negatively the value of inertia yawing-moment parameter lead to steady spins or at least less violent conditions. Variations in mass distribution on the XFG-1 design (table IV and reference 1) did not influence the oscillations obtained and it is believed therefore that the oscillations are the result of the swept-forward tailless configuration rather than the distribution of mass or of side area as indicated for conventional airplanes in reference 5.

The pilot's report of the spin tests of the second XFG-1 glider substantiated the general characteristics of the spin as obtained on the spin-tunnel model. As previously indicated, however, he felt that the necessary control movements required for recovery were too critical and that recovery may not always be possible. It may have been that, because of the oscillatory motion, the pilot found it difficult to properly orient himself to make the proper control movements. Also because of the violence of the oscillatory motion, the glider may have entered an inverted condition during recovery so rapidly that the pilot was not aware that the glider had passed through the unstalled region. Danger of rapidly entering such an inverted condition is indicated by the results of chart 1 and warning of this danger was made in references 1 and 2.

The results of numerous revisions made to the model in its original condition which had negligible or adverse effects on the spin and recovery characteristics of the model are presented in table IV(a). In order to expedite the test program, many of the revisions presented in table IV which did not appear very promising were not tested completely. The tests were made for various representative control configurations and the results so obtained were considered an indication of the degree of effectiveness of the revision. These results are not discussed in detail but are presented as an indication of the variety of modifications considered and as an indication of the difficulty of making the XFG-1 configuration satisfactory as regards normal steady spins with consistently good recoveries.

Increased Vertical-Tail Length

Consideration of the problem indicated that possible improvement of the spin and recovery characteristics of the XFG-1 design could be obtained if the vertical tail and rudder were more exposed in spinning attitudes. In order to unshield the rudder from the wake of the wing, the vertical tail was moved rearward, a distance equal to one-half the mean aerodynamic chord. (See fig. 10.) The results of tests with the vertical tail in this position are presented in chart 2. Comparison of the results in chart 2 with those in chart 1 showed some improvement in that there appeared to be more of a tendency for the model to spin at somewhat steeper average attitudes. The violence of the oscillations were, however, nearly as great as for the original condition and the down movement of the elevators for regaining unstalled flight was still necessary. Figure 17 is a reproduction

of a motion picture of a spin of the model with increased vertical-tail length for the normal control configuration for spinning (rudder full with the spin, ailerons neutral, and elevators full up).

The results of tests of several other revisions to the model, with the vertical tail in its rearward position, which had little or no additional effect on the spin and recovery characteristics of the model, are presented in table IV(b).

Installation of Horizontal Fins and Strips

Results of the tests presented in table IV(b) indicated that installation of horizontal fins and strips had a small favorable effect upon the spin and recovery characteristics and, accordingly, these modifications were tested in combination with increased tail length. The results of these tests are presented in charts 3 and 4 for two center-of-gravity positions and indicate a definite trend for the spins to be at a steeper average angle of attack than were those for the model without these revisions. The spins, however, were still oscillatory as were those for the unrevised model. Figure 18 is a reproduction of a motion picture of a spin of the model in this condition for the normal control configurations for spinning. The results of recovery tests showed a definite improvement in the required recovery procedure in that it was necessary only to neutralize the rudder and to move the stick to only two-thirds forward to obtain satisfactory recoveries. The dangers coincident with the necessary control movements for the unrevised design are in part avoided in that merely neutralizing the rudder will not be conducive to starting the inverted spins warned against, and movement of the stick to only two-thirds forward will not cause the airplane to go into an inverted attitude as readily. It is believed, however, that some of the difficulties encountered in full-scale spins for the original design may still be encountered primarily because of the oscillations which persist even with these revisions. A comparison of the results of charts 3 and 4 indicate only little effect of rearward center-of-gravity movement on the spin and recovery characteristics.

Comparison with Sweptback Tailless Designs and Effect of Adding a Horizontal Tail

Inasmuch as none of the modifications investigated was effective in eliminating the oscillatory spinning characteristics, a comparison was made with results of spin-tunnel tests of sweptback tailless configurations and the effect of adding a horizontal tail was investigated. The comparison with the spin characteristics of models of several sweptback tailless designs indicated that none had the oscillatory spinning characteristics of the sweptforward XFG-1 design. For one design having its wing swept

back 35° and having unshielded vertical fin and rudder area, steady spin and satisfactory recoveries were obtained. It appears, therefore, that the difficulty encountered in the present investigation may be attributable to the forward sweep of the wings. Tests with a horizontal tail installed (chart 5), however, indicate that with such an installation normal steady spins and satisfactory recoveries can be obtained. It appears, therefore, that the unsatisfactory oscillatory spinning characteristics of the XFG-1 design are the result of the sweptforward and tailless combination.

CONCLUSIONS

Based on the results of tests of a $\frac{1}{17.8}$-scale model of a tailless design having its wings swept forward (Cornelius XFG-1 glider), the following conclusions regarding the spin and recovery characteristics of the airplane are made:

1. Revisions which do not appreciably alter the basic design will not appreciably improve the spin and recovery characteristics of the airplane.

2. In this instance it appears that the sweptforward wing is the cause of unsatisfactory spin and recovery characteristics.

Langley Aeronautical Laboratory
National Advisory Committee for Aeronautics
Langley Field, Va.

Ralph W. Stone Jr.
Ralph W. Stone, Jr.
Aeronautical Research Scientist

Lee T. Daughtridge Jr. per R.W.S.
Lee T. Daughtridge, Jr.
Aeronautical Engineer

Approved: Thomas A. Harris
Thomas A. Harris
Chief of Stability Research Division

RCM

REFERENCES

1. Stone, Ralph W., Jr., and Daughtridge, Lee T., Jr.: Free-Spinning, Longitudinal-Trim, and Tumbling Tests of $\frac{1}{17.8}$-Scale Models of the Cornelius XFG-1 Glider. NACA MR No. L5K21, 1945.

2. Stone, Ralph W., Jr., and Daughtridge, Lee T., Jr.: Elevator and Rudder Forces Required for Recovery from Spins of the Cornelius XFG-1 Glider, and Supplementary Spin Tests of a $\frac{1}{17.8}$-Scale Model. NACA MR No. L6D30, Army Air Forces, 1946.

3. Zimmerman, C. H.: Preliminary Tests in the N.A.C.A. Free-Spinning Wind Tunnel. NACA Rep. No. 557, 1936.

4. Seidman, Oscar, and Neihouse, A. I.: Comparison of Free-Spinning Wind-Tunnel Results with Corresponding Full-Scale Spin Results. NACA MR, Dec. 7, 1938.

5. Stone, Ralph W., Jr. and Klinar, Walter J.: The Influence of Very Heavy Fuselage Mass Loadings and Long Nose Lengths upon Oscillations in the Spin. NACA TN No. 1510, 1948.

TABLE I.- DIMENSIONAL CHARACTERISTICS OF THE CORNELIUS XFG-1 GLIDER

Wing span, ft	54
Length over all, ft	29.4
Wing:	
Area, sq ft	356
Incidence, deg	
Root	0
Tip	1.5
Aspect ratio	8.2
Dihedral along quarter-chord line, deg	2
Sweepforward at quarter-chord line, deg	15
Mean aerodynamic chord, in.	85.82
Ailerons:	
Area (rearward of hinge line), sq ft	31.6
Span, in.	171.25
Chord (rearward of hinge line), percent wing chord	20
Elevator:	
Area (rearward of hinge line), sq ft	36.4
Span, in.	107
Chord (rearward of hinge line), percent wing chord	25
Vertical tail:	
Area, sq ft	43.5
Span (from center line of glider), in.	125
Rudder area, sq ft	19.4

NACA

TABLE II.- CONDITIONS TESTED ON THE $\frac{1}{17.8}$-SCALE MODEL OF THE CORNELIUS XFG-1 GLIDER

Number	Loading	Modifications	Data on		Figure
			Chart	Table	
		Original vertical tail			
1	Normal	None	1		
2	Normal	Alternate rudder deflection	---	IV	---
3	Normal	50-percent-rudder-chord increase	---	IV	3
4	Normal	Sharp-leading-edge wing	---	IV	---
5	Normal	Wing-tip extension with negative dihedral	---	IV	4
6	Normal	Ventral fin	---	IV	5
7	Normal	Horizontal fins A	---	IV	6
8	Normal	Horizontal fins B	---	IV	6
9	Normal	Horizontal fins C	---	IV	6
10	Normal	Horizontal fins D	---	IV	6
11	Normal	Horizontal fins E	---	IV	6
12	Normal	Horizontal fins F	---	IV	6
13	Normal	Horizontal fins G	---	IV	6
14	Normal	Spoilers A	---	IV	7
15	Normal	Spoilers B	---	IV	7
16	Normal	Spoilers C	---	IV	7
17	Normal	Spoilers D	---	IV	7
18	Normal	Spoilers E	---	IV	7
19	Normal	Slats A	---	IV	8
20	Normal	Slats B	---	IV	8
21	Normal	Slats C	---	IV	8
22	Normal	Slat B - inboard wing	---	IV	8
23	Normal	Slat C - inboard wing	---	IV	8
24	Normal	Wing A (aspect ratio 5.67)	---	IV	9
25	Normal	Wing B (aspect ratio 3.58)	---	IV	9
26	Normal	Wing A - squared wing tips	---	IV	9
27	Normal	Wing A - slat B	---	IV	8, 9

NACA

TABLE II.- CONDITIONS TESTED ON THE $\frac{1}{17.8}$-SCALE MODEL OF THE CORNELIUS XFG-1 GLIDER - Concluded

Number	Loading	Modifications	Data on		Figure
			Chart	Table	
Original vertical tail					
28	Normal	Wing A - slat C - outboard wing	---	IV	8, 9
29	Normal	Wing A - squared wing tips - slat B	---	IV	8, 9
30	Normal	Wing A - slat B - on inboard wing	---	IV	8, 9
31	Normal	Wing B - decreased fuselage length	---	IV	9
32	Normal	Wing B - slat A	---	IV	8, 9
33	Normal	Wing B - slat A - inboard wing	---	IV	8, 9
34	Normal	Wing B - squared tips - slat A	---	IV	8, 9
35	Normal	Wing B - squared tips - slat A - inboard wing	---	IV	8, 9
Increased vertical-tail length					
36	Normal	None	2	---	10
37	I_X and I_Z increased 159 percent I_X	None	---	IV	10
38	I_X and I_Z increased 319 percent I_X	None	---	IV	10
39	Normal	Wing fillets A	---	IV	10, 11
40	Normal	Wing fillets B	---	IV	10, 11
41	Normal	Wing fillets C	---	IV	10, 11
42	Normal	Horizontal strips A	---	IV	10, 12
43	Normal	Horizontal strips B	---	IV	10, 12
44	Normal	Horizontal strips C	---	IV	10, 12
45	Normal	Horizontal fins A	---	IV	10, 13
46	Normal	Horizontal fins B	---	IV	10, 13
47	Normal	Horizontal fins B - horizontal strips C	3	---	10, 12, 13
48	C.g., 5 percent $\bar{c}$ rearward	Horizontal fins B - horizontal strips C	4	---	10, 12, 13
49	Normal	Horizontal fins C	---	IV	10, 13
50	Normal	Horizontal fins D	---	IV	10, 13
51	Normal	Horizontal tail A	5	---	10, 14

NACA

TABLE III.- MASS CHARACTERISTICS AND INERTIA PARAMETERS FOR THE LOADING OF THE CORNELIUS XFG-1 GLIDER AND FOR LOADINGS TESTED ON THE MODEL

[Model values converted to corresponding full-scale values and moments of inertia are given about the center of gravity]

Condition	Weight (lb)	Center-of-gravity location		Relative airplane density μ		Moments of inertia (slug-feet^2)			Mass parameters		
		$x/\bar{c}$	$z/\bar{c}$	Sea level	Altitude of 28,000 feet	I_X	I_Y	I_Z	$\frac{I_X - I_Y}{mb^2}$	$\frac{I_Y - I_Z}{mb^2}$	$\frac{I_Z - I_X}{mb^2}$
Glider values											
Normal loading	4542	0.20	0.02	3.09	7.67	4805	4510	8600	7.2×10^{-4}	-99.5×10^{-4}	92.3×10^{-4}
Model values											
Normal loading, original tail	4561	0.20	0.02	3.10	7.70	4870	4427	8801	10.7×10^{-4}	-105.9×10^{-4}	95.2×10^{-4}
Normal loading, aspect ratio 5.67	3814	0.17	0.02	4.05	10.07	4043	3839	7258	10.2	-171	160.8
Normal loading, aspect ratio 3.58	2913	0.19	0.02	6.13	15.24	2699	3210	5347	-71.5	-298.9	370.4
Normal loading, lengthened tail	4530	0.20	0.02	3.08	7.65	4831	4483	8694	8.5	-102.6	94.1
C.g., 5 percent $\bar{c}$ rearward lengthened tail	4530	0.25	0.02	3.08	7.66	4829	4542	8754	7.0	-102.4	95.6
I_X and I_Z increased 159 percent I_X, lengthened tail	5030	0.20	0.02	3.42	8.49	12,526	4483	16,389	176.6	-261.4	84.8
I_X and I_Z increased 319 percent I_X, lengthened tail	5531	0.20	0.02	3.76	9.34	20,221	4483	24,083	314.1	-391.2	77.1

TABLE IV.- EFFECT OF REVISIONS ON THE SPIN AND RECOVERY CHARACTERISTICS OF A $\frac{1}{17.8}$-SCALE MODEL OF THE CORNELIUS XFG-1 GLIDER

[Model condition and loading as indicated; model was launched with spinning rotation to the right; rudder full with the spin; recovery attempted by rudder reversal except as indicated]

Condition number (a)	Model condition		Recovery for aileron position indicated			Remarks
	Revision or combination of revision	Elevator position	Full against	Neutral	Full with	
(a) Original vertical-tail length						
2	Alternate rudder deflections (45° with the spin to 25° against the spin for recovery)	Up	$\frac{1}{2}$, $\frac{1}{2}$	$\frac{1}{2}$, $\frac{1}{2}$		Motion obtained similar to that of unrevised model (chart 1)
		Neutral		$\frac{1}{4}$, $\frac{1}{2}$	$\frac{1}{2}$	
		Down		$\frac{1}{4}$, $\frac{3}{4}$		
3	50-percent-rudder-chord increase	Up	$\frac{1}{4}$, $\frac{1}{4}$	$\frac{1}{4}$, $\frac{1}{4}$		Do.
		Neutral		$\frac{1}{2}$, $\frac{1}{2}$		
4	Sharp-leading-edge wing	Up	(b), (c)	$1\frac{1}{2}$	$\frac{1}{4}$	Do.
		Neutral	(b), (c)	$\frac{3}{4}$	$\frac{1}{4}$, 1	
		Down	(b), (c)	1, $1\frac{1}{2}$	$\frac{1}{2}$	
5	Wing-tip extensions, with negative dihedral	Up	(b)	(b)		Do.
6	Ventral fin	Up		$\frac{1}{4}$, $\frac{1}{4}$		Do.
		Neutral		$\frac{1}{4}$, $\frac{1}{4}$		
7	Horizontal fins A	Up		[d]$\frac{3}{4}$		Do.
		Down		---		
8	Horizontal fins B	Up		---		Do.
9	Horizontal fins C	Up		---		Do.
10	Horizontal fins D	Up		---		Do.
11	Horizontal fins E	Up		>1, [e]>4		Motion obtained similar but somewhat steeper than that of unrevised model (chart 1)
		Down		[e]>3		
12	Horizontal fins F	Up		---		Motion obtained similar to that of unrevised model (chart 1)

[a]Condition numbers refer to condition numbers of table II.
[b]Violently oscillatory.
[c]Model goes inverted during oscillations.
[d]Recovery attempted by simultaneous neutralization of rudder and elevator.
[e]Visual estimate.

TABLE IV.- EFFECT OF REVISIONS ON THE SPIN AND RECOVERY CHARACTERISTICS OF A $\frac{1}{17.8}$ SCALE MODEL OF THE CORNELIUS XFG-1 GLIDER - Continued

Condition number (a)	Model condition		Recovery for aileron position indicated			Remarks
	Revision or combination of revisions	Elevator position	Full against	Neutral	Full with	
(a) Original vertical-tail length						
13	Horizontal fins G	Up		---		Motion obtained similar to that of unrevised model (chart 1)
14	Spoilers A	Up	[e]$\frac{1}{4}$ to [e]$\frac{1}{2}$	[e]$\frac{1}{4}$ to $\frac{1}{2}$	---	Do.
		Down		---		
15	Spoilers B	Up	---	---		Do.
16	Spoilers C	Up	---	---		Do.
17	Spoilers D	Up		---		Do.
		Down		---		
18	Spoilers E	Up		---		Motion obtained similar to that of unrevised model except rotation about spin axis is stopped without control movement.
19	Slats A	Up		>5		Motion obtained flatter (with adverse effect on recoveries) than that of unrevised model
		Neutral		>6		
20	Slats B	Up	$1\frac{1}{2}$	$\frac{1}{2}$, $\frac{1}{2}$		Motion obtained similar to that of unrevised model (chart 1)
		Neutral		$\frac{1}{2}$, $\frac{3}{4}$		
21	Slats C	Up	---	∞	$\frac{1}{4}$, $\frac{1}{2}$	Motion obtained flatter (with adverse effect on recoveries) than that of unrevised model
		Neutral		>4		
		Down		>4		
22	Slat B - inboard wing	Up	$\frac{1}{4}$, $\frac{1}{4}$	---	---	Motion obtained similar to that of unrevised model (chart 1)
		Neutral		---		
23	Slat C - inboard wing	Up	$\frac{1}{4}$, $\frac{1}{4}$	---	---	Do.
		Neutral		---		
24	Wing A	Up	$\frac{1}{2}$	$\frac{1}{4}$	$\frac{1}{4}$	Motion obtained similar to that of unrevised model except oscillations more violent
		Neutral	---	$\frac{3}{4}$	$\frac{1}{2}$	
		Down	---	$\frac{3}{4}$, $\frac{3}{4}$	$\frac{1}{4}$	

[a]Condition numbers refer to condition numbers of table II.
[e]Visual estimate.

TABLE IV.- EFFECT OF REVISIONS ON THE SPIN AND RECOVERY CHARACTERISTICS OF A $\frac{1}{17.8}$-SCALE MODEL OF THE CORNELIUS XFG-1 GLIDER - Continued

Condition number (a)	Model condition		Recovery for aileron position indicated			Remarks
	Revision or combination of revisions	Elevator position	Full against	Neutral	Full with	
(a) Original vertical-tail length						
25	Wing B	Up		$\frac{1}{4}, \frac{1}{4}$		Motion obtained similar to that of unrevised model (chart 1)
		Neutral		$\frac{1}{2}, \frac{1}{2}$		
26	Wing A - squared wing tips	Up		---		Do.
		Down		---		
27	Wing A - slat B	Up	$\frac{3}{4}$	[e]$\frac{1}{4}$		Do.
		Neutral		$\frac{3}{4}, 1, >1$		
28	Wing A - slat C - outboard wing	Up	$2\frac{1}{4}$	$>4\frac{1}{2}$	$>2\frac{1}{2}$	Motion obtained flatter (with adverse effect on recoveries) than that of unrevised model
		Neutral		>4		
		Down		$>3\frac{3}{4}$		
29	Wing A - squared wing tips - slat B	Up	$2, 2\frac{1}{2}$	$\frac{1}{2}, \frac{1}{2}$	$\frac{1}{4}$	Motion obtained similar but somewhat steeper than that of unrevised model (chart 1)
		Neutral	>5	$2, >1\frac{3}{4}$	$\frac{1}{4}, \frac{3}{4}$	
		Down	$1, 1\frac{3}{4}$	$\frac{1}{4}, \frac{3}{4}$	1	
30	Wing A - slat B - inboard wing	Up	---	---	$\frac{1}{4}$	Motion obtained similar to that of unrevised model (chart 1)
		Neutral		$\frac{1}{4}$		
		Down		---		
31	Wing B - decreased fuselage length	Up		---		Motion obtained similar but somewhat steeper than that of unrevised model (chart 1)
		Neutral		---		
32	Wing B - slat A	Up		$\frac{1}{4}$		Motion obtained similar to that of unrevised model (chart 1)
33	Wing B - slat A - inboard wing	Up		---		Do.
		Neutral		---		
34	Wing B - squared tips - slat A	Up		---		Do.
		Neutral		---		
35	Wing B - squared tips - slat A - inboard wing	Up		---		Do.
		Neutral		---		

[a]Condition numbers refer to condition numbers of table II.
[e]Visual estimate.

TABLE IV.- EFFECT OF REVISIONS ON THE SPIN AND RECOVERY CHARACTERISTICS OF A $\frac{1}{17.8}$-SCALE MODEL OF THE CORNELIUS XFG-1 GLIDER - Concluded

Condition number (a)	Model condition		Recovery for aileron position indicated			Remarks
	Revision or combination of revisions	Elevator position	Full against	Neutral	Full with	
(b) Increased vertical-tail length						
37	I_X and I_Z increased 159 percent I_X	Up		---		Motion obtained similar to that of unrevised model (chart 2)
38	I_X and I_Z increased 319 percent I_X	Up		$\frac{1}{2}, \frac{3}{4}$		Do.
39	Wing fillets A	Up		$\frac{1}{2}$		Do.
40	Wing fillets B	Up		$\frac{1}{4}, \frac{1}{4}$		Do.
41	Wing fillets C	Up		$\frac{1}{4}, \frac{1}{4}$		Do.
42	Horizontal strips A	Up		$\frac{1}{4}, \frac{1}{4}$		Do.
43	Horizontal strips B	Up		$\frac{1}{4}, \frac{1}{4}$		Spins obtained, steeper and steadier than those of unrevised model; stalled glide persisted following recovery
		Neutral		$^{e}\frac{1}{2}, ^{e}\frac{1}{2}$		
44	Horizontal strips C	Up	$^{f}\frac{3}{4}, ^{d}>2$	$\frac{1}{4}, ^{f}\frac{1}{4}, ^{d}>1$	$^{f}\frac{3}{4}, ^{f}>1$	Motion obtained similar to that of unrevised model (chart 2)
		Neutral		$\frac{1}{2}, \frac{1}{2}$		
45	Horizontal fins A	Up	$^{d}\frac{1}{2}$	$\frac{1}{4}, \frac{1}{4}$		Do.
46	Horizontal fins B	Up		$\frac{1}{4}, ^{d}\frac{1}{4}$		Do.
49	Horizontal fins C	Up		$\frac{1}{4}, \frac{1}{4}$		Do.
		Neutral		$\frac{1}{2}$		
50	Horizontal fins D	Up		$\frac{1}{4}$		Spins obtained, steeper and steadier than those of unrevised model; stalled glide persisted following recovery

[a]Condition numbers refer to condition numbers of table II.
[e]Visual estimate.
[f]Recovery attempted by reversing the rudder full against and the elevators to neutral.

CHART 1.- SPIN AND RECOVERY CHARACTERISTICS OF A $\frac{1}{17.8}$-SCALE MODEL OF THE CORNELIUS XFG-1 GLIDER IN THE ORIGINAL CONFIGURATION

[Normal loading; model was launched with spinning rotation to the right; rudder full with the spin; recovery from the ensuing motion was attempted as indicated]

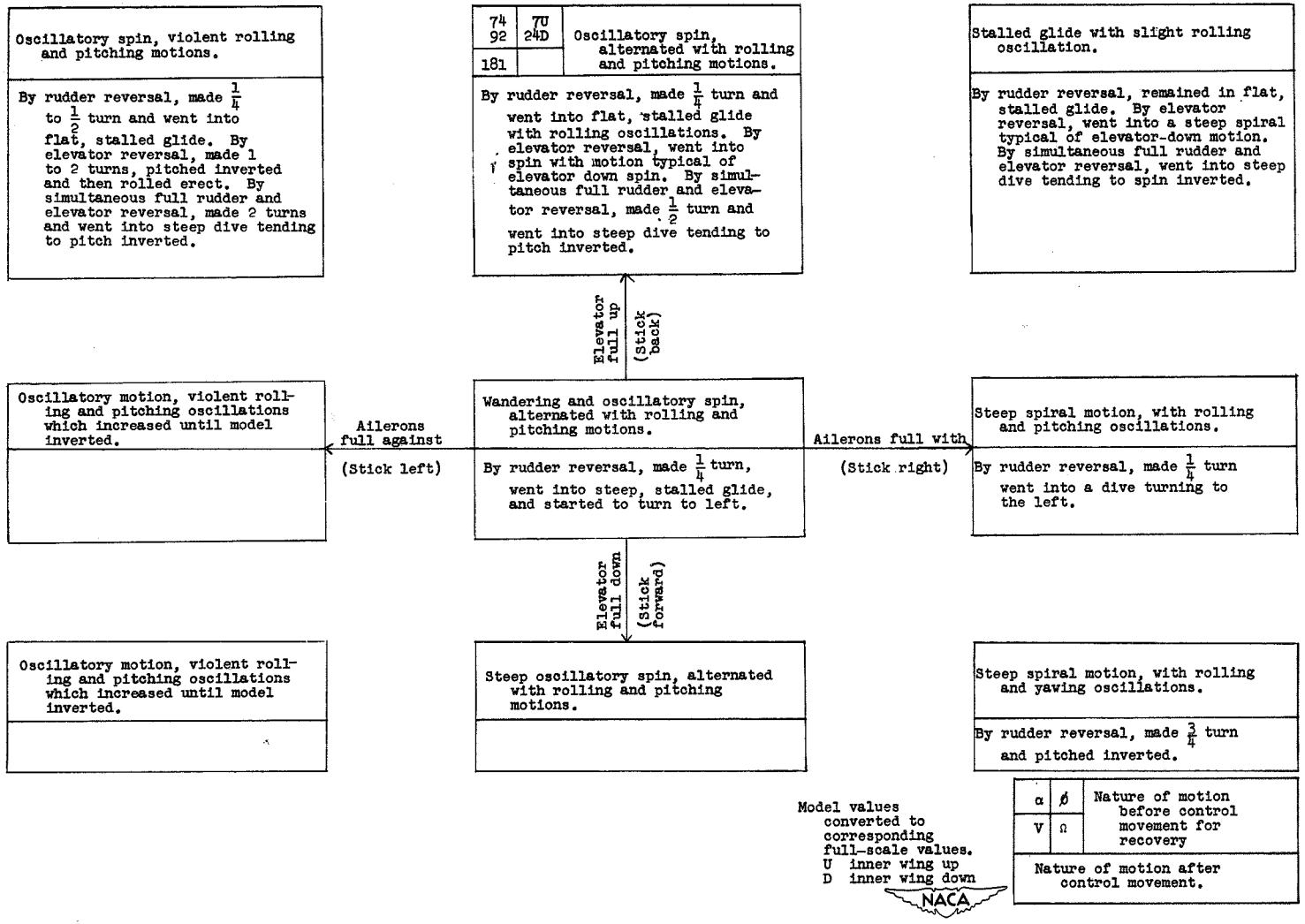

CHART 2.- SPIN AND RECOVERY CHARACTERISTICS OF A $\frac{1}{17.8}$-SCALE MODEL OF THE CORNELIUS XFG-1 GLIDER WITH INCREASED VERTICAL TAIL LENGTH

[Normal loading; model was launched with spinning rotation to the right, rudder full with the spin; recovery from the ensuing motion was attempted as indicated]

22 114	56U 43D	Oscillatory spin with alternate rolling and pitching motions.
175	0.20	

By rudder reversal, made $\frac{1}{2}$ turn and dived steeply, then pulled up into a flat attitude, turning to the left. By simultaneous full rudder and elevator reversal, made $\frac{1}{2}$ turn and went into a steep dive and pitched into an inverted spin. By simultaneous neutralization of rudder and elevator, made from $\frac{1}{2}$ to $1\frac{1}{4}$ turns and went into a steep dive and pitched inverted. By simultaneous neutralization of rudder and reversal of elevator to full down, made $\frac{1}{4}$ to 1 turn and went into a dive.

52 77	7U 23U	Oscillatory spin with rolling motion.
170	0.17	

By rudder reversal, made $\frac{1}{4}$ turn and went into flat, stalled glide. By simultaneous full rudder and elevator reversal, made $\frac{1}{4}$ turn and went into an inverted spin. By simultaneous neutralization of rudder and elevator, made $\frac{3}{4}$ turn and went in a dive or continued to spin for more than $2\frac{1}{2}$ turns. By simultaneous neutralization of rudder and reversal of elevator to full down, made $\frac{1}{4}$ to $\frac{1}{2}$ turn and went into a steep dive with tendency to pitch inverted.

45 86	2U 27D	Oscillatory spin with rolling motion.
170	0.19	

By rudder reversal, made $\frac{1}{4}$ turn and went into a flat, stalled glide. By simultaneous full reversal of rudder and elevator, made $\frac{1}{4}$ turn and went into a dive and pitched into an inverted spin. By simultaneous neutralization of rudder and elevator, made $1\frac{1}{4}$ turn and went into a flat, stalled glide. By simultaneous neutralization of rudder and reversal of elevator to full down, made $\frac{1}{4}$ turn and pitched into a stalled, inverted glide.

Elevator full up (Stick back)

Oscillatory motion with violent rolling oscillations for about 12 turns and then went into a dive.

Ailerons full against (Stick left)

37 76	21U 24D	Steep wandering and oscillatory spin, alternated with rolling and pitching motions.
170	0.23	

By rudder reversal, made $\frac{1}{4}$ turn and went into a dive.

Ailerons full with (Stick right)

Wandering spin with yawing oscillations.

By rudder reversal, made $\frac{1}{2}$ turn and went into a dive.

Elevator full down (Stick forward)

Oscillatory motion with alternate rolling and pitching oscillations which increased until model went into a steep dive and pitched inverted.

Steep wandering spin with rolling oscillations.

By rudder reversal, made from $\frac{1}{4}$ to $\frac{1}{2}$ turn and went into a steep dive and pitched inverted.

Wandering spin with yawing oscillations.

By rudder reversal, made $\frac{1}{4}$ turn and went into a dive.

Model values converted to corresponding full-scale values.
U inner wing up
D inner wing down

α	ϕ	Nature of motion before control movement for recovery.
V	Ω	

Nature of motion after control movement.

NACA

CHART 3.– SPIN AND RECOVERY CHARACTERISTICS OF A $\frac{1}{17.8}$-SCALE MODEL OF THE CORNELIUS XFG-1 GLIDER WITH INCREASED VERTICAL-TAIL LENGTH, HORIZONTAL FINS AND HORIZONTAL STRIPS

[Normal loading; model was launched with spinning rotation to the right, rudder full with the spin; recovery from the ensuing motion was attempted as indicated]

Two types of spin

47 65	7U 8D	Wide radius spin	67 87	6D 41D	Oscillatory spin
169	0.14		172	0.20	
By rudder reversal, made $\frac{1}{4}$ turn and went into a flat, stalled glide. By simultaneous neutralization of rudder and reversal of elevator to full down, made $\frac{1}{2}$ turn and went into a steep dive and pitched inverted.			By rudder reversal, made $\frac{1}{4}$ turn and went into a flat, stalled glide. By simultaneous neutralization of rudder and reversal of elevator to full down, made $\frac{1}{4}$ to $\frac{3}{4}$ turn and went into a steep dive and pitched inverted. By simultaneous neutralization of rudder and reversal of elevator to $\frac{2}{3}$ down, made $\frac{1}{4}$ to 1 turn and went into a steep dive. By simultaneous neutralization of rudder and reversal of elevator $\frac{1}{3}$ down, made $\frac{1}{4}$ to $\frac{1}{2}$ turn and went into a steep dive and pitched inverted.		

44 64	12U 21D	Wide radius spin with rolling oscillations.
178	0.15	
By rudder reversal, made $\frac{1}{4}$ turn and went into a flat, stalled glide. By simultaneous neutralization of rudder and reversal of elevator to full down, made $\frac{1}{4}$ to 1 turn and went into a steep dive and pitched inverted. By simultaneous neutralization of rudder and reversal of elevator to $\frac{2}{3}$ down, made $\frac{1}{4}$ to $\frac{1}{2}$ turn and went into a steep dive. By simultaneous neutralization of rudder and reversal of elevator to $\frac{1}{3}$ down, either made from $\frac{1}{4}$ to $1\frac{1}{4}$ turn and went into a flat, stalled glide or didn't recover in 2 turns.		

25 81	6U 33D	Oscillatory spin with violent pitching and rolling motions.
175	0.17	
By rudder reversal, made $\frac{1}{4}$ turn and went into a flat, stalled glide. By simultaneous neutralization of rudder and reversal of elevator to full down, made $\frac{1}{2}$ to $\frac{3}{4}$ turn and went into a steep dive.		

Elevator full up (Stick back)

Elevator neutral

Ailerons neutral

Ailerons full against (Stick left)

36 55	2D 14D	Oscillatory spin
178	0.25	
By rudder reversal, made $\frac{1}{4}$ turn (visual observation) and went into a dive.		

Ailerons full with (Stick right)

Model values converted to corresponding full-scale values.
U inner wing up
D inner wing down

α	ϕ	Nature of motion before control movement for recovery.
V	-Ω	
Nature of motion after control movement.		

CHART 4.– SPIN AND RECOVERY CHARACTERISTICS OF THE $\frac{1}{17.8}$-SCALE MODEL OF THE CORNELIUS XFG-1 GLIDER WITH INCREASED VERTICAL-TAIL LENGTH, HORIZONTAL FINS, AND HORIZONTAL STRIPS AND WITH THE CENTER OF GRAVITY MOVED REARWARD

[Center of gravity moved 5 percent mean aerodynamic chord rearward of normal; model was launched with spinning rotation to the right, rudder full with the spin; recovery from the ensuing motion was attempted as indicated]

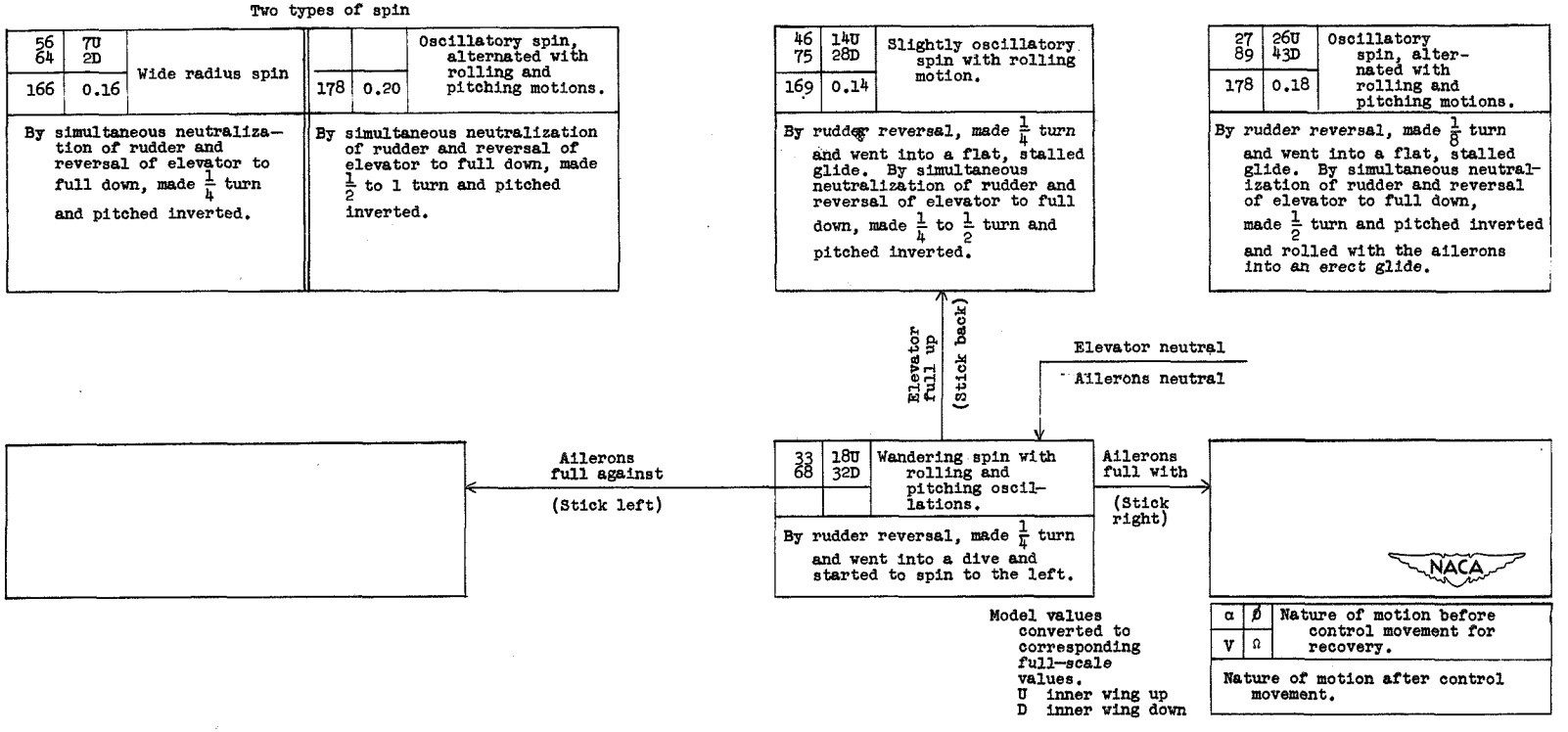

CHART 5.- SPIN AND RECOVERY CHARACTERISTICS OF A $\frac{1}{17.8}$-SCALE MODEL OF THE CORNELIUS-XFG 1 GLIDER WITH INCREASED VERTICAL-TAIL LENGTH AND A HORIZONTAL TAIL

[Normal loading; model was launched with spinning rotation to the right; rudder full with the spin; recovery from the ensuing motion was attempted as indicated]

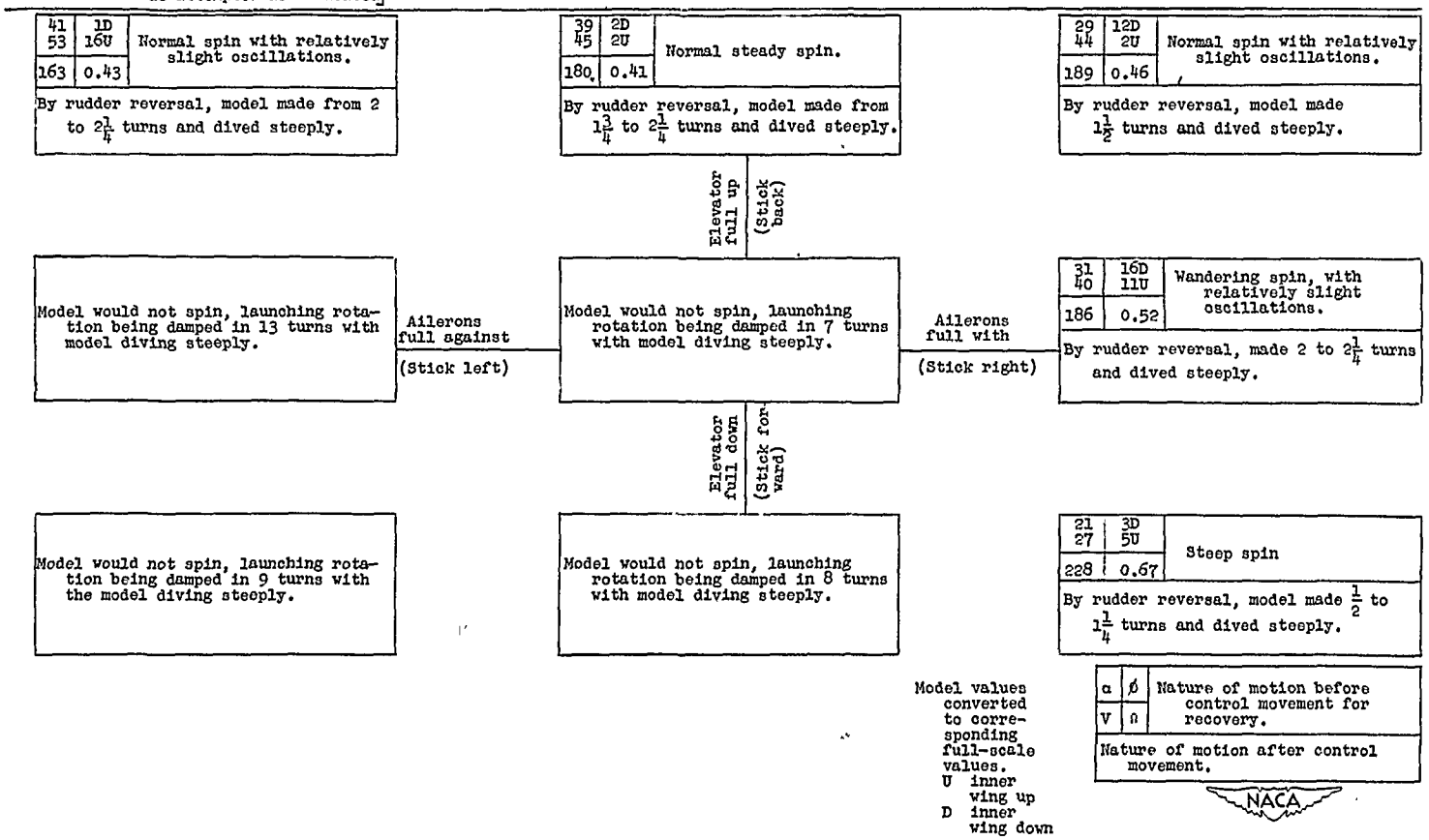

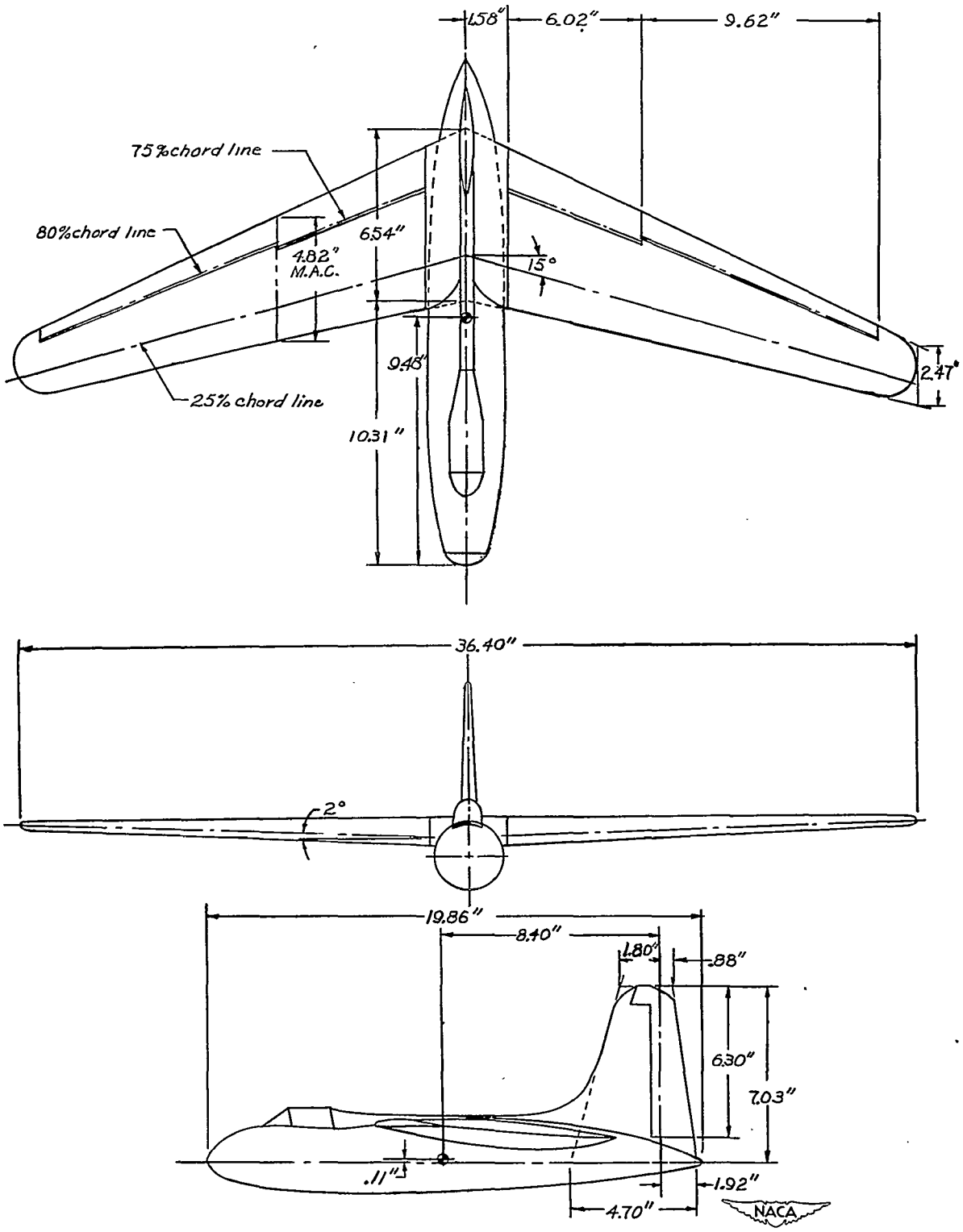

Figure 1.- Three-view drawing of the $\frac{1}{17.8}$-scale model of the Cornelius XFG-1 glider as tested in the free-spinning tunnel. Center of gravity is shown for 20 percent of mean aerodynamic chord.

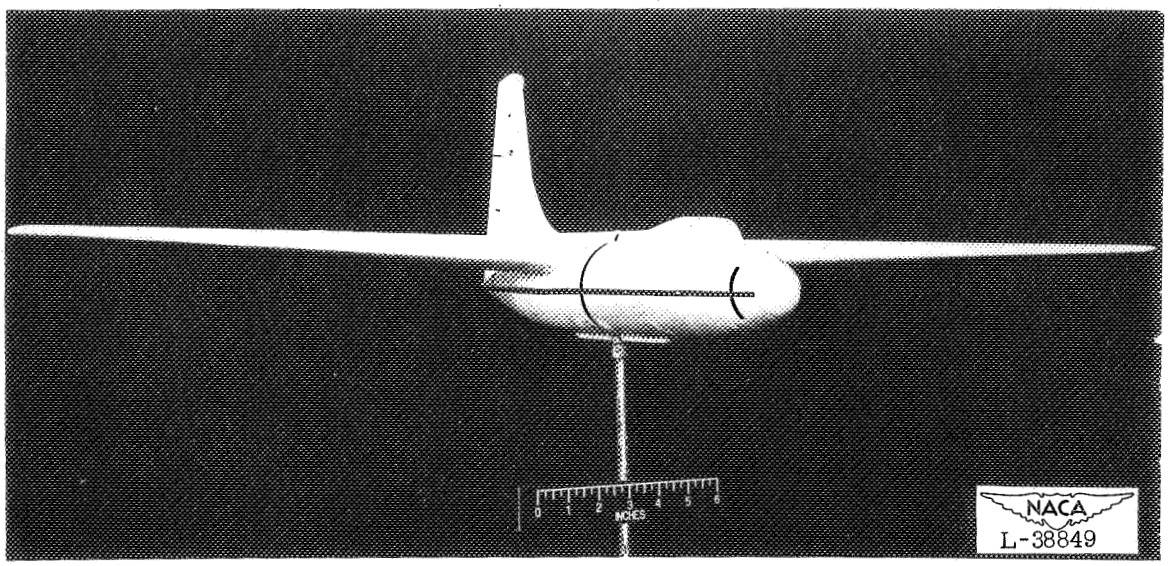

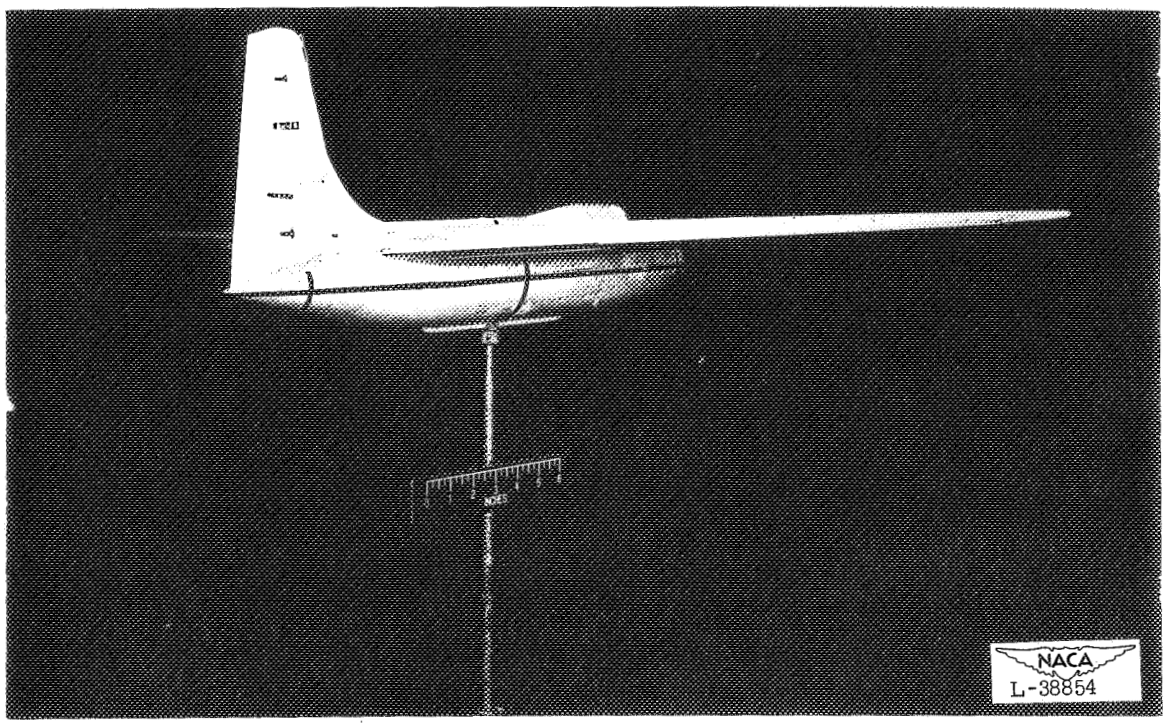

Figure 2.- Photographs of a $\frac{1}{17.8}$-scale model of the Cornelius XFG-1 glider as tested in the Langley 20-foot free-spinning tunnel.

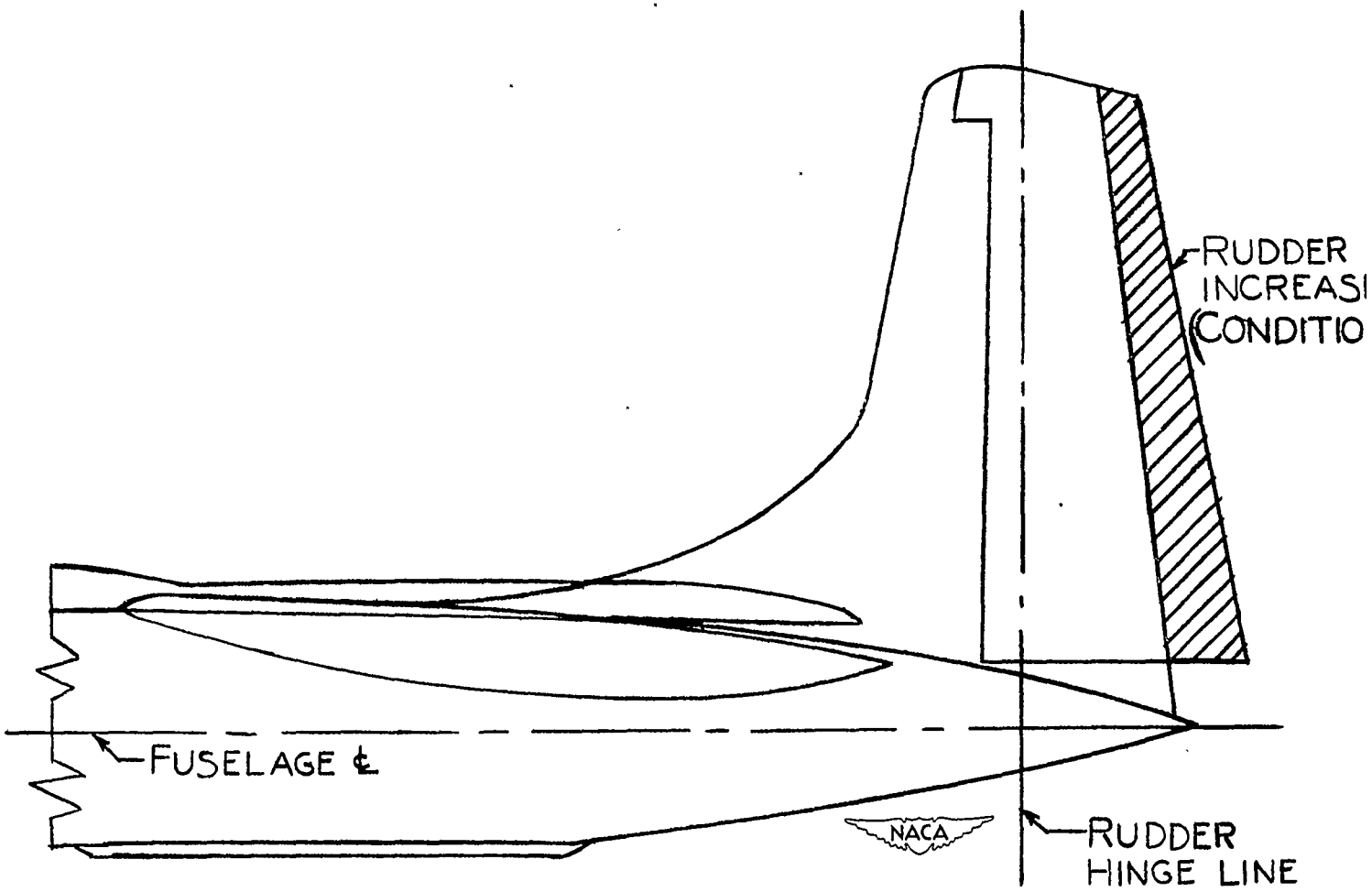

Figure 3.- Rudder modification tested on the $\frac{1}{17.8}$-scale model of the XFG-1 glider with the origina
vertical-tail length.

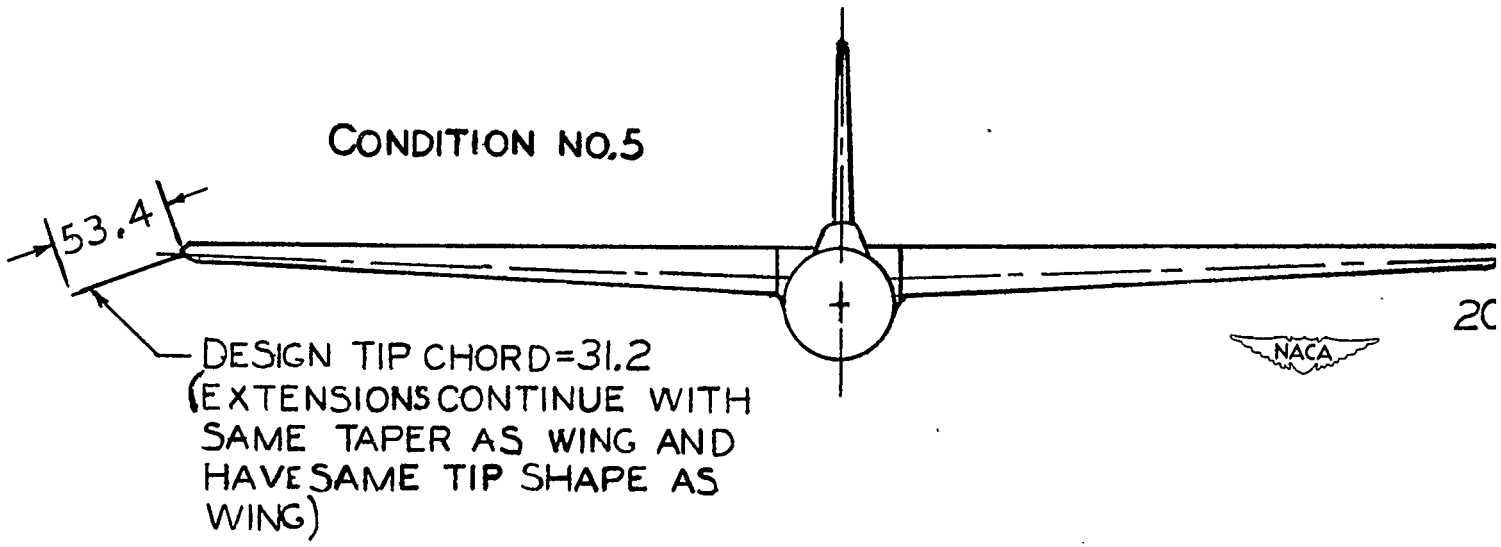

Figure 4.- Wing extensions with negative dihedral tested on the $\frac{1}{17.8}$-scale model of the XFG-1 g with the original vertical-tail length. (Dimensions are in inches, full scale.)

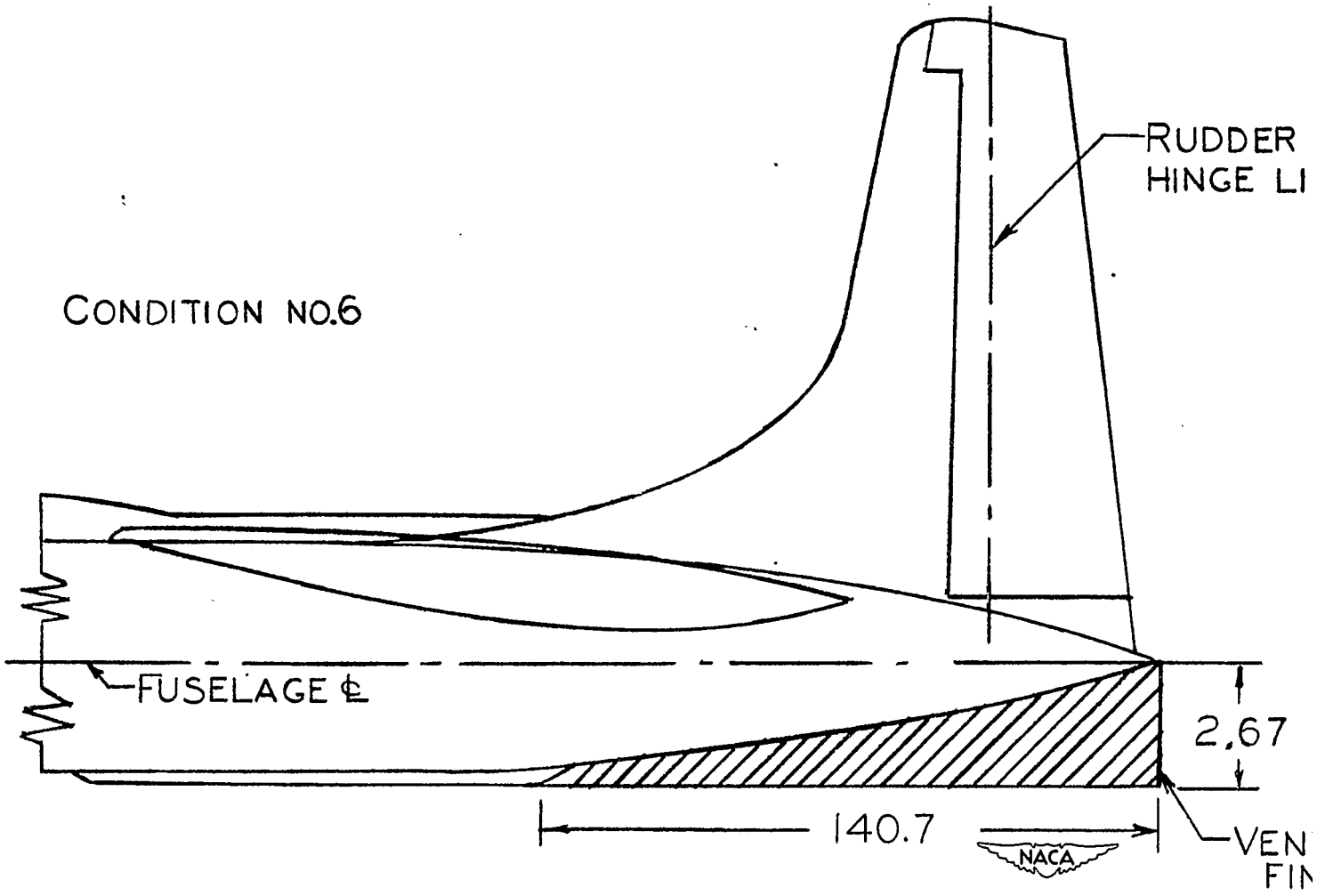

Figure 5.- Ventral fin tested on the $\frac{1}{17.8}$-scale model of the XFG-1 glider with the original vertical-tail length. (Dimensions are in inches, full-scale.)

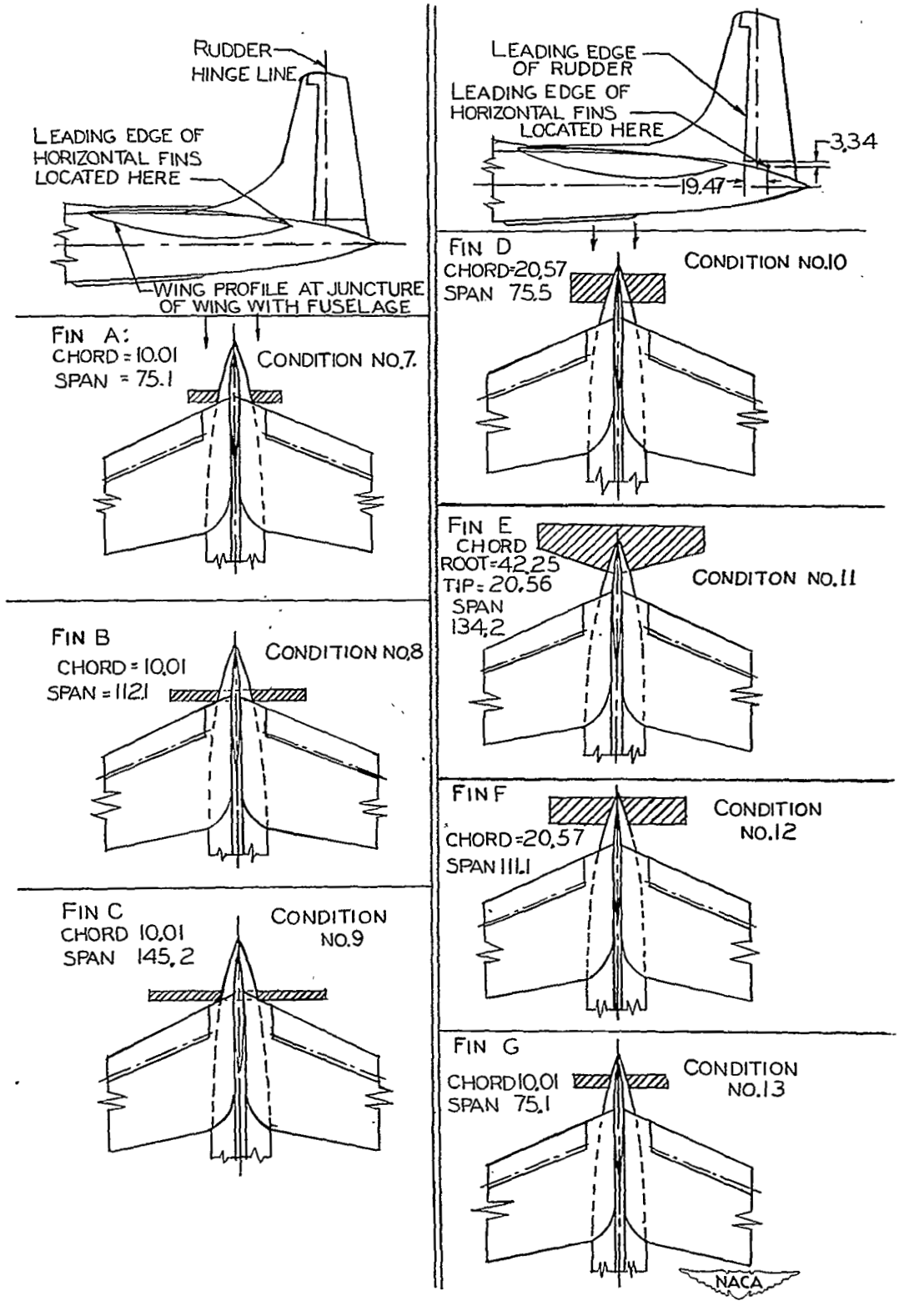

Figure 6.- Horizontal fins tested on the $\frac{1}{17.8}$-scale model of the XFG-1 glider with the original vertical-tail length. (Dimensions are in inches, full scale.)

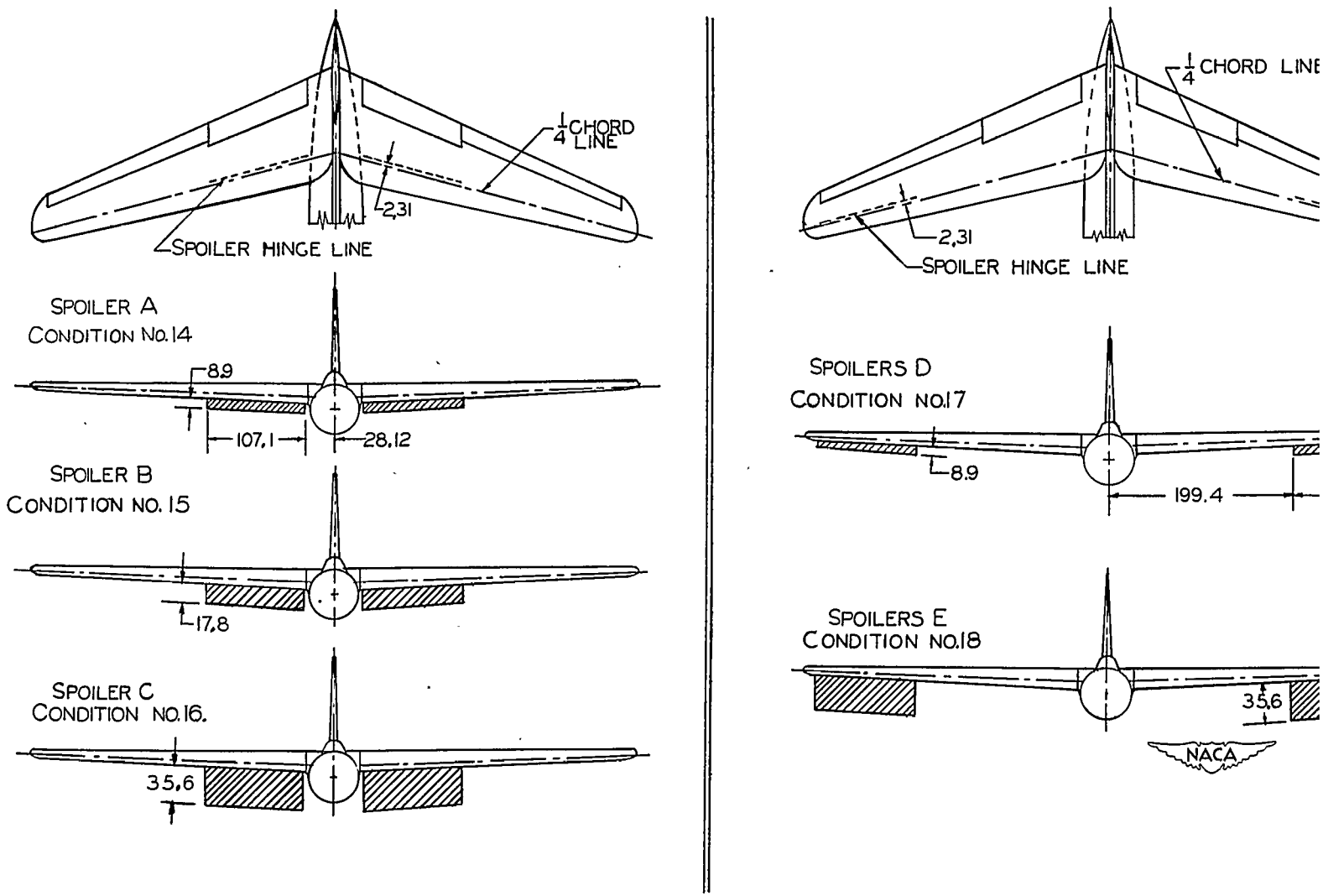

Figure 7.- Under-surface spoilers tested on the $\frac{1}{17.8}$-scale model of the XFG-1 glider with th original vertical-tail length. (Dimensions are in inches, full scale.)

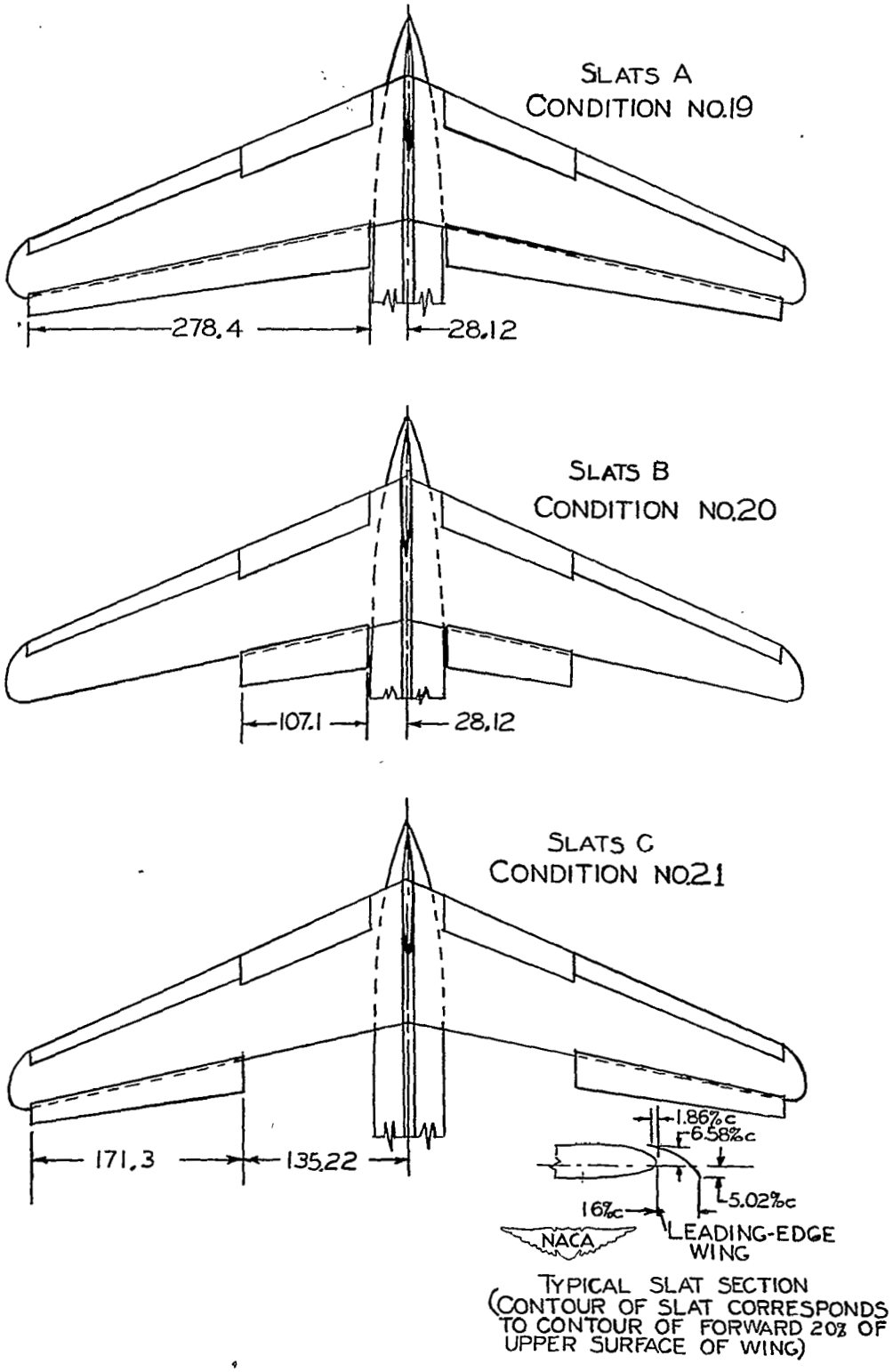

Figure 8.- Leading-edge wing slats tested on the $\frac{1}{17.8}$-scale model of the XFG-1 glider with the original vertical-tail length. (Dimensions are in inches, full-scale.)

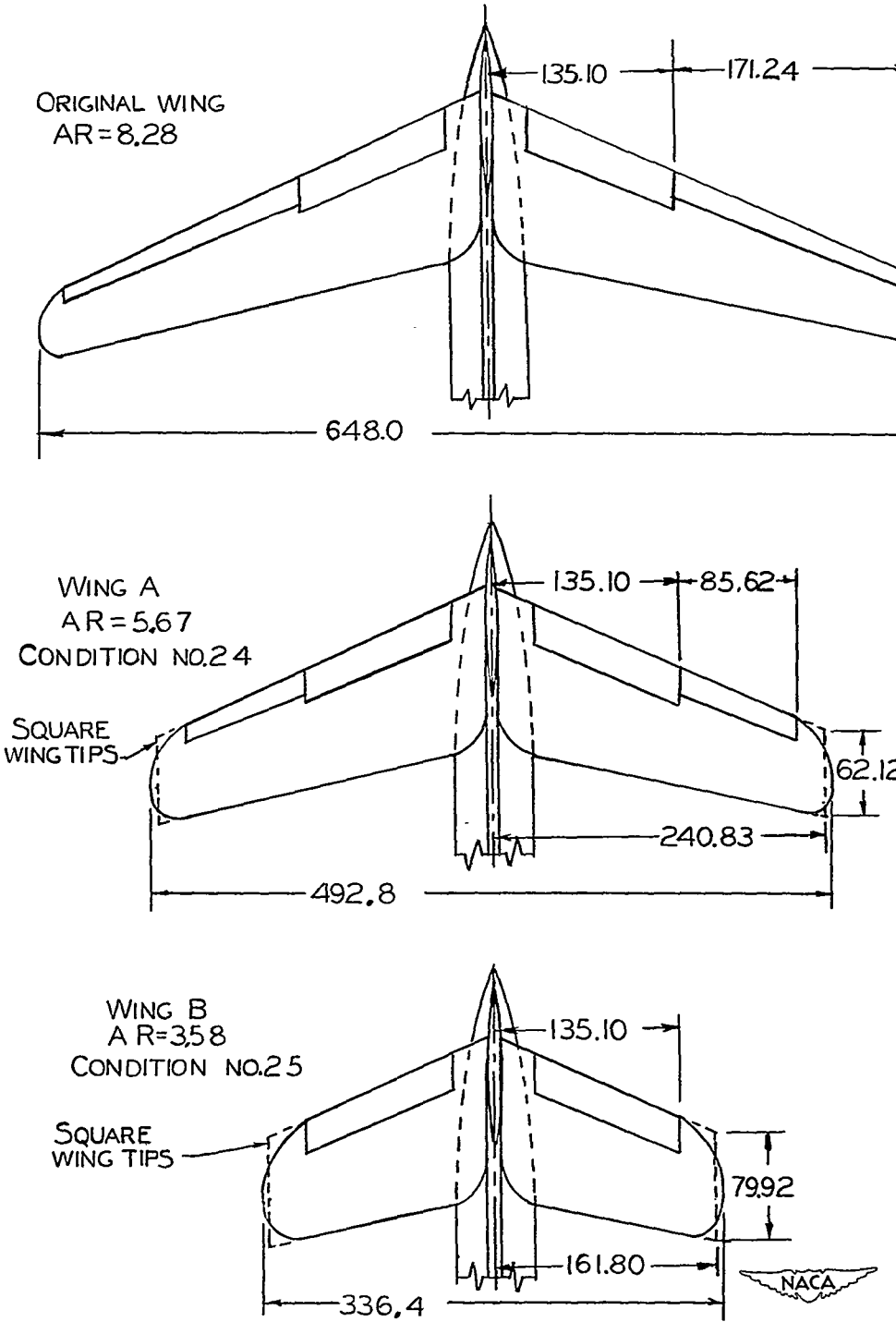

Figure 9.- Wings with decreased aspect ratios tested on the $\frac{1}{17.8}$-scale model of the XFG-1 glider with the original vertical-tail length. (Dimensions are in inches, full scale.)

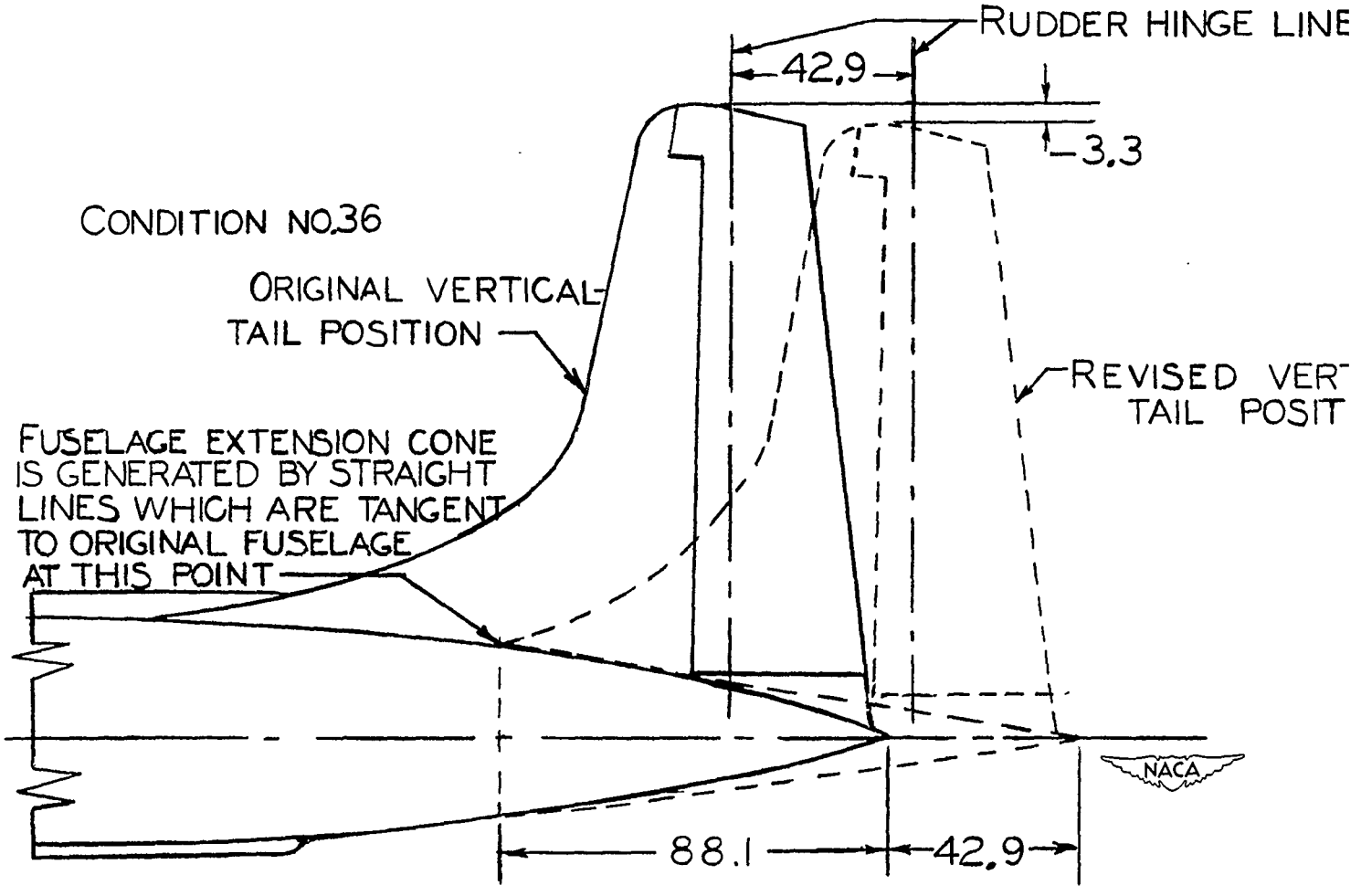

Figure 10.- Increased vertical-tail length tested on the $\frac{1}{17.8}$-scale model of the XFG-1 glider. (Dimensions are in inches, full scale.)

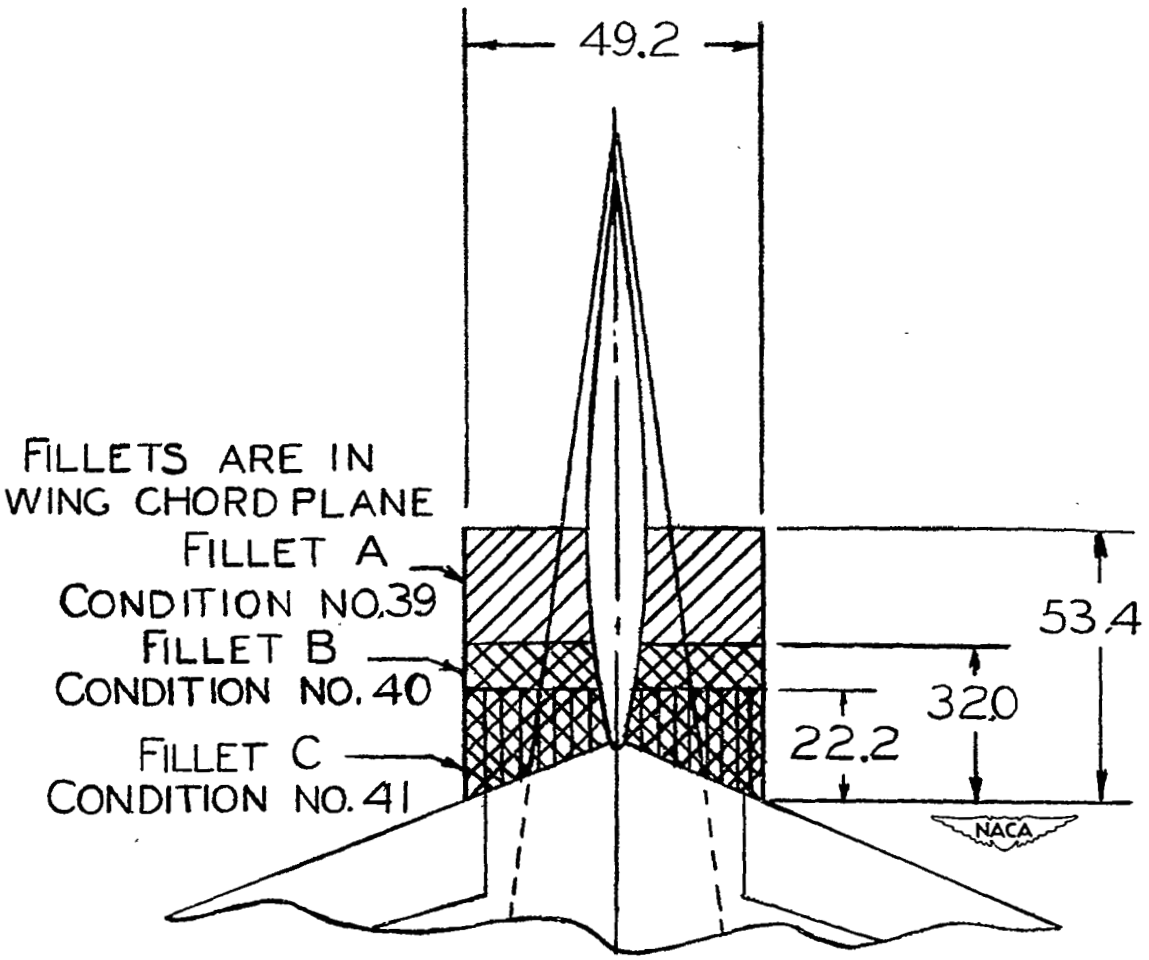

Figure 11.- Wing fillets tested on the $\frac{1}{17.8}$-scale model of the XFG-1 glider with increased vertical-tail length. (Dimensions are in inches, full scale.)

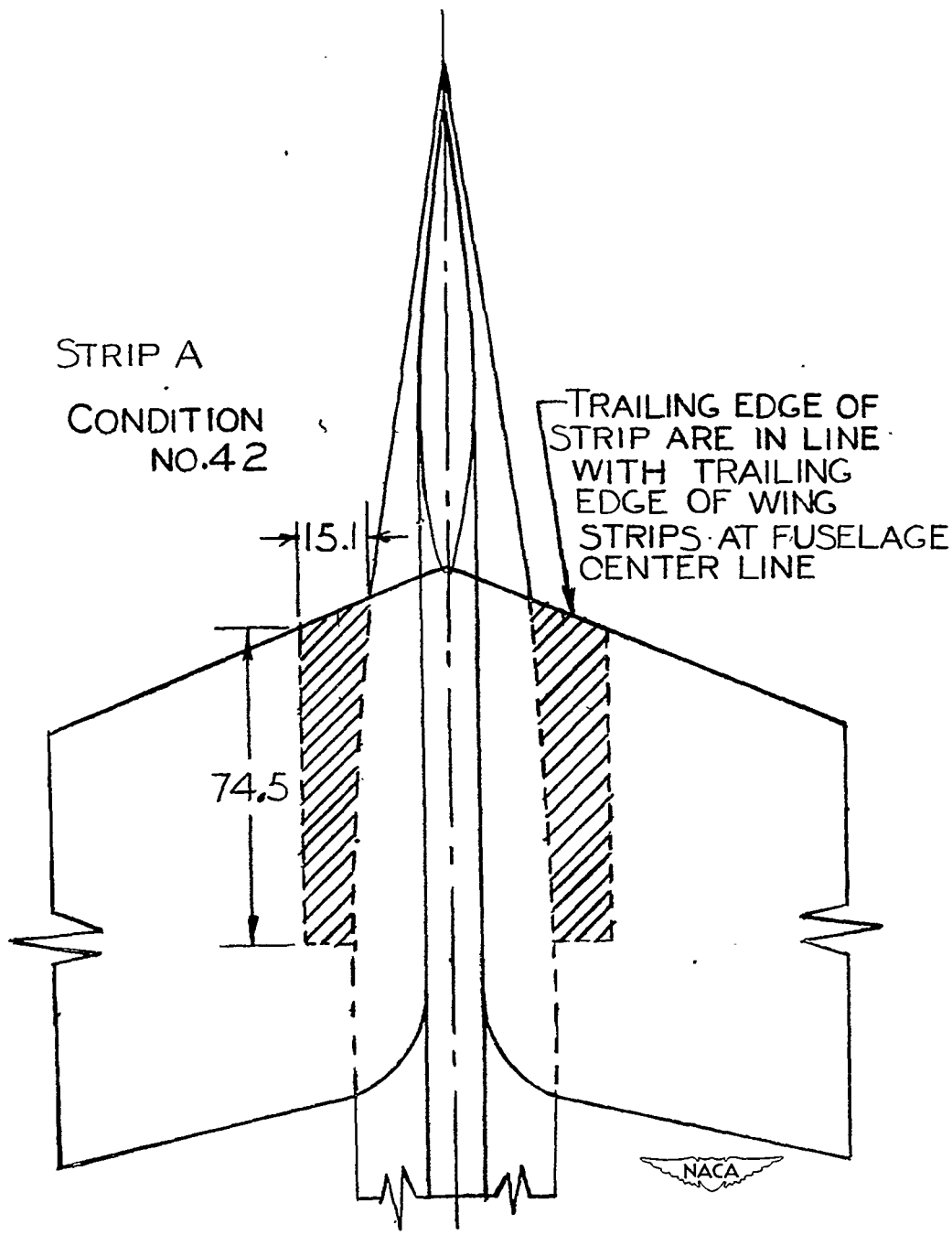

Figure 12.- Horizontal strips tested on the $\frac{1}{17.8}$-scale model of the XFG-1 glider with increased vertical-tail length. (Dimensions are in inches, full scale.)

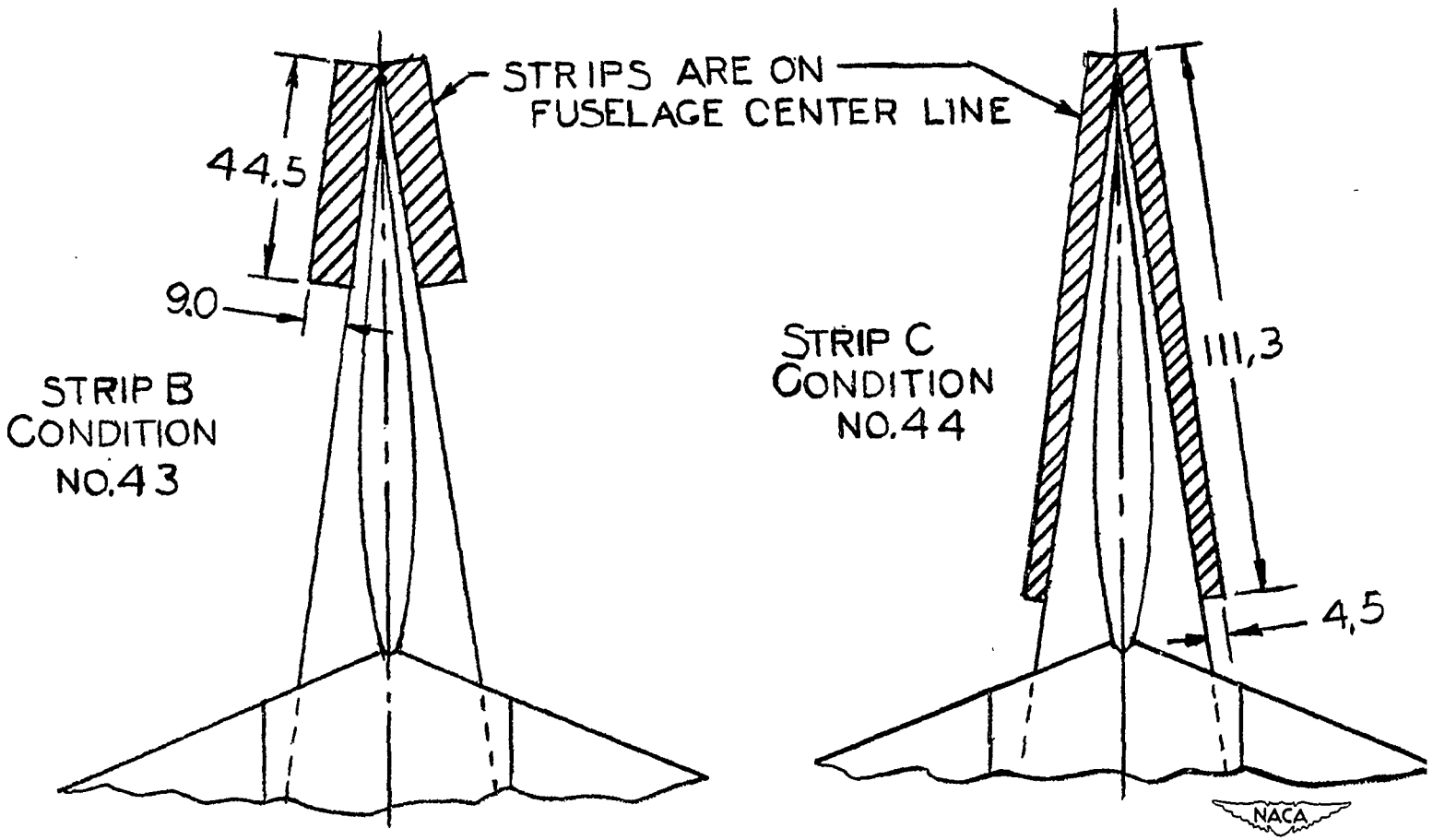

Figure 12.- Concluded.

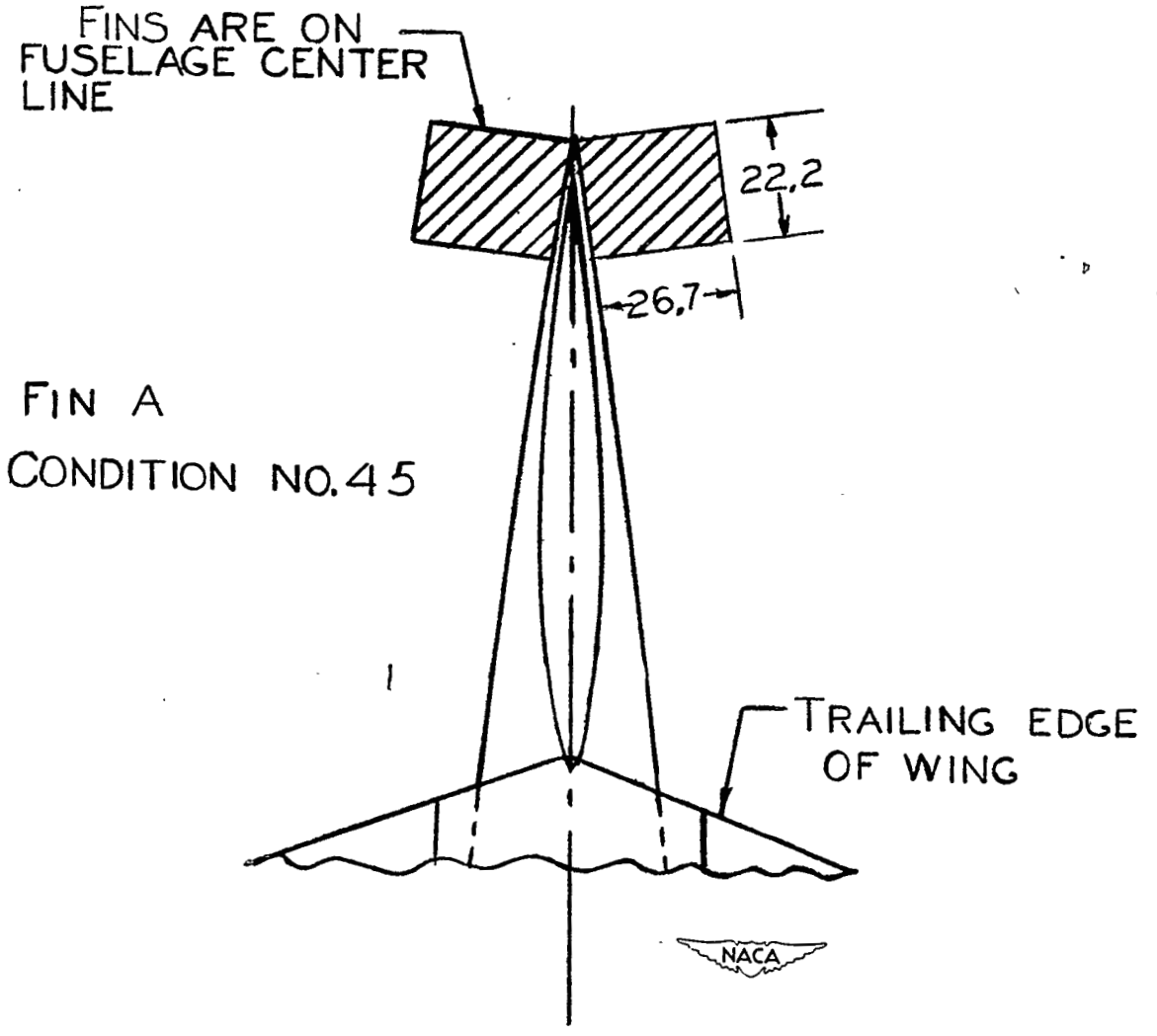

Figure 13.- Horizontal fins tested on the $\frac{1}{17.8}$-scale model of the XFG-1 glider with increased vertical-tail length. (Dimensions are in inches, full scale.)

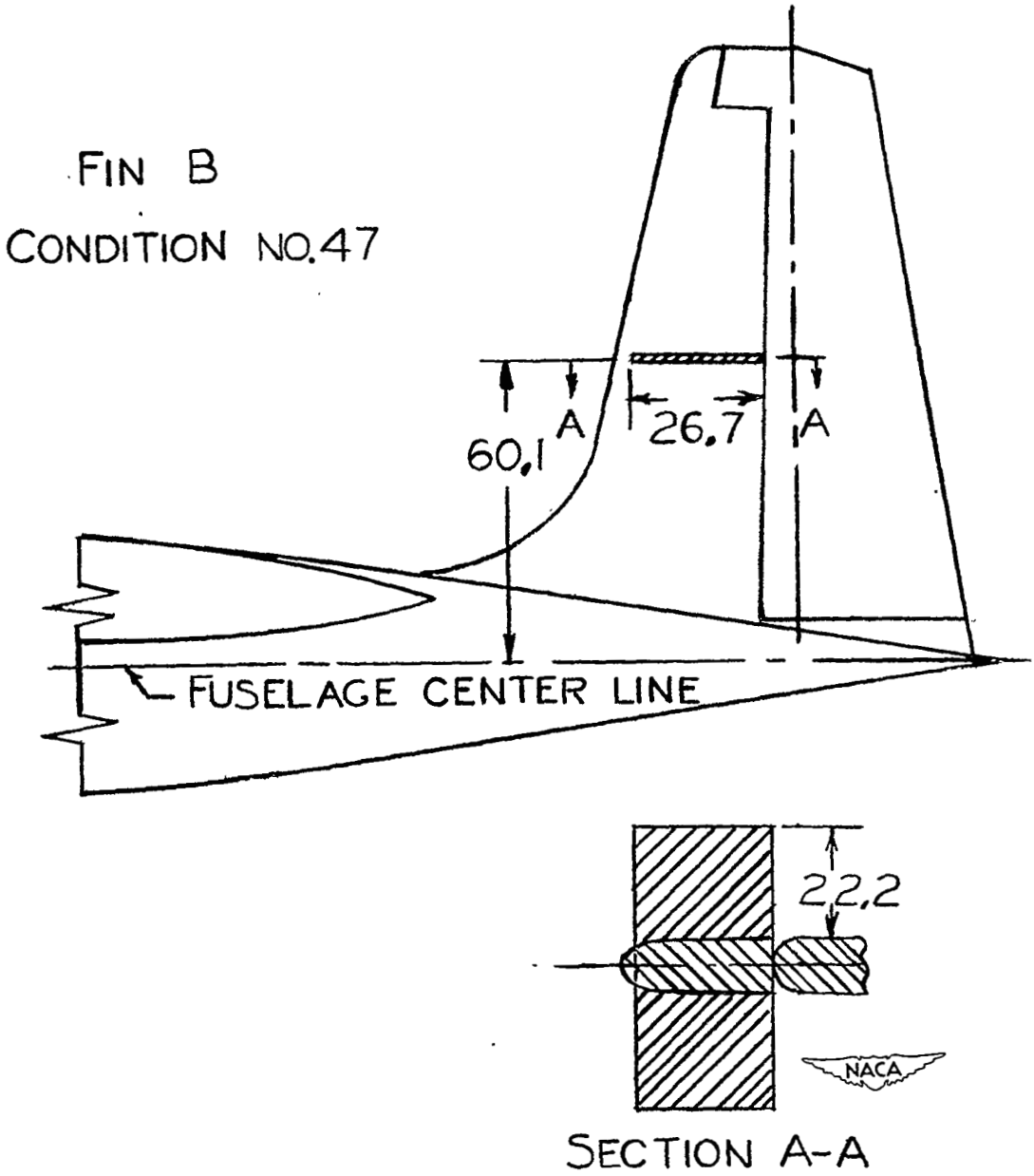

Figure 13.- Continued.

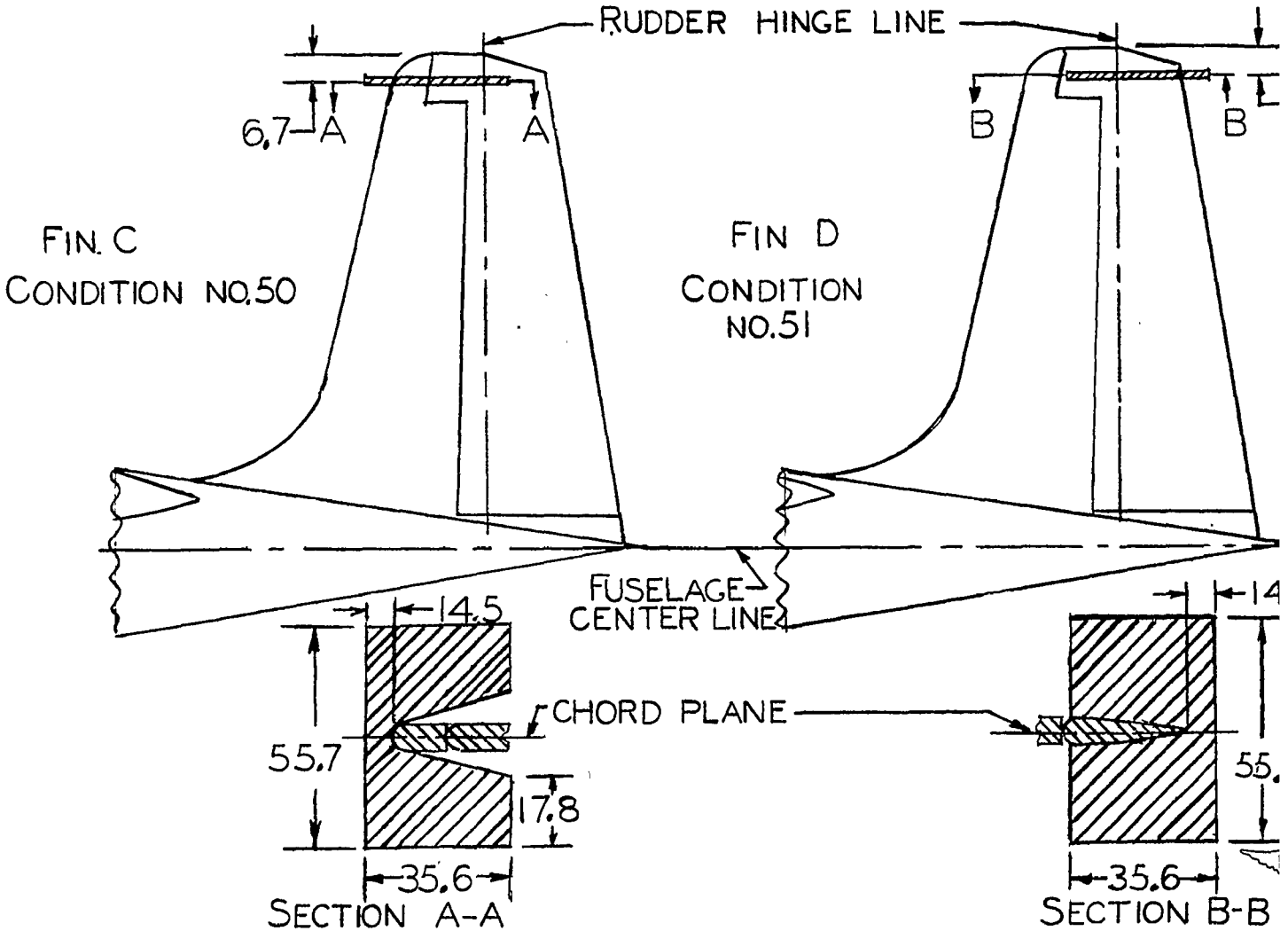

Figure 13.- Concluded.

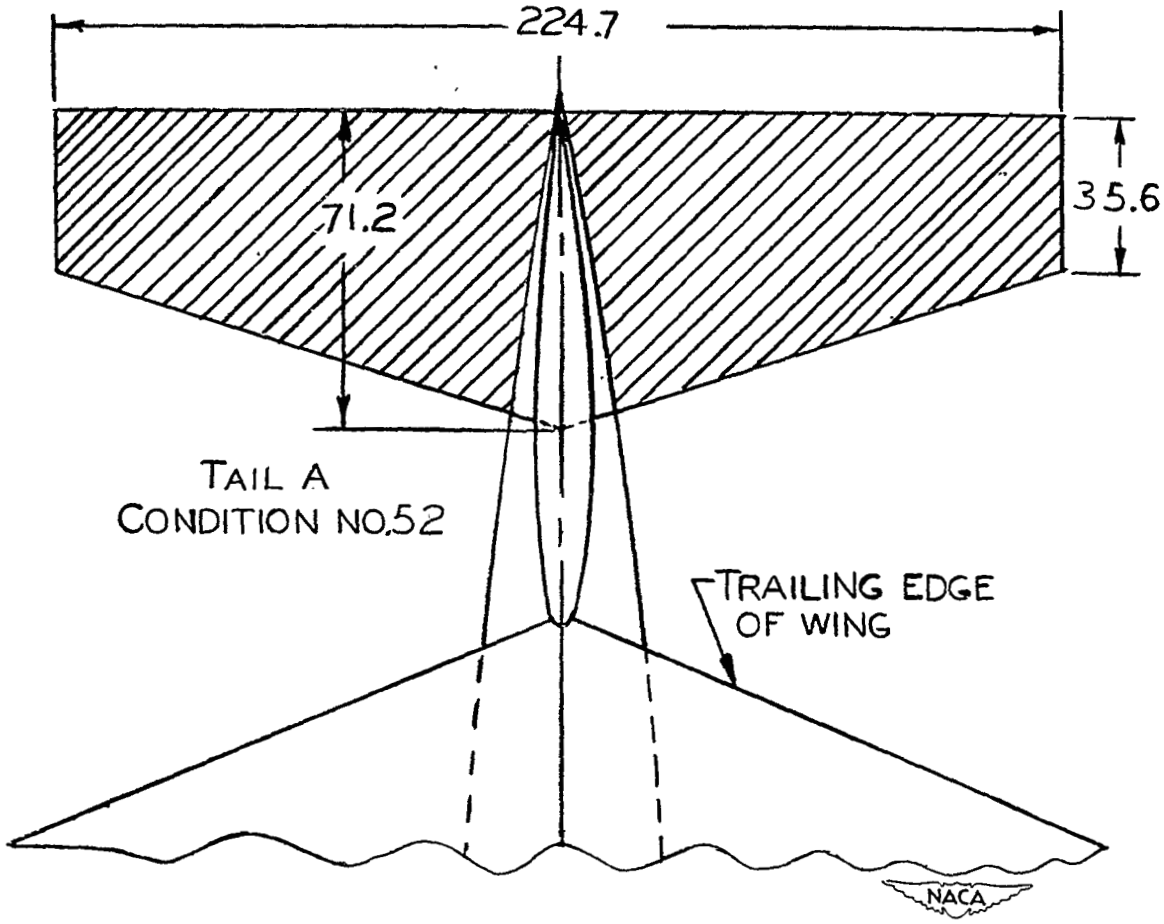

Figure 14.- Horizontal tail tested on the $\frac{1}{17.8}$-scale model of the XFG-1 glider with increased vertical-tail length. (Dimensions are full scale.)

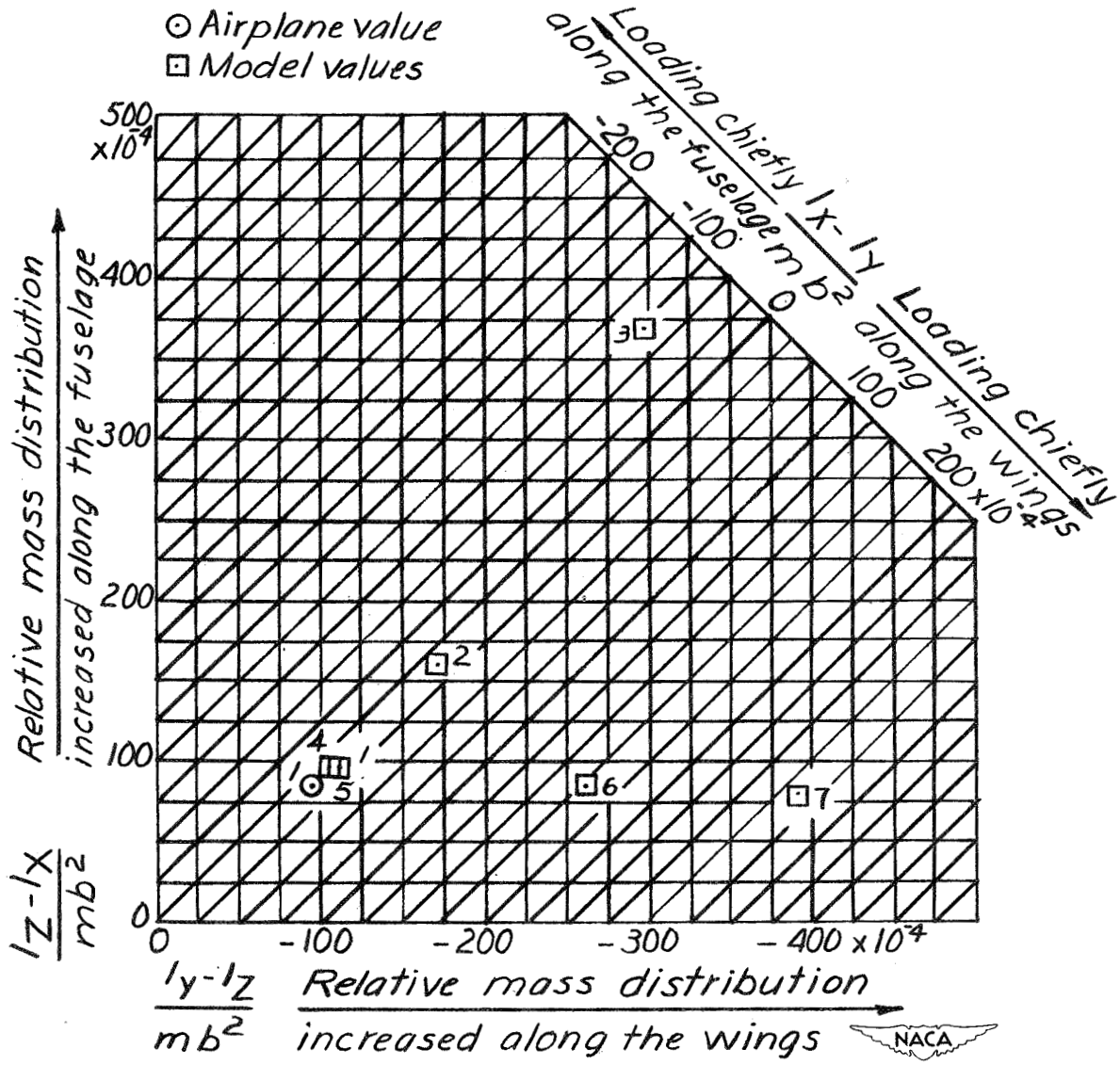

Figure 15.- Mass parameters for the loading of the Cornelius XFG-1 glider and for loadings tested on the models. (Points are for loadings listed in table III.)

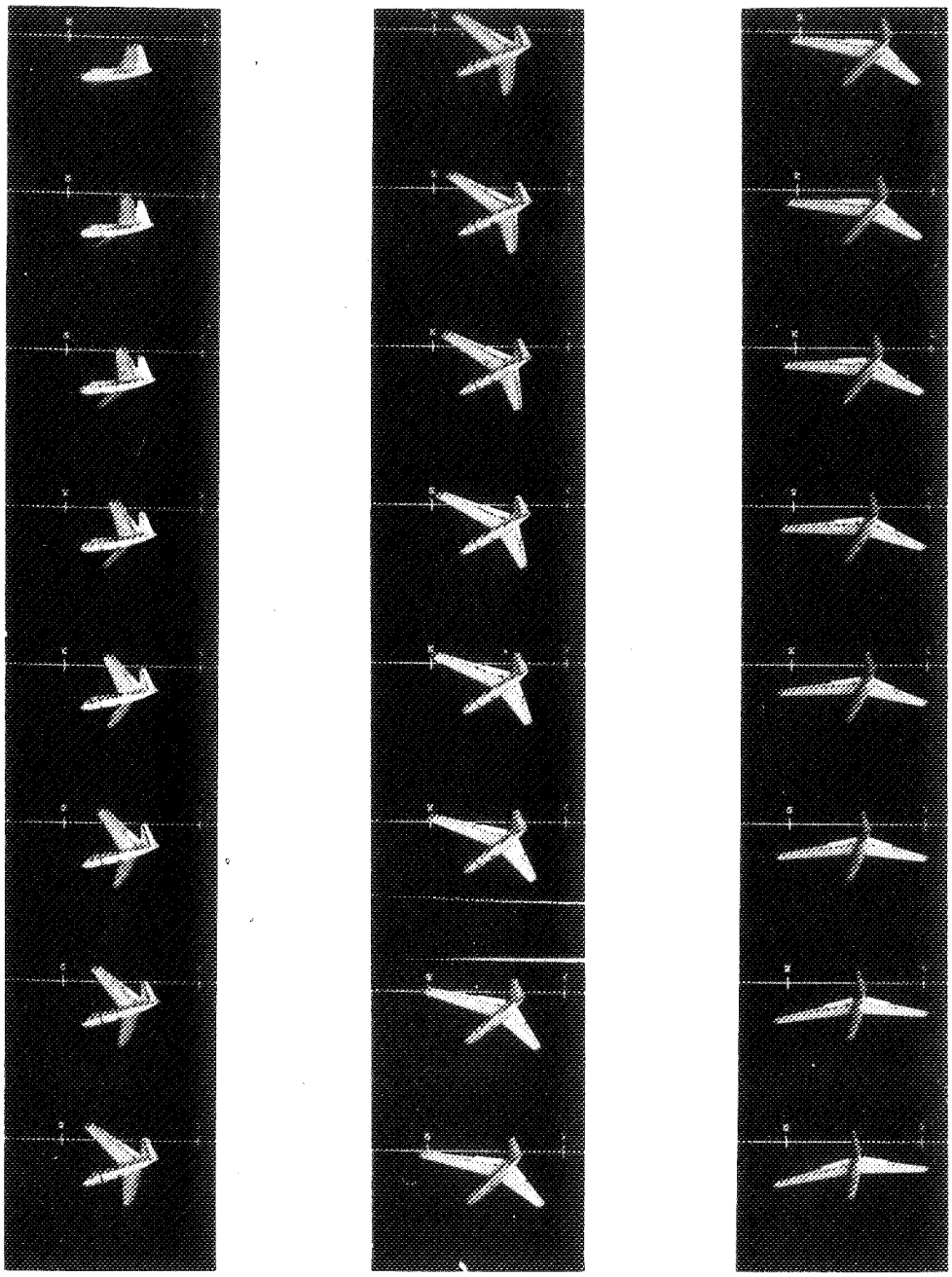

Figure 16.- Typical motion of a $\frac{1}{17.8}$-scale model of the Cornelius XFG-1 glider in the original design condition and in the normal control configuration for spinning. Sixty-four frames per second.

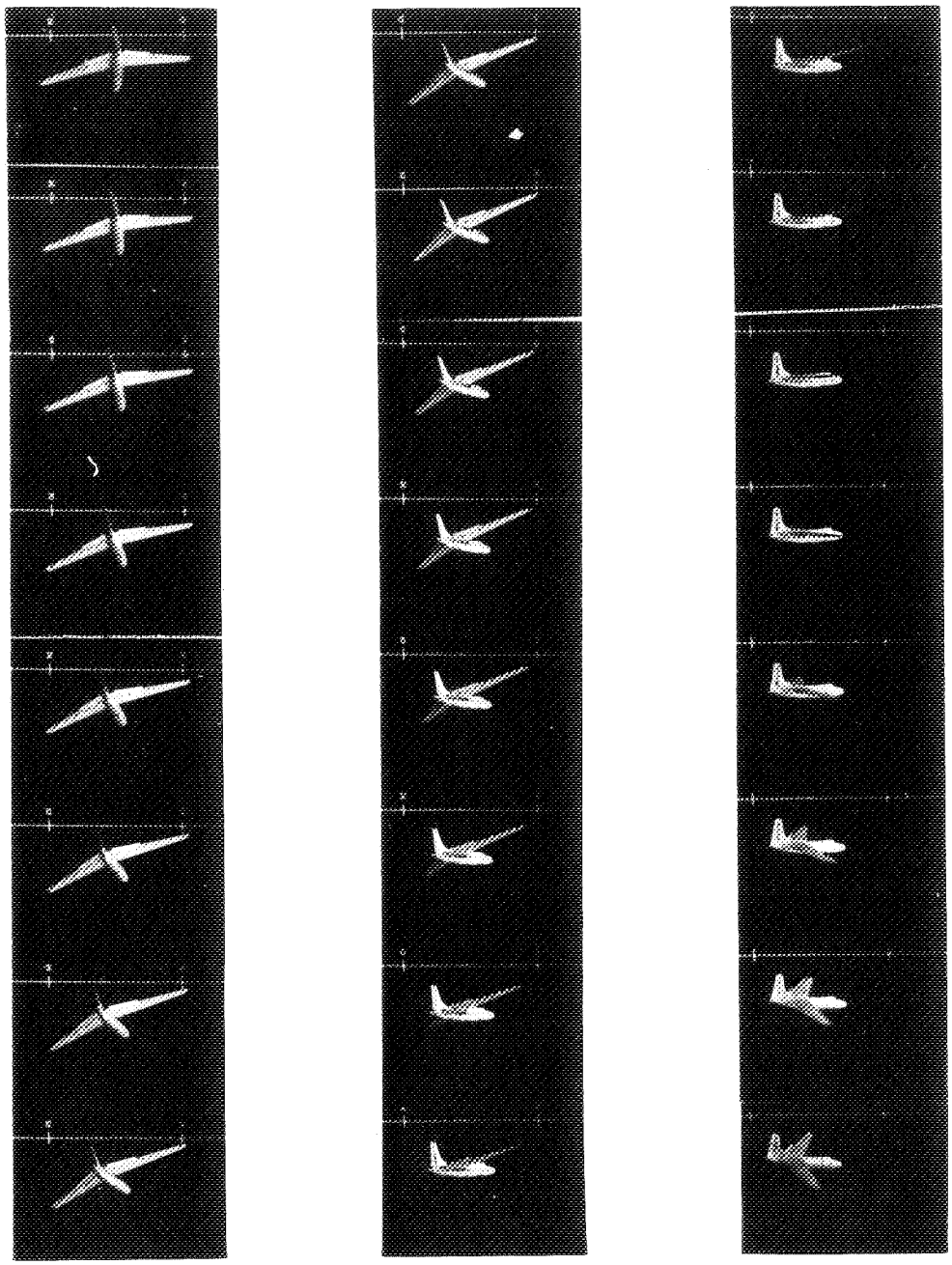

Figure 16.- Continued.

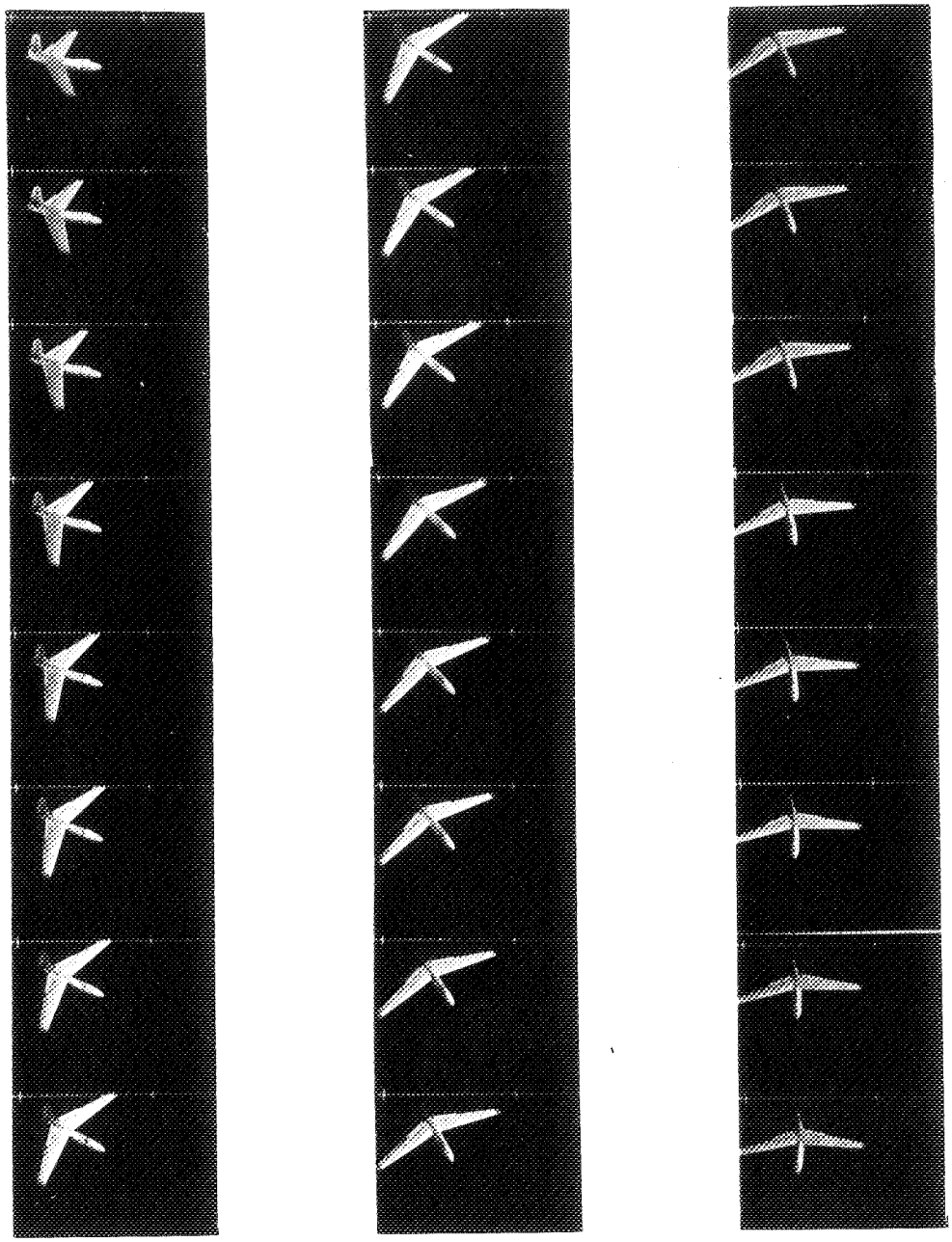

Figure 16.- Continued.

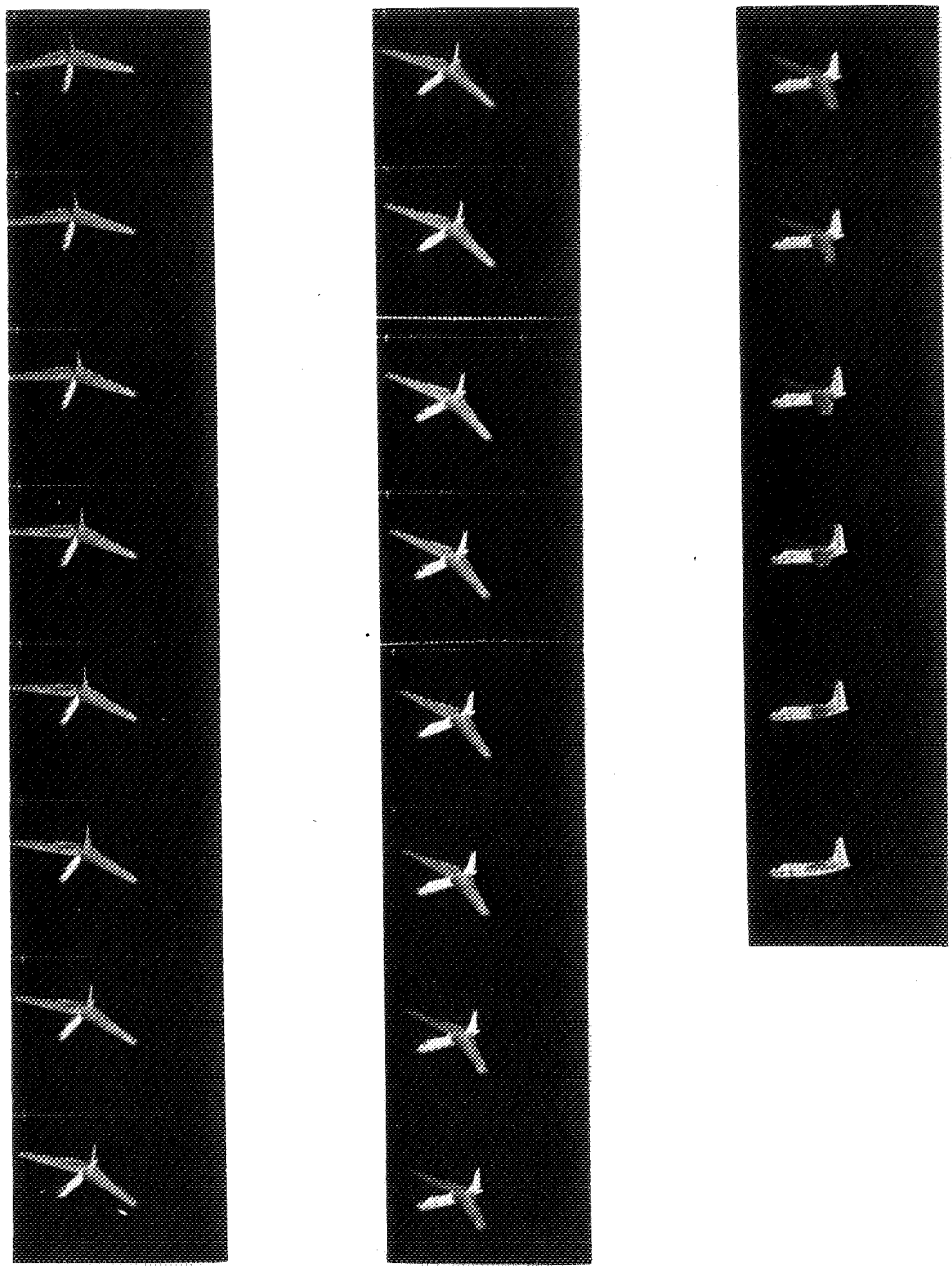

Figure 16.- Concluded.

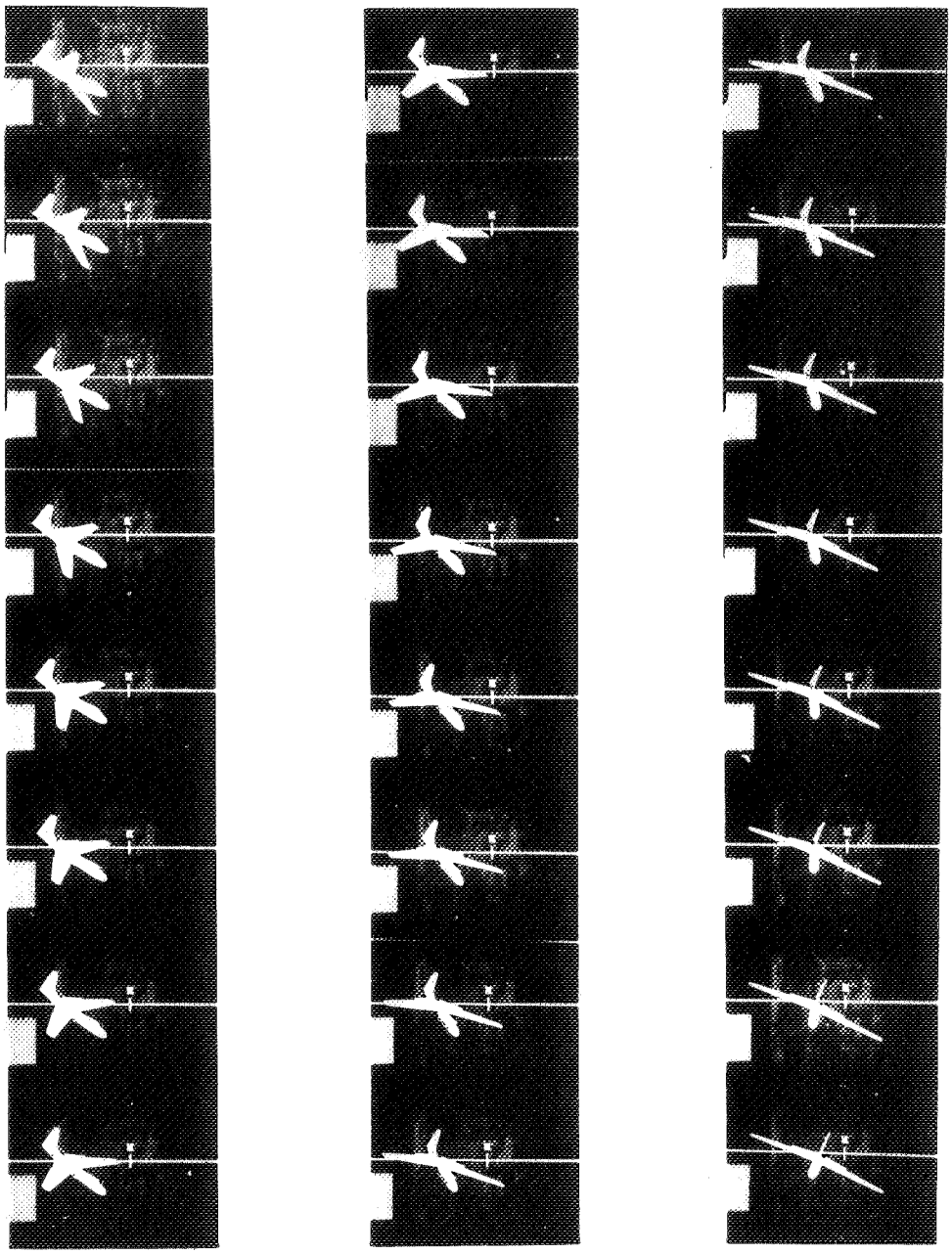

Figure 17.- Typical motion of a $\frac{1}{17.8}$-scale model of the Cornelius XFG-1 glider with increased vertical-tail length and in the normal control configuration for spinning. Sixty-four frames per second.

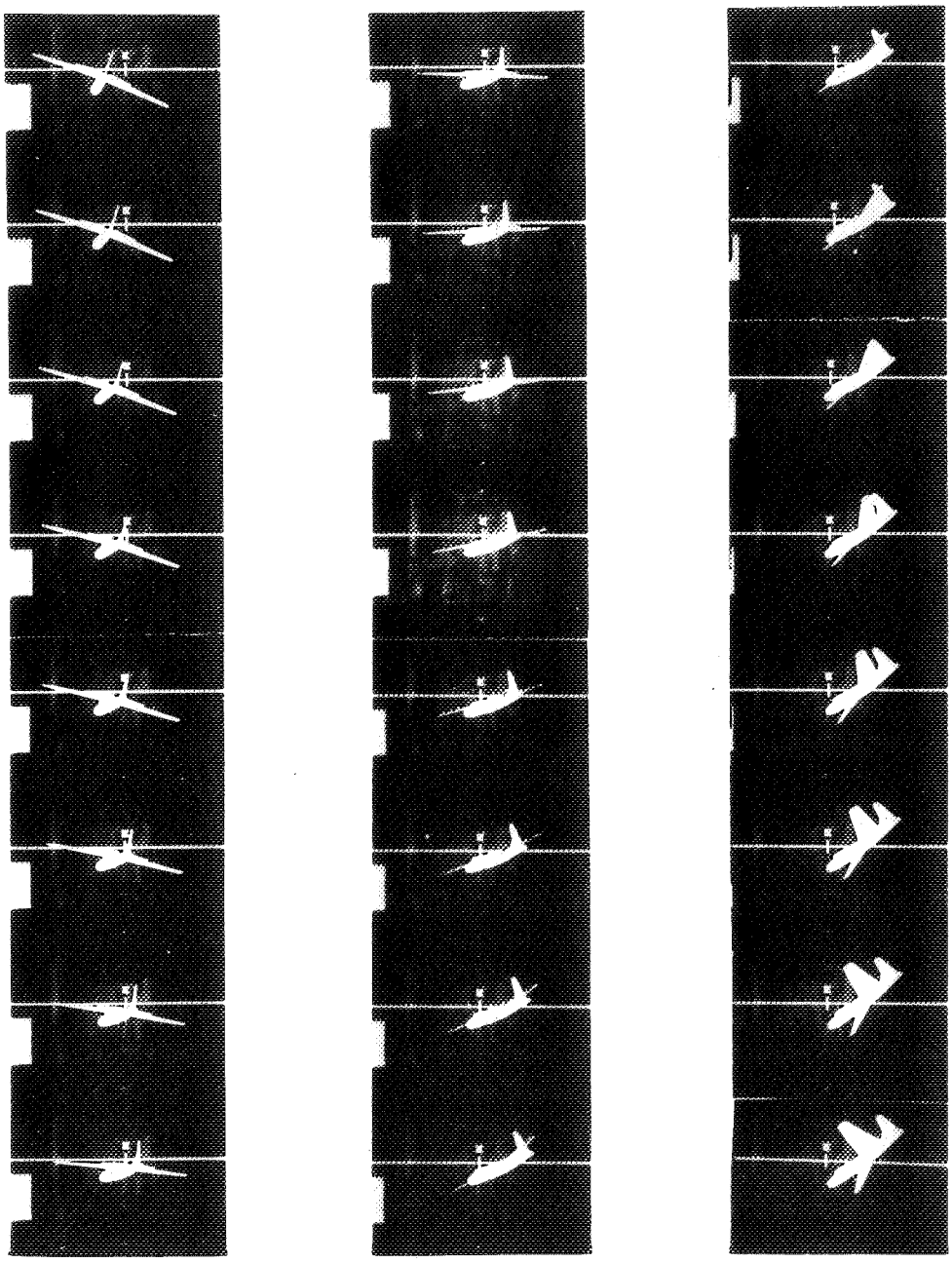

Figure 17.- Continued.

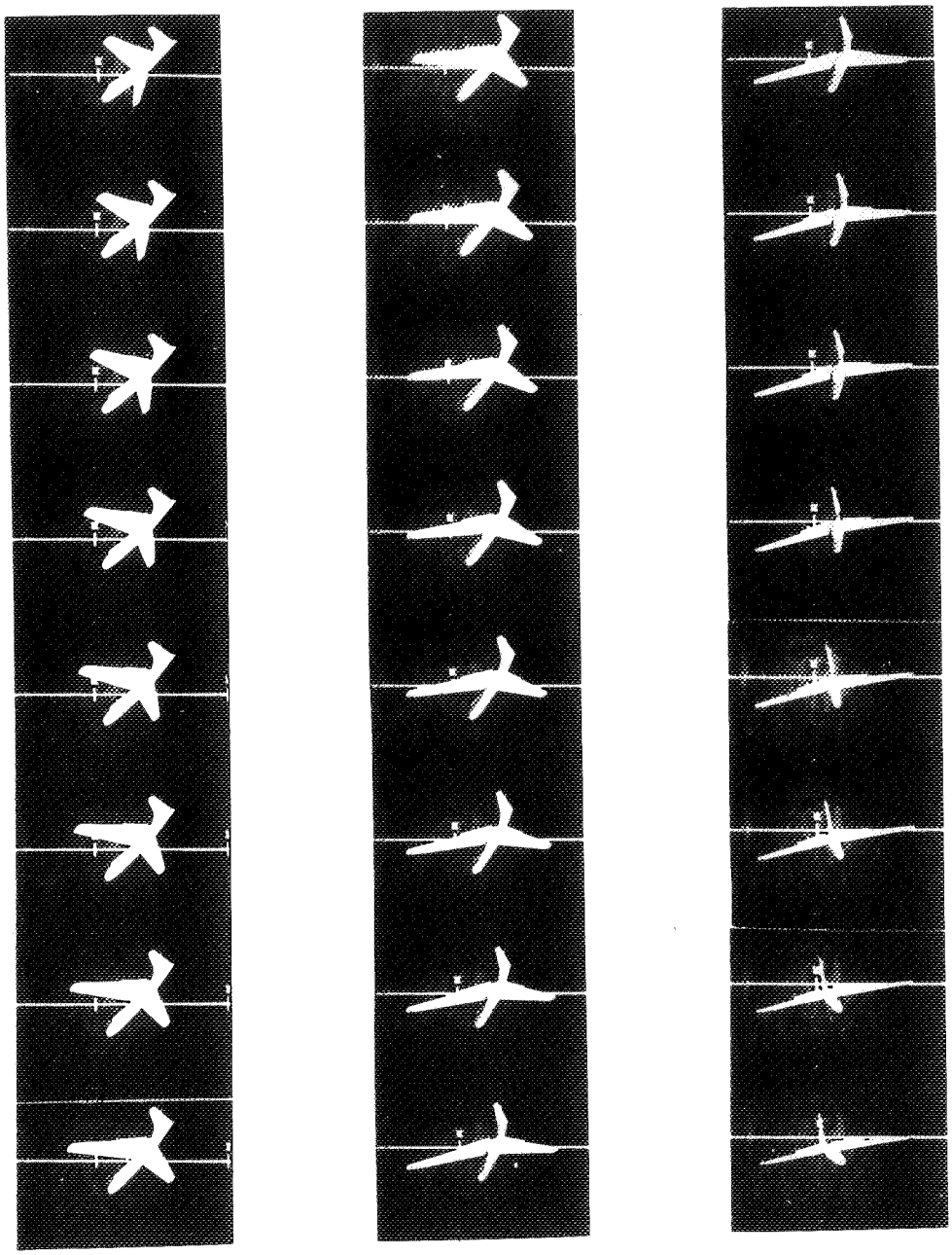

Figure 17.- Continued.

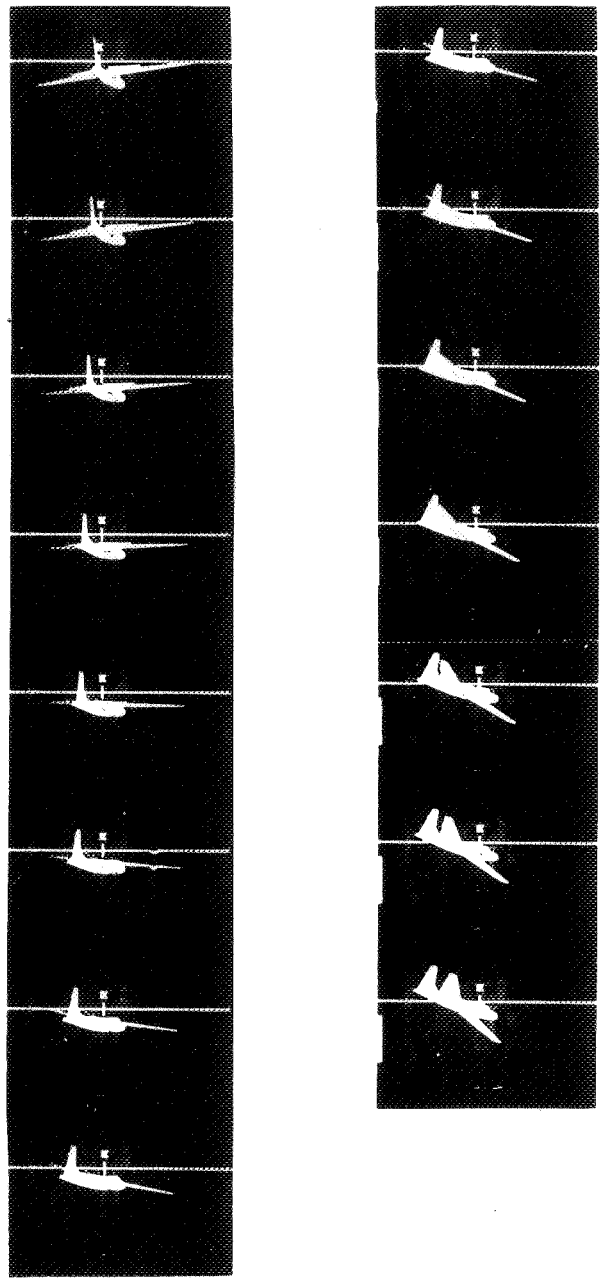

Figure 17.- Concluded.

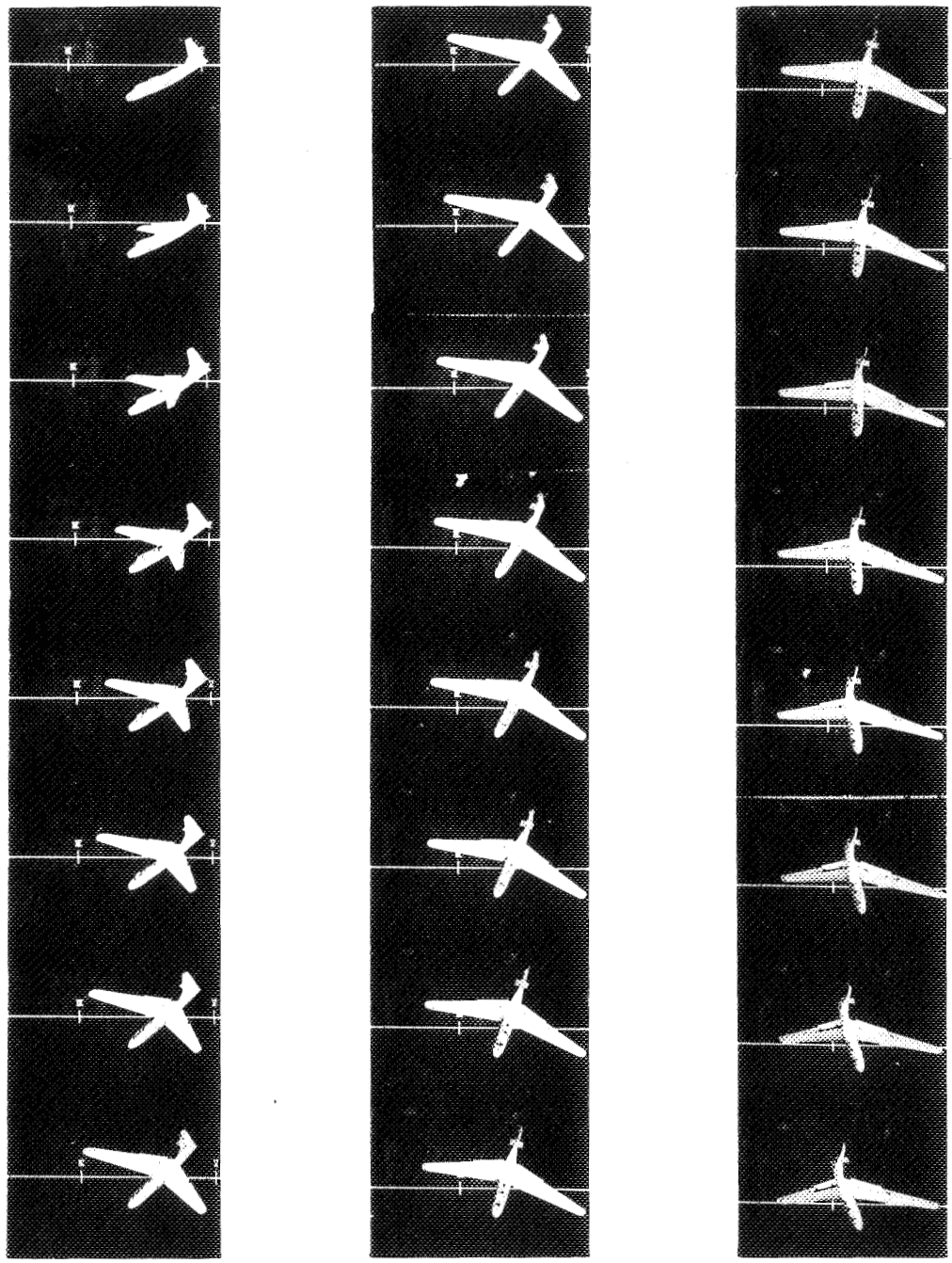

Figure 18.- Typical motion of a $\frac{1}{17.8}$-scale model of the Cornelius XFG-1 glider with increased vertical-tail length, horizontal fins, and horizontal strips, and in the normal control configuration for spinning.

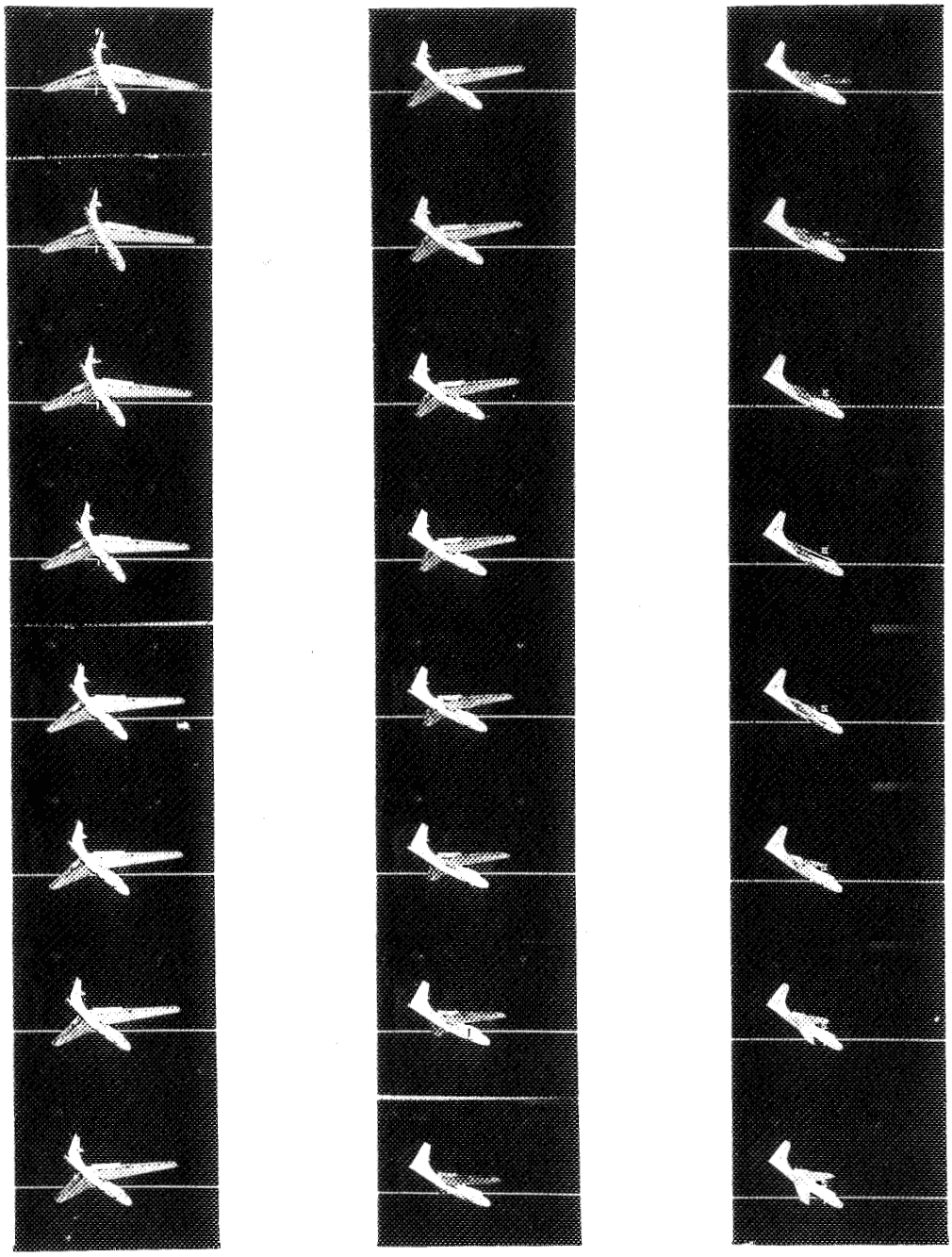

Figure 18.- Continued.

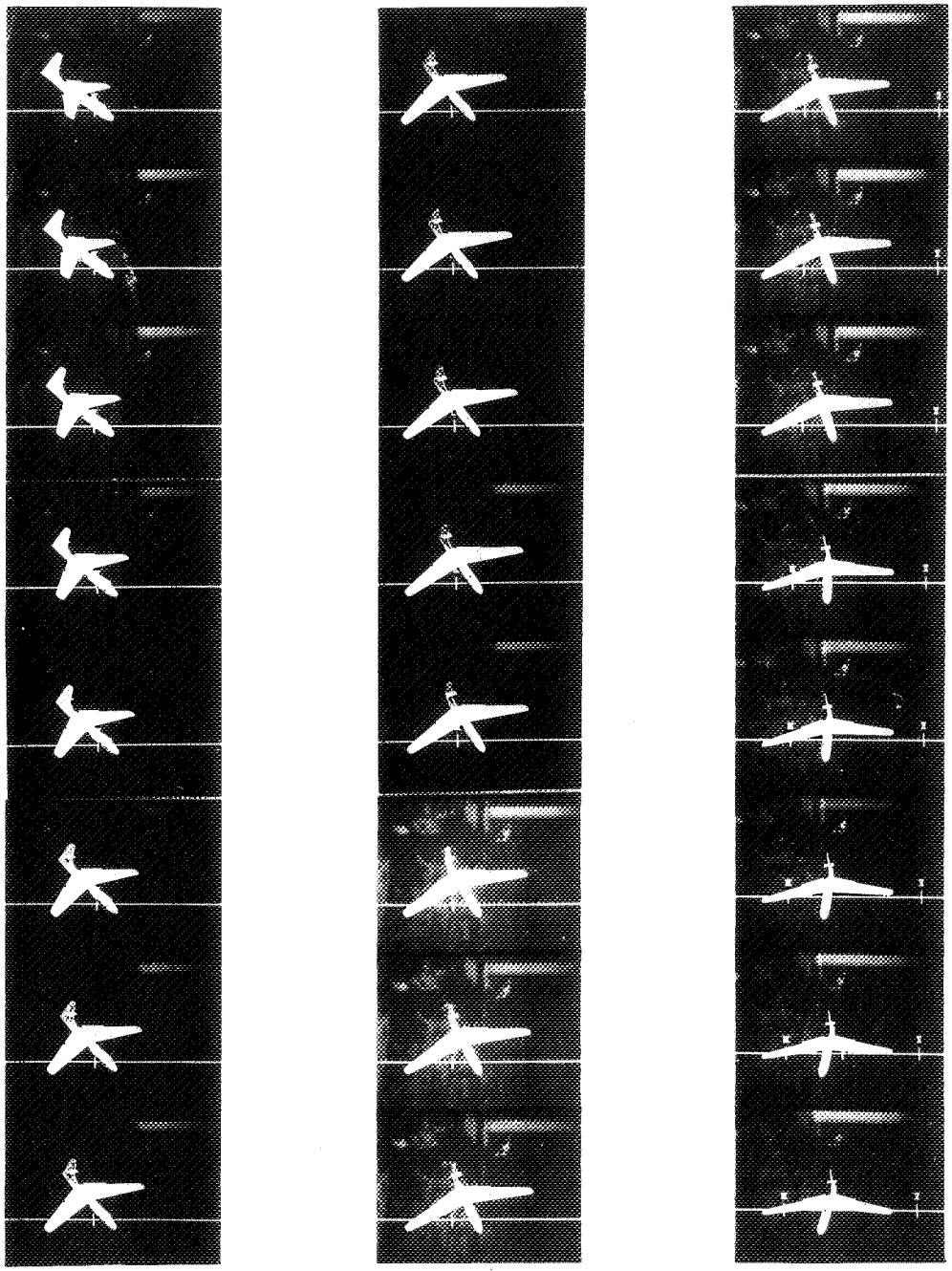

Figure 18.- Continued.

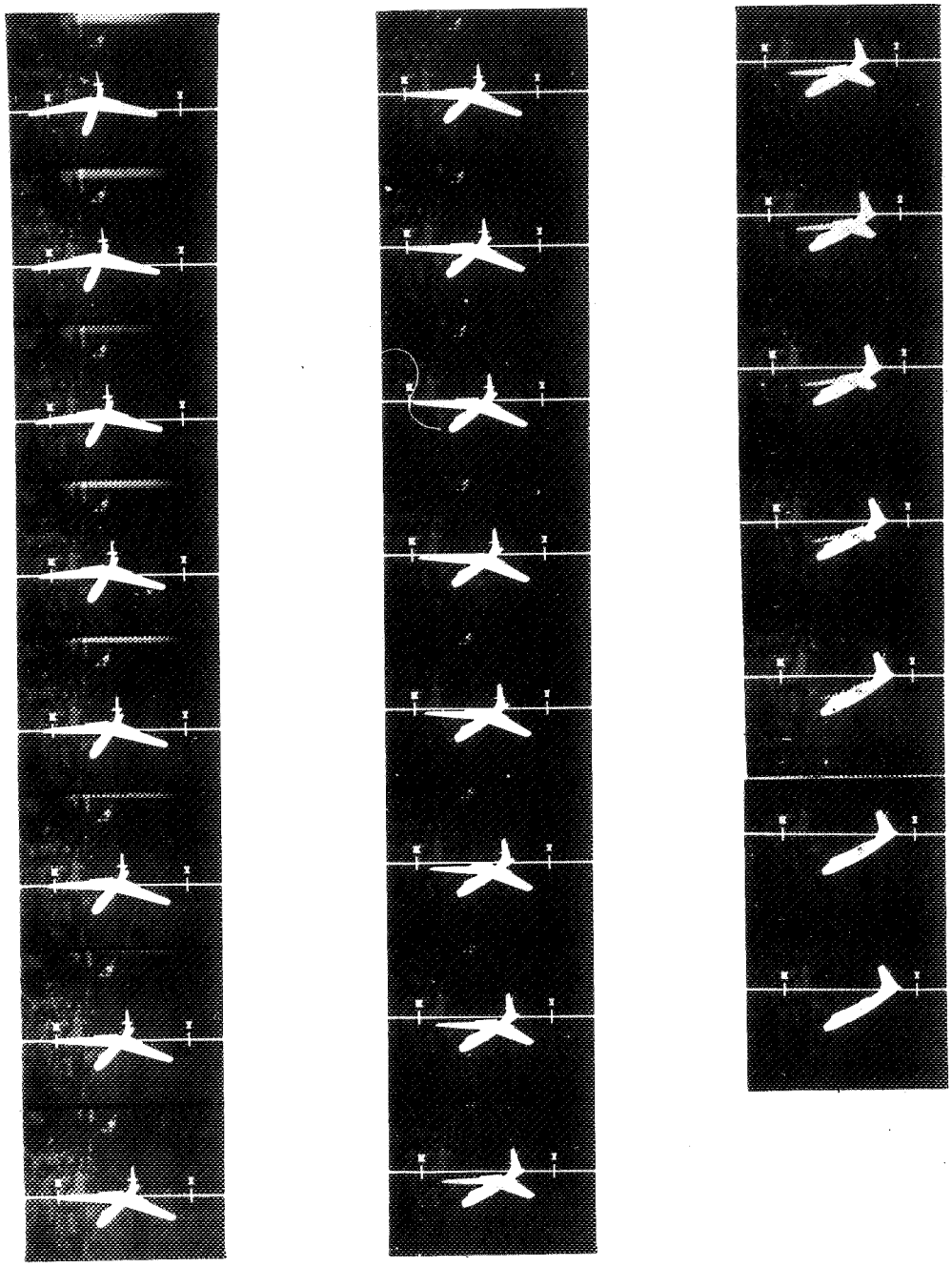

Figure 18.- Concluded.

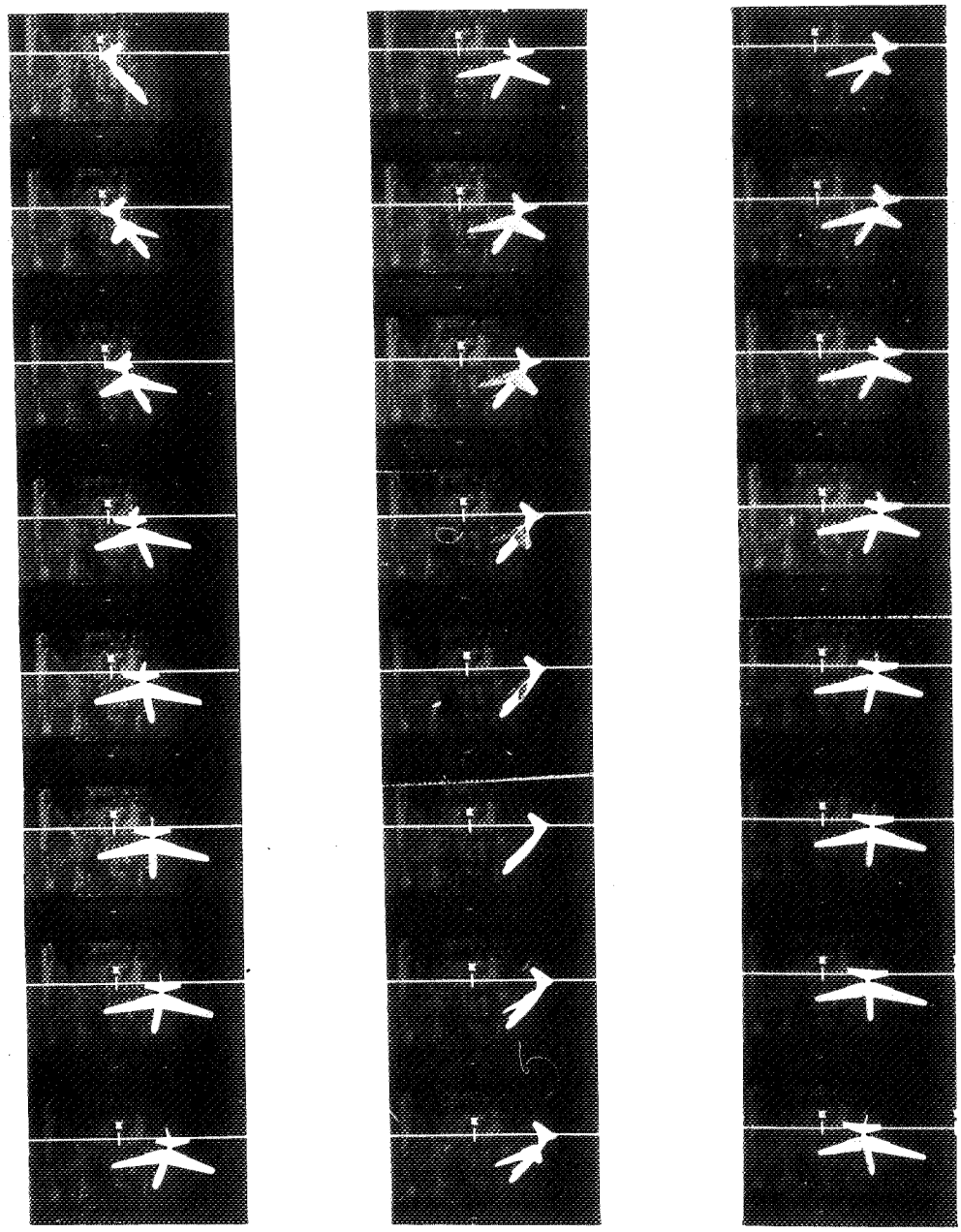

Figure 19.- Typical motion of a $\frac{1}{17.8}$-scale model of the Cornelius XFG-1 glider with increased vertical-tail length and a horizontal tail and in the normal control configuration for spinning.

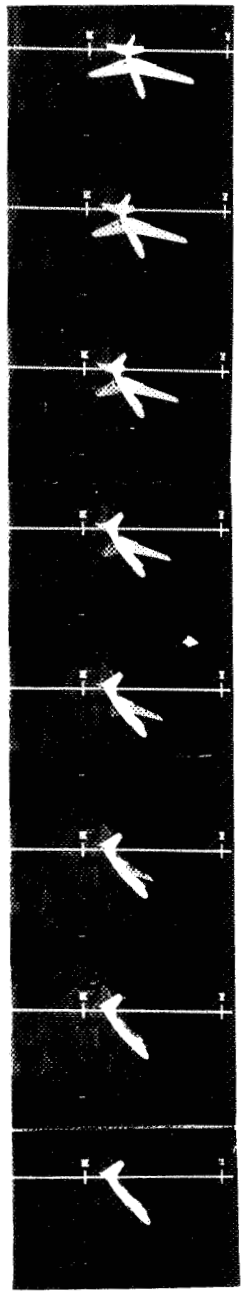

Figure 19.- Concluded.