R.A. 1446 / 1

Inactive

~~CONFIDENTIAL~~

RM No. L7F18

UNCLASSIFIED C-2

JUL 10 1947

RESEARCH MEMORANDUM

for the

Bureau of Aeronautics, Navy Department

CLASSIFICATION CANCELLED

Authority NACA R7 2866 Date 1/11/55

By MAA 1/24/55

PRELIMINARY EVALUATION OF THE SPIN AND RECOVERY CHARACTERISTICS OF THE DOUGLAS XF3D-1 AIRPLANE

By

Stanley H. Scher

Langley Memorial Aeronautical Laboratory
Langley Field, Va.

Restriction/
Classification
Cancelled

[redacted]

This ... affect ... States ... USC ... revel ... unauthorized person is prohibited by law. Information so classified may be imparted only to persons in the military and naval services of the United States, appropriate civilian officers and employees of the Federal Government who have a legitimate interest therein, and to United States citizens of known loyalty and discretion who of necessity must be informed thereof.

TECHNICAL EDITING WAIVED

NATIONAL ADVISORY COMMITTEE FOR AERONAUTICS

WASHINGTON

JUL 3 1947

UNCLASSIFIED

~~CONFIDENTIAL~~

NACA
LANGLEY MEMORIAL AERONAUTICAL LABORATORY

NASA Technical Library
3 1176 01437 5126

UNCLASSIFIED

NATIONAL ADVISORY COMMITTEE FOR AERONAUTICS

RESEARCH MEMORANDUM

for the

Bureau of Aeronautics, Navy Department

PRELIMINARY EVALUATION OF THE SPIN AND RECOVERY CHARACTERISTICS OF THE DOUGLAS XF3D-1 AIRPLANE

By Stanley H. Scher

SUMMARY

A preliminary evaluation of the spin and recovery characteristics of the XF3D-1 airplane has been made, based primarily on the results of free-spinning-tunnel tests of a model which closely simulated the XF3D-1 in tail design, tail length, and mass loading. Estimates have been made of the rudder-pedal force that may be encountered in effecting recovery from a spin and of the spin-recovery-parachute requirements of the airplane for demonstration spins. The method of bail-out which should be used if it becomes necessary for the crew to abandon the airplane during a spin is indicated.

It was indicated that the recovery characteristics of the XF3D-1 airplane in the clean condition for erect and inverted spins would be satisfactory for all loadings specified by the contractor as possible on the airplane. However, if a spin is inadvertently entered while the slow-down brakes of the airplane are open or while the landing flaps are down, recovery may be slow. The slow-down brakes and the landing flaps should be retracted immediately upon the inception of a spinning condition, after which recovery from the spin should be attempted. The pedal force necessary to reverse the rudder during a spin will be within the physical capabilities of the pilot. Opening a 10-foot-diameter parachute attached to the tail (laid-out-flat diameter, drag coefficient 0.7) or a 4.5-foot-diameter parachute attached to the outboard wing tip will insure satisfactory spin recovery from demonstration spins. If it becomes necessary for the crew to abandon the airplane during a spin, they should leave from the outboard side of the cockpit.

UNCLASSIFIED

CONFIDENTIAL

INTRODUCTION

The Bureau of Aeronautics, Navy Department, requested the National Advisory Committee for Aeronautics to make an investigation of the spin and recovery characteristics of the Douglas XF3D-1 airplane, which is a midwing, two-place, jet-propelled fighter airplane. The Bureau also requested that an attempt be made to obtain a preliminary idea of the probable spin characteristics of the proposed XF3D-1 pending the construction of a spin model of the airplane at a later date. Based on XF3D-1 design information available at the Langley Laboratory, tests were made in the free-spinning tunnel on an available model which was modified to simulate the XF3D-1 design. The model, as modified, was similar to the XF3D-1, especially in tail design, tail length, and mass distribution, and represented a $\frac{1}{31.4}$-scale model of the XF3D-1 airplane. The model as tested differed from the XF3D-1 design primarily in aileron size and deflection. Tests were made with the model in the clean condition (flaps, landing gear, and slow-down brakes retracted) for the normal gross weight loading. Later, to determine the effects of the difference in aileron size and deflection for the model as tested and for the XF3D-1 airplane, proper changes in the ratios of aileron span to wing span and in aileron chord to wing chord and changes in the aileron deflection were incorporated into the modified model, and a few additional tests were made. With these modified ailerons installed, brief tests were also made with the slow-down brakes of the XF3D-1 simulated on the model in the fully open position.

The present report contains an evaluation of the spin and recovery characteristics of the XF3D-1 airplane, based on the results of the tests and on spin-tunnel experience. Estimates have been made of the rudder-pedal force that would be encountered in effecting recoveries from spins and of the spin-recovery-parachute requirements for demonstration spinning. The side of the cockpit from which the crew should leave if it becomes necessary to abandon the airplane during a spin is indicated.

The present report is considered applicable as a preliminary indication of the spin and recovery characteristics of the XF3D-1 airplane. It is planned to make brief tests of an actual model of the XF3D-1 airplane in the free-spinning tunnel in the near future to confirm the spin and recovery characteristics indicated herein.

SYMBOLS

b	wing span, feet
S	wing area, square feet
$\bar{c}$	mean aerodynamic chord, feet
$x/\bar{c}$	ratio of distance of center of gravity rearward of leading edge of mean aerodynamic chord to mean aerodynamic chord
$z/\bar{c}$	ratio of distance between center of gravity and fuselage reference line to mean aerodynamic chord (positive when center of gravity is below fuselage reference line)
m	mass of airplane, slugs
I_X, I_Y, I_Z	moments of inertia about X-, Y-, and Z-body axes respectively, slug-feet^2
$\frac{I_X - I_Y}{mb^2}$	inertia yawing-moment parameter
$\frac{I_Y - I_Z}{mb^2}$	inertia rolling-moment parameter
$\frac{I_Z - I_X}{mb^2}$	inertia pitching-moment parameter
ρ	air density, slugs per cubic foot
μ	relative density of airplane $\left(\frac{m}{\rho S b}\right)$
α	angle between fuselage reference line and vertical (approximately equal to absolute value of angle of attack at plane of symmetry), degrees
ϕ	angle between span axis and horizontal, degrees
V	full-scale true rate of descent, feet per second
Ω	full-scale angular velocity about spin axis, revolutions per second

APPARATUS AND METHODS

Model

An airplane model available at the Langley Laboratory was modified in dimensions and mass loading to simulate the XF3D-1 airplane. In modifying the model, a scaled-down version of the XF3D-1 tail was installed and proper adjustments of the nose and tail lengths were made. The similarity between the model tested and the XF3D-1 airplane design may be seen from the comparison three-view drawing on figure 1 and in the list of dimensional characteristics in table I. The dimensional differences in the original ailerons and the XF3D-1 ailerons, both of which were tested on the model, may be seen in the sketch on figure 2 and in table I. Photographs of the model in the clean condition after all modifications were made, including the installation of the XF3D-1 ailerons, are shown in figure 3. Photographs of the model with the slow-down brakes in the fully open position are shown in figure 4.

The model was ballasted with lead weights to obtain dynamic similarity to the XF3D-1 airplane at an altitude of 33,400 feet (ρ = 0.000783 slug per cubic foot). A lower test altitude was not used because of difficulty encountered in ballasting the model. The loading and wing area were such that the model represented a $\frac{1}{31.4}$-scale model of the subject airplane.

A remote-control mechanism was installed in the model to actuate the rudder for recovery tests.

Wind Tunnel and Testing Technique

The tests were performed in the Langley 20-foot free-spinning tunnel, the operation of which is generally similar to that described in reference 1 for the Langley 15-foot free-spinning tunnel except that the model-launching technique has been changed. With the controls set in the desired position, the model is launched by hand with rotation into the vertically rising air stream. A photograph which shows the test section of the Langley 20-foot free-spinning tunnel and a model spinning in the tunnel is shown in figure 5. After a number of turns in the established spin, the recovery attempt is made by moving one or more controls by means of the remote-control mechanism. After recovery, the model dives into a safety net. The spin data obtained from these tests are then converted to corresponding full-scale values by methods described in reference 1.

In accordance with standard spin-tunnel procedure, tests were performed to determine the spin and recovery characteristics of the model for the normal-spinning control configuration (elevator full up, ailerons neutral, and rudder full with the spin) and for various other aileron-elevator combinations including neutral and maximum settings of the surfaces. Recovery was generally attempted by rapid reversal of the rudder from full with to full against the spin. Tests were also performed to evaluate the possible adverse effects on recovery of small deviations from the normal control configuration for spinning. For these tests, the elevator was set at two-thirds of its full-up deflection and the ailerons were set at one-third of full deflection in the direction conducive to slower recoveries (against the spin for the XF3D-1 airplane). Recovery from this spin was attempted by rapidly reversing the rudder from full with to two-thirds against the spin. This particular control configuration and manipulation is referred to as the "criterion spin."

Turns for recovery are measured from the time the controls are moved to the time the spin rotation ceases. The criterion for a satisfactory recovery from a spin for the model has been adopted as 2 turns or less, based primarily on the loss of altitude of the airplane during the recovery and subsequent dive. Recovery characteristics of the model may be considered satisfactory, however, if recovery attempted from the criterion spin in the manner previously described requires only $2\frac{1}{4}$ turns.

For recovery attempts in which the model struck the safety net before recovery could be effected because of an unusually high rate of descent, the number of turns from the time the controls were moved to the time the model struck the safety net were recorded. This number indicated that the model required more turns to recover from the spin than shown, as for example >3. A >3-turn recovery, however, does not necessarily indicate an improvement when compared to a >7-turn recovery. A recovery attempt in which the model failed to recover in less than 10 turns is indicated by ∞. Some recovery attempts were made before the model had lost all of the rotational energy imparted to it when launched in the air stream. Such recovery data are noted as "recovery attempted before model reached its final steep attitude." Recovery results so obtained are considered conservative; that is, the recoveries are somewhat slower than those that would have been obtained had the model been in its final steep spin attitude.

PRECISION

The spin results presented herein are believed to be the true values given by the model within the following limits:

α, degree	±1
ϕ, degree	±1
V, percent	±5
Ω, percent	±2
Turns for recovery	±1/4 turn, obtained from motion-picture records

The preceding limits may have been exceeded for certain spins in which it was difficult to control the model in the tunnel because of its high rate of descent.

Comparison between model and airplane spin results (references 1 and 2) indicates that spin-tunnel results are not always in complete agreement with airplane spin results. In general, the models spun steeper, at a somewhat higher rate of descent, and at from 5° to 10° more outward sideslip than did the corresponding airplanes. The comparison made in reference 2 for 20 airplanes showed that, for 16 of the models, the tests predicted adequately the corresponding airplane recovery characteristics. For two of the models tested, the recovery results were conservative and for two of the models, the results were optimistic.

Because of the impracticability of exact ballasting of the model, the measured moments of inertia varied from the true scaled-down values by the following amounts:

I_X	3 low
I_Y	2 low
I_Z	4 low

The accuracy of measuring the weight and mass distribution of the model is believed to be within the following limits:

Weight, percent	±1
Center-of-gravity location, percent $\bar{c}$	±1
Moments of inertia, percent	±5

Control settings were made with an accuracy of ±1°.

TEST CONDITIONS

Mass characteristics and mass parameters for the normal gross-weight loading condition and other loading conditions possible on the XF3D-1 airplane, as well as for the loading tested on the model, are listed in table II. The mass distribution parameters for these loadings are plotted on figure 6. As discussed in reference 3, figure 6 can be used in predicting the relative effectiveness of the controls on the recovery characteristics of an airplane.

Tail-damping power factor was computed by the method described in reference 4 and was 1060×10^{-6} for the XF3D-1 airplane and 1204×10^{-6} for the model tested. Spin-tunnel experience indicates little significance of such a difference in tail-damping power factor when the actual values are relatively high, as these are.

For most of the tests, the maximum control deflections used were:

Rudder, degrees	25 right, 25 left
Elevator, degrees	25 up, 15 down
Ailerons, degrees	15 up, 15 down

The corresponding intermediate control deflections used were:

Rudder 2/3 deflected, degrees	$16\frac{2}{3}$
Elevator 2/3 up, degrees	$16\frac{2}{3}$
Ailerons 1/3 deflected, degrees	5 up, 5 down

For the brief tests in which the XF3D-1 aileron design was incorporated into the model, the aileron-up deflections were 20° (maximum) and $6\frac{1}{3}$° (intermediate).

RESULTS AND DISCUSSION

The results of the tests made with the model in the clean condition for the normal gross-weight loading with the original ailerons installed on the model are presented in table III. The results of the tests made with the XF3D-1 ailerons simulated on the model were similar to those obtained when the original ailerons were installed and are not presented in tabular form. The tests made with the slow-down brakes in the open position were very brief and these results are also not presented in tabular form.

Due, apparently, to a slight asymmetry in the model, the test results for right and left spins were sometimes slightly different and, although the results are presented for the direction of spin which gave the somewhat slower recoveries (arbitrarily presented as right spins), they are considered as representative of the airplane for spins in either direction. Because of the relatively high equivalent test altitude used for this model, the results obtained are considered somewhat conservative.

Normal Gross-Weight Loading

Clean condition.- For the clean condition, normal gross-weight loading (table III), the model spun at a steep attitude and with a rapid rate of descent, and satisfactory recoveries were effected by rapid reversal of the rudder. In general, the effects of setting ailerons against the spin and of moving the elevator down were adverse, causing flatter spins and slower recoveries. Experience indicates that, in order to promote recovery in a dive, it is desirable that the stick be moved forward of neutral. In order to avoid shielding the rudder during rudder reversal, however, it appears that the rudder should be fully reversed before the stick is moved forward. For the airplane, recovery should be made by full rapid rudder reversal followed approximately 1/2 turn later by moving the stick forward of neutral while maintaining it laterally neutral. Care should be exercised to avoid entering a spin in the opposite direction following rudder reversal and recovery.

Slow-down brakes open.- With the slow-down brakes in the fully open position for the normal gross-weight loading when the controls were set at the criterion configuration, the model spun at an angle of attack of about 41° and descended at a rate of 342 feet per second. No recovery was obtained from the spin.

If a spin is inadvertently entered while the slow-down brakes of the XF3D-1 airplane are open, the brakes should be retracted immediately and recovery attempted.

Landing condition.- Current Navy specifications require airplanes in the landing condition to demonstrate satisfactory recovery characteristics from only 1-turn spins. Experience indicates that a spinning airplane is still in the incipient phase of the spin at the end of 1 turn and that recovery can then be readily obtained.

An analysis of the results of spin tests of scale models of many airplanes, and of available airplane flight data concerning

the effect of flaps and landing gear indicates that the XF3D-1 airplane will recover satisfactorily from a 1-turn incipient spin in the landing condition. However, if spins in the landing condition are allowed to develop fully, they may become flat and recoveries may be slow. It is thus recommended that, in the landing condition for this airplane, all fully developed spins be avoided and that landing flaps be retracted and recovery attempted immediately upon inadvertently entering a spin in the landing condition.

Mass Variations from the Normal Gross-Weight Loading

The mass parameters for the various loadings specified by the contractor as possible for the XF3D-1 airplane are not appreciably different from those of the normal gross-weight loading. The analysis of reference 4 indicates that the tail-damping power factor and the mass characteristics of the airplane are such that the recovery characteristics should remain satisfactory for any probable loading. The effects of control settings and movements on the spins and recoveries should, in general, be the same as those for the normal gross-weight loading.

Inverted Spins

Based on the results of inverted-spin tests of over 40 airplane models in the free-spinning tunnel (reference 5), satisfactory recoveries can be obtained from all inverted spins that the XF3D-1 airplane may enter. To effect a recovery, the rudder should be briskly and fully reversed to oppose the spin rotation and the stick should be neutralized.

Estimated Control Forces

The discussion so far has been based on control effectiveness alone without regard to the force required to move the controls. The controls of the airplane will have to be moved rapidly in order for the airplane recoveries to be comparable to the model test results and the airplane estimations. Based on the results of a recent investigation (reference 6) in which the force necessary to reverse the rudder of an airplane having a tail design somewhat similar to that of the XF3D-1 was measured during static tests of the model in attitudes simulating spinning conditions, it is estimated that the force necessary to reverse the rudder of the XF3D-1 airplane during a spin will be under 200 pounds, which is within the physical capabilities of the pilot.

No estimate has been made of the stick force inasmuch as rudder reversal alone effected satisfactory recovery. It is felt that the force required to move the stick forward of neutral approximately 1/2 turn after rudder reversal, as recommended, will be within the capabilities of the pilot inasmuch as after the rudder reversal the airplane will nose down steeply and the elevator will therefore tend to float near neutral.

Estimated Spin-Recovery-Parachute Requirements

Based on a recent analysis of results of tests made on models in the free-spinning tunnel, it is estimated that the opening of a 10-foot-diameter flat-type parachute with a drag coefficient of 0.7 and attached to the tail of the airplane with a 30-foot towline will effect satisfactory spin recovery even if the rudder is not moved against the spin. A positive-ejection device should be used to throw the parachute pack clear of the tail and to assure rapid opening. Various practical tail-parachute installations are described in reference 7.

It is estimated that opening a 4.5-foot-diameter flat-type parachute with a drag coefficient of 0.7 and with the towline attached to the outer wing tip will also effect satisfactory spin recovery without movement of the rudder. The length of the towline should be such that the parachute when fully extended just clears the horizontal tail. The parachute pack and equipment should be mounted within the airplane structure and a positive-ejection device should be used to throw the pack clear and to assure rapid opening of the parachute.

Emergency Crew Escape

Because the cockpit of the XF3D-1 airplane is located ahead of the leading edge of the wing, an additional hazard exists as regards emergency escape during a spin, inasmuch as the crew will have to clear the wing of the airplane as well as the tail. This hazard is particularly existent for those spins in which the rate of descent indicated for the airplane is greater than the terminal velocity of a man, as is the case for the XF3D-1, for the man will have to rise past the descending wing and may therefore be struck. In order to insure that the crew members can leave the airplane without being struck, an ejection system may be desirable. A recent analysis of results of tests in which model pilots were released for approximately 20 airplane models indicates that if no ejection system is provided and it becomes necessary to abandon the

airplane, the crew should leave from the outboard side. There should be no obstruction in the cockpit between the pilot and the radar operator, so that they both can leave the airplane from the outboard side in a spin.

CONCLUSIONS

Based on tests of a model simulating the XF3D-1 airplane design, and on spin-tunnel experience, the following conclusions are made concerning the probable spin and recovery characteristics of the airplane:

1. For any of the loadings specified by the contractor as possible for the airplane, the spin obtained for the normal-spinning control configuration for the clean condition will be steep and the recoveries will be fast.

2. For fast recoveries from erect spins, the stick should be held full back and laterally neutral, and the rudder should be fully and rapidly reversed; approximately 1/2 turn after rudder reversal, the stick should be briskly moved forward of neutral and maintained laterally neutral. For satisfactory recoveries from inverted spins the rudder should be reversed and the stick neutralized.

3. Recoveries from spins with the slow-down brakes open will be slow and recoveries from fully developed spins in the landing condition may be slow. Slow-down brakes or landing flaps should be retracted immediately upon entering a spin.

4. The force necessary to reverse the rudder during a spin will be within the physical capabilities of the pilot.

5. Opening a 10-foot-diameter tail parachute or a 4.5-foot-diameter parachute on the outer wing tip (flat-type parachute with drag coefficient of 0.7) will provide satisfactory spin recovery.

6. If it is necessary for the crew to abandon the airplane during a spin, they should attempt to escape from the outboard side of the cockpit.

Langley Memorial Aeronautical Laboratory
National Advisory Committee for Aeronautics
Langley Field, Va.

Stanley H. Scher
Stanley H. Scher
Aeronautical Engineer

Approved by: Thomas A. Harris
for
Hartley A. Soulé
Chief of Stability Research Division

BUB

REFERENCES

1. Zimmerman, C. H.: Preliminary Tests in the N.A.C.A. Free-Spinning Wind Tunnel. NACA Rep. No. 557, 1936.

2. Seidman, Oscar, and Neihouse, A. I.: Comparison of Free-Spinning Wind-Tunnel Results with Corresponding Full-Scale Spin Results. NACA MR, Dec. 7, 1938.

3. Neihouse, A. I.: A Mass-Distribution Criterion for Predicting the Effect of Control Manipulation on the Recovery From a Spin. NACA ARR, Aug. 1942.

4. Neihouse, Anshal I., Lichtenstein, Jacob H., and Pepoon, Philip W.: Tail-Design Requirements for Satisfactory Spin Recovery. NACA TN No. 1045, 1946.

5. MacDougall, George F., Jr.: Tests of Inverted Spins in the NACA Free-Spinning Tunnels. NACA ARR No. 3L02, 1943.

6. Stone, Ralph W., Jr., and Burk, Sanger M., Jr.: Hinge-Moment Characteristics of a Balanced Elevator and Rudder for a Specific Tail Configuration on a Fuselage in Spinning Attitudes. NACA TN No. , 1947.

7. Seidman, Oscar, and Kamm, Robert W.: Antispin-Tail-Parachute Installations. NACA RB, Feb. 1943.

SUPPLEMENTARY REFERENCES

1. Douglas Aircraft Co., Inc., Drawing no. 5258918: General Arrangement 3 View. – XF3D-1 Airplane.

2. Strand, W. H.: Airplane Weight Distribution, Model XF3D-1. Rep. no. E.S. 20577, Douglas Aircraft Co., Inc., May 28, 1946.

3. Strand, W. H.: Estimated Airplane Moments of Inertia, Model XF3D-1. Rep. no. E.S. 20593, Douglas Aircraft Co., Inc., May 31, 1946.

[redacted]

TABLE I.– DIMENSIONAL CHARACTERISTICS OF THE XF3D-1 AIRPLANE

AND OF THE MODEL AS MODIFIED TO REPRESENT THE AIRPLANE

(DIMENSIONS ARE FULL-SCALE)

	XF3D-1	Model as tested	
Over-all length, ft	45.38	45.38	
Wing:			
Span, ft	50	48.8	
Area, sq ft	400	400	
Section, root	NACA 1412-64	65_1-110	
Section, tip	NACA 1412-64	65_1-110	
Root (reference)chord incidence, deg	5	2.5	
Tip chord incidence, deg	3	1.5	
Aspect ratio	6.25	6.0	
Sweepback of leading edge of projected wing, deg	5.35	5.05	
Dihedral leading-edge chord line, deg	3.0	0	
Length of mean aerodynamic chord, in.	99.5	100.5	
		With original ailerons	With XF3D-1 ailerons
Ailerons:			
Chord (rearward of hinge line), percent of wing chord	22	15	22
Area (rearward of hinge line), percent of wing area	8.7	4.8	8.7
Span, percent of wing span	45.0	41.4	45.0
Horizontal tail surfaces:			
Incidence from fuselage reference line, deg	Leading edge 3.5 up to 0	3.5 up	
Total area, sq ft	92.56	92.56	
Span, ft	20.5	20.5	
Elevator area (rearward of hinge line), sq ft	24.74	24.74	
Distance from center of gravity to elevator hinge line, ft	24.40	24.40	
Vertical tail surfaces:			
Total area, sq ft	49.7	49.7	
Rudder area (rearward of hinge line), sq ft	11.46	11.46	
Distance from center of gravity to rudder hinge line, ft	22.27	22.27	
Tail-damping power factor (Computed by method described in reference 2)	0.001060	0.001204	
Tail-damping ratio (Computed by method described in reference 2)	0.050700	0.0608	
Unshielded rudder volume coefficient (Computed by method described in reference 2)	0.021000	0.0198	

[redacted]

NATIONAL ADVISORY
COMMITTEE FOR AERONAUTICS

[redacted]

TABLE II.– MASS CHARACTERISTICS AND MASS PARAMETERS FOR VARIOUS LOADINGS SPECIFIED AS POSSIBLE ON THE XF3D-1 AIRPLANE AND FOR THE LOADING TESTED ON THE MODEL

No.	Loading	Weight (lb)	μ sea level	μ at 33,400 ft	Center-of-gravity location		Moments of inertia about the center of gravity			Mass parameters		
					$x/\bar{c}$	$z/\bar{c}$	I_X (slug-ft^2)	I_Y (slug-ft^2)	I_Z (slug-ft^2)	$\frac{I_X - I_Y}{mb^2}$	$\frac{I_Y - I_Z}{mb^2}$	$\frac{I_Z - I_X}{mb^2}$
Airplane values												
1	Normal gross weight	21,500	14.0	42.5	0.231	-0.031	16,602	40,651	53,807	-144×10^{-4}	-79×10^{-4}	223×10^{-4}
2	Design flight gross weight; nose heavy	18,100	11.8	35.8	.180	.01	15,918	40,724	54,003	-177	-94	271
3	Design landing gross weight; tail heavy (gear down)	16,200	10.6	32.2	.295	.031	15,467	36,876	49,136	-170	-98	268
Model values converted to full-scale values												
1	Normal gross weight	21,500	14	42.5	0.231	-0.031	16,115	39,798	51,860	-142×10^{-4}	-72×10^{-4}	214×10^{-4}

[redacted]

NATIONAL ADVISORY
COMMITTEE FOR AERONAUTICS

[redacted]

TABLE III.– SPIN AND RECOVERY CHARACTERISTICS OF A MODEL

MODIFIED TO SIMULATE THE DOUGLAS XF3D-1 AIRPLANE

[Normal gross-weight loading (point 1 on table II and fig. 6) original ailerons installed; recovery by rapid full rudder reversal except as noted; recovery attempted from, and steady-spin data presented for, rudder full-with spins; right erect spins; model values are given in terms of corresponding full-scale values]

Ailerons	Against				Neutral			With	
	Full			1/3					
Elevator	Up	Neutral	Down	2/3 Up (a)	Up (a)	Neutral (a)	Down	Up (af)	Down (a)
α, deg	41	--	43	--	--	--	28	--	--
ϕ, deg	4U	--	4U	--	--	--	1U	--	--
Ω, rps	--	0.30	0.37	--	--	--	--	--	--
V, fps	Approx. 417	367	350	>465	>426	>484	Approx. 426	>476	>476
Turns for recovery	$1\frac{1}{4}$ $1\frac{3}{4}$ $2\frac{3}{4}$	$4\frac{3}{4}$ >6	7 ∞	b,c,d $\frac{1}{4}$ b,c,d $\frac{3}{4}$	b,d $\frac{1}{2}$ b,d 1	d 1 d $1\frac{3}{4}$	e $2\frac{3}{4}$ e 3	d $\frac{1}{8}$ d $\frac{1}{2}$	d,g $\frac{3}{4}$ d,g 1

[a]Steep spin.
[b]Model tended to turn in opposite direction after recovery.
[c]Recovery attempted by reversing rudder from full with to 2/3 against the spin.
[d]Recovery attempted before model reached its final steep attitude.
[e]Model dived out inverted.
[f]Model made periodic whipping motion.
[g]Model went into inverted spin upon recovery.

U and D signify inner wing up or down, respectively, in developed spin.

[redacted]

NATIONAL ADVISORY
COMMITTEE FOR AERONAUTICS

[redacted]

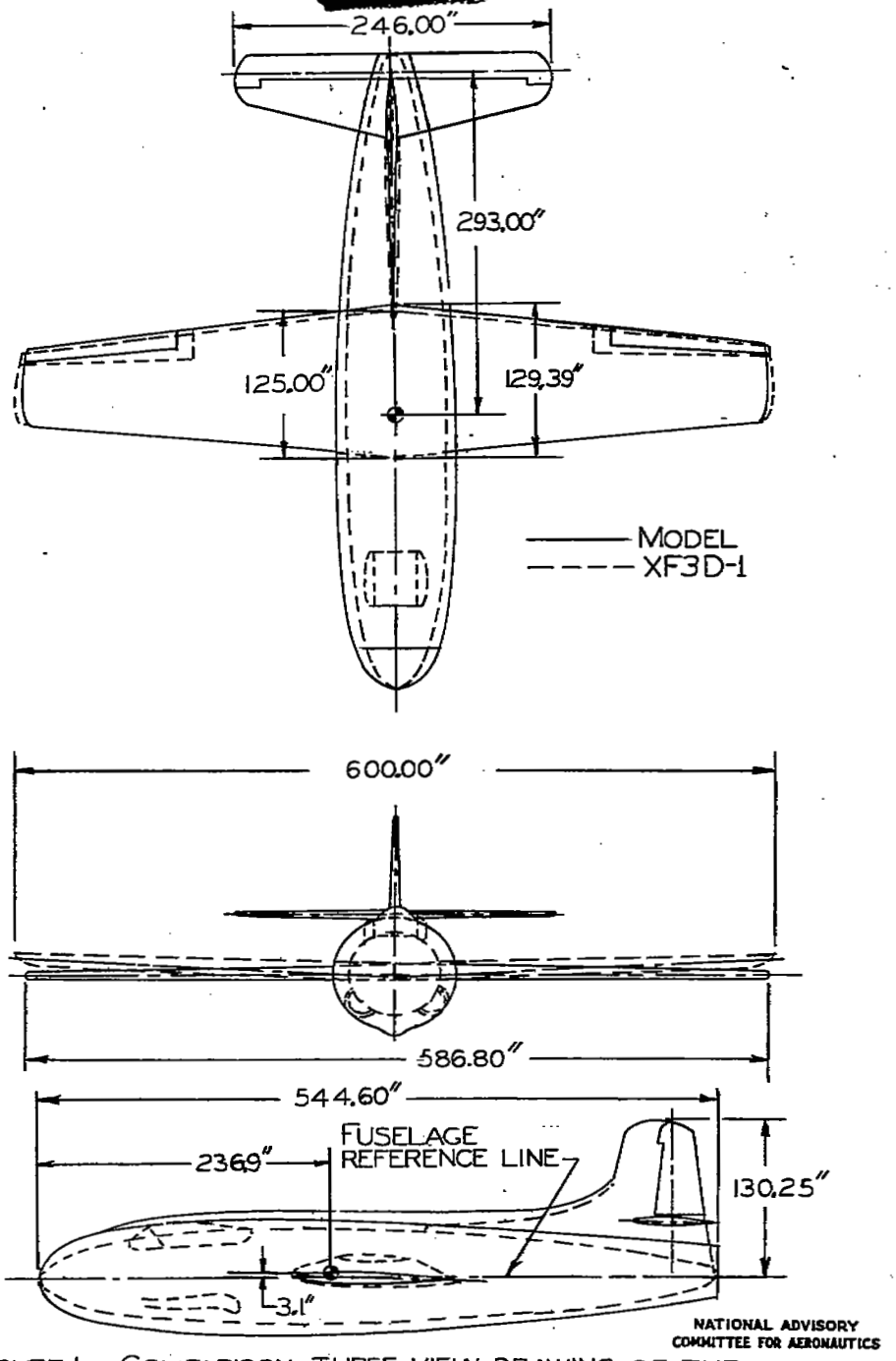

FIGURE 1.—COMPARISON THREE-VIEW DRAWING OF THE DOUGLAS XF3D-1 AIRPLANE AND OF THE MODIFIED MODEL WHICH WAS USED TO SIMULATE THE AIRPLANE. DIMENSIONS ARE FULL-SCALE.

[redacted]

[redacted]

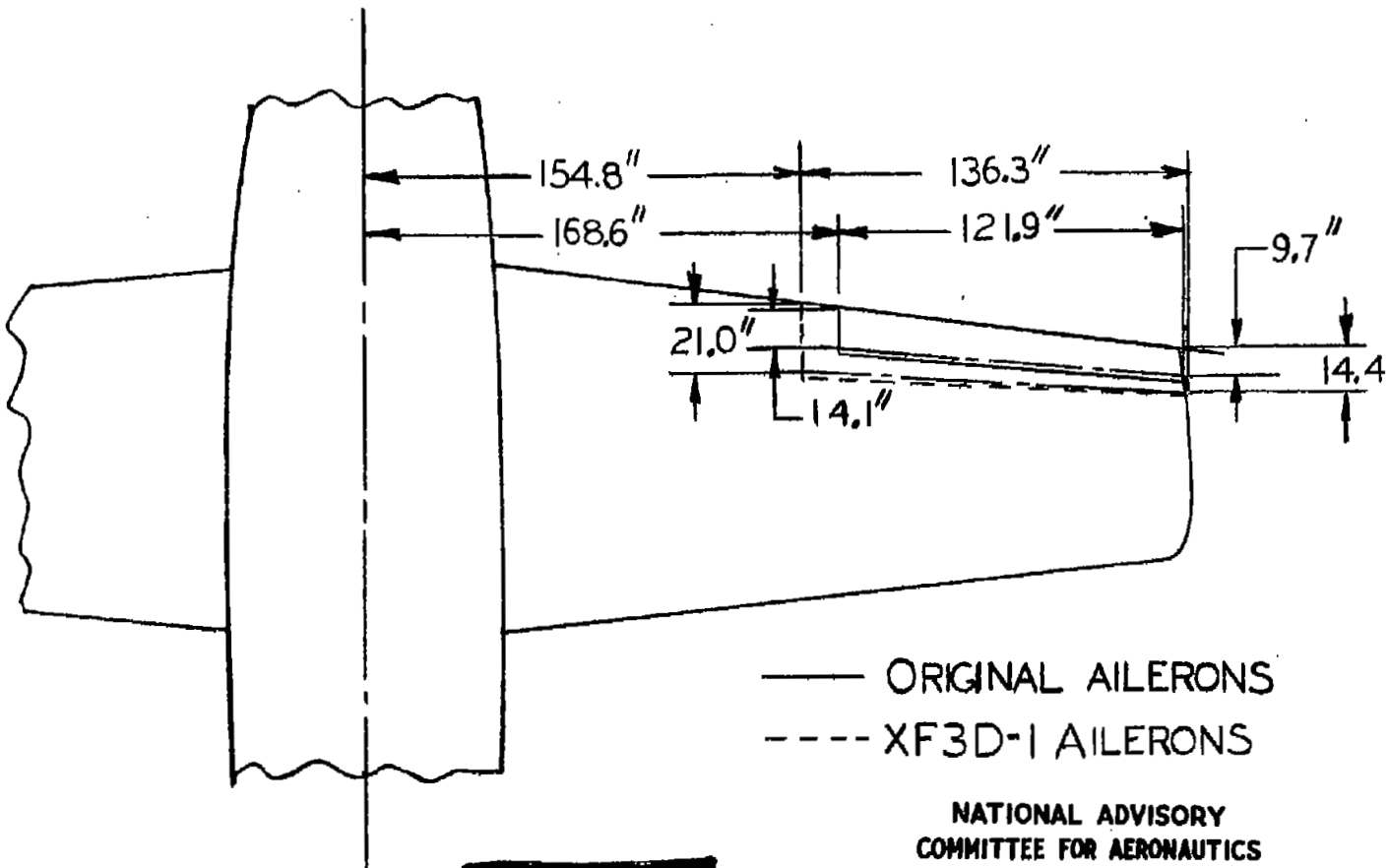

NATIONAL ADVISORY
COMMITTEE FOR AERONAUTICS

[redacted]

FIGURE 2.—SKETCH SHOWING DIMENSIONAL DIFFERENCES IN THE TWO SIZES OF AILERONS TESTED ON THE MODEL. DIMENSIONS ARE FULL-SCALE.

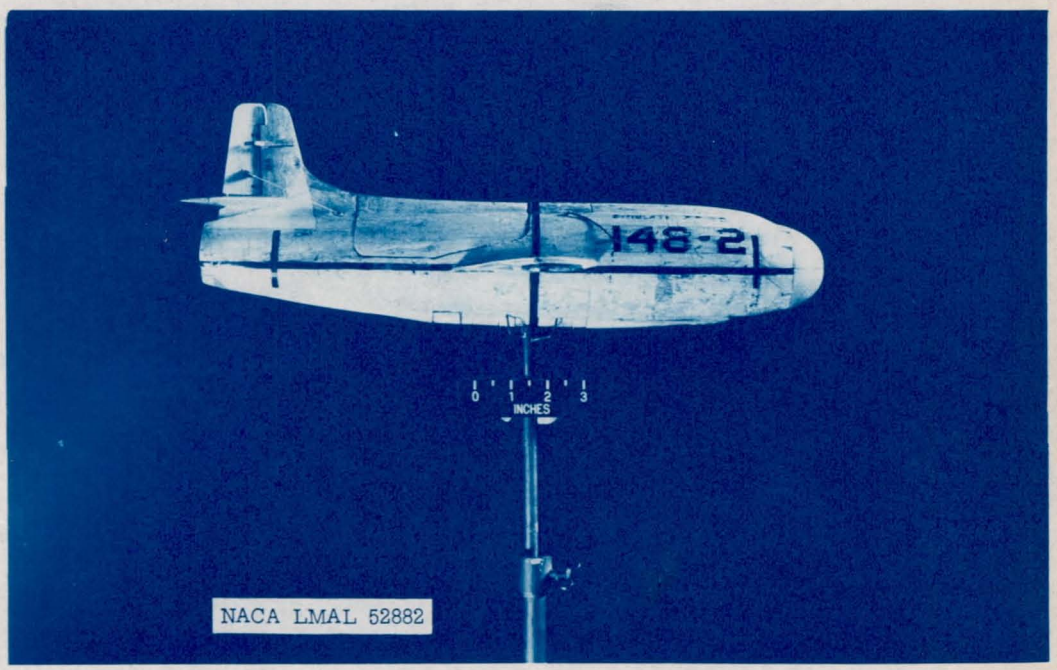

Figure 3.- Photographs of the modified model used to simulate a $\frac{1}{31.4}$-scale model of the Douglas XF3D-1 airplane in the free-spinning tunnel. The model is shown in the clean condition.

NATIONAL ADVISORY COMMITTEE FOR AERONAUTICS
LANGLEY MEMORIAL AERONAUTICAL LABORATORY - LANGLEY FIELD, VA.

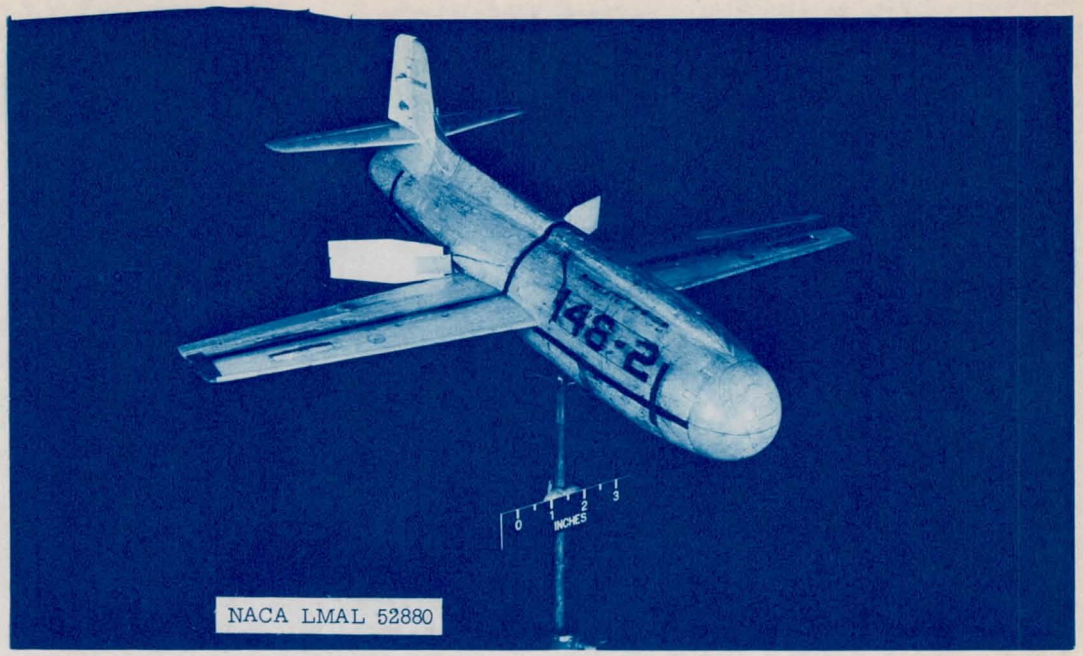

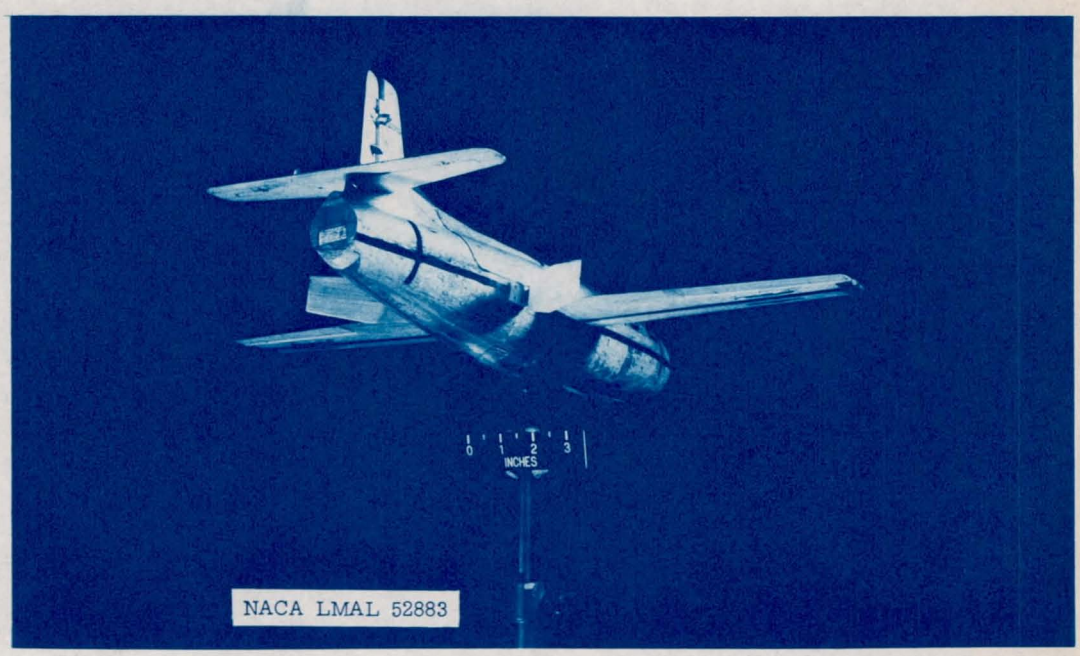

Figure 4.- Photographs of the modified model used to simulate a $\frac{1}{31.4}$-scale model of the Douglas XF3D-1 airplane in the free-spinning tunnel. The model is shown with the slow-down brakes in the fully open position.

NATIONAL ADVISORY COMMITTEE FOR AERONAUTIC
LANGLEY MEMORIAL AERONAUTICAL LABORATORY - LANGLEY FIELD, VA.

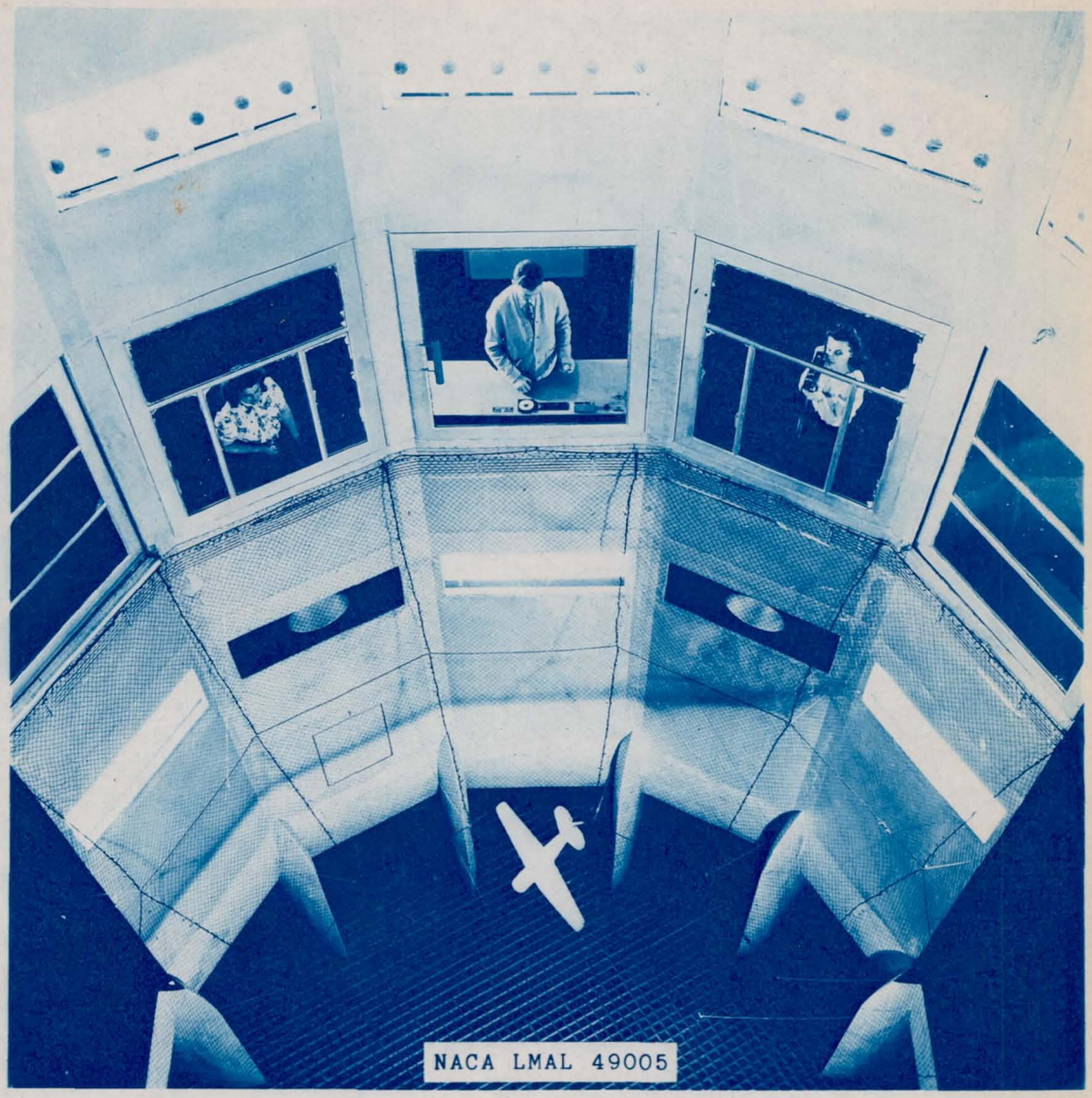

Figure 5.- Photograph showing the test section of the 20-foot free-spinning tunnel and a model spinning in the tunnel.

NATIONAL ADVISORY COMMITTEE FOR AERONAUTICS
LANGLEY MEMORIAL AERONAUTICAL LABORATORY - LANGLEY FIELD, VA.

[redacted]

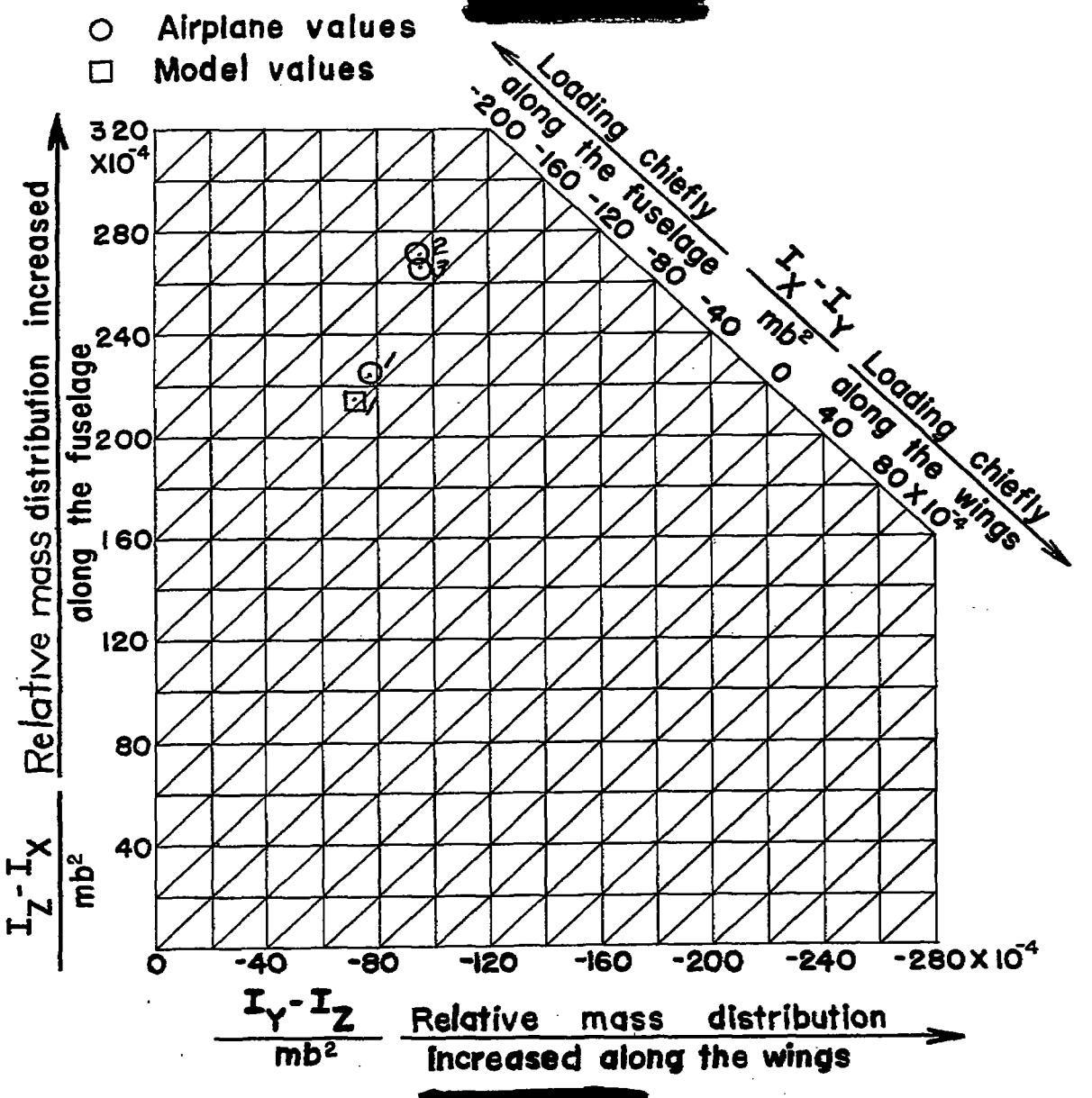

[redacted]

Figure 6.- Inertia parameters for loadings possible on the Douglas XF3D-1 airplane and for the loading used on the model (points are for loadings listed on table II).

NATIONAL ADVISORY COMMITTEE FOR AERONAUTICS