NASA's PEM Fuel Cell Power Plant Development Program for Space Applications

Mark Hoberecht

NASA embarked on a PEM fuel cell power plant development program beginning in 2001. This five-year program was conducted by a three-center NASA team of Glenn Research Center (lead), Johnson Space Center, and Kennedy Space Center. The program initially was aimed at developing hardware for a Reusable Launch Vehicle (RLV) application, but more recently had shifted to applications supporting the NASA Exploration Program. The first phase of the development effort, to develop breadboard hardware in the 1-5 kW power range, was conducted by two competing vendors. The second phase of the effort, to develop Engineering Model hardware at the 10 kW power level, was conducted by the winning vendor from the first phase of the effort. Both breadboard units and the single engineering model power plant were delivered to NASA for independent testing. This poster presentation will present a summary of both phases of the development effort, along with a discussion of test results of the PEM fuel cell engineering model under simulated mission conditions.

NASA's PEM Fuel Cell Power Plant Development Program for Space Applications

Mark Hoberecht
NASA Glenn Research Center
Cleveland, Ohio

2006 Fuel Cell Seminar
Honolulu, HI

NASA's Fuel Cell History

- Fuel cells were/are primary electrical power source for numerous manned NASA missions
  - Gemini (PEM)
  - Apollo (PEM)
  - Shuttle (Alkaline)
- During first 20 years of Shuttle operation, PEM fuel cell technology underwent only minor development for space applications
  - Commercial technology was initiated during this time and has grown exponentially since

NASA's PEM Fuel Cell Development Program

- In 2001, NASA recognized advantages of PEM fuel cell technology over alkaline technology and embarked on 5-year PEM fuel cell power plant development program
  - Program conducted by 3-center NASA team of Glenn Research Center (lead), Johnson Space Center, and Kennedy Space Center
- NASA is leveraging technology advances from commercial sector in developing PEM fuel cell technology for space applications, with two major modifications
  - Space PEM fuel cells must operate with pure oxygen as oxidant, rather than air
  - Space PEM fuel cells must accommodate product water removal and separation in multi-gravity environment
    - Zero-gravity
    - High acceleration loads

PEM Fuel Cell Advantages

- Advantages of PEM fuel cell technology over alkaline technology include:
  - Enhanced safety
  - Increased robustness
  - Higher peak power levels
  - Longer life
  - Lower weight
  - Improved reliability and maintainability
  - Reduced ground and mission operations support requirements
  - Ability to share common reactants/tankage with hydrogen-oxygen propulsion systems
  - Lower cost

Breadboard Effort

- First phase of effort was Breadboard power plant development
  - Contracts awarded to two competing vendors
    - ElectroChem, Inc.
    - Teledyne Energy Systems, Inc.
  - 1-5 kW power level
  - Off-the-shelf hardware

Breadboard Effort

Vendor	ElectroChem	Teledyne
Nominal Power (kW)	1.0	5.0
Number of Cells	45	82
Cell Active Area (cm^2)	232	302
Nominal Current Density (mA/cm^2)	110	270
Peak Power Capability (peak:nominal)	6:1	>6:1
Reactant Recirculation Approach	Passive (ejectors)	Active (pumps)

Breadboard Power Plant Comparison

Breadboard Effort

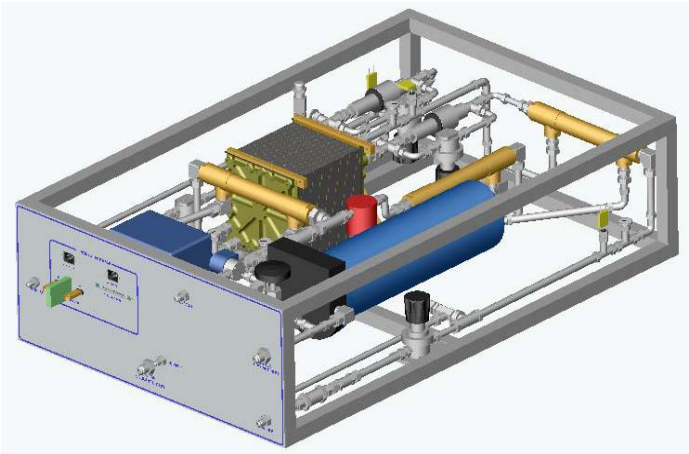

ElectroChem Breadboard Schematic

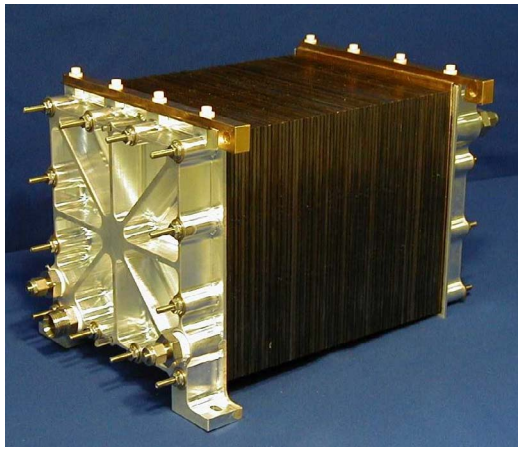

ElectroChem Fuel Cell Stack

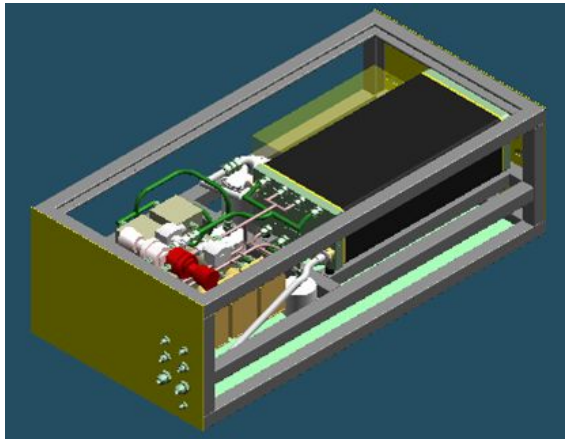

Teledyne Breadboard Schematic

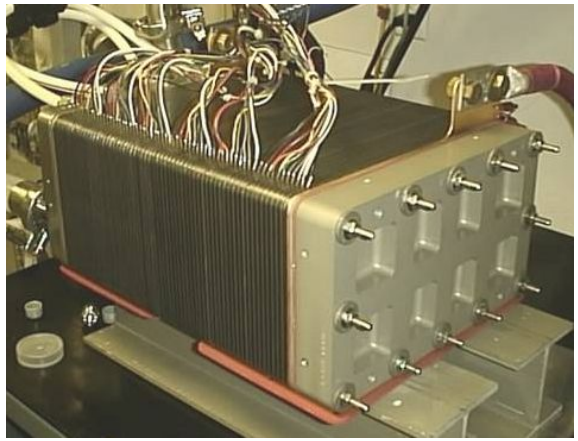

Teledyne Fuel Cell Stack

Breadboard Effort

- After design and fabrication, Breadboard power plant from each vendor delivered to NASA for independent testing
  - Multiple load profiles
  - Polarization curves
  - Start-up and shut-down testing
  - Limited endurance testing
- Based on test results, Teledyne selected for Engineering Model portion of program

Engineering Model Effort

- Second phase of effort was Engineering Model power plant development
  - Contract option exercised with single Breadboard vendor
    - Teledyne Energy Systems, Inc.
  - 7-10 kW power level
  - Higher fidelity hardware, suitable for testing in “relevant” environment
    - Thermal vacuum testing
    - Vibration testing

Engineering Model Effort

Requirement	Goal
Nominal Power (kW)	7-10
Voltage Regulation (V)	30 ± 10%
Voltage Response Time (s)	<0.2
Operating Life (hrs)	10,000
Operating Temperature (° C)	60-80
Operating Pressure (kPa)	<690
Power Plant Weight (kg)	<140
Power Plant Volume (m^3)	<0.2

Engineering Model Power Plant Key Requirements

Engineering Model Effort

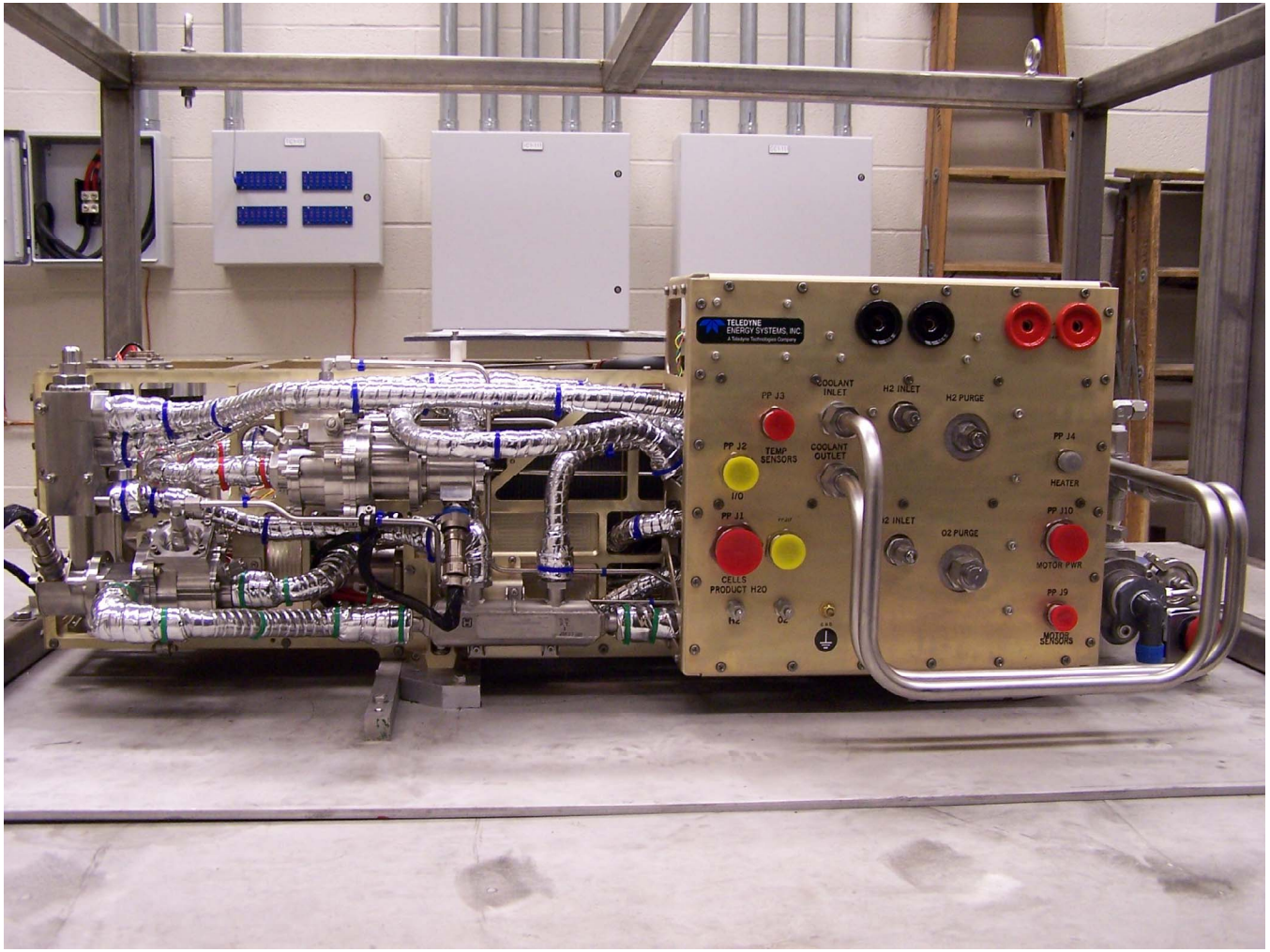

Teledyne Engineering Model Power Plant

Engineering Model Effort

- Engineering Model power plant fully met all program goals, except for 25% excess in power plant weight
  - Schedule and cost constraints prevented further reductions in balance-of-plant weight
- After design and fabrication, Engineering Model power plant delivered to NASA for independent testing
  - Multiple load profiles
  - Polarization curves
  - Start-up and shut-down testing
  - Mission profile tests
  - Loss-of-coolant tests
  - Multiple orientation testing
  - Environmental testing
  - Limited endurance testing
- Tests still ongoing

Summary

- NASA is nearing completion of 5-year PEM fuel cell power plant development program
  - Program conducted by 3-center NASA team of Glenn Research Center (lead), Johnson Space Center, and Kennedy Space Center
- NASA has adapted commercial PEM fuel cell technology for space applications, with two key modifications:
  - Pure oxygen used as oxidant
  - Product water removal and separation in multi-gravity environment
- Competing vendors developed Breadboard power plants in 1-5 kW power range
- Single vendor selected to develop 7-10 kW Engineering Model power plant
  - Not yet flight-hardware fidelity, but similar in form, fit, and function
  - NASA successfully conducted independent performance and environmental tests
- Further improvements are underway
  - Lightweight/high-efficiency fuel cell stack development
  - Passive ancillary component development