NASA/TM—2007–214851

Liquid-Metal Pump Technologies for Nuclear Surface Power

K.A. Polzin
Marshall Space Flight Center, Marshall Space Flight Center, Alabama

March 2007

The NASA STI Program…in Profile

Since its founding, NASA has been dedicated to the advancement of aeronautics and space science. The NASA Scientific and Technical Information (STI) Program Office plays a key part in helping NASA maintain this important role.

The NASA STI program operates under the auspices of the Agency Chief Information Officer. It collects, organizes, provides for archiving, and disseminates NASA's STI. The NASA STI program provides access to the NASA Aeronautics and Space Database and its public interface, the NASA Technical Report Server, thus providing one of the largest collections of aeronautical and space science STI in the world. Results are published in both non-NASA channels and by NASA in the NASA STI Report Series, which includes the following report types:

- TECHNICAL PUBLICATION. Reports of completed research or a major significant phase of research that present the results of NASA programs and include extensive data or theoretical analysis. Includes compilations of significant scientific and technical data and information deemed to be of continuing reference value. NASA's counterpart of peer-reviewed formal professional papers but has less stringent limitations on manuscript length and extent of graphic presentations.

- TECHNICAL MEMORANDUM. Scientific and technical findings that are preliminary or of specialized interest, e.g., quick release reports, working papers, and bibliographies that contain minimal annotation. Does not contain extensive analysis.

- CONTRACTOR REPORT. Scientific and technical findings by NASA-sponsored contractors and grantees.

- CONFERENCE PUBLICATION. Collected papers from scientific and technical conferences, symposia, seminars, or other meetings sponsored or cosponsored by NASA.

- SPECIAL PUBLICATION. Scientific, technical, or historical information from NASA programs, projects, and missions, often concerned with subjects having substantial public interest.

- TECHNICAL TRANSLATION. English-language translations of foreign scientific and technical material pertinent to NASA's mission.

Specialized services also include creating custom thesauri, building customized databases, and organizing and publishing research results.

For more information about the NASA STI program, see the following:

- Access the NASA STI program home page at <http://www.sti.nasa.gov>

- E-mail your question via the Internet to <help@sti.nasa.gov>

- Fax your question to the NASA STI Help Desk at 301–621–0134

- Phone the NASA STI Help Desk at 301–621–0390

- Write to:
  NASA STI Help Desk
  NASA Center for AeroSpace Information
  7115 Standard Drive
  Hanover, MD 21076–1320

NASA/TM—2007–214851

Liquid-Metal Pump Technologies for Nuclear Surface Power

K.A. Polzin
Marshall Space Flight Center, Marshall Space Flight Center, Alabama

National Aeronautics and
Space Administration

Marshall Space Flight Center • MSFC, Alabama 35812

March 2007

TRADEMARKS

Trade names and trademarks are used in this report for identification only. This usage does not constitute an official endorsement, either expressed or implied, by the National Aeronautics and Space Administration.

Available from:

NASA Center for AeroSpace Information
7115 Standard Drive
Hanover, MD 21076–1320
301–621–0390

This report is also available in electronic form at
<https://www2.sti.nasa.gov>

TABLE OF CONTENTS

1. INTRODUCTION 1

2. REQUIREMENTS AND CONSTRAINTS OF THE INVESTIGATION 3

3. REVIEW OF ELECTROMAGNETIC PUMP TECHNOLOGIES 5

3.1 Conduction Pumps 5
3.2 Induction Pumps 11
3.3 Thermoelectric Pumps 14

4. COMPARISON OF PUMPING TECHNOLOGIES 19

5. RECOMMENDATIONS, DEVELOPMENT ISSUES, AND RISK MITIGATION 21

6. CONCLUSIONS 23

REFERENCES 24

LIST OF FIGURES

1. Material properties of NaK78 as a function of temperature, from reference 2 3

2. Schematic representation of a DC conduction pump 6

3. Idealized schematic of a DC EM pump 6

4. *B*/*s* ratio as a function of desired pump pressure for varying values of pump current 7

5. Schematic representation of an AC conduction pump 10

6. Idealized schematic of an AC EM pump 10

7. (a) Conceptual schematic and (b) internal view of a FLIP 12

8. (a) Conceptual schematics and (b) internal view of an ALIP, from reference 4 12

9. TE pump design from the SP–100 reactor, from reference 10 14

10. Schematic illustration of the Seebeck effect 15

LIST OF TABLES

1. Loss mechanism scaling in conduction pumps 8

2. Performance of various EM pump designs 19

3. Primary advantages and disadvantages of different EM pumps 20

LIST OF ACRONYMS AND SYMBOLS

A	ampere
AC	alternating current
ALIP	annular linear induction pump
DC	direct current
EM	electromagnetic
EMF	electromagnetic force
FLIP	flat linear induction pump
FSP–PTC	Fission Surface Power-Primary Test Circuit
GPM	gallons per minute
Hg	mercury
K	Kelvin
kPa	kilopascal
MHD	magnetohydrodynamic
MSFC	Marshall Space Flight Center
mg/s	milligrams per second
m/s	meter per second
NaK	sodium potassium
PbTe	lead-telluride
RMS	root mean square
SiGe	silicon-germanium

LIST OF ACRONYMS AND SYMBOLS (Continued)

SIP	spiral induction pump
SNaKC	stainless steel NaK circuit
SNAP	Systems for Nuclear Auxiliary Power
TE	thermoelectric
TM	Technical Memorandum
V	volt
W/kg	watts per kilogram

NOMENCLATURE

$\mathbf{B}$	magnetic field vector
B	magnetic field
cos	cosine
d^3x	differential volume
F	force
I	current
$\mathbf{j}$	current density vector
j	magnitude of current density
l	length
max	maximum values of magnetic field, current
P	pressure
P_{IN}	input power to the pump
R	resistance
s	height
sin	sine
t	time
u	fluid velocity, flow speed
V_w	channel wall voltage drop
w	width
x	lengthwise coordinate

NOMENCLATURE (Continued)

α	Seebeck coefficient
ΔP	pressure rise across the pump
ΔT	temperature difference between thermoelectric junctions
ΔV	voltage difference between thermoelectric junctions
η	pump electrical efficiency
θ	phase difference between a time varying current and magnetic field
μ	magnetic permeability
ρ	resistivity
σ	conductivity
ω	frequency
$\dot{V}$	volumetric flow rate

TECHNICAL MEMORANDUM

LIQUID-METAL PUMP TECHNOLOGIES FOR NUCLEAR SURFACE POWER

1. INTRODUCTION

This Technical Memorandum (TM) has been compiled to support the Fission Surface Power-Primary Test Circuit (FSP–PTC) hardware demonstration effort in the Nuclear Systems Branch at NASA Marshall Space Flight Center (MSFC). It is the purpose of this TM to survey various available liquid-metal pumping technologies that could be incorporated into a flight demonstration fission surface power reactor simulator. The capability, reliability, availability, mass, and complexity associated with development and implementation of each pump option are compared. A list of the various strengths and weaknesses of each option are included in this survey, with special attention focused on identifying the primary developmental issues that would need to be addressed and resolved before deployment in a space-qualified system. The TM concludes with recommendations of pumping technologies that are best suited for inclusion in the FSP-PTC system.

2. REQUIREMENTS AND CONSTRAINTS OF THE INVESTIGATION

For this TM, the assumption is that the pressure rise and liquid-metal volume flow rate required in the FSP–PTC should be slightly greater than that produced by the systems for nuclear auxiliary power (SNAP 10A).[1] The pump requirements in quantitative terms are as follows:

- Working fluid: NaK78
- Fluid temperature: 840–800 K
- ΔP: 7.5–10 kPa
- Volume flow rate: 13.2–15 GPM
- Operational time: 1 yr nominal

For completeness, some of the relevant physical properties of NaK78 are plotted in figure 1, as a function of temperature.[2]

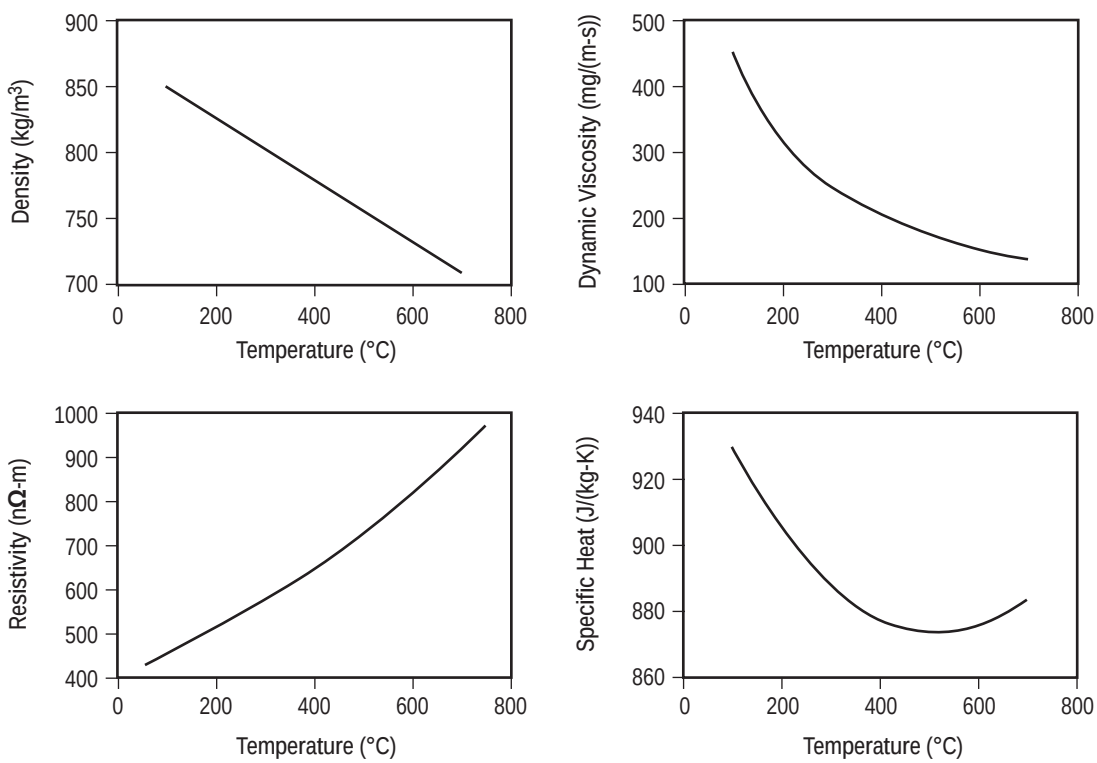

Figure 1. Material properties of NaK78 as a function of temperature, from reference 2.

The minimum pressure differential and flow rate assumed for this TM represent the operating point of the pump found on the SNAP 10A system. The liquid-metal pump must be able to operate at a nominal level for at least 1 yr and should be capable of operating for up to 5 yr. Another constraint of the study is that fabrication of the pump must be possible without requiring a separate research and development effort to produce materials capable of meeting requirements. Finally, the selection will, to some extent, be based upon a qualitative assessment of complexity, size, developmental status, and to a lesser extent, cost.

All of the pump options discussed in this TM are electromagnetic (EM) in nature, meaning that body forces are directly applied to the liquid metal by interacting currents and magnetic fields. Mechanical pumps have been omitted from the review as it is desirable to avoid wear issues, mechanically induced vibrations, and sealing difficulties associated with incorporating reciprocating or rotating machinery into a liquid-metal flow system.[3]

3. REVIEW OF ELECTROMAGNETIC PUMP TECHNOLOGIES

EM pumps exploit the fact that liquid metals are conducting fluids capable of carrying current.[4] By orienting a magnetic field perpendicular to a current passing through the liquid metal, a streamwise $\mathbf{j}\times\mathbf{B}$ Lorentz body force is exerted on the fluid. This has the effect of either accelerating the conducting liquid as it passes through the EM pump or increasing the pressure head within the liquid. One feature that is relatively universal in all EM pumps is that cavitation occurs at a flow velocity exceeding ~9.14 m/s, introducing instabilities and oscillations that can reduce pump performance.[4] EM pumps can operate at elevated temperatures, but temperature limits can be reached depending upon the materials employed to construct the pump and the working fluid being pumped.

Many methods using EM forces for pumping have been devised. These are primarily broken into two distinct classes—conduction and induction pumps. In a space nuclear reactor, the power required to operate an EM pump is generally derived from the power conversion equipment generating electricity from the reactor's thermal power output. However, there is a variation of the conduction pump, known as a thermoelectric (TE) pump, that generates it's own electrical power independent of the reactor's power conversion system. The operation, advantages, and drawbacks associated with different pump designs from each pump class have been reviewed and are discussed in the remainder of this section.

3.1 Conduction Pumps

In conduction pumps, current is directly conducted into the fluid through electrodes that are normally attached to the outer wall of the duct containing the liquid metal. There are two basic variants of this pump—direct current (DC) and alternating current (AC). In both variants the fluid is driven by the exact same physical processes, resulting in many common loss mechanisms. Both the DC and AC conduction pumps are reviewed presenting analytical solutions for the pressure developed by the pump and highlighting the loss mechanisms, inherent benefits, and disadvantages associated with each technology.

3.1.1 Direct Current Conduction Pumps

The DC conduction pump, shown in figure 2, is the simplest EM pump design, employing either permanent magnets or electromagnets to generate the field within the liquid metal.[4–8] They possess no moving parts and can easily be integrated into pump designs. Magnetic pole pieces are generally employed to minimize the leakage of magnetic flux outside the system.

An idealized schematic of a DC conduction pump is presented in figure 3. The liquid metal flows through a channel of width (w), length (l), and height (s). The magnetic field (B) and current (I) are perpendicular to the flow (and each other) and are uniform over the indicated faces.

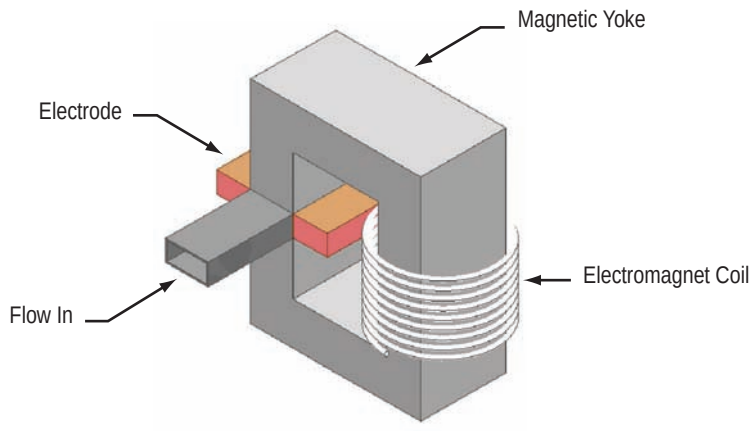

Figure 2. Schematic representation of a DC conduction pump.

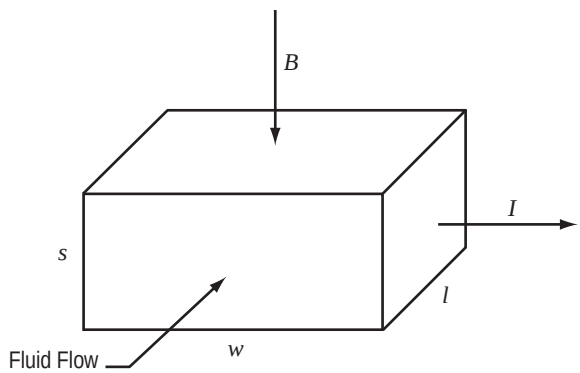

Figure 3. Idealized schematic of a DC EM pump.

The EM pump exerts a Lorentz body force on the fluid in the streamwise direction when current flows between the electrodes through the fluid. This establishes a pressure gradient in the fluid in the direction of the flow. Integration of the body force is written as

$$|F| = \int j\, B\, d^3x \ , \tag{1}$$

where j is the magnitude of the current density (equal to $I/(l\ s)$ if $|\mathbf{j}|$ is uniform). Performing the integration yields

$$F = \frac{I}{l\,s} B\, l\, s\, w = I\, B\, w \ . \tag{2}$$

The force causes a fluid pressure increase to develop which is equal to

$$P = \frac{F}{s\,w} = \frac{I\,B}{s} \tag{3}$$

It is observed that the pressure increase is only a function of the pump height, magnetic field strength, and total current. This relationship is plotted in figure 4 for varying values of desired pump pressure and input pump current. It is possible to obtain a level of *B*/*s* near 10 for very low-flow EM pumps (~10–100 mg/s), like those presently under construction for electric propulsion propellant feed systems.[9] This allows for the use of relatively low current levels (~10–30 A) in the production of pressure heads in excess of 10 kPa. However, achieving a high value of *B*/*s* is considerably more difficult when dealing with flow rates in the gallon per min range found in nuclear reactors because the required through-put necessitates a larger channel width and height. As a consequence, it is more difficult to achieve high values of *B*/*s*, leading to designs where current levels could greatly exceed 100 A in a high-flow rate, high-ΔP conduction pump.

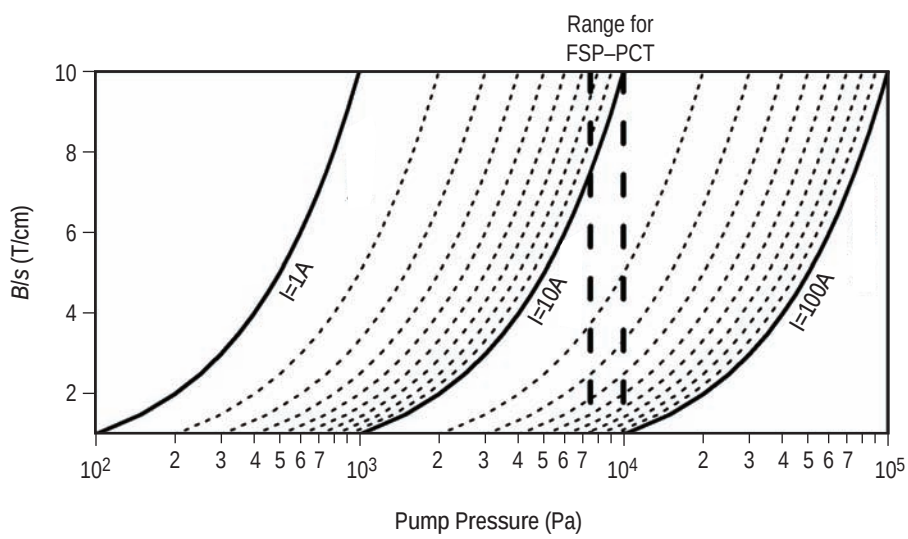

Figure 4. *B/s* ratio as a function of desired pump pressure for varying values of pump current.

While their design is simple, DC conduction pumps have several loss mechanisms that can seriously degrade performance, depending upon the operating regime of the pump. These loss mechanisms include magnetic braking, wall currents, end currents, armature effects, and Ohmic heating. Each of these issues is discussed along with potential solutions and the difficulties associated their implementation.

A back-EMF is generated in the liquid metal as it flows between the magnets, inducing a current in the direction opposite the applied current. The back-EMF scales as the product of the magnetic field and the volumetric flow rate, and the power loss scales as $B^2\,\dot{V}^2\,/\,\rho$, where ρ is the fluid resistivity.

The walls of the channel in most EM pumps are typically constructed of the same material as the rest of the flow system. In most nuclear systems, this is stainless steel. While the conductivity of stainless

steel is much lower than that of NaK, it is still relatively high when compared with electrically insulating materials. Consequently, the walls act as a resistor in parallel with the liquid metal, siphoning a finite level of current from the fluid. These losses can be limited by constructing the pump body from a highly resistive material, but this solution presents a different, distinct set of challenges. The material would have to withstand a high-temperature environment while in contact with NaK. The pump body must be inserted into the liquid-metal circuit, necessitating the employment of a method where the joints between the body and the stainless steel duct comprising the rest of the circuit are hermetically sealed. In addition, the electrode penetrations must be hermetically sealed since they must penetrate through the walls to make direct contact with the flow. The power dissipated in wall losses scale as V_w^2/R_w, where V_w is the voltage drop between the electrodes (equal to the difference between the voltage drop $I\,R$ in the fluid and the back-EMF, which goes like Bu where u is the fluid velocity).

At the ends of an EM pump, the magnetic field in the fluid decreases. Any end currents, or currents that bypass the applied field by passing through this region, constitute inefficiency in the pump, yielding a lower than desired body force on the fluid. The applied field can be expanded to fully encompass the current, but that can unnecessarily add weight to the pump. Another potential solution is to install insulating baffles within the flow to restrict the current path within the liquid metal. However, identifying an insulating material that can withstand high-temperature NaK and then installing the baffles inside the channel are challenging issues. This loss can be made negligible relative to the other loss mechanisms through proper field design.

Armature effects occur as the current passing through the conducting fluid induces its own magnetic field. This additional magnetic field increases the magnetic flux density present at the upstream end of the pump and decreases the flux density at the downstream end. The respective increase and decrease are both directly proportional to the pump current. The resulting nonuniform magnetic field introduces a nonuniform electromagnetic body force and, consequently, a nonuniform pressure distribution. This can significantly lower the efficiency of the pump. The armature effects can be countered by varying the gap between the permanent magnets, with the upstream ends of the magnets spaced further apart than the downstream ends. This helps to balance the strength of the combined magnetic field. The precise amount of variation necessary to compensate for armature effects is an area that requires further investigation.

Current levels in DC pumps can vary from 10 A to greater than 10,000 A, depending upon the desired flow rate and level of ΔP. Ohmic heating rates scale as I^2R, implying that the only way to reduce the level of resistive heat dissipation is to design the pump such that it operates at lower current levels.

Table 1. Loss mechanism scaling in conduction pumps.

Loss Mechanism	Effect of Loss	Loss Scaling
Back-EMF	Power loss	$\sim B^2\,\dot{V}^2/\rho$
Wall currents	Power loss	$\sim (I\,R - Bu)^2/R_w$
Armature effects	Nonuniform pressure distribution	$\sim I$
Ohmic heating	Power loss	$\sim I^2\,R$

The scaling results, presented in table 1, demonstrate that different loss mechanisms dominate depending upon the operating conditions of the pump. For example, if the flow rate is high, the back-EMF losses will be great. If the current is high, Ohmic heating and armature effects become increasingly large energy sinks. Finally, because it contains multiple terms, wall current losses can be mitigated by careful design.

The main benefit of a DC conduction pump is its relative simplicity, making the physics easy to understand. This makes it possible to write approximate equations governing both the pressure rise across the pump and the various loss mechanisms inherent in the design. Also, because it is a simple design there are not many parts that can fail, making it ideal for applications where access and repair may not be possible.

The main drawbacks to operating a DC pump are clearly illustrated in table 1, occurring when one desires either high current or high flow rate operation. In either regime, the power and performance losses become prohibitively large, making this design unattractive. The dissipation of heat arising from the conduction of high levels of current from the power conditioning unit to the pump can pose an additional challenge and require a significant amount of cabling, which can burden the overall design with a significant mass penalty. This problem can be partially solved by locating the power conditioning equipment as close to the pump as possible, keeping in mind that the closer it gets to the reactor, the more radiation tolerant it must be. Finally, when considering DC conduction pumps, the power conditioning needs of the system must be addressed. The pump requires electrical power delivered at low voltage (~1 V) and high current. Designing a power-processing unit capable of satisfying this requirement is not trivial and should not be written off when considering this type of pump.

3.1.2 Alternating Current Conduction Pumps

In an AC conduction pump, shown in figure 5, the current conducted into the fluid and the applied magnetic field are both time varying.[4,6,7] Since the current is time varying, transformers can be employed to alter the input current and voltage levels to those required for pump operation. In addition, a time varying applied magnetic field must be produced using electromagnets. This does make the AC pump more complex, larger and generally heavier than its DC counterpart, and active cooling may be required to dissipate Ohmic heating in the transformers and electro-magnet coils. On the other hand, the use of AC power makes it is easier to generate the high-current, low-voltage input that the conduction pump requires for higher flow rate operation.

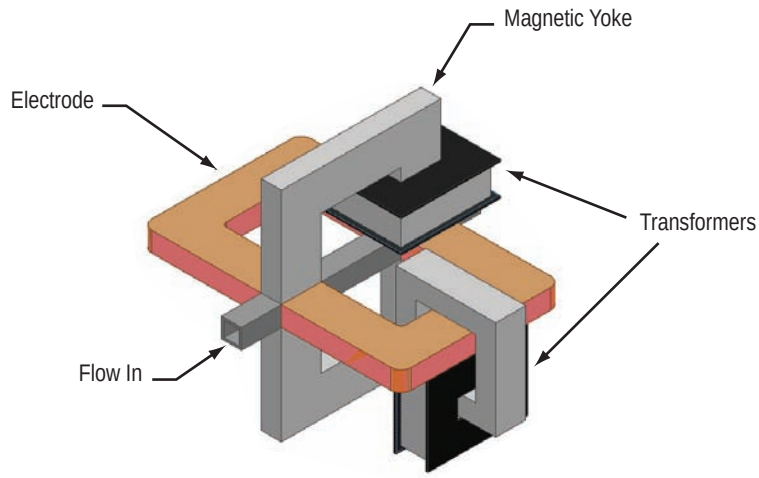

Figure 5. Schematic representation of an AC conduction pump.

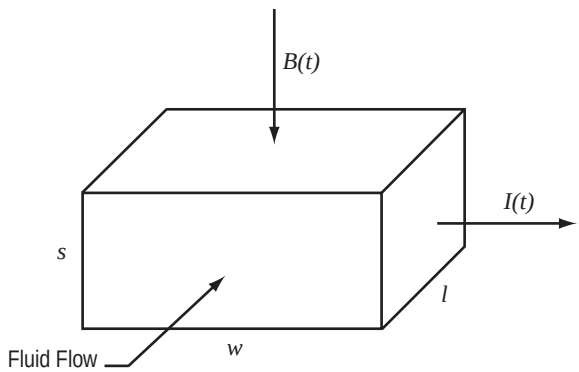

Figure 6. Idealized schematic of an AC EM pump.

As in the DC conduction pump, the Lorentz body force is still responsible for pumping the liquid metal through the system. Unlike the DC pump, however, the time varying nature of the applied field and current results in a temporally varying force.[4] If the magnetic field and current are written, respectively, as

$$B(t) = B_{\max} \sin(\omega t), \;\; I(t) = I_{\max} \sin(\omega t \pm \theta) \;\; , \tag{4}$$

where ω is the frequency and θ is the phase difference between the current and magnetic field, then the force applied to the liquid metal is

$$F(t) = B_{\max} I_{\max} \left[\frac{(1-\cos(2\omega t))\cos\theta \mp \sin(2\omega t)\sin\theta}{2} \right] w \;\; , \tag{5}$$

and the fluid pressure increase is equal to

$$P(t) = \frac{F(t)}{s\,w} = B_{\max} I_{\max} \left[\frac{\left(1-\cos\left(2\omega t\right)\right)\cos\theta \mp \sin\left(2\omega t\right)\sin\theta}{2} \right] \Big/ s \ . \tag{6}$$

All the loss mechanisms listed for DC conduction pumps are present in AC pumps, and while they now involve time varying values, the scaling of the RMS losses should match table 1 if the DC values of current, magnetic field, and flow velocity are replaced by RMS values.

In addition to the loss mechanisms present in DC conduction pumps, AC pumps additionally suffer from eddy current losses. These are closed current loops that are induced in the pump walls and liquid metal by the time varying magnetic fields and perform no useful work on the liquid metal. Eddy currents travel in planes perpendicular to the magnetic flux and scale with the magnetic field strength and the inverse of resistivity.

Another loss mechanism found in AC pumps concerns the phase difference between the magnetic field and the current. Even if the magnetic field and the current are generated using the same AC source, they are not necessarily in phase. In general, the impedance presented to the AC power source by the transformers generating the current and magnetic field will be different, leading to a phase shift of one relative to the other. It is observed from the previous equations that any phase shift decreases the force and corresponding pressure applied to the fluid, lowering the performance of the pump. Counteracting this requires an impedance matching network, which can add significant weight to the system when attempting to operate at high power levels.

While this pump is more complicated than the DC variant, it is still simple enough to allow for analytical expressions of the pump's performance. The AC nature of the pump allows for the use of transformers, making it easy to generate a high-current, low-voltage pump input from a high-voltage/low-current power processing unit input. Reducing the current required from the power conditioning system also reduces the resistive heating in the cabling between it and the pump.

While the time varying nature of the AC pump reduces the resistive power loss in the external cabling, the loss mechanisms cited in table 1 are still present. Consequently, this type of pump will also become overly inefficient at higher flow rates and current levels. In addition, the time varying nature of the input power introduces its own drawbacks. The time varying pump pressure leads to oscillations in the flow at a frequency of twice that of the current and magnetic field, giving rise to noise and vibration throughout the system. Eddy currents driven in the system and phase differences between the pump current and magnetic field lead to additional power losses.

3.2 Induction Pumps

Induction pumps differ from conduction pumps in that the current in the conducting fluid is induced by a traveling magnetic field.[4,6–8] The induction pump comes in many different varieties. Some of the more notable variants are the flat linear induction pump (FLIP), figure 7(a); annular linear induction

pump (ALIP), figure 8(a); and the spiral induction pump (SIP). A generic description of induction pumps is provided since all three variants possess essentially the same characteristics. Any differences will be highlighted where appropriate.

To drive the fluid in the channel, a time varying current is passed through sets of wires wrapped around iron cores. The time varying current produces a magnetic field which travels through the conducting fluid as a wave with a given phase velocity. The magnetic field induces currents in the fluid that interact with the traveling magnetic field to yield a net Lorentz force on the liquid metal. This process is illustrated in figure 7(b) for a FLIP and 8(b) for an ALIP.

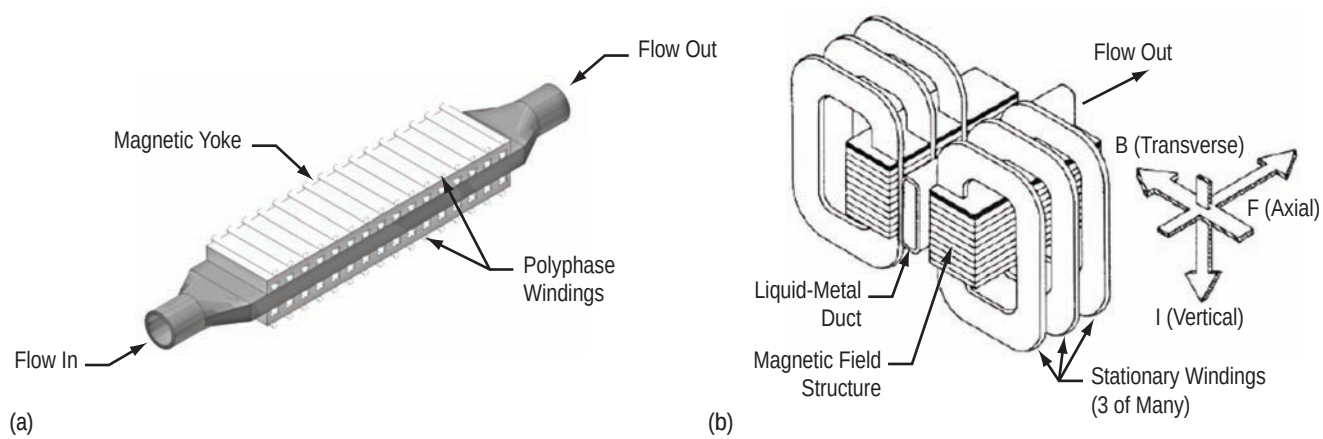

Figure 7. (a) Conceptual schematic and (b) internal view of a FLIP.

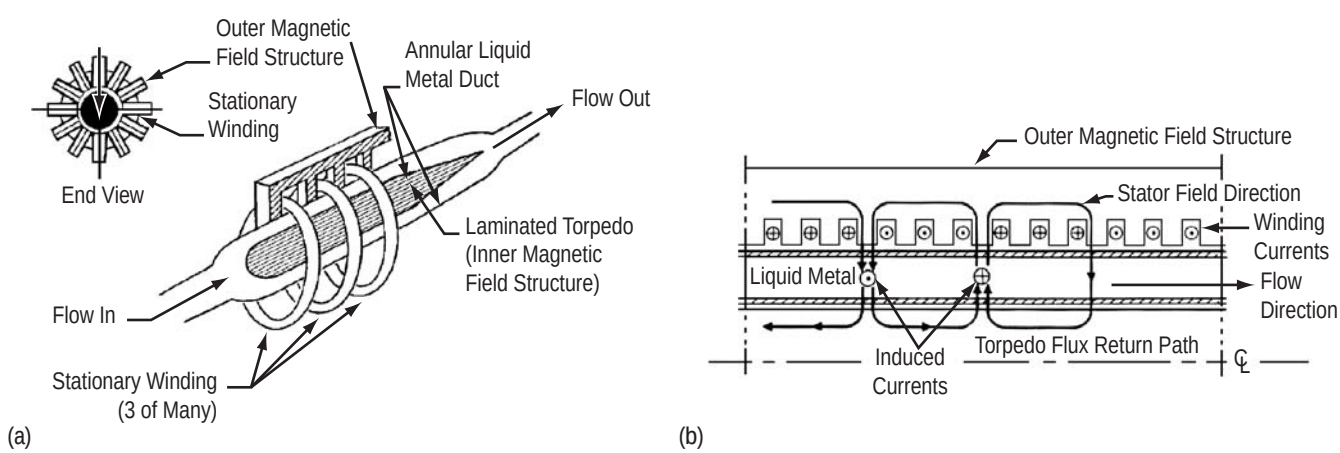

Figure 8. (a) Conceptual schematics and (b) internal view of an ALIP, from reference 4.

Unlike in the conduction pump cases, it is considerably more difficult to find a closed-form solution giving the pump pressure as a function of the various pump parameters. In general, both the traveling magnetic wave and the current induced by this wave must be solved for self-consistently using

Maxwell's equations. This problem is complicated by the fact that the liquid metal is highly conductive, introducing additional nonlinearities into the problem. Finally, these solutions must be coupled to the fluid mechanics problem to compute the actual pressure rise developed across the pump. This problem is typically solved numerically to avoid the difficulties associated with deriving a closed-form solution.

Induction pumps suffer from some of the same loss mechanisms present in conduction pumps. The polyphase coil windings experience increased resistive heating as the time varying input current is increased, and the induced currents in the liquid metal resistively heat the fluid as it passes. As in the AC conduction pump, eddy currents performing no real work can be induced in both the fluid and the walls of the duct. Finally, since the magnetic wave moves with a phase velocity that is faster than the flow speed, the force on the fluid will oscillate as a function of time potentially producing vibrations throughout the flow system. The efficiency (or loss mechanism scaling) is affected by the wavelength and frequency of the driving magnetic wave and the pump geometry (channel thicknesses and lengths). As with pump pressure, the optimization of pump efficiency is a complex problem without closed-form solution.

The rectangular geometry of the FLIP gives rise to an additional loss term. In the ALIP and SIP, the cylindrical/spiral geometry completely contains magnetic flux lines within the pump. However, in the FLIP geometry, the induced magnetic field can expand out through the fluid channel sidewalls, essentially producing a magnetic field in free space that performs no useful work on the liquid metal.

Induction pumps have an advantage at higher flow rates, where their system efficiencies begin to exceed those of conduction pumps. Induction pumps can also tolerate liquid metals at higher temperatures since the magnetic field is induced and the polyphase windings are not in direct contact with the fluid. The oscillating voltage and current required for the polyphase windings are relatively simple to generate using state-of-the-art power conditioning systems.

Heat transfer is a particularly important issue and potential drawback that must be addressed in any induction pump design. To induce the strongest magnetic field possible within the conducting fluid, the coils must be located as close as possible to the channel. However, this subjects them to more direct heat conduction from the liquid metal being pumped. For the pump to maintain integrity, this additional heat must, to some degree, be conducted away through the stators separating each set of windings. Unfortunately, under high heat loads the stators themselves may begin to degrade and delaminate. Design studies have shown that some level of delamination is tolerable, but that it definitely reduces the amount of heat that can be transferred from the coils. In addition to the stators, the transfer of heat in the torpedo core must also be considered when designing an ALIP pump. The torpedo must remain below the Curie temperature during pump operation to complete the magnetic circuit for the traveling waves. However, it is difficult to remove heat from the torpedo since it is surrounded by hot liquid metal on all sides. Materials do exist that allow for elevated temperature operation without a magnetic permeability loss, but there are limits beyond which the material fails to effectively conduct the magnetic field.

Induction pumps are not well suited for systems that operate at either low output power or low volumetric flow rate. While it is relatively easy to develop a power conditioning system capable of yielding the correct current, voltage, and frequency characteristics, several of these units would typically be required to produce the traveling magnetic wave. For high-power systems, the mass fraction associated with the power conditioning system should be small, but in low-power systems it can become prohibitively large.

3.3 Thermoelectric Pumps

TE pumps, like the one shown in figure 9, are similar to DC conduction pumps in many respects.[1,10] A magnetic field is typically applied using permanent magnets. Fluid is pumped by a Lorentz body force arising from the interaction of a current perpendicular to both the magnetic field and the flow vector.

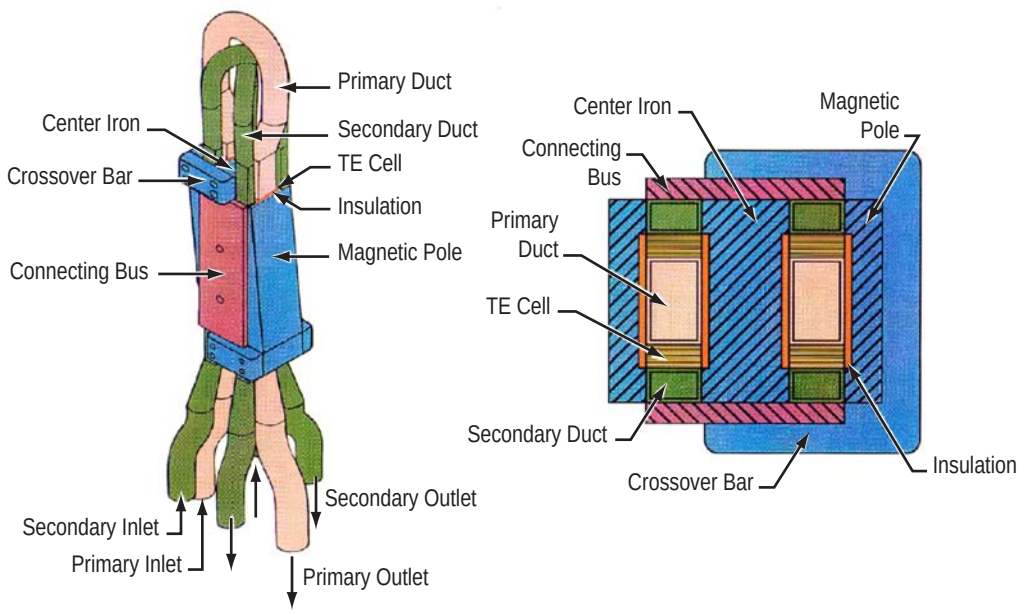

Figure 9. TE pump design from the SP–100 reactor, from reference 10.

Conduction pumps, and indeed any of the EM pumps previously reviewed in this TM, require external electrical power output to operate. This is usually obtained from the primary system responsible for the conversion of the reactor's thermal power into electrical power. A TE pump is fundamentally different in this aspect as the current flowing across the channel of the pump is derived directly from the thermal power contained in the hot liquid-metal flow. The method of extraction of this power is a TE mechanism called the Seebeck effect. Briefly stated, if two dissimilar materials (typically semiconductors) are connected and the junctions are held at two different temperatures resulting in a temperature difference ΔT, a voltage ΔV will develop between the junctions allowing current to flow, as shown in figure 10. The Seebeck coefficient is a measure of the TE effectiveness of different material combinations and is defined as

$$\alpha = -\frac{\Delta V}{\Delta T} \quad . \tag{7}$$

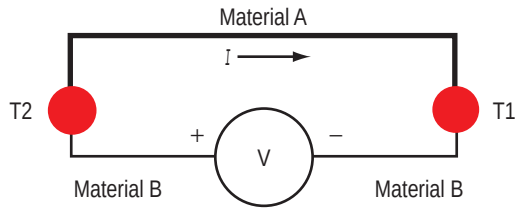

Figure 10. Schematic illustration of the Seebeck effect.

Since the geometry and pressure production mechanism in a TE pump are essentially the same as those found in the DC conduction pump, the pressure increase in a TE pump can be written using equation (3). Using the definition of the Seebeck coefficient and applying Ohm's law ($\Delta V = IR$), the pressure rise can be recast as

$$P = \frac{IB}{s} = \frac{\Delta V B}{Rs} = -\frac{\alpha \Delta T B l}{\rho w} \quad , \tag{8}$$

where l and w are defined in figure 3 and ρ is the resistivity of the liquid metal.

The loss mechanisms in the TE pump are the same as those cited in table 1. However, the current levels and flow rates are limited to much lower values when compared to a standard DC conduction pump because the TE mechanism generating current in the channel cannot simply be fixed at an arbitrary value independent of the liquid-metal temperature. As a consequence, the current levels and flow rates remain low and no single loss mechanism dominates the performance of the pump.

TE pumps have several advantages. They are relatively simple to understand and can be modeled using knowledge of DC conduction pumps. Since TE pumps derive their power directly from the heated liquid metal and require no external input, they can avoid many of the difficulties associated with startup. As the liquid metal becomes elevated in temperature, a TE pump will immediately begin to pump (self-starting pump). In addition, TE pumps are self-regulating devices. For example, if the liquid metal exiting a reactor increases in temperature, the pumping rate of a TE pump will also increase, pushing liquid metal through the reactor faster and reducing the outlet temperature of the coolant. The pump power conditioning units and interconnecting cables found in other EM pump schemes can be eliminated in the TE pump design where electrical current is produced within the pump itself.

With respect to space nuclear power system development and flight heritage, TE pumps have an advantage. Significant effort was expended in the late 1950s and early 1960s developing TE pumps, first using lead-telluride (PbTe) semiconductor materials and later switching to silicon-germanium (SiGe). During this time period TE pumps were integrated into several nonnuclear reactor simulators for evaluation. The culmination of this development effort was the spaceflight and successful operation of an SiGe pump in conjunction with the SNAP 10A nuclear reactor, which operated in-orbit for 43 days and was only shut down after a high-voltage failure in the spacecraft carrying the reactor.[1] The flight spare was thoroughly ground tested for over 10,000 hr and considerable additional work on TE pump driven reactors has more recently been performed for the SP–100 reactor program.[10,11]

Systems employing TE pumps are not without their difficulties, and care must be taken when integrating the pump into the flow loop. The primary limit on the pump is in the Seebeck coefficient, which limits the amount of current that can be drawn across the pump channel. The Seebeck coefficient must be high enough to obtain sufficient current to pump liquid metal through the system. In addition, TE conversion of heat to electricity is generally an inefficient process (1–5 percent). Additional current can be drawn by increasing the temperature in the liquid metal. However, at high temperatures delamination or degradation of the semiconductor junctions must be considered, since breaking the junctions will interrupt the current conduction path adversely affecting the rate at which the pump can push fluid through the flow loop. Consequently, TE pumps are not well suited for operation at high flow rates. A TE pump unit typically employs radiators to yield a proper temperature difference between the junctions. However, it is unclear if this will actually add an undue mass burden to the system since other pump variants also require radiators for cooling purposes. A full systems-level analysis would be required to show whether a TE pump had a specific power (W/kg) advantage over other pumps that required external input from power conversion and conditioning units.

The TE elements must remain conductively coupled to the rest of the current conduction circuit for the pump to operate. If the junctions between the different TE elements delaminate, current will not be conducted, and the pump will fail. Failure of this kind generally occurs when the junction temperature exceeds some level for an extended period of time. This is an issue not only between with the couplings of the various semiconductor legs comprising the TE element, but also between the element and the tube conducting the hot liquid metal. This failure mode is not well characterized and it is unknown exactly how pump performance will degrade as a function of operating time.

3.3.1 Skutterudite Thermoelectric Pumps

Recently, new TE materials and technologies have emerged as potential candidates for incorporation in TE pump designs. Skutterudites are a class of open-lattice structure materials that are interesting because they could replace the PbTe and SiGe semiconductors used in previous state-of-the-art TE pumps.[12] Thermal and TE properties of skutterudites are tailored by placing different types of atoms into the voids in the semiconductor lattice structure.

The primary features of the skutterudite pump are the same as those found in the standard TE pump. The only difference from the previous section is that skutterudites possess a higher Seebeck coefficient. As a consequence, a greater voltage and greater current can be imposed on the pump allowing for an increase in the pressure rise and flow rate within the pump, relative to one using non-skutterudite TE elements. The use of skutterudites can also permit the construction of a smaller pump possessing similar performance to a PbTe or SiGe pump.

Multiple skutterudite elements can be combined in series, yielding a multiple junction system known as a segmented TE generator.[13,14] This technique has resulted in TE power generation efficiencies in excess of 10 percent.[13,15]

As in the standard TE pump, delamination of a skutterudite driven pump is still the most likely failure mode. This is especially true of the TE generator skutterudite stacks where there are multiple junctions, and consequently multiple potential delamination points, in the system. Also, the long-term delamination characteristics for skutterudites are even less well characterized than the flight-heritage PbTe and SiGe materials.

4. COMPARISON OF PUMPING TECHNOLOGIES

Table 2 is a lengthy, though not exhaustive, listing of performance characteristics for several different liquid-metal pumps. The table provides either the predicted or the measured pump performance for a wide range of flow parameters in many different conduction, induction, and TE pumps. Pump efficiency η is defined as the ratio of pumping power to input electrical power (not including the efficiency of conversion from thermal to electrical power), and is given as

$$\eta = \frac{\Delta P \, \dot{V}}{P_{IN}} \quad , \tag{9}$$

where ΔP is the pressure rise across the pump and $\dot{V}$ is the volumetric flow rate.

Table 2. Performance of various EM pump designs.

Pump Type	Input Power (kWe)	ΔP (kPa)	Flow Rate (gal/min)	Pump Efficiency* (%)	Liquid (°C)	Comments	Reference
Conduction Pumps							
DC†	2.6	414	10	12	Bi (200)	4.4 kA /0.6 V	6
DC	14.2	276	300	44	NaK (250)	19 kA /0.75 V	5
DC†	261	517	2,000	30	Bi (550)	100 kA /2.6 V	6
DC	649	517	8,300	~50	Na (410)	200 kA /2.5 V	16
DC	1.9	187	50	36	Hg	6.8 kA /0.28 V	8
DC†	~20	138	420	19	Li (1,150)	~20 kA /~1 V	17
AC	1.25	103	6	4	Hg		6
AC	–	69	20	–	NaK (400)		18
AC	1.8–3.6**	90	20	3–6**	NaK	18 A /200 V**	19
Induction Pumps							
ALIP	8.6	97	420	36	NaK (175)		6
ALIP†	29	345	400	36	Na (500)		6
ALIP	721	517	8,300	45	Na (400)		6
ALIP†	30	138	420	15	Li (1,150)		17
FLIP	70	276	1,200	36	Na (370)		18
FLIP†	28	138	420	16	Li (1,150)		17
SIP†	3.6	414	25	22	Na (400)		6
SIP	35	276	312	18	Na (400)		18
SIP†	28	138	420	16	Li (1,150)		17
Thermoelectric Pumps							
TE	15.9 We	7.6	13.2	39.7	NaK (540)	SiGe cells—SNAP10A	1

* Does not include the efficiency of conversion from thermal to electrical power.
** Power factor assumed between 0.5 and 1 for calculation of the input power and pump efficiency.
† Predicted performance values.

The following points are clearly illustrated in table 2:

- The AC conduction pump is notably inefficient since the input electrical power is used to produce both the input current and applied magnetic field,
- Excluding the AC conduction pump, there is significant overlap in the operating envelopes of all the pumps.
- As a consequence, the final decision should be based on the systems-level impact the pump will have on the reactor unit (pump specific power and development cost).

Table 3 provides a comparison of general strengths and weaknesses inherent to each EM pump technology. In section 5 the items listed in tables 2 and 3 are used to justify pump recommendations, identify developmental issues, and offer risk mitigation.

Table 3. Primary advantages and disadvantages of different EM pumps.

Pump Type	Advantages	Drawbacks
DC conducting	Simple design Low pump mass	High-current cabling mass High-*I*, low-*V* power conditioning Armature and ohmic heating losses
AC conducting	Power conditioning using transformers	Low pump efficiency High transformer cooling requirements Pulsating body force Armature and eddy current losses Large pump, difficult to integrate
Induction	Power conditioning relatively lightweight at higher power Efficient over broad pump size and input power	Complex design Pulsating body force End and eddy current losses Multiple power conditioning units for production of traveling wave If stators delaminate, winding cooling is reduced
TE pump	Low system mass Simple design No external electrical input required Self-starting and self-regulating	Conductively coupled TE elements Failure if TE elements delaminate or lose conductive coupling Armature and ohmic heating losses

The self-starting nature of TE pumps was discussed in section 3.3. It is also important to understand how the other pump variants operate during the reactor startup sequence. Typically, conduction and induction pumps operate using a percentage of the electrical power produced from the reactor's thermal output. However, hot liquid metal must be flowing from the reactor core to the power conversion system to initially produce power, which means the pump must operate *before* any electrical power is produced. Consequently, batteries or some other type of energy storage system must be available to operate the pump during the startup phase of operation. This could be a source of some concern depending on the power requirements of both the pump and the power processing system responsible for converting the input electric power, since it must be capable of providing the pump with the proper current and voltage using input power from either the battery or the thermal-to-electric power conversion unit.

5. RECOMMENDATIONS, DEVELOPMENT ISSUES, AND RISK MITIGATION

Several different liquid-metal EM pumps have been reviewed for the purpose of selecting pump options for the FSP–PCT nonnuclear thermal simulation system. As a consequence of its low system mass, relative design simplicity, desirable performance characteristics, and flight heritage, the TE pump is recommended for incorporation into the design. It is further recommended that skutterudite TE elements be employed in this system to maximize its efficiency and demonstrate what appears to be a very promising advancement.

A DC conduction pump is recommended as a first fallback option partially because the design is simple. In addition, if an unforeseen or time-consuming issue arises during the implementation of a TE pump, that design can be converted with the least amount of effort into a DC pump accepting input from an external power supply. This would allow for validation of the design's pumping capability while leaving open the possibility for later integration of the TE pump should the technical issues be resolved in parallel with the FSP–PCT development effort.

An AC conduction pump could be used as a second fallback option. The stainless steel NaK circuit (SNaKC) system currently under development at NASA MSFC uses an AC conduction pump, making it readily available if the need should arise. Utilization of the AC conduction pump is recommended only as a last resort because it is quite large, requires convective air-cooling, and is difficult to integrate into a test system. The large size and low performance also make it a very poor option with respect to an actual flight simulation system.

Induction pumps were ruled out for this development effort. The flow rates and required pressures simply do not merit the additional complexity of several power conditioning subsystems capable producing the multiphase electric power necessary to generate traveling magnetic waves in the system. In addition, the stator/winding design process and the heat transfer issues associated with stator delamination further complicate this pump option, making its development and implementation time consuming and relatively expensive.

The primary design and implementation issues of a TE pump stem from the inclusion of TE elements in the system. Two interrelated and principle developmental problems are (1) conductive coupling of the TE elements to the rest of the current conduction circuit and (2) the lifetime of those TE elements at elevated temperature.

Risk mitigation can be provided at NASA MSFC facilities by performing small-scale testing to evaluate the TE elements and the bonding processes before inclusion in the FSP–PCT system. A small TE pump can be constructed and operated as part of a miniature closed-loop flow system located in a small vacuum vessel or glovebox. If it proves difficult to join the tubing to the TE elements using conventional bonding techniques, it might be possible to spring load the elements and employ Grafoil® or some other conductive intermediary to maintain the conductive path between the various elements in the system.

6. CONCLUSIONS

Several EM pump technologies have been reviewed, leading to the conclusion that a TE pump is the best option for inclusion on the FSP–PCT system at NASA MSFC. It offers a desirable combination of simplicity and low system mass and should be easily capable of operating within the required performance envelope. This pump has proven itself reliable in the past by accumulating 43 days of in-space operation in the SNAP 10A flight system and accruing 10,000 hr ground-testing on the SNAP 10A flight spare system. Recent TE element advances promise increased pump efficiency over the SNAP 10A system. The lifetime of the TE elements and the bonds that conductively couple the different elements in the circuit are the primary development issues that must be addressed. These issues are best addressed in small-scale tests performed before a full-size pump is fabricated.

REFERENCES

1. Schmidt, G.L.: "SNAP10A Test Program," Air Force Weapons Laboratory Report, SP–100–XT–0002, September 1988.

2. *Liquid-Metals Handbook: Sodium-NaK Supplement*, C.B Jackson, ed., Atomic Energy Commission and Department of the Navy, Washington, DC, 1955.

3. Mausteller, J.W.; Tepper, F.; and Rodgers, S.J.: *Alkali Metal Handling and Systems Operating Techniques*, Gordon and Breach, Science Publishers, New York, 1967.

4. Baker, R.S.; and Tessier, M.J.: *Handbook of Electromagnetic Pump Technology*, Elsevier Science Publishing, New York, 1987.

5. Barnes, A.H.: "Direct Current Electromagnetic Pumps," *Nucleonics*, Vol. 11, No. 1, p 16, January 1953.

6. Blake, L.R.: "Conduction and Induction Pumps for Liquid Metals," *Proceedings of the IEE,* 104A, Paper No. 2111 U, p 49, July 1956.

7. Childs, B.M.: "Electromagnetic Pumps and Flow Meters for Fast-Reactor Development," *GEC Journal of Science and Technology*, Vol. 40, No. 1, p 10, 1973.

8. Watt, D.A.: "The Design of Electromagnetic Pumps for Liquid Metals," *Proceedings of IEE*, No. 2763 U, December 1958.

9. Markusic, T.E.; Polzin, K.A.; and Dehoyos, A.: "Electromagnetic Pumps for Conductive-Propellant Feed Systems," *29th International Electric Propulsion Conference*, IEPC Paper 2005–295, October 2005.

10. Demuth, S.F.: "SP–100 Space Reactor Design," *Progress in Nuclear Energy*, Vol. 42, No. 3, p 323, 2003.

11. Zargham, F.M.; Atwell, J.C.; Salamah, S.A.; and Sinhg, V.N.: "Thermoelectric Electro-Magneto Pump Design for the SP–100 Reference Flight System," 24th Intersociety Energy Conversion Engineering Conference, Vol. 2, p 1227, 1989.

12. Nolas, G.S.; Morelli, D.T.; and Tritt, T.M.: "Skutterudites: A Phonon-Glass-Electron Crystal Approach to Advanced Thermoelectric Energy Conversion Applications," *Annual Review of Materials Science*, Vol. 29, p 89, 1999.

13. Caillat, T.; Fleurial, J.-P.; Snyder, G.J.; and Borshchevsky, A.: "Development of High Efficiency Segmented Thermoelectric Unicouples," *20th IEEE International Conference on Thermoelectrics,* p 282, 2001.

14. Snyder, G.J.: "Application of the Compatibility Factor to the Design of Segmented and Cascaded Thermoelectric Generators," *Applied Physics Letters*, Vol. 84, No. 13, p 2436, March 2004.

15. El-Genk, M.S.; Saber, H.H.; and Caillat, T.: "A Performance Comparison of SiGe and Skutterudite-Based Segmented Thermoelectric Devices," *AIP Conference Proceedings*, M. S. El-Genk, ed., Vol. 608, p 1007, 2002.

16. Barnes, A.H.: "Pumping of Liquid Metals," *International Conference on the Peaceful Uses of Atomic Energy*, Vol. 9, p 259, 1955.

17. Gahan, J.W.; Pileggi, P.T.; and Powell, A.H.: "Primary Loop Electromagnetic Pump Design," NASA Contractor Report CR–1571, General Electric Co., Cincinnati, OH, June 1970.

18. Cage, J.F.: "Electromagnetic Pumps for High-Temperature Liquid Metal," *Mechanical Engineering,* p 467, June 1953.

19. "Instruction Book for Style VI AC Conduction Electromagnetic Pump," Creative Engineers, Inc., Phoenix, MD, 2006.

REPORT DOCUMENTATION PAGE

Form Approved
OMB No. 0704-0188

Public reporting burden for this collection of information is estimated to average 1 hour per response, including the time for reviewing instructions, searching existing data sources, gathering and maintaining the data needed, and completing and reviewing the collection of information. Send comments regarding this burden estimate or any other aspect of this collection of information, including suggestions for reducing this burden, to Washington Headquarters Services, Directorate for Information Operation and Reports, 1215 Jefferson Davis Highway, Suite 1204, Arlington, VA 22202-4302, and to the Office of Management and Budget, Paperwork Reduction Project (0704-0188), Washington, DC 20503

1. AGENCY USE ONLY *(Leave Blank)*

2. REPORT DATE
March 2007

3. REPORT TYPE AND DATES COVERED
Technical Memorandum

4. TITLE AND SUBTITLE
Liquid-Metal Pump Technologies for Nuclear Surface Power

5. FUNDING NUMBERS

6. AUTHORS
K.A. Polzin

7. PERFORMING ORGANIZATION NAME(S) AND ADDRESS(ES)
George C. Marshall Space Flight Center
Marshall Space Flight Center, AL 35812

8. PERFORMING ORGANIZATION REPORT NUMBER
M–1182

9. SPONSORING/MONITORING AGENCY NAME(S) AND ADDRESS(ES)
National Aeronautics and Space Administration
Washington, DC 20546–0001

10. SPONSORING/MONITORING AGENCY REPORT NUMBER
NASA/TM—2007–214851

11. SUPPLEMENTARY NOTES
Prepared by the Nuclear Systems Branch, Engineering Directorate

12a. DISTRIBUTION/AVAILABILITY STATEMENT
Unclassified-Unlimited
Subject Category 20
Availability: NASA CASI 301–621–0390

12b. DISTRIBUTION CODE

13. ABSTRACT *(Maximum 200 words)*
Multiple liquid-metal pump options are reviewed for the purpose of determining the technologies that are best suited for inclusion in a nuclear reactor thermal simulator intended to test prototypical space nuclear system components. Conduction, induction, and thermoelectric electromagnetic pumps are evaluated based on their performance characteristics and the technical issues associated with incorporation into a reactor system. The thermoelectric pump is recommended for inclusion in the planned system at NASA MSFC based on its relative simplicity, low power supply mass penalty, flight heritage, and the promise of increased pump efficiency over earlier flight pump designs through the use of skutterudite thermoelectric elements.

14. SUBJECT TERMS
Liquid-metal pumps, electromagnetic pumps, magnetohydrodynamics, non-nuclear testing.

15. NUMBER OF PAGES
36

16. PRICE CODE

17. SECURITY CLASSIFICATION OF REPORT
Unclassified

18. SECURITY CLASSIFICATION OF THIS PAGE
Unclassified

19. SECURITY CLASSIFICATION OF ABSTRACT
Unclassified

20. LIMITATION OF ABSTRACT
Unlimited

National Aeronautics and
Space Administration
IS20
George C. Marshall Space Flight Center
Marshall Space Flight Center, Alabama
35812