NASA/CP—2006-214329/VOL2

Seals/Secondary Fluid Flows Workshop 1997

HSR Engine Special Session

May 2006

NASA STI Program . . . in Profile

Since its founding, NASA has been dedicated to the advancement of aeronautics and space science. The NASA Scientific and Technical Information (STI) program plays a key part in helping NASA maintain this important role.

The NASA STI Program operates under the auspices of the Agency Chief Information Officer. It collects, organizes, provides for archiving, and disseminates NASA's STI. The NASA STI program provides access to the NASA Aeronautics and Space Database and its public interface, the NASA Technical Reports Server, thus providing one of the largest collections of aeronautical and space science STI in the world. Results are published in both non-NASA channels and by NASA in the NASA STI Report Series, which includes the following report types:

- TECHNICAL PUBLICATION. Reports of completed research or a major significant phase of research that present the results of NASA programs and include extensive data or theoretical analysis. Includes compilations of significant scientific and technical data and information deemed to be of continuing reference value. NASA counterpart of peer-reviewed formal professional papers but has less stringent limitations on manuscript length and extent of graphic presentations.

- TECHNICAL MEMORANDUM. Scientific and technical findings that are preliminary or of specialized interest, e.g., quick release reports, working papers, and bibliographies that contain minimal annotation. Does not contain extensive analysis.

- CONTRACTOR REPORT. Scientific and technical findings by NASA-sponsored contractors and grantees.

- CONFERENCE PUBLICATION. Collected papers from scientific and technical conferences, symposia, seminars, or other meetings sponsored or cosponsored by NASA.

- SPECIAL PUBLICATION. Scientific, technical, or historical information from NASA programs, projects, and missions, often concerned with subjects having substantial public interest.

- TECHNICAL TRANSLATION. English-language translations of foreign scientific and technical material pertinent to NASA's mission.

Specialized services also include creating custom thesauri, building customized databases, organizing and publishing research results.

For more information about the NASA STI program, see the following:

- Access the NASA STI program home page at *http://www.sti.nasa.gov*

- E-mail your question via the Internet to *help@sti.nasa.gov*

- Fax your question to the NASA STI Help Desk at 301–621–0134

- Telephone the NASA STI Help Desk at 301–621–0390

- Write to:
  NASA STI Help Desk
  NASA Center for AeroSpace Information
  7121 Standard Drive
  Hanover, MD 21076–1320

NASA/CP—2006-214329/VOL2

Seals/Secondary Fluid Flows Workshop 1997

HSR Engine Special Session

Proceedings of a conference held at and sponsored by
Glenn Research Center
Cleveland, Ohio
October 15–16, 1997

National Aeronautics and
Space Administration

Glenn Research Center
Cleveland, Ohio 44135

May 2006

ERRATA

NASA/CP—2006-214329/VOL2

Seals/Secondary Fluids Workshop 1997
HSR Engine Special Session

The correct title is Seals/Secondary Fluid Flows Workshop 1997
HSR Engine Special Session

This printing reflects that correction.

This research was originally published internally as HSR064 November 1997

Note that at the time of writing, the NASA Lewis Research Center
was undergoing a name change to the
NASA John H. Glenn Research Center at Lewis Field.
Both names may appear in this report.

This report contains preliminary findings,
subject to revision as analysis proceeds.

Contents were reproduced from the best available copy
as provided by the authors.

Trade names and trademarks are used in this report for identification
only. Their usage does not constitute an official endorsement,
either expressed or implied, by the National Aeronautics and
Space Administration.

Level of Review: This material has been technically reviewed by technical management.

Available from

NASA Center for Aerospace Information
7121 Standard Drive
Hanover, MD 21076–1320

National Technical Information Service
5285 Port Royal Road
Springfield, VA 22161

Available electronically at http://gltrs.grc.nasa.gov

TABLE OF CONTENTS
Volume II

HSR OVERVIEW 1

BASELINE HSR INLET AND ENGINE BAY COWL SEAL REQUIREMENTS
David Sandquist, Boeing 17

HSCT ANTICIPATED SEAL NEEDS TURBOMACHINERY SEALS COMBUSTOR SEALS
John Henry, General Electric Co. 59

SEAL DEVELOPMENT FOR THE HSCT COMBUSTOR
David C. Jarmon, United Technologies Research Center 87

HSCT EXHAUST SYSTEM ANTICIPATED SEAL NEEDS
Larry Vacek, General Electric 111

SEALS AND SECONDARY FLOW NEEDS
HSR OVERVIEW

R.C. Hendricks and B. M. Steinetz

The leading Aeronautics program within NASA is the High Speed Research Program (HSR). The HSR program's highest priorities are high pay-off technologies for airframe and propulsion systems required for a high speed civil transport (HSCT). These priorities have been developed collaboratively with NASA, FAA and the US Industry (Boeing-McDonnell Douglas, Pratt & Whitney and General Electric).

Phase one of the HSR program started in 1990, and concentrated on the environmental challenges of minimizing NOx and noise. The first program goal is to reduce the NOx emission index to less than 5 (Concord NOx index is 20 and is unacceptable), in order to have little impact on the earth's ozone layer. The second goal is to reduce noise levels to FAR Stage 3 (or better), comparable to those of subsonic aircraft (far below the Concorde noise levels that require exemptions from less stringent standards). This requirement greatly impacts the nozzle design increasing its length and complexity and poses unique sealing challenges.

Phase two started in 1993 and initiated work on the technologies required for an economical HSCT. Materials technologies under development include a ceramic-matrix-composite combustion liner, lightweight materials for the nozzle, as well long-life turbomachinery disk and blade alloys. Other required materials are being developed under the DOD-IHPTET program, where there is close cooperation.

Economic goals translate into the development of technologies for tri-class service, 5000 nautical mile range aircraft with a ticket price no more than 20% over the subsonic ticket price. The potential market could be as large as 1500 aircraft, according to a Boeing study. Technology alone will not enable this airplane, yet without enabling technologies "on the shelf", it will not occur.

The HSCT engine will be the largest engine ever built and operate at maximum conditions for long periods of time posing a number of challenges. The HSR engine mission requires that rotating equipment stay at take-off condition temperatures for hours not minutes per flight. Hence rotating equipment and seals must operate for many thousands of hours at extreme temperatures. It is anticipated that the nozzle will be 12 feet long and roughly 4 ft. by 5 ft. in cross-section with a nominal airflow of 800 lbs/sec. The complex functions of the nozzle (including an ejector for noise attenuation) combined with long life place new demands on nozzle seal design. Three inlet configurations are under consideration with attendant sealing challenges, as will be illustrated herein. Four of these engines are required to propel a 5000 nautical mile class vehicle which demand that component reliability be at the highest possible level.

In response, an HSR seals session was implemented as a part of the 1997 –Seals and Secondary Flow Workshop. Overview presentations were given for each of the following areas: inlet, turbomachinery, combustor and nozzle. The HSCT seal issues center on durability and efficiency of rotating equipment seals (including brush seals), structural seals (including rope seals and other advanced concepts), and high-speed bearing and

sump seals. Tighter clearances, propulsion system size and thermal requirements represent extremes that challenge the component designers.

This document provides an initial step toward defining HSR seal needs. The overview for HSR seal designs includes, defining seal objectives, summarizing sealing and materials requirements, presenting relevant seal cross-sections, and identifying technology needs for the HSR office.

HSR High-Speed Research Objective

Help assure Industry's Preeminence in Aeronautics through Technology Development that will enable an Environmentally Compatible and Economically Viable High-Speed Civil Transport

HSR Phase I

Environmental

- **Stratospheric Ozone**
- **Airport Noise**
- **Sonic Boom**

HSR Phase II

Economics

- **Range & Payload Capablity**
- **Operating Cost**
- **Manufacturing Cost**

Potential for $200 Billion in Sales & 140,000 New Jobs

saw- - 9/
18/97

HSR IIA

Propulsion Development Path

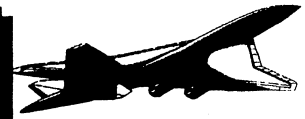

Technology Demonstration

High Speed Civil Transport

	HSR II NASA/Industry Partnership	HSR IIA NASA/Industry Partnership	Product Development Industry
Focus	Technology Development	Full Scale Technology Demonstration/Validation	Product Launch/Development
Environmental Barrier Issues	Sub-Scale Concept Demonstration	Full Scale Configuration Validation	Propulsion System Certification
Propulsion System Materials	Enabling Materials Selection and Development	Enabling Materials Application	Production Materials and Processes
Fabrication Processes	Laboratory/Test Cell Processes	Pre-Production Processes	Production Processes
Articles Fabricated	Selected Components 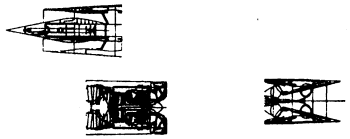	Full Scale Engine and Exhaust Nozzle	Propulsion System Assemblies
Extent of Testing	Subscale and Selected Full Scale Demonstration of Technologies	Full Scale Engine Demo Tests (SMP, Acoustic, AMT Method Validation)*	Propulsion System Endurance and Certification
Cost Basis	Industry/NASA Cost Trades	Industry/NASA Cost Trades	Production Costs, Business Plan

* Note: SMP=System Mechanical Performance
AMT=Accelerated Mission Test

CP/SAW - 10/15/97

HSR Key Propulsion Technologies

- High temperature, lightweight materials and coatings
- Integrated airframe/inlet/engine/nozzle controls

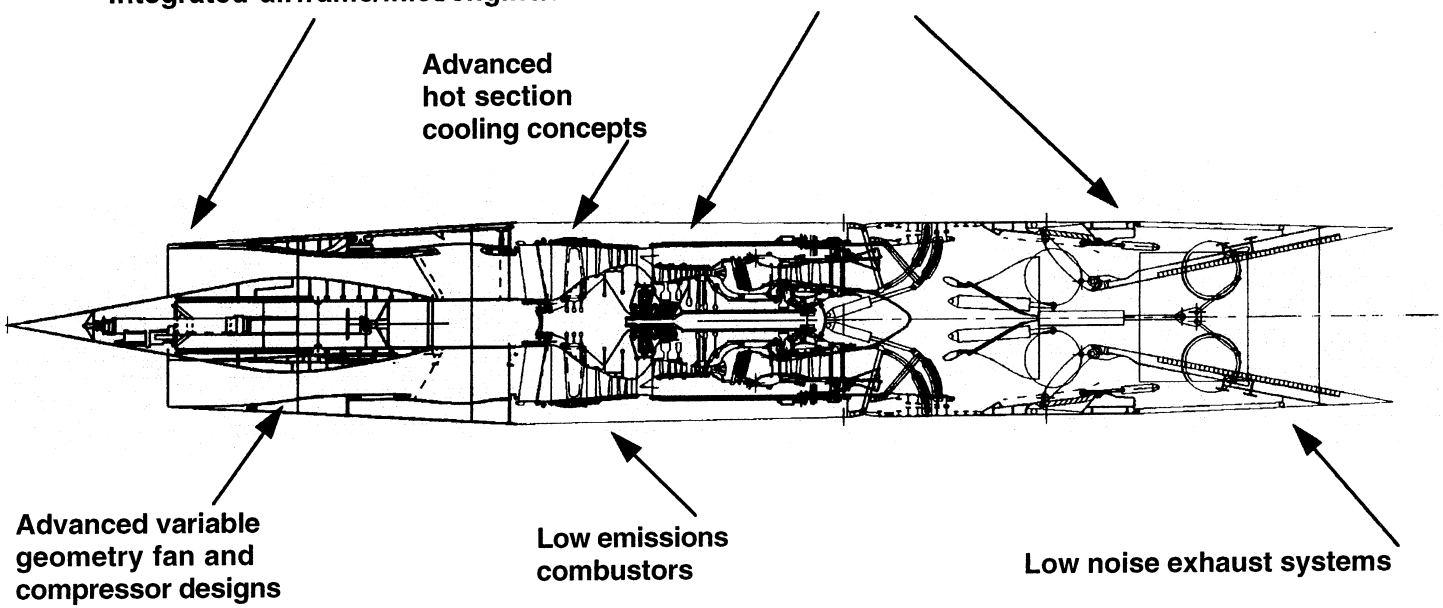

1/04/94

saw- - 9/
18/97

HSR

- Completed initial subscale flame tube and sector tests for a variety of Lean Pre-mixed, Pre-Vaperized (LPP) and Rich Burn, Quick Quench, Lean Burn (RQL) concepts and demonstrated ultra low NO_x potential of both approaches.
- Developed a CMC material which shows great promise for use as HSCT combustor liner which meets environmental and economic requirements.

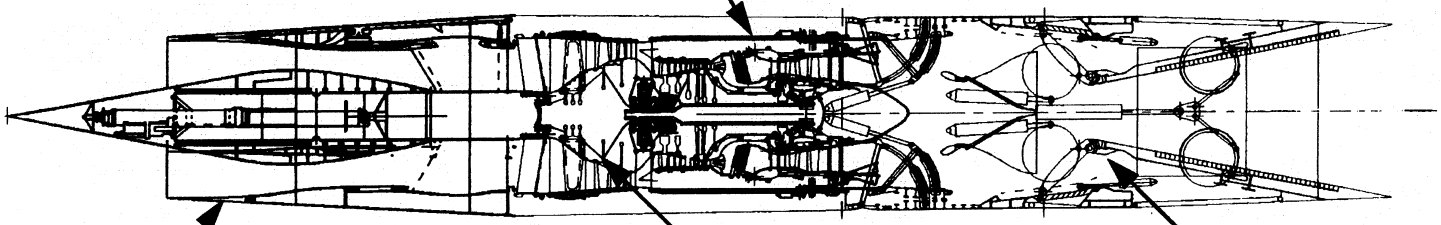

- Completed subscale tests of candiate axisymmetric and two dimensional concepts.
- Completed large scale inlet/engine oberability tests as part of US/Russia TU 144 program.

- Developed experimental alloys for turbomachinery disk and turbine airfoil applications which show promise of meeting HSCT design requirements.

- Completed initial small scale nozzle tests of configurations which meet aerodynamic and acoustic performance goals.Have identified approaches for further performance improvements.
- Completed evaluation of candidate materials systems for nozzle and demonstrated fabrication scale up capabilities.

HSR (Propulsion) Major Technology Advancements

saw- - 9/
18/97

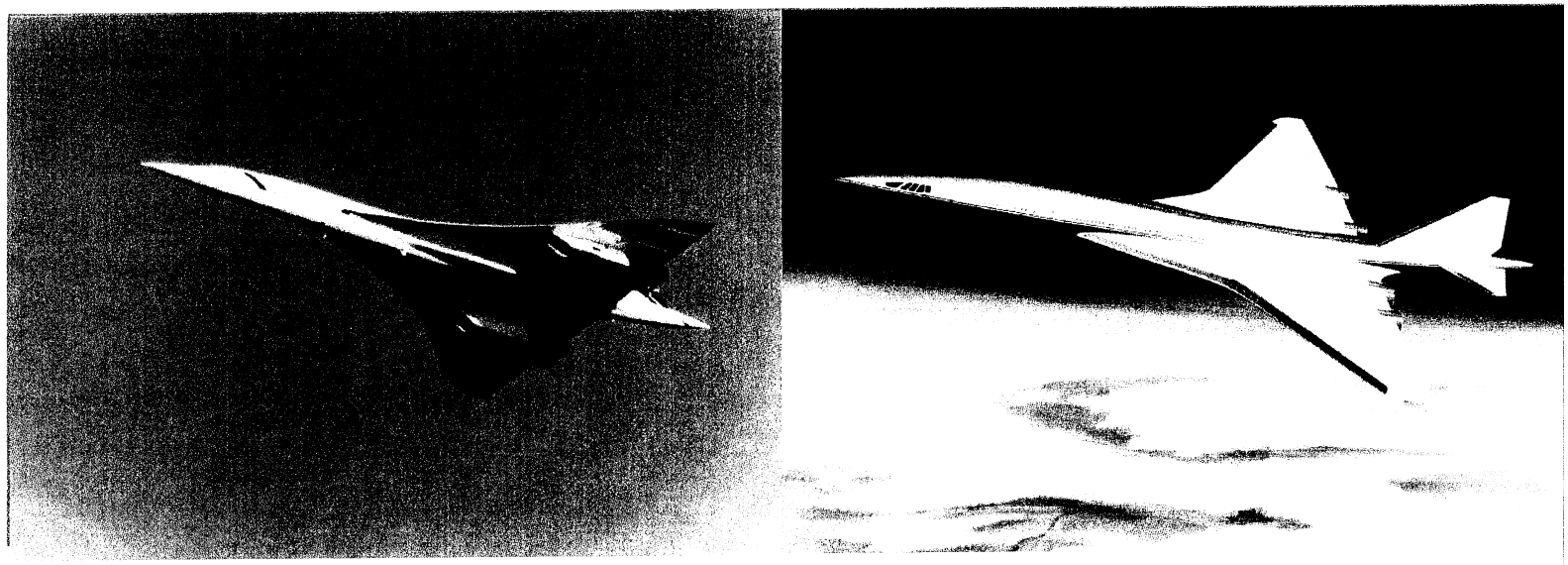

Concorde		HSCT
3000	Range (n.mi.)	5000-6500
128	Payload (passengers)	250-300
400,000	Weight (lb.)	750,000
Exempt	Community Noise Standard	FAR 36 Stage III - XdB
Premium	Fare Levels	Standard + $\leq$ 20% premium
20	Emissions Index	5

Figure 1 Comparison of Concorde to High Speed Civil Transport

saw- - 9/
18/97

HSR

HSCT Market Estimate

Range of Market Capture

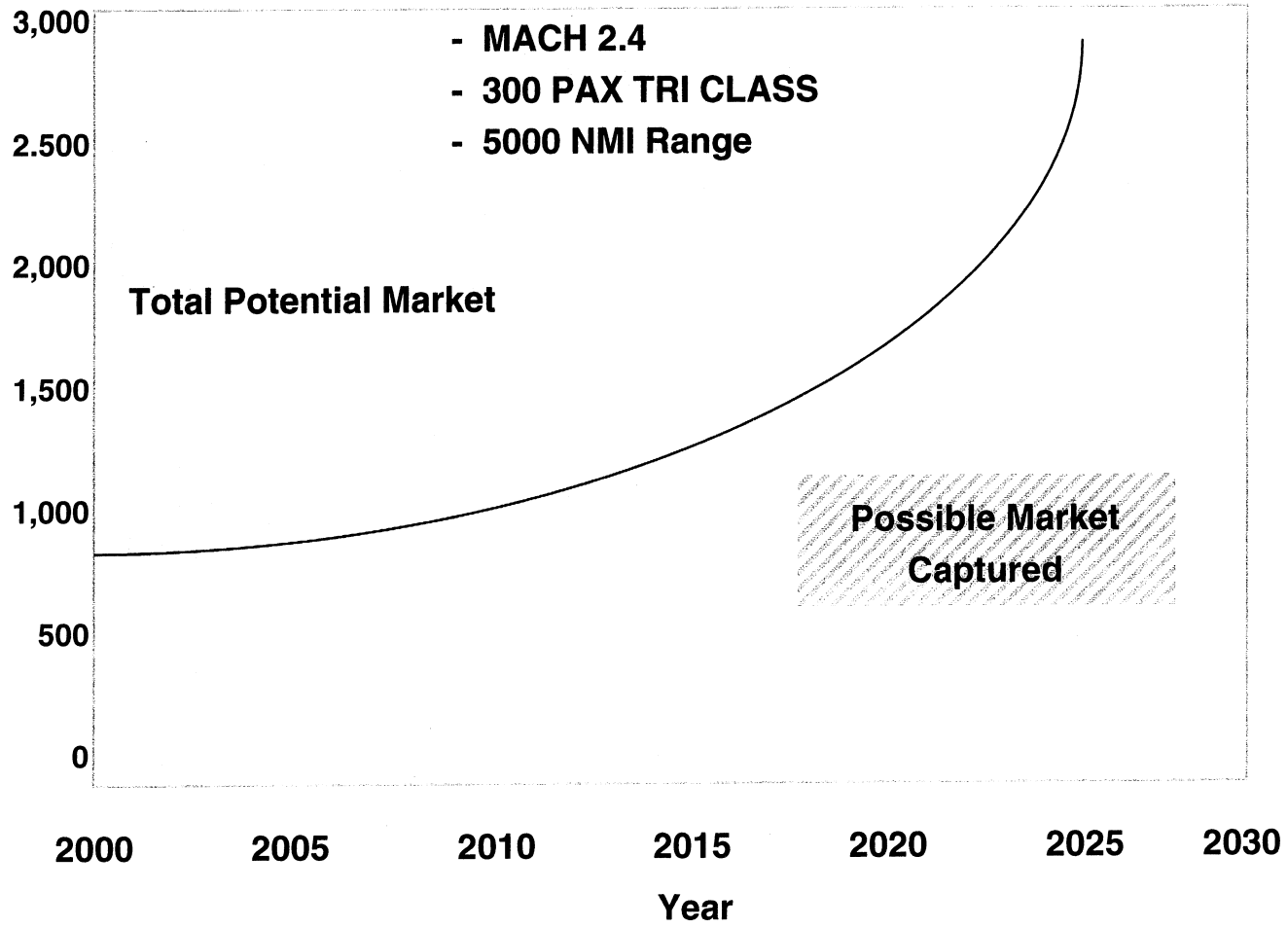

11/11/93

saw- - 9/ 18/97

HSR

Inlet Concepts

Translating Center Body (TCB)

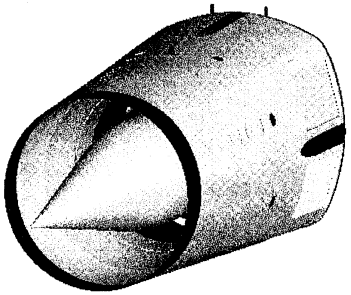

L/De = 2.3
Wt = 3310 lb

Variable Diameter Center Body (VDC)

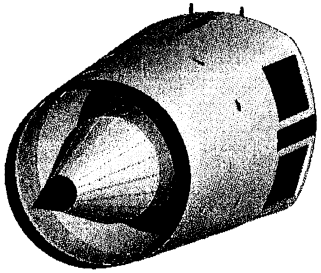

L/De = 2.1
Wt = 3840 lb

Two Dimensional Bifurcated (2DB)

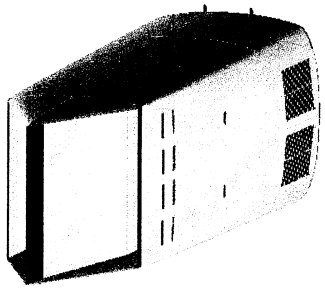

L/De = 2.9
Wt = 3880 lb

Completed Full Scale Designs Provide Inlet Weights, Geometry, and Performance for Aircraft Δ TOGW and Δ DOC Evaluations

HSR HSR MIXED COMPRESSION INLET CONCEPTS

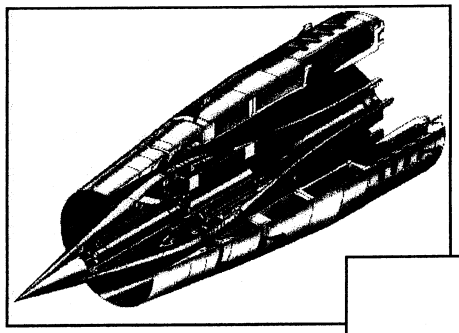

Axi- Translating Centerbody

- Simple
- Light Weight
- Limited Operability/Stability
- Limited Airflow Variability

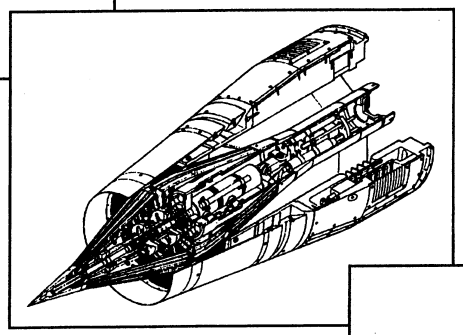

Axi- Variable Diameter Centerbody

- Wide Airflow Variability
- Complex Actuation
- Good Operability/Stability
- Moderate Weight

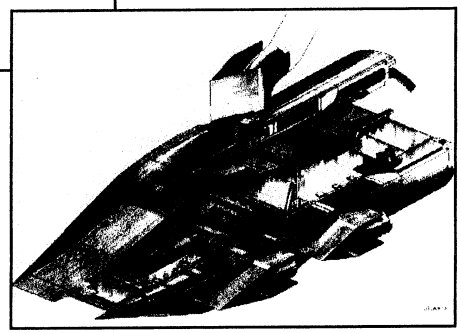

Two-Dimensional Bifurcated

- Widest Airflow Variability
- Simple
- Good Operability/Stability
- Heavy

1/24/95

saw- - 9/
18/97

HSCT Propulsion Systems Are Big Engines

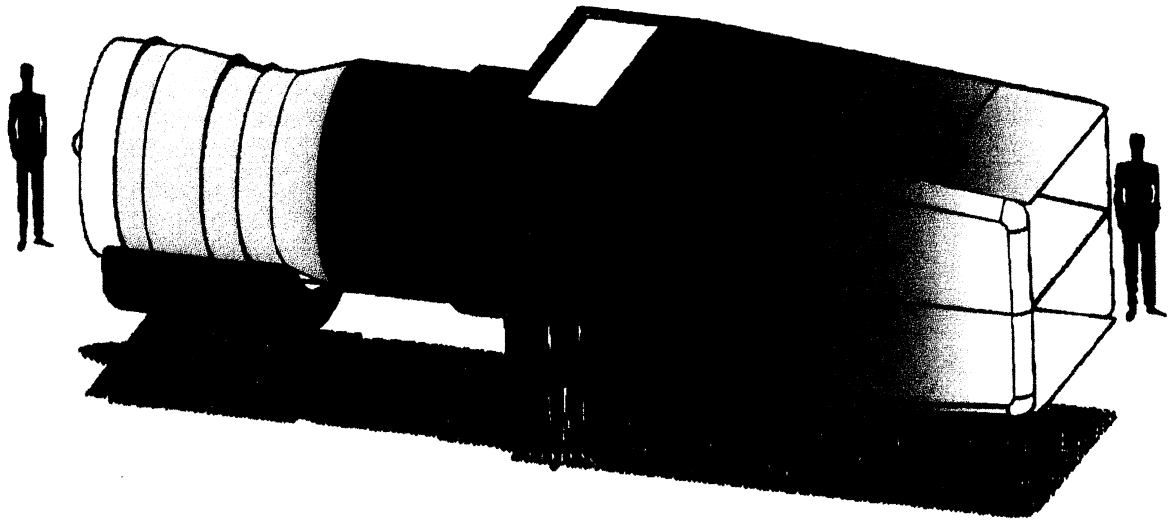

Artist's concept of the full scale HSCT propulsion system

saw- - 9/
18/97

HSCT Engine Design Challenges

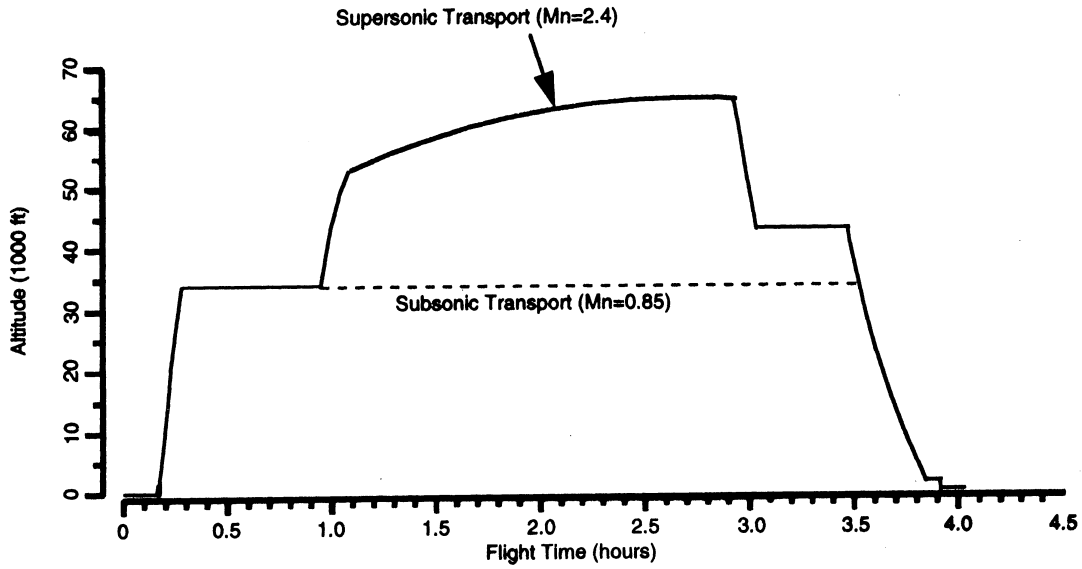

OPERATING CONDITION	SUBSONIC TRANSPORT	MILITARY FIGHTER	SUPERSONIC TRANSPORT
Total High Temperature/High Stress Operation (hours)	<300	<400	9,500
Sustained High Temperature/High Stress Operation (hours)	0.03	0.15	2.0

HSCT Seals Issues and Challenges

- Durability and efficiency of brush seals
  - Oxidation
  - High temperature materials (eg ceramics
  - Hard face coatings to protect parent rotor material while minimizing bristle wear
- Tight seal clearances
  - Rub tolerant, complaint seals
  - Rotating seals
- Propulsion system size
  - Large diameter rotors (full hoop seals)\
  - Large surfaces moving back and forth rapidly
    - Exhaust nozzle flap and siidewalls
    - Inlet centerbody
- High-speed seals for the bearing compartment

HSR Seals Session Goals and Objectives:

- Provide overview of HSR baseline seal designs
- Present cross-sections of candidate seals
- Summarize anticipated seal requirements/specifications (where defined)

seal size	sliding distance
air temps/pressures	sliding rates
temperatures (air/metal)	seal drag force (e.g. actuator load issues)
time at temperature	Other

- Identify Candidate materials: Seal and counterface (i.e. coating etc)
- Seek problem solution through possible synergy
- Address where seal development is required:
  Identify gaps in seal technology currently available vs. required
- Make recommendations to HSR Program Office

CD-97-76095

Nozzle Seal Design Considerations

Level of Seal Technology Readiness Level (TRL) can be determined by assessing following criteria and comparing to state-of-the-art

- **Temperature**
  - **Passively vs. actively cooled seals**
- **Seal Pressures**
- **Sliding Speed**
- **Nozzle Panel-to-Sidewall Relative Thermal/Structural Growths**
- **Adjacent Wall Condition:**
  - **Waviness/Sealability**
  - **Maintaining minimum waviness requires stiffer/heavier nozzle panels**
  - **Surface Roughness: Wear; long term durability.**
- **Actuation Forces:**
  - **Actuator Weight and Size (packaging)**
  - **Actuator response for nozzle transients**
- **Seal Materials:**
  - **Resist scrubbing damage**
  - **Resist Oxidation**
- **Integration of seals with nozzle:**
  - **Space Claim in movable nozzle panel**
  - **Nature of sidewalls: Acoustic tiles pose unique challenges:**
    - » **Gaps between acoustic tiles => Leaks**
    - » **Woven tiles: Durability of seals; Durability of Acoustic panels**
- **Survivability/ Durability:**
  - **High Acoustic Loads**
  - **Long "On-wing" performance**
  - **Cyclic durability at temperature**

Nozzle Seal Exit Criteria (Preliminary)

- **Seals demonstrated at: Required operating temperatures/pressures/acoustic levels**
- **Seals exhibit satisfactory durability/change in leakage over required cycle life**
- **Seals conform to and seal unique sidewall conditions**
  - **Acoustic Tiles and Gaps Between**
  - **Accommodate anticipated waviness**
- **Seal friction loads within acceptable limits for nozzle actuators**
- **Seal failure modes and effects documented and exhibit minimum/acceptable risk**
- **Cost and Availability to meet schedule**

BASELINE HSR INLET AND ENGINE BAY COWL SEAL REQUIREMENTS

David Sandquist
The Boeing Company
Seattle, Washington

The two dimensional bifurcated inlet, down selected for the HSR program, and the engine bay cowling consist of many sealing interfaces. The variable geometry characteristics of this inlet and the size of the propulsion system impose new sealing requirements for commercial transport aircraft. Major inlet systems requiring seal development and testing include the ramp system, the bypass/ take-off system, and the inlet/ engine interface. Engine bay cowling seal interfaces include the inlet/ cowling interface, the keel split line, the hinge beam/ engine bay cowling, and the nozzle/ cowling interface. These seals have to withstand supersonic flight operating temperatures and pressures with typical commercial aircraft reliability and lives. The operating conditions and expected seal lives will be identified for the various interfaces. Boeing's SST seal development program will also be discussed.

The High Speed Civil Transport's (HSCT) propulsion system requires significant technological advancements to become an economically viable product. Indifferent to the more severe operating conditions and variable geometry features, the HSCT propulsion system needs to operate with the same reliability as current subsonic systems. One area beginning to be addressed to meet these requirements is the inlet and engine bay cowl sealing systems.

Agenda

- Propulsion System Installation
- 2D Bifurcated Inlet
- Engine Bay Cowl
- Boeing's SST Seal Development Program (History)
- Conclusion

To illustrate the scale of the HSCT propulsion design an overview of the baseline propulsion system is shown installed on the HSCT airframe. Preliminary sealing interface requirements are presented for the two dimensional bifurcated inlet and the engine bay cowl. A historical perspective of the seal development program is given to show the starting point of the current seal development program. The proposed direction that this project is taking concludes this discussion.

Propulsion System Installation

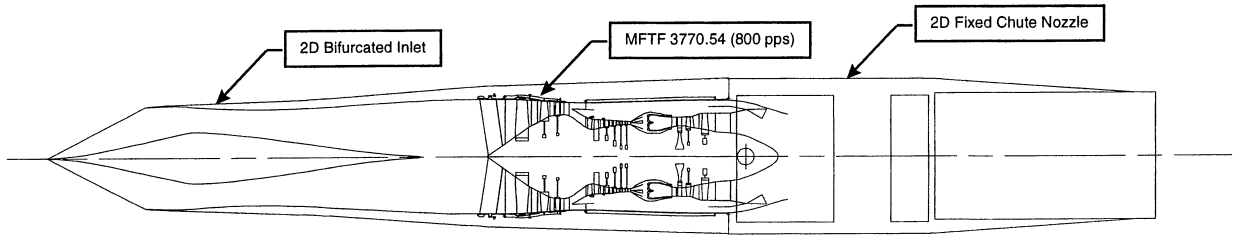

Plan View

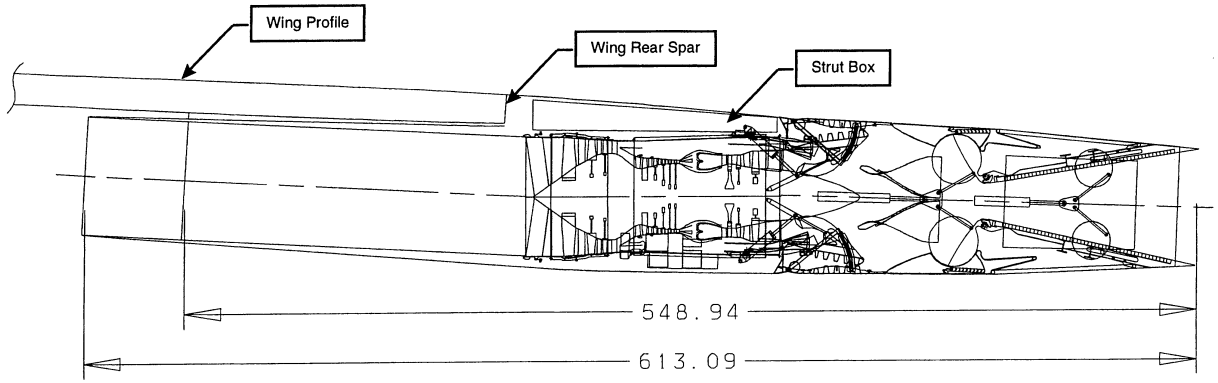

Side View

HSCT Outboard Nacelle Installation

The current baseline propulsion system installation includes a two dimensional bifurcated inlet mounted directly to the airframe. Down stream of the inlet are the 3770.54 mixed flow turbofan and fixed chute nozzle. The engine and nozzle are mounted to a strut which attaches to the rear spar of the wing. The overall propulsion system is over 613 inches (51 feet) long. The propulsion system is being designed to operate in an acoustically suppressed takeoff mode, a subsonic cruise mode, a supersonic mode, and a reverse mode.

2D Bifurcated Inlet

- Inlet Sealing Systems
  - Ramp System
  - Bypass/ Takeoff System
  - Inlet/ Engine Interface

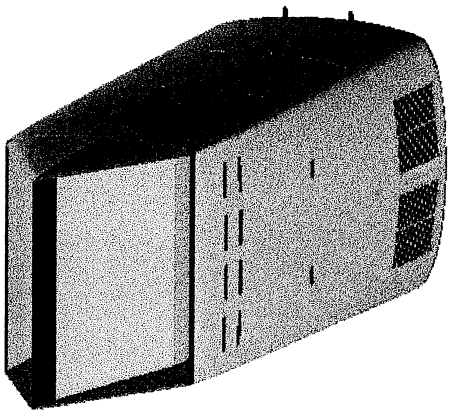

Two Dimensional Bifurcated (2DB) Inlet

The two dimensional bifurcated inlet utilizes a centrally located ramp to compress incoming flow. The cowl captures this flow and creates a duct further compressing this flow until it enters the engine. Inlet systems requiring seal development include the ramp system, the bypass/ takeoff system, and the inlet engine interface. To match throat area requirement throughout the subsonic and supersonic flight envelope the internal ramp must translate. During the takeoff and landing modes, when the forward velocity of the aircraft is low, takeoff doors open to allow addition air into the propulsion system. Located in the same area as the takeoff doors, bypass doors bleed excess air overboard to match engine requirement during higher velocities. The inlet and engine are mounted separately to the airframe and require a sealing system at their interface.

2D Bifurcated Inlet

Ramp System

Ramp to Sidewall

- Cross Section: TBD
- Size: TBD
- Air temperature: 370 deg. F
- Pressure : + 15.18/ - 3 psi delta
- Metal temp.: 350 deg. F
- Time at temp.: TBD
- Deflection: TBD
- Sliding distance: TBD
- Sliding Rates: TBD
- Actuator loading : (drag force) TBD
- Technology Gaps:

Operating temperature	Actuator Loading
Time at temperature	Seal/ Seal Interface

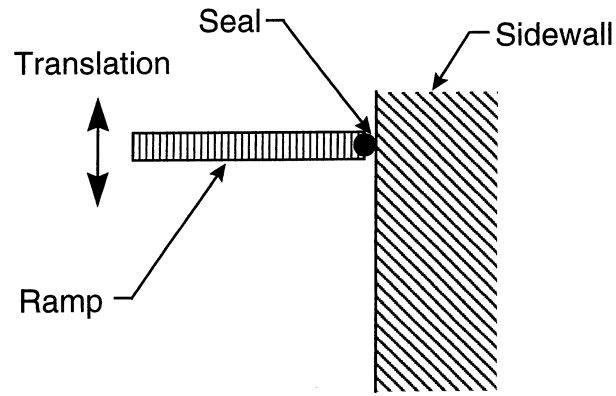

Inlet Station Cut

To accommodate the require variable geometry shapes, a single side of the ramp assembly is made up of three ramps connected by two hinges and supported by a trailing edge support beam. The ramps interface the the cowl along the horizontal crown and keel of the cowl. As this figure shows the interface between the sidewall and the translating ramp will need to be sealed. These seals will have to operate in an elevated temperature environment of supersonic flight with an overall operating life of 60,000 hours (similar to the life requirement of the inlet structure). The ends of these seals will have to be designed to interface with the ramp hinge seals.

2D Bifurcated Inlet

Ramp System

Ramp to Ramp Hinges

- Cross Section: TBD
- Size: TBD
- Air temperature: 370 deg. F
- Pressure : + 15.18/ - 3 psi delta
- Metal temp.: 350 deg. F
- Time at temp.: TBD
- Deflection: TBD
- Sliding distance: TBD
- Sliding Rates: TBD
- Actuator loading : (drag force) TBD
- Technology Gaps:

Operating temperature	Actuator Loading
Time at temperature	Seal/ Seal Interface

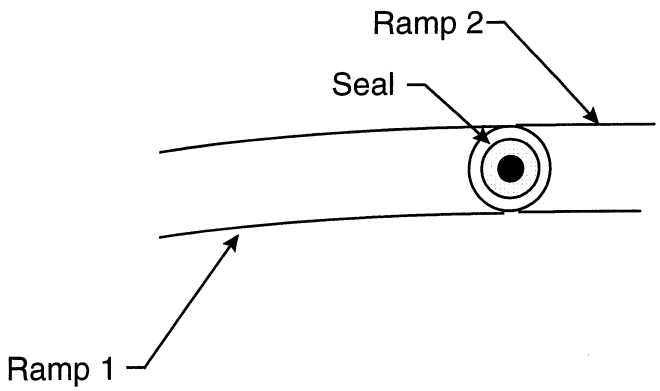

Inlet Bulk Line Cut

The interfaces between the ramps and the hinges will also require sealing. These seals will seal against a surface rotating about the hinge line. These ramp hinge seal ends will have to interface with the ramp sidewall seals.

2D Bifurcated Inlet

Ramp System

Ramp Trailing Edge to Support Beam

- Cross Section: TBD
- Size: TBD
- Air temperature: 370 deg. F
- Pressure : + 15.18/ - 3 psi delta
- Metal temp.: 350 deg. F
- Time at temp.: TBD
- Deflection: TBD
- Sliding distance: TBD
- Sliding Rates: TBD
- Actuator loading : (drag force) TBD
- Technology Gaps:

Operating temperature	Actuator loading
Time at temperature	Seal/ Seal Interface

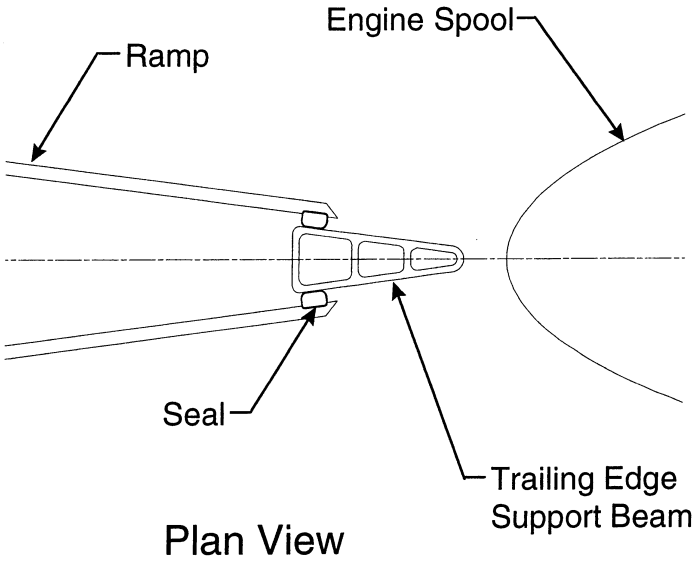

A trailing edge support beam will close out the ramps. The aft ramps will be guided with tracks and rollers to translate along the surface of this support beam. This interface will also require a sealing system. Again these seal ends will have to interface with the ramp sidewall seals.

2D Bifurcated Inlet

Bypass/ Takeoff System

Bypass Door - (current)

- Cross Section: TBD
- Size: TBD
- Air temperature: 370 deg. F
- Pressure: TBD
  TBD
- Metal temp.: TBD
- Time at temp.: TBD
- Deflection: TBD
- Sliding distance: TBD
- Sliding Rates: TBD
- Actuator loading : TBD
  (drag force)
- Technology Gaps:

Operating temperature	Relative deflection
Time at temperature	Seal Corners

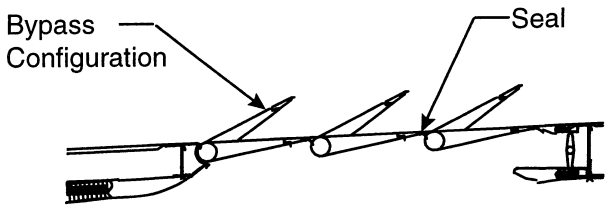

Plan View

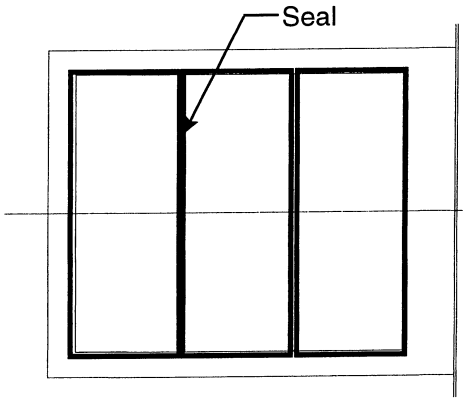

Side View

Each inlet consists of two bypass door assemblies located in the subsonic diffuser section of the inlet on both of the vertical sides of the cowl. The current bypass door assemble consists of three louver doors that rotate outward to allow excess flow overboard. The bypass doors are currently actively controlled to maintain the correct overflow of air. When closed these three door will need to be sealed around each door's circumference, requiring three rectangular seals per assembly. The current design shows a small land for compressing the seal.

2D Bifurcated Inlet

Bypass/ Takeoff System

Take-off Door - (current)

- Cross Section: TBD
- Size: TBD
- Air temperature: 370 deg F
- Pressure: TBD
  TBD
- Metal temp.: TBD
- Time at temp.: TBD
- Deflection: TBD
- Sliding distance: TBD
- Sliding Rates: TBD
- Actuator loading : TBD
  (drag force)
- Technology Gaps:

Operating temperature	Relative deflection
Time at temperature	Seal Corners

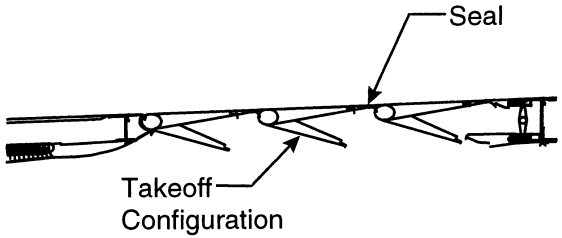

Plan View

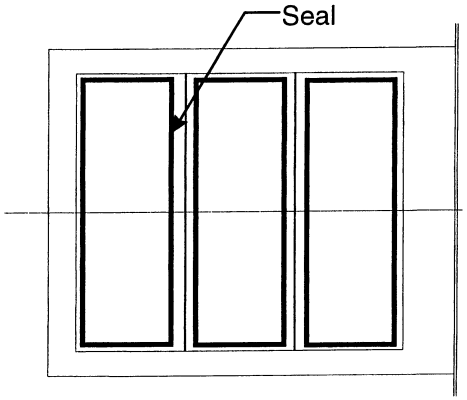

Side View

The takeoff door system also consists of three doors per assembly. These doors will be housed within the bypass doors, creating a door within a door. These doors are floating and will open only when the static pressure inside the diffuser is less than the external static pressure. When the diffuser pressure is higher than the external pressure, the doors are closed and sealed, again around the circumference. The door within a door design allows for a “hard stop” for the door and a land for sealing. The takeoff door seals will also be rectangular.

2D Bifurcated Inlet

Bypass/ Takeoff System

Bypass/ Take-off Door - (option)

- Cross Section: TBD
- Size: TBD
- Air temperature: 370 deg. F
- Pressure: TBD
  TBD
- Metal temp.: TBD
- Time at temp.: TBD
- Deflection: TBD
- Sliding distance: TBD
- Sliding Rates: TBD
- Actuator loading : TBD
  (drag force)
- Technology Gaps:
  - Operating temperature
  - Time at temperature
  - No Hard Sealing Surface
  - Relative deflection
  - Seal Corners

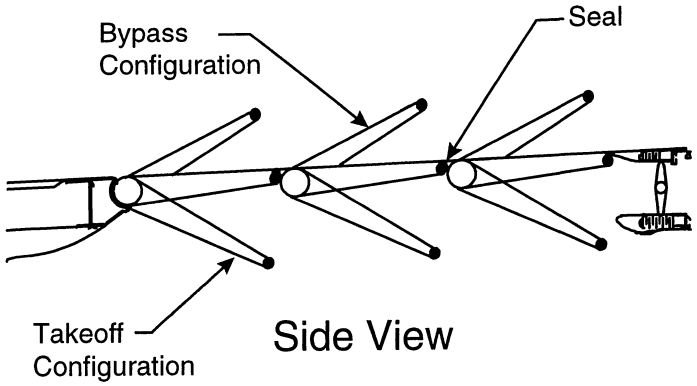

- No Hard Stop -

An alternate integrated bypass/ takeoff door design has been proposed. This design utilizes one actively controlled door for both the bypass and takeoff configurations. This design would not have a hard stop for locating the door. It would also not have a compressive seal land. While being a simpler design, this concept would still require the same leakage performance and controllability as the current design.

2D Bifurcated Inlet

Inlet/ Engine Interface

Subsonic Diffuser

- Cross Section: TBD
- Size: TBD
- Air temperature: 370 deg. F
- Pressure: TBD
  TBD
- Metal temp.: TBD
- Time at temp.: TBD
- Deflection: TBD
- Sliding distance: TBD
- Sliding Rates: TBD
- Actuator loading : N/A
  (drag force)
- Technology Gaps:
  Relative deflection - Inlet/ Engine

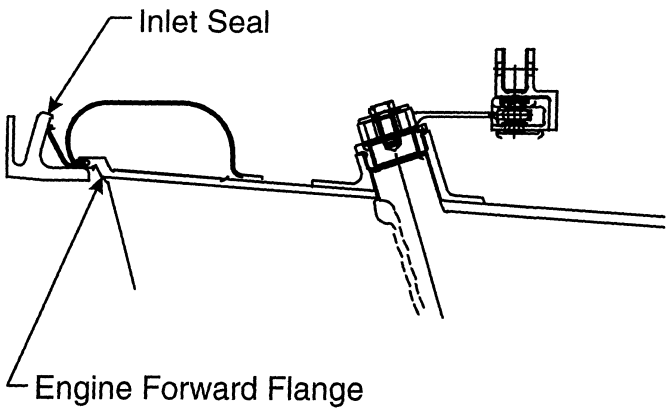

Typical Fighter Inlet Seal Interface

The final inlet seal system discussed here is located inlet/ engine interface. The interface shown is an example of a typical fighter inlet seal interface. The seal required for the HSCT application will maintain a seal with significant relative motion between the inlet and the engine which are mounted separately. Preliminary finite element models predict a relative axial motion of 0.8 inches and verical motion of 0.02 inches between the inboard inlet and engine. The outboard installation should see larger magnitudes.

Engine Bay Cowl

- Engine Bay Sealing Systems
  - Inlet Aft Cowl
  - Keel Split Line
  - Hinge Beam
  - Nozzle Cowling

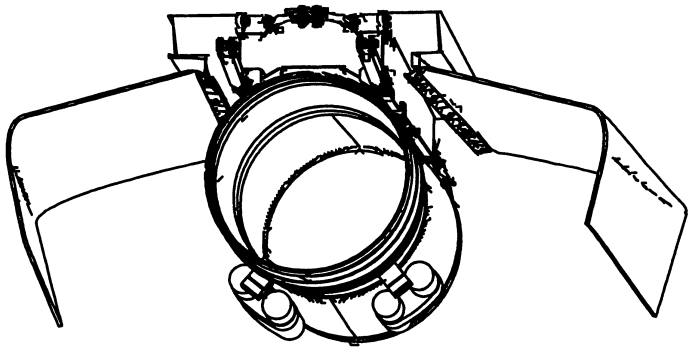

The engine bay cowling will be mounted off of the strut. It forms the aerodynamic fairing around the engine. The two cowls are attached to the strut by way of a hinge beam. Latches are located at the bottom of the cowlings to secure the cowling in a closed position. The engine bay cowling allows access to the engine for maintenance. The HSCT engine bay will contain free flowing air used to cool ECS bleed. This air is from the primary inlet flow taken

at the engine face. The engine bay cowling will require sealing at the inlet aft cowl interface, the keel split line, the hinge beam, and the nozzle cowl interface.

Engine Bay Cowl

Inlet Aft Cowl

- Cross Section: TBD
- Size: TBD
- Air temperature: 370 deg. F
- Pressure: TBD
- Metal temp.: TBD
- Time at temp.: TBD
- Deflection: TBD
- Sliding distance: Static
- Sliding Rates: Static
- Actuator loading : Static
  (drag force)
- Technology Gaps:

  Operating temperature Time at temperature

  Relative deflection - Inlet/ Engine Bay Cowl

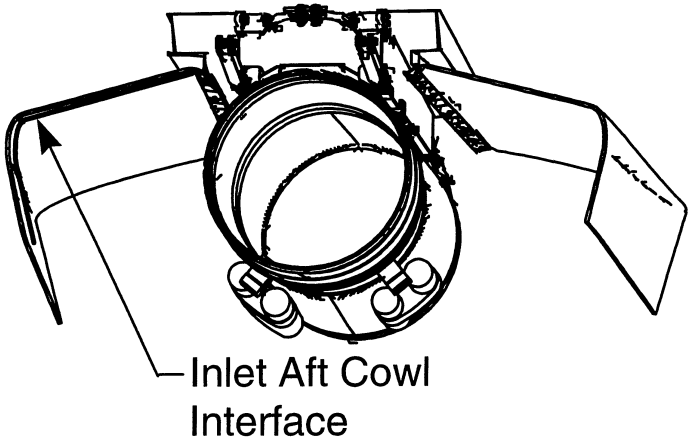

The first seal system shown for the engine bay cowl seals between the inlet aft cowl and the engine bay cowl. This seal will need to accommodate significant relative deflection between the inlet and the engine bay cowling. Sealing this interface is made more complicated by the tight aero contours required on the exterior of the cowling and the flexibility inherent in the its flat panels.

Engine Bay Cowl

Keel Split Line

- Cross Section: TBD
- Size: TBD
- Air temperature: 370 deg. F
- Pressure: TBD
  TBD
- Metal temp.: TBD
- Time at temp.: TBD
- Deflection: TBD
- Sliding distance: Static
- Sliding Rates: Static
- Actuator loading : Static
  (drag force)
- Technology Gaps:
  - Operating temperature
  - Time at Temperature

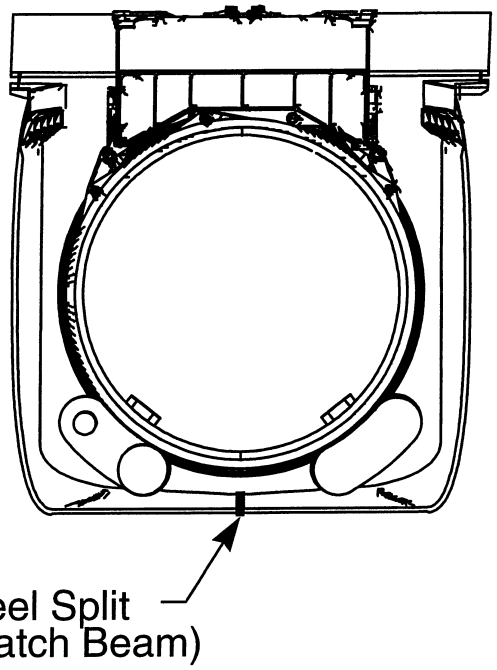

The keel split line will need to be sealed in the closed position. This seal should be similar to current subsonic latch beam seals except for the elevated temperature requirements.

Engine Bay Cowl

Hinge Beam

- Cross Section: TBD
- Size: TBD
- Air temperature: 370 deg. F
- Pressure: TBD
- Metal temp.: TBD
- Time at temp.: TBD
- Deflection: TBD
- Sliding distance: Static
- Sliding Rates: Static
- Actuator loading : Static
  (drag force)
- Technology Gaps:
  - Operating temperature
  - Time at Temperature

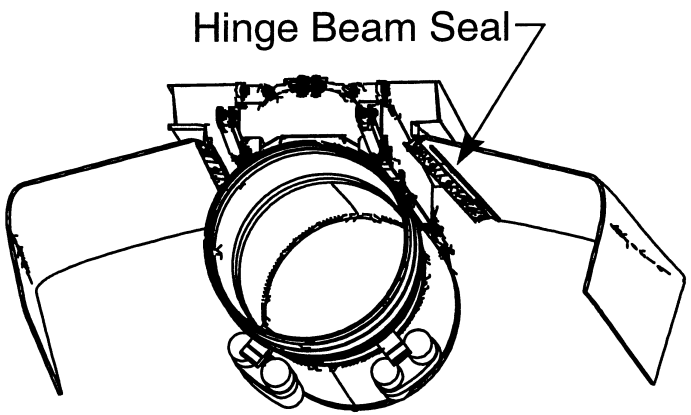

The hinge beam also requires sealing in the closed position. Again this seal should be similar to current subsonic hinge beam seals except for the elevated temperature requirements.

Engine Bay Cowling

Nozzle Cowling

- Cross Section: TBD
- Size: TBD
- Air temperature: 370 deg. F
- Pressure: TBD
- Metal temp.: TBD
- Time at temp.: TBD
- Deflection: TBD
- Sliding distance: Static
- Sliding Rates: Static
- Actuator loading : Static
  (drag force)
- Technology Gaps:
  - Operating temperature
  - Time at Temperature

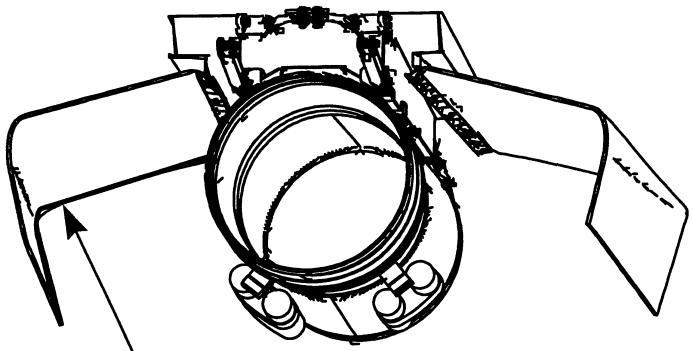

Finally the engine bay/ nozzle cowling interface will require a sealing system. This seal will need to accommodate fairly large displacements between the cowling and the nozzle while maintaining tight aero contours. This seal system will need to withstand significantly higher temperatures due to its proximity to the nozzle.

SST Seal Development

Mixed Compression Translating Centerbody

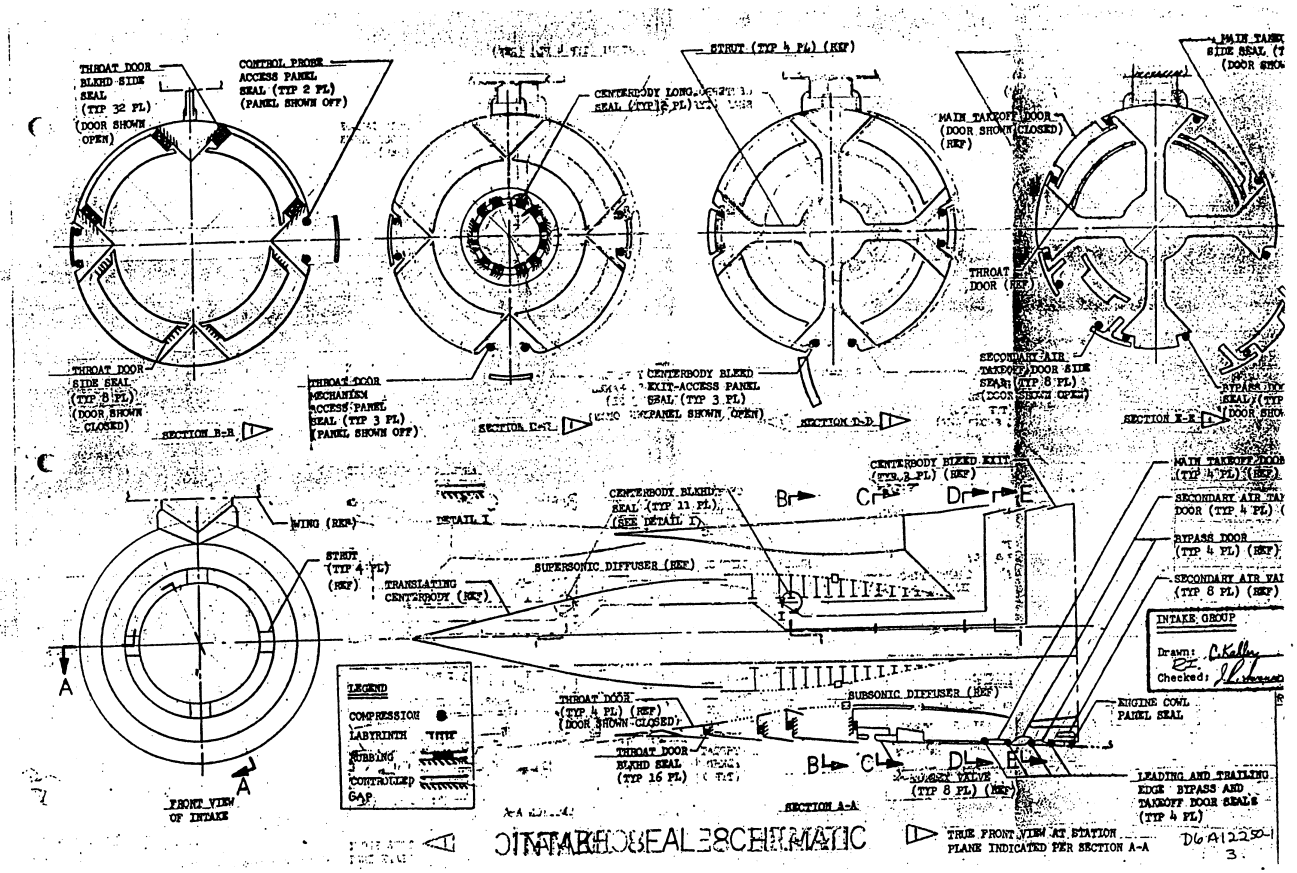

During Boeing's original SST development program, the propose inlet was a Mixed Compression Translating Centerbody inlet. This variable geometry inlet used a translating centerbody to control the throat. It also had various low pressure and high pressure bleed regions. This figure shows the location of various seals and the general type of proposed seals. While the sealing requirement for this design are significantly different than those of the 2DB inlet, this data gathered from the SST program is being used as a starting point for the current design.

SST Seal Development

Testing

- Test Conditions

Seal Intake Pressure:	35 - 5 psia
Seal Exit Pressure:	31.5 - 0.5 psia
Seal Inlet Air Temp:	Ambient, -75 deg. F, 500 deg. F
Seal Gap:	0.002, 0.01, 0.03, 0.06, 0.09 inches
Seal Compression:	0.00, 0.03, 0.06, 0.09, 0.12,0.18 inches

- Testing Duration

Inches of Travel:	5,000 inches @ 70 deg. F
(5 inch stroke)	5,000 inches @500 deg. F
	1100 inches @ -75 deg. F
Compression Cycles:	500 @ 70 deg. F
(close/ open/ close)	500 @ 500 deg. F
	110 @ -75 deg. F

In addition, the test condition used for the SST development program will be similar to the conditions required for the HSCT inlet seal test program. The SST development varied pressure, temperature, seal gap, and compression. The program also looked at how wear and cycles effected the seals performance.

SST Seal Development

Tested Seal Configurations - Geometry

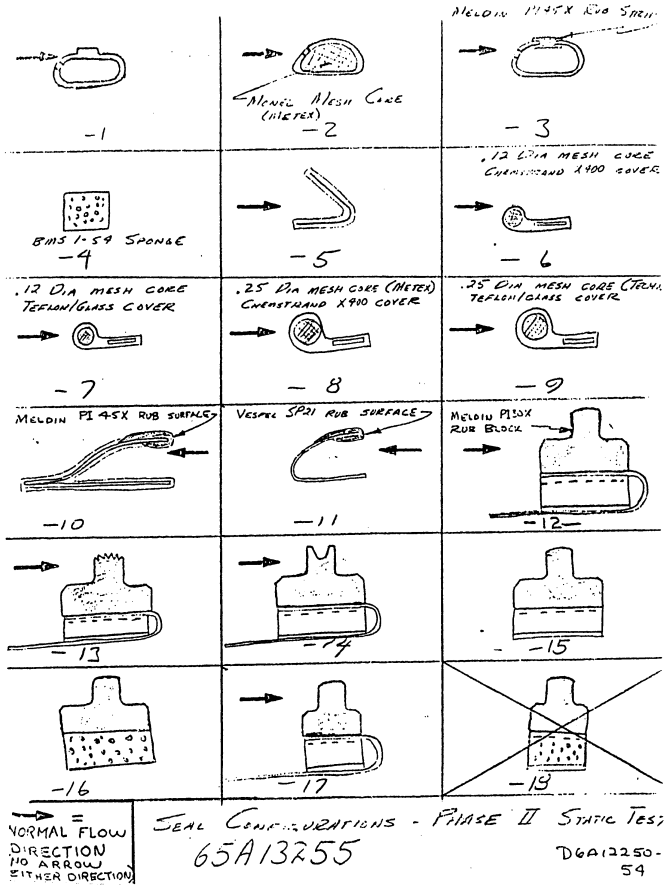

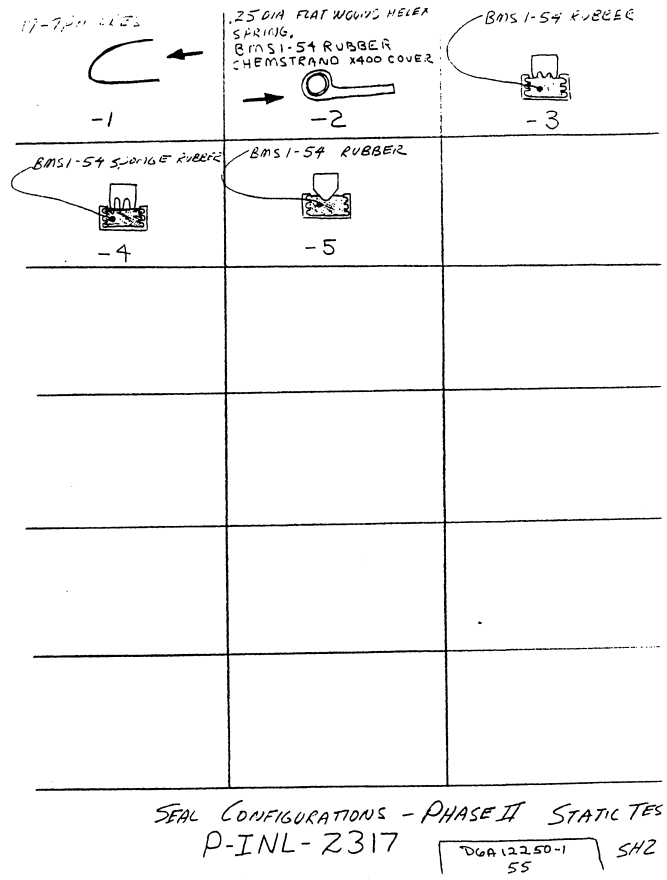

The cross section geometries looked at in this program are specific to the TCB inlet being design.

SST Development

Tested Seal Configurations - Materials

- 17-7 Cress (Sheet)

- Meldin P145X Rub Strip
- Meldin PI30X Rub Block
- Vespel SP21 Rub Strip

- Chemstrand X400 Cover
- Teflon/ Glass Cover

- Monel mesh Core (Metrex)

- BMS 1-54 Sponge
- BMS 1-54 Rubber

Materials used for the SST program are also dated. Both new materials and cross sectional shape will evaluated for the 2DB inlet seal development program. Experience from the VDC inlet development, the F15, F18, and B1B programs will be gathered.

Conclusion

- Where do we go from here? (HSR Task 1.3.11.5)

  Fill in the TBDs

  Incorporate VDC Inlet Seal Work, F15, & F18 Experience

  HSR Task 1.3.6 - Ramp Actuation Slew Rates & Forces

  Work with Inlet Control to iterate actuation force requirements.

  Work with Inlet & Engine Bay Cowl Mechanical Designs
  to define sealing interface deflections.

- Innovative seal design for Bypass/ Take-off Door System would significantly impact inlet design.

The presentation shows the preliminary status of the inlet and engine bay cowl seal development program. The initial goal of this project will be to fill in all of the “to be determines.” The next objective of this task will be to gather concepts and lessons from recently accessible military programs. Sealing systems are a significant part of the inlet and engine bay design. Innovative seal designs will be required for the engine bay/ inlet and nozzle interfaces.

HSCT ANTICIPATED SEAL NEEDS TURBOMACHINERY SEALS COMBUSTOR SEALS

John Henry
General Electric Co.
Cincinnati, Ohio

The High Speed Civil Transport (HSCT) engine concept is a large mixed flow turbofan similar in construction to current military fighter engines. The mission; however, is quite different. The engine will operate for long periods of time at very high Mach numbers and high altitudes. The engine is required to have very low emissions and noise levels to be acceptable in commercial service. The engine will be very large. Current thrust levels are in the 55000 lb range. At the current supercruise speed requirement of Mach 2.4, the Engine inlet temperature will be at least 380 degrees F . This is the lowest cycle temperature expected anywhere in the propulsion system. Seals will be expected to operate at this temperature and higher for thousands of hours without failure. Durability , cost, and weight will all be very important in determining the type of seals selected for a successful HSCT engine.

The next phase of the High Speed Research (HSR) program will be a technology demonstration of a full scale demonstrator engine scheduled to test in 2005. This is a joint effort between NASA, Pratt &Whitney, and General Electric. The ground test will be full size and incorporate as much of the HSCT needed technology as possible at that time. The test will demonstrate noise, emissions, durability , as well as the manufacturing capability to make an HSCT of advanced materials.

Weight will be very expensive in an HSCT due to the cost of fuel to go Mach 2.4. The weight of the seals will be assessed at a cost about an order of magnitude higher than current subsonic aircraft engines. Temperatures in the aft sumps pressurized with fan discharge air will be at current sealing material temperature limits. Pressures and speeds will be about conventional for current subsonic engines. Engine fluids to be sealed will be commercial current fleet standards, but the proposed high pressure hydraulic fluid(PFPAE) is new to the fleet.

Based on weight considerations, the engines and nozzle accessories will not be contained in an environmental pod as in the past on the GE4 and J93 supersonic engines. This means that the accessories (and electronics) will be required to survive in a temperature environment of 380 to 500 degrees F for very long times. This will be a severe test for the actuator and component fluid seals. The low noise exhaust nozzle will require several high pressure hydraulic actuators for the complex noise suppression and thrust reverse systems for the commercial HSCT.

The HSCT will fly at an altitude that requires that NOx be about 85% less than current combustors. One of the requirements for a low NOx combustor is that cooling air to the combustion liners be reduced to a minimum. This may require the development of a seal similar to the spline seals currently used in turbines for the combustion liner segments to limit parasitic leakage. Another option under study is a ceramic combustion liner. In this case, a seal needs to be developed that is compatible with a metallic dome and with a ceramic liner at very high temperatures and last a long time for the HSCT mission.

HSCT
HIGH SPEED CIVIL TRANSPORT

HSCT PROPULSION SYSTEM

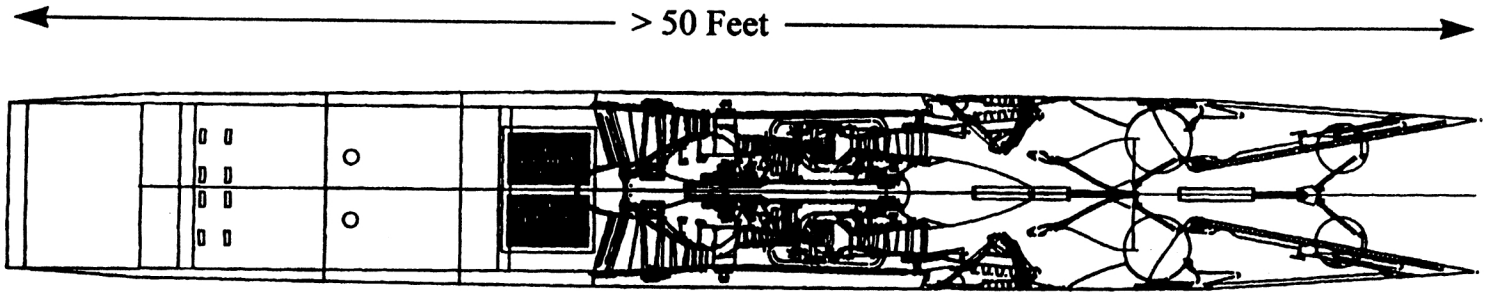

2D INLET **MIXED FLOW TURBOFAN** **MIXER/EJECTOR NOZZLE**

SLIDE 1

Overall view of propulsion system. The turbomachinery is about 1/3 of the package. At supersonic cruise the inlet provides about 2/3 of the propulsive thrust and supplies air to the fan face at 380 degrees Fand 18 psia. This is the "lowest" air temperature available to the engine at supercruise.

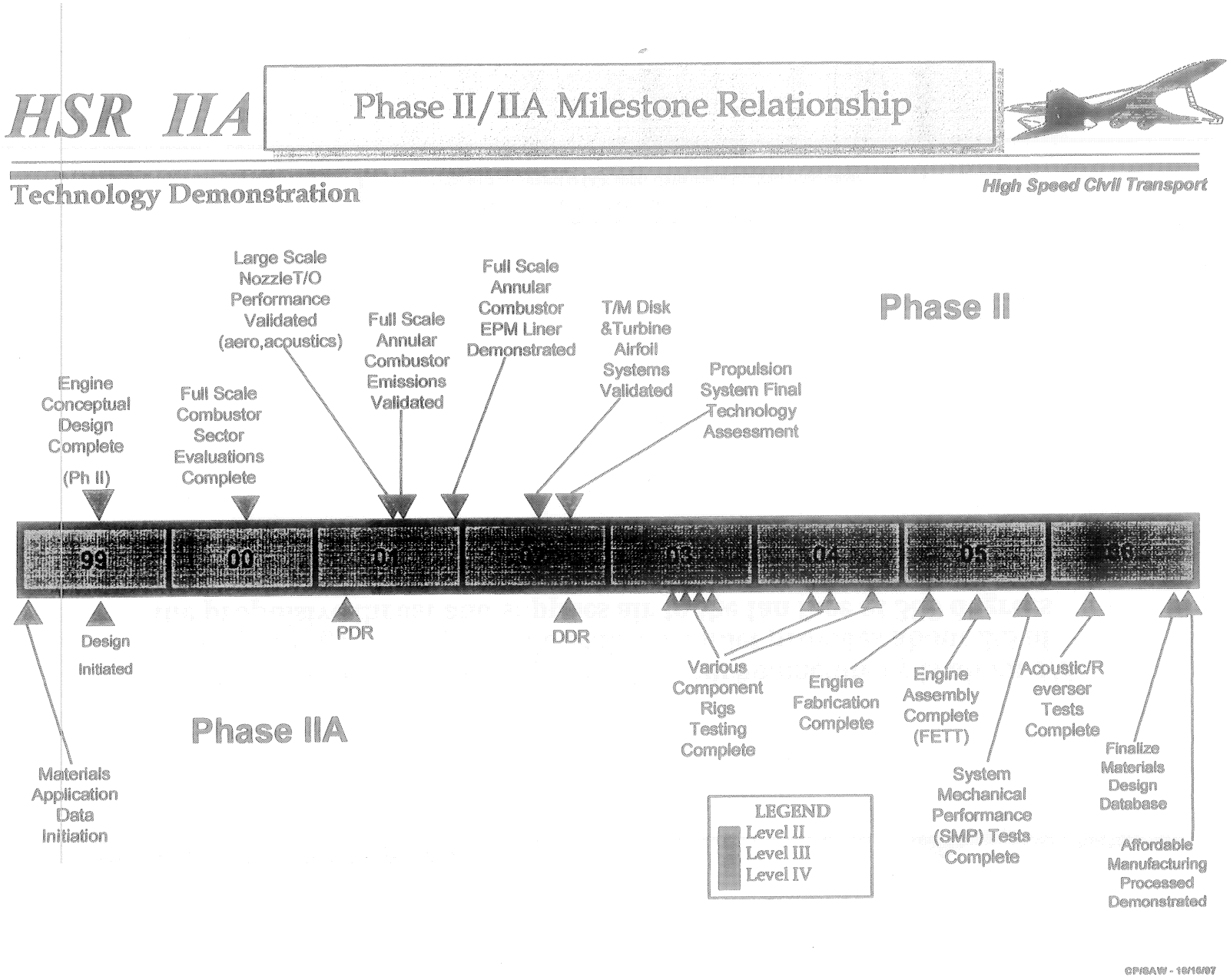
HSR IIA
Phase II/IIA Milestone Relationship
Technology Demonstration
High Speed Civil Transport
Phase II
Engine Conceptual Design Complete (Ph II)
Full Scale Combustor Sector Evaluations Complete
Large Scale NozzleT/O Performance Validated (aero,acoustics)
Full Scale Annular Combustor Emissions Validated
Full Scale Annular Combustor EPM Liner Demonstrated
T/M Disk &Turbine Airfoil Systems Validated
Propulsion System Final Technology Assessment
99
00
01
03
04
05
Design Initiated
PDR
DDR
Phase IIA
Materials Application Data Initiation
Various Component Rigs Testing Complete
Engine Fabrication Complete
Engine Assembly Complete (FETT)
System Mechanical Performance (SMP) Tests Complete
Acoustic/Reverser Tests Complete
Finalize Materials Design Database
Affordable Manufacturing Processed Demonstrated
LEGEND
Level II
Level III
Level IV
CP/SAW - 10/16/97

HSCT
HIGH SPEED CIVIL TRANSPORT

HSCT PROPULSION SYSTEM ENGINE CORES ARE VERY LARGE

The Large Size of HSCT Propulsion Systems May Require Advances In Material Processing and Component Manufacturing/Repair Technologies

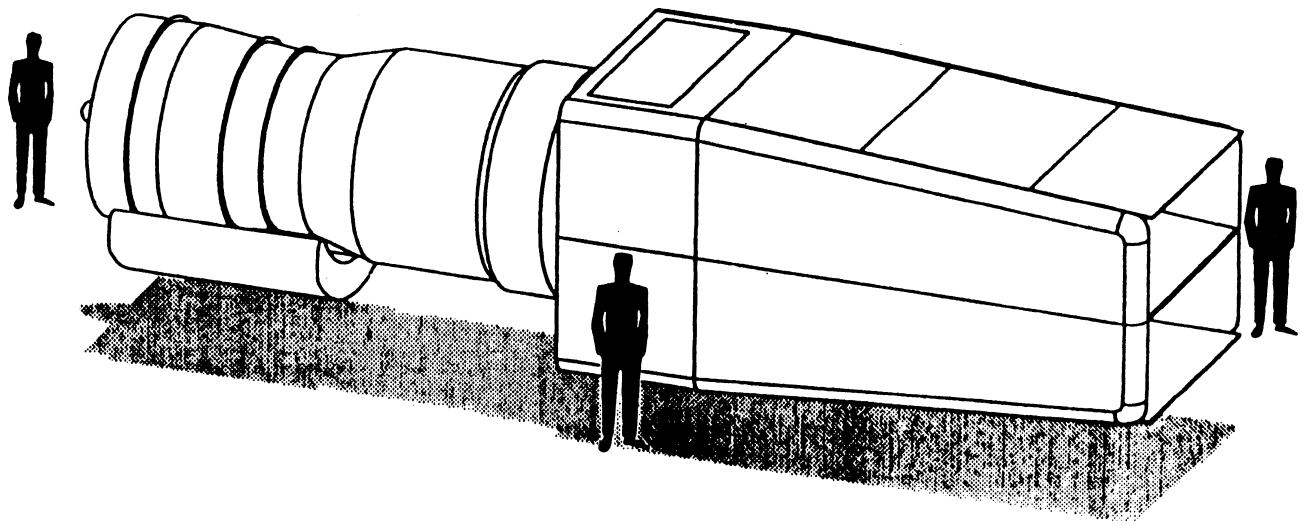

HSCT
HIGH SPEED CIVIL TRANSPORT

SLIDE 3

The engine size will be around 800lb/sec and 55000lbs thrust. The fan diameter will be close to a CFM. The core size will be about 525 lb/sec or about 2X current "big"(100,000lb thrust class) commercial turbofans. Note the small "apartment" size exhaust nozzle!

Supersonic Mission Tougher

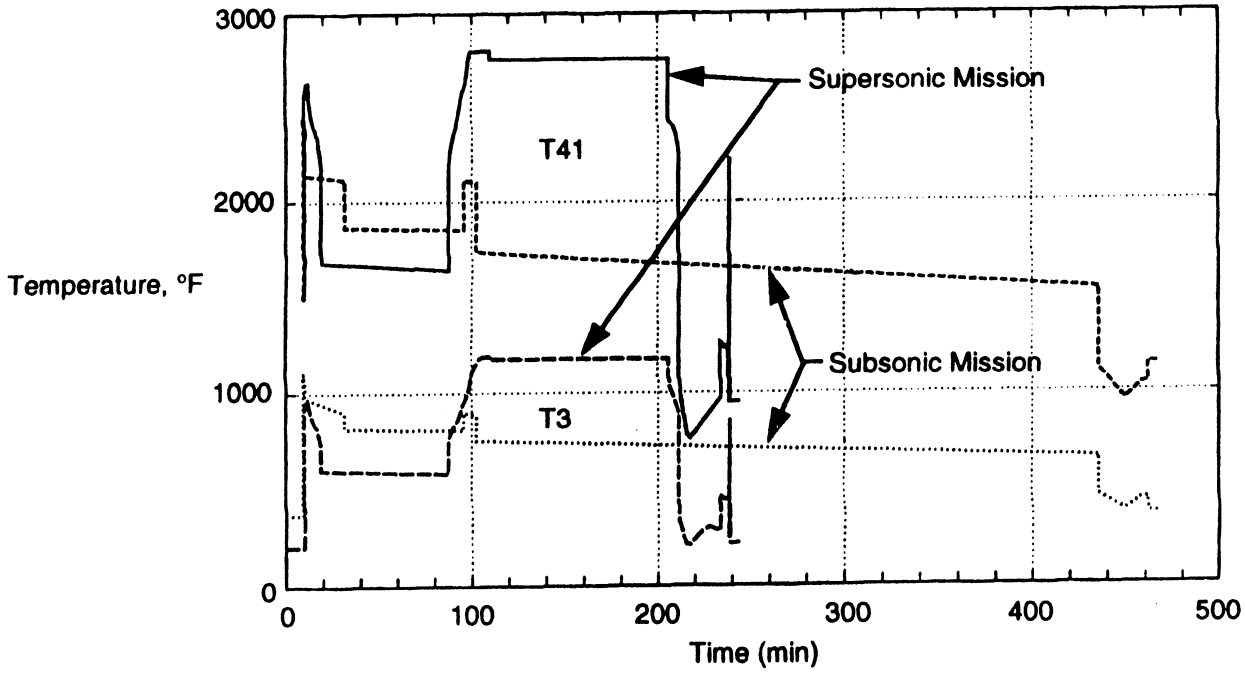

HSCT propulsion system components must operate at max cycle temperatures and stress levels for ≈ 9000 hot hours or 30x that of current commercial transport engines and tactical fighter engines

SLIDE 4

High temperature durability is the issue in supercruise engines. The engine is oversized at takeoff for low noise so temperature requirements here are no more severe than for subsonic engines. To supercruise at 70000 ft where the air is thin the cycle temperatures are very high to generate thrust. The hot section will suffer especially, but the whole engine is hot due to the 380 degree inlet temperature. The other point is that a subsonic engine is hot for 2 minutes at takeoff and the sumps never have time to get full hot. This engine sets at its highest cycle temperatures for hours.

HSCT

HIGH SPEED CIVIL TRANSPORT

WEIGHT IS EXPENSIVE ON HSCT @ MO 2.4

COMPARISON:	HSCT	A340-300
ENGINES	4	4
PAC	300	295
RANGE	5000 KM	5000KM
MTOW	765000 LB	556580 LB
BLOCK FUEL	328064 LB	137362 LB
PAC	66000 LB	64900 LB
PAC/FUEL	20.1%	47.2%
	162 GAL/PASSENGER	69 GAL/PASSENGER

FUEL COST IS ABOUT 2.35 TIMES AS MUCH FOR SAME MISSION

HSCT
HIGH SPEED CIVIL TRANSPORT

SLIDE 5

A supersonic aircraft will use a lot more fuel per payload. A 1 lb weight increase will require about $2200 reduction in selling price per engine to give the same economic return to the airline. This number is as low as $150 per lb on the current subsonic fleet. Weight will be a big issue on the HSCT.

HSCT
HIGH SPEED CIVIL TRANSPORT

HSCT REQUIREMENTS

ALTITUDE:	SLS TO 70000FT	14.696 TO .7PSIA
MACH NUMBER	2.4	T2 = 380F
FAN PR	3.7	T15 = 620F
COMPRESSOR PR	5.7	T3 = 1200F
EGT		T56 = 1800F
ROTOR SPEEDS	100% N2 = 4985RPM 1005 N25 = 7924 RPM	Counter rotating machine
FLUIDS	OIL: MIL-L-23699 100PSIG,450F FUEL: JET A 1500PSIG,300F HYDRAULICS: PFPAE 5000PSIG,650F,1.8SG	

HSCT
HIGH SPEED CIVIL TRANSPORT

SLIDE 6

Typical cycle conditions for the long supersonic leg of the mission. Typical sump pressurization is fan discharge at 620 degrees F and 40 psia. Sink pressure for the tank,sumps, and separators is less than 1 psia. Rubbing speeds for the seals will depend on the final concept selected but in general the speeds will be well within current experience.

HSCT
HIGH SPEED CIVIL TRANSPORT

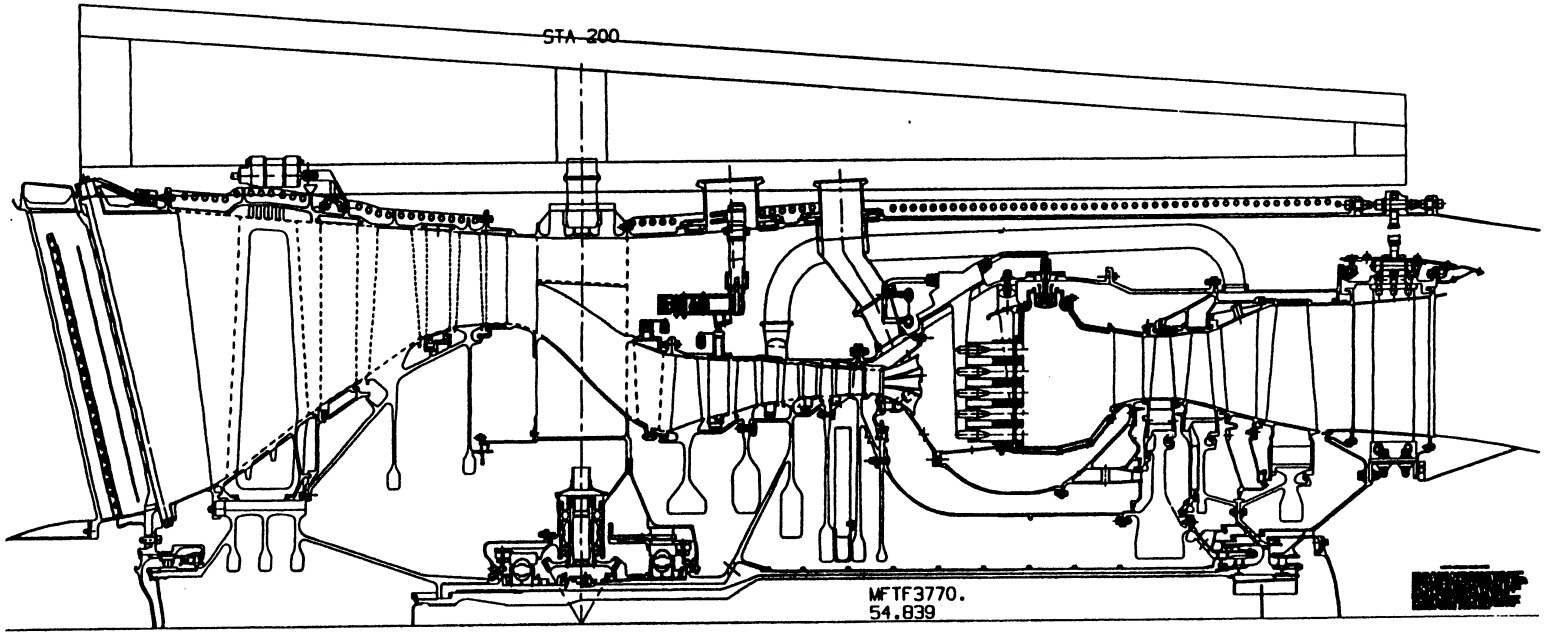

TURBOMACHINERY WITH LPP COMBUSTOR

HSCT
HIGH SPEED CIVIL TRANSPORT

SLIDE 7

Conceptual engine is a mixed flow turbofan with carbon seal sumps, and labyrinth air seals. Air seal pressure drops are low compared to high bypass subsonic engines due to temperature limitations for long life. Overall pressure ratio is about 20 :1.

HSCT
HIGH SPEED CIVIL TRANSPORT

TURBOMACHINERY SEAL "TOOLBOX"

AIR SEALS : LABYRINTH SEALS
BRUSH SEALS
STATIC SEALS

SUMP SEALS: FACE CARBON SEALS
BORE CARBON SEALS
INTER SHAFT CARBON SEALS
INTER SHAFT LABYRINTH

SELECTION BASIS: 1) DOC + I
COST
WEIGHT
MAINTENENCE COST
PERFORMANCE
2) EXPERIENCE

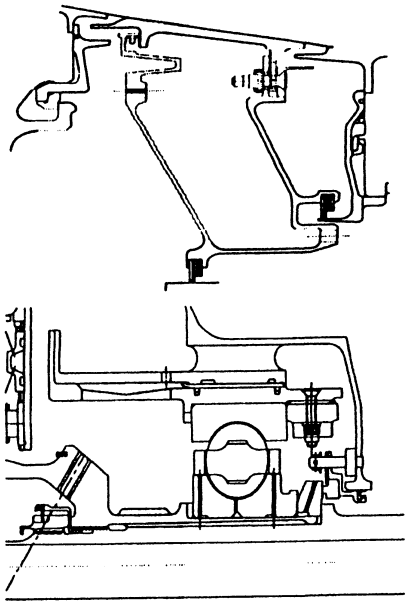

HSCT
HIGH SPEED CIVIL TRANSPORT

SLIDE 8

"Toolbox" of seals under design consideration for the HSCT turbomachinery. The final selections will be made considering DOC+I ($) , experience, and unique demands.

HSR - CPC

Mechanical Systems Design Review

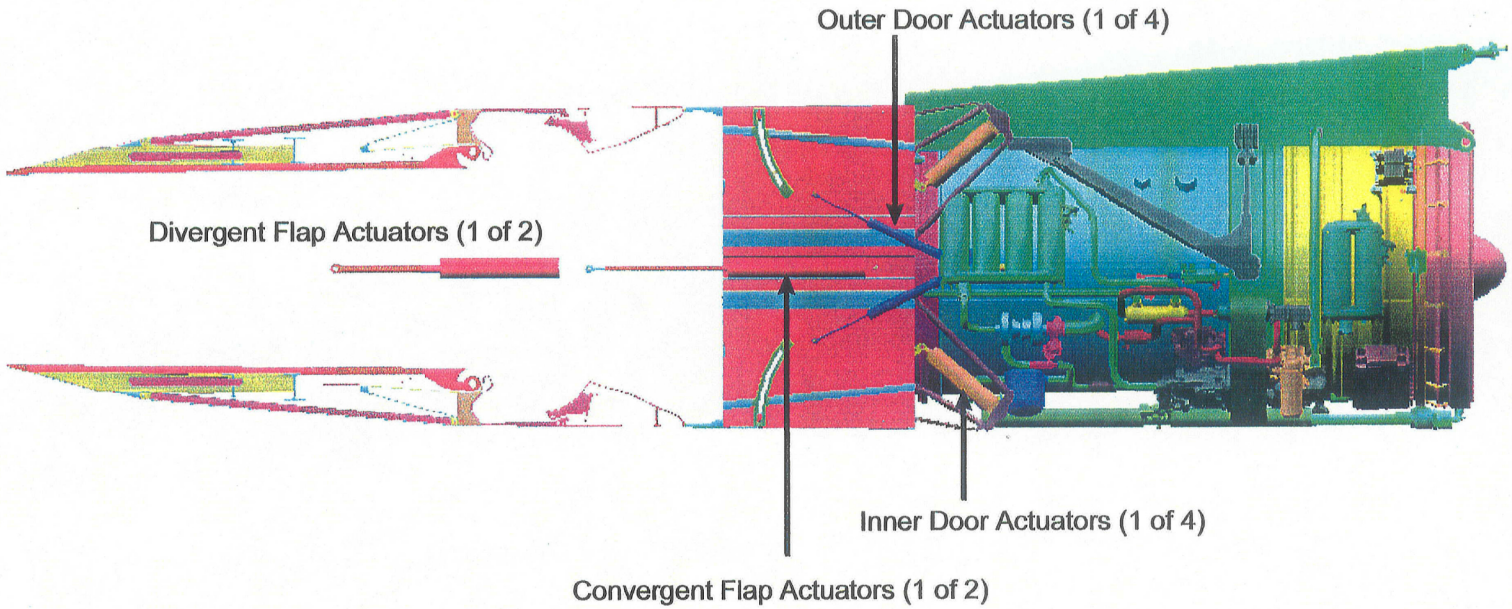

Engine and Nozzle, Engine Accessory Side

Oct 8, 1997

HSR - CPC

Mechanical Systems Design Review

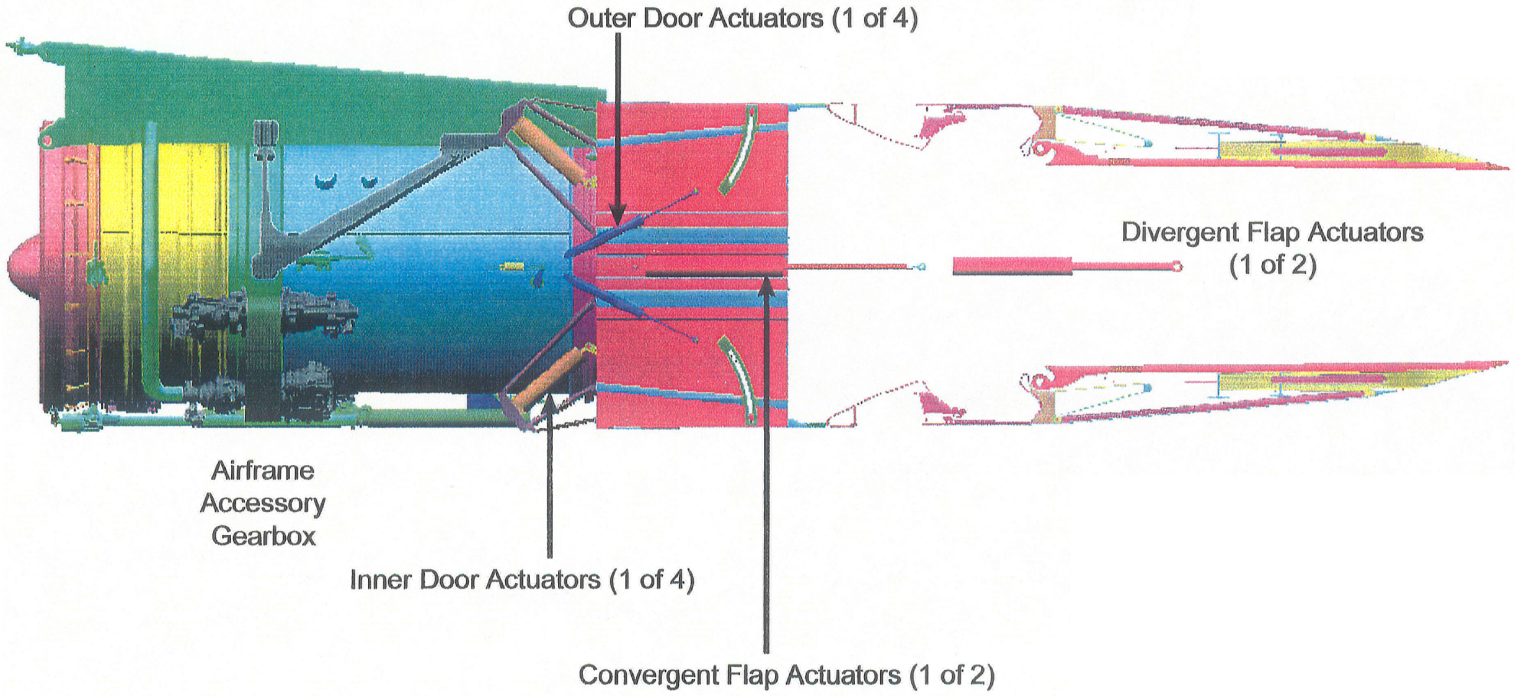

Engine and Nozzle, Aircraft Accessory Side

Oct 8, 1997

HSR II -CPC **Controls Technology Metric P-X1**

Technology Tracking and Assessment

Lightweight-Material Actuator Weight / Steel Actuator Weight

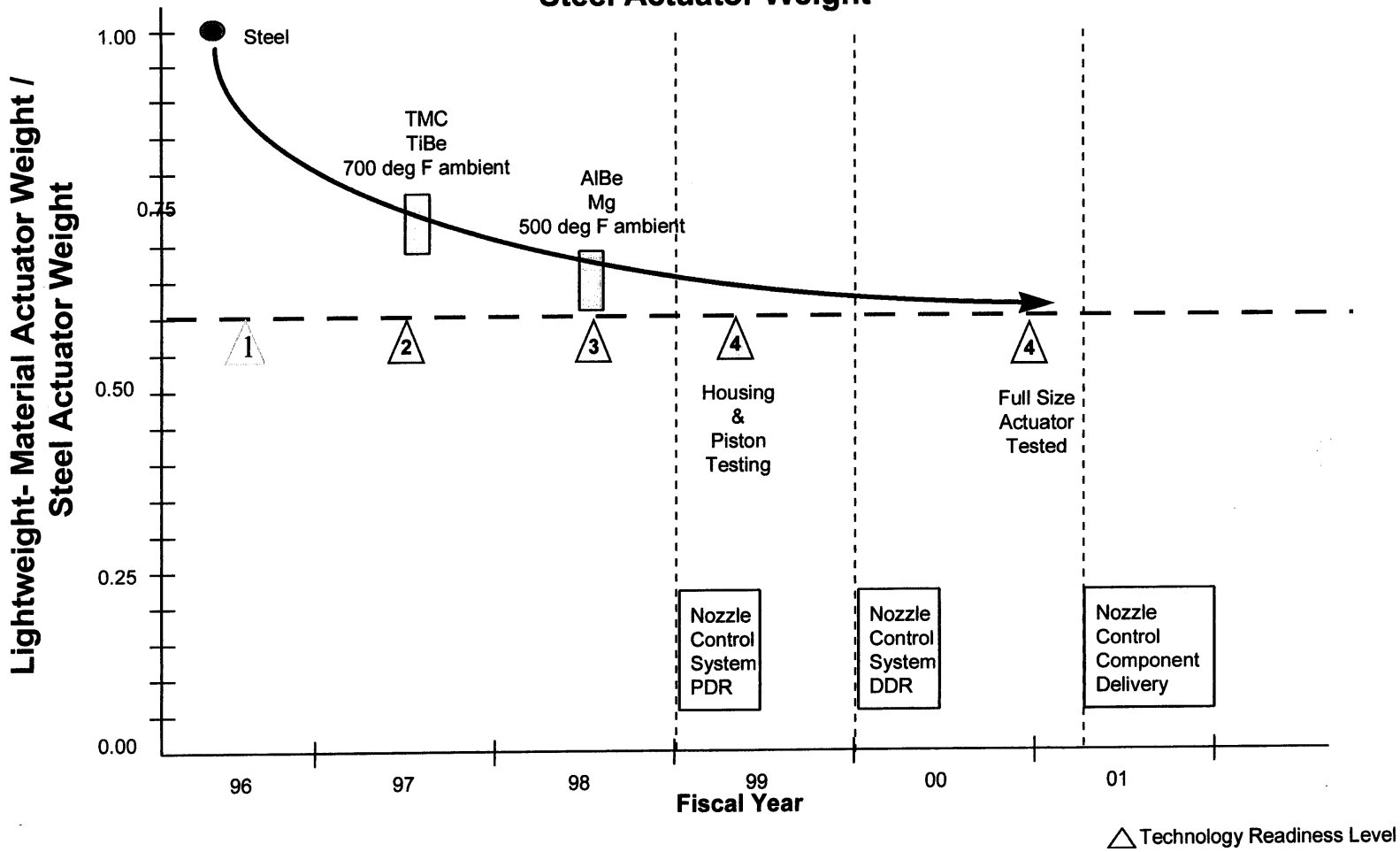

FILE: METRICS2.PPT 09/19/97

SLIDES 10 AND 11

These are metric charts for the external actuators and seals. They show the advancement in temperature capability and reduction in weight expected to get to the HSCT level of technology required.

HSR II -CPC **Controls Technology Metric P-X2**

Technology Tracking and Assessment

Actuator Seal Temperature Capability Verification

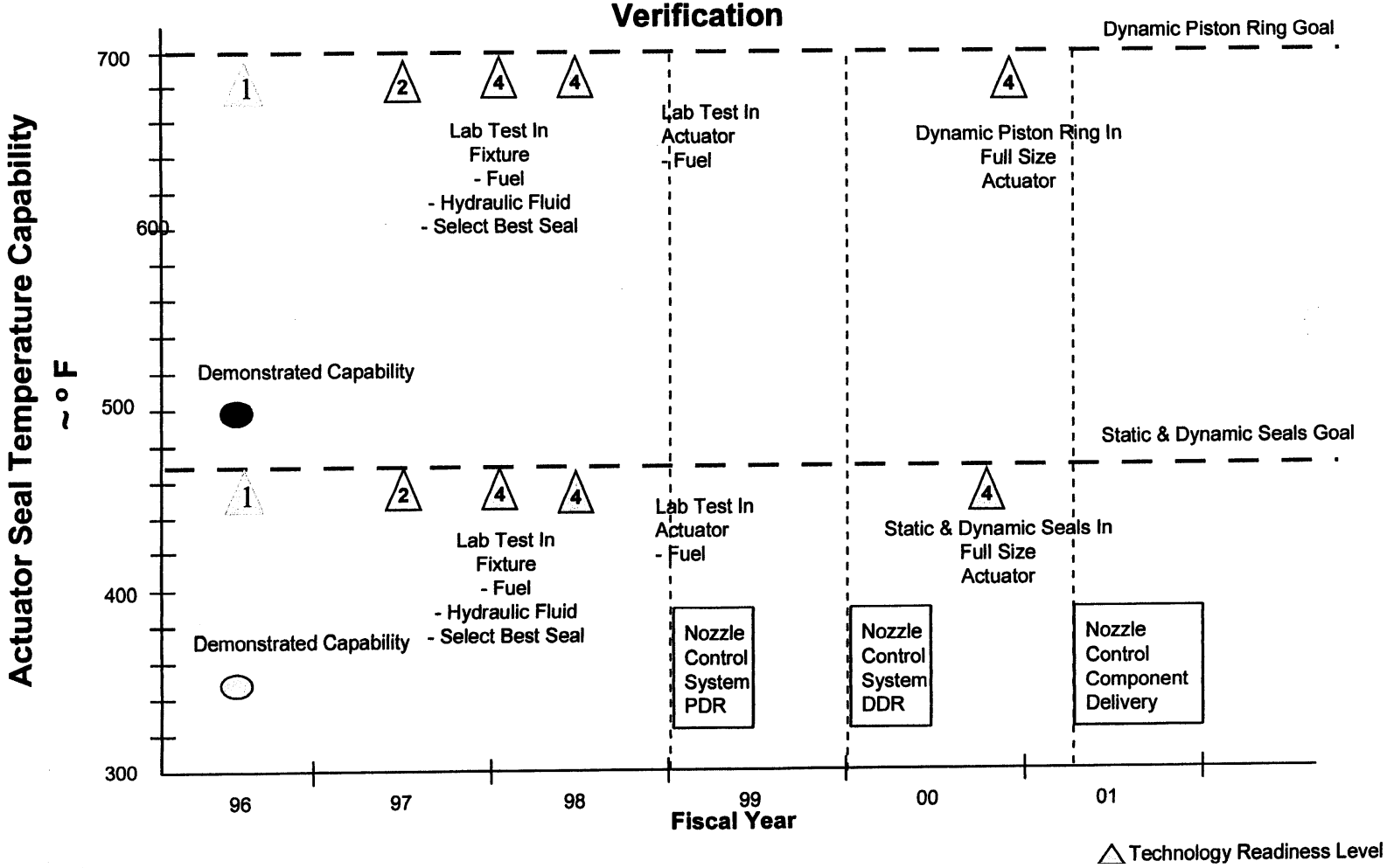

FILE: METRICS2.PPT 09/19/97

Mission: Establish Technology Readiness by 2001 of Viable, Ultra-Low NOx, High Efficiency Combustor

- NOx emissions
  - Supersonic cruise NOx EI below 5
  - Subsonic cruise NOx EI below current best technology
  - Meet EPAP (tentatively, using 1984 supersonic proposed)
- CO and UHC emissions
  - Meet EPAP (tentatively, using 1984 supersonic proposed)
- Combustion efficiency
  - 99.9% during supersonic cruise
  - 99.5% during subsonic cruise
  - 99% everywhere on mission profile
- Life
  - 9000 hours

Supersonic Cruise NOx EI
Current technology, Goal, & HSCT LPP sector data

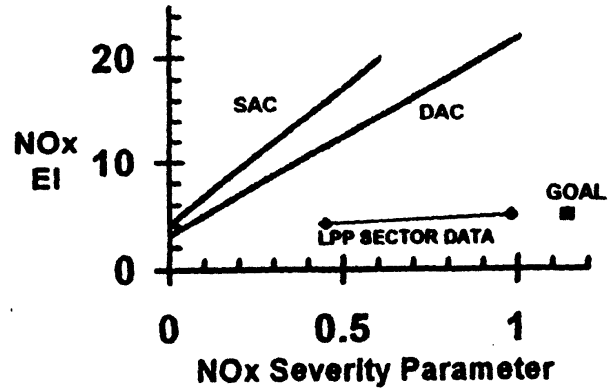

Cruise emissions goal requires an 85% reduction in NOx EI from current technology

HSCT
HIGH SPEED CIVIL TRANSPORT

SLIDE 12

Since the HSCT must fly in the stratosphere NOx generation at supersonic cruise has been limited to 5EI. This required an "invention " in combustor technology. The liners can leak little or no air into the initial combustion zone. GE has demonstrated this low level of NOx using an LPP(lean premixed/prevaporized) approach. Either CMC or high temperature metallic combustor liners can be used depending on the life requirements accepted.

HSR-EPM

Combustor Liner Materials Development Prog.

ID Liner - Hot Pin Attachment Concept

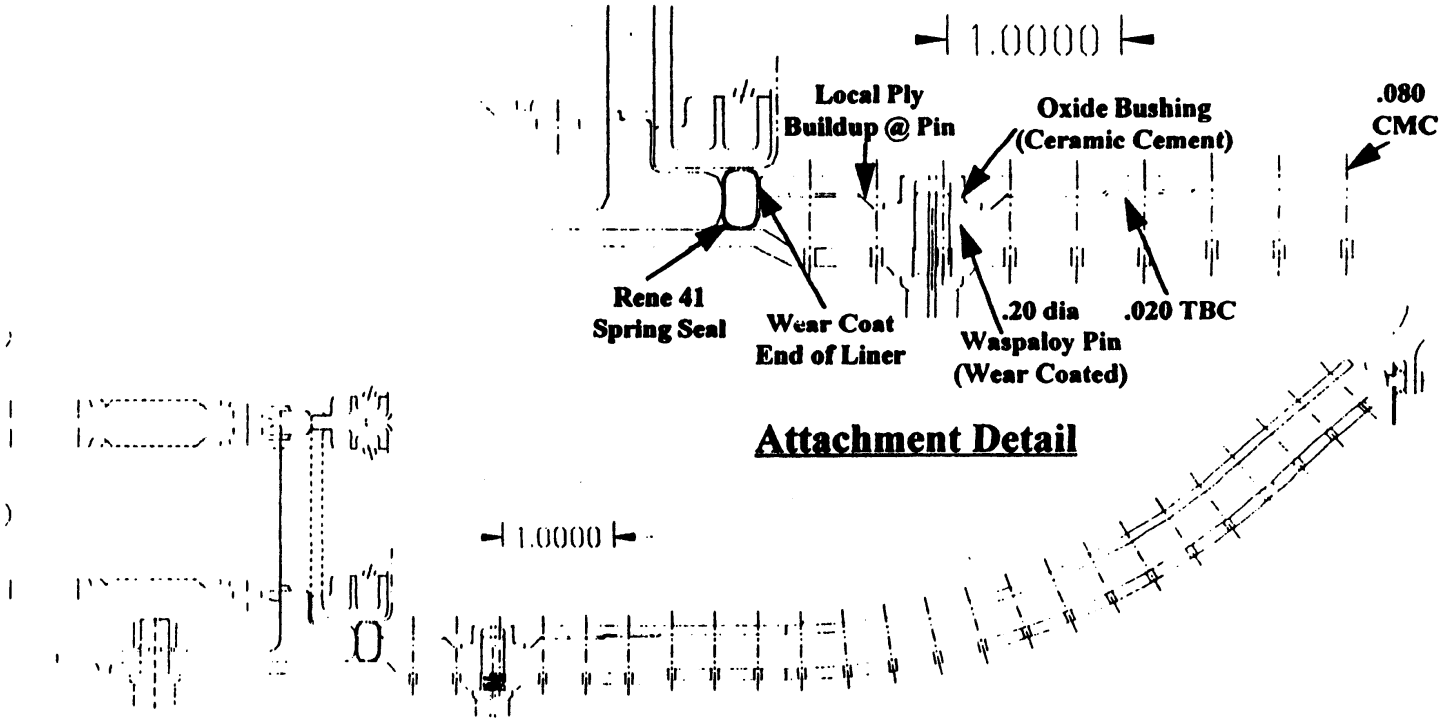

SLIDE 13

This chart shows a conceptual seal for a CMC liner connection to an LPP dome. The real seal is an "invention" TBD if the ceramic liner is downselected next year. Several other attachments are under consideration.

EPM *Combustor Back-Up Materials Program*

LPP Shingle Axial Spline Seal Design Concept

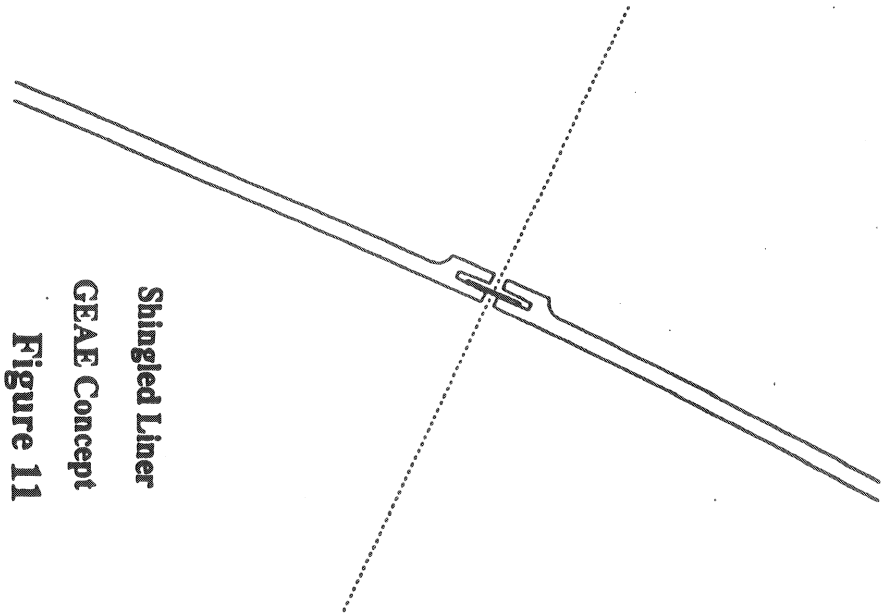

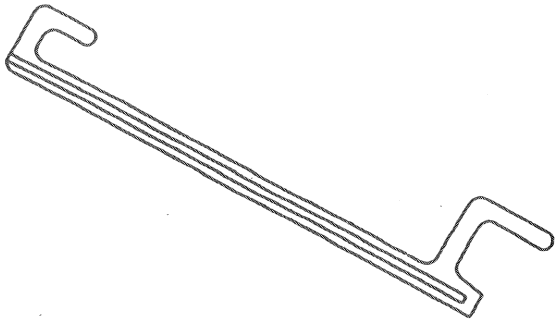

Shingled Liner
GEAE Concept
Figure 11

- Retained by Aft hook on upstream shingle.
- Conventional Design - Results in ~.002 equivalent gap width.
- Easy to assemble/Good Compliance
- Seal Strip Material: HS188 or L605
- Relatively low delta pressure loading could result in accelerated wear.

HSCT
HIGH SPEED CIVIL TRANSPORT

SLIDE 14

This slide shows a segmented metal liner with a rather conventional spline seal. The seal may be as little as an overlap to a more sophisticated "cloth"seal developed at GE CR&D), depending sector test data on allowable leakage. "Cloth" seals will be tested on a CFM56 sector test with segments incorporated into the aft end of the combustor liner.

HSCT
HIGH SPEED CIVIL TRANSPORT

SUMMARY

1) The big drivers for the HSCT seal design will be weight, cost, durability, temperature, and size.

2) The controls and actuation systems sealing requirements are challenged by temperature, size, pressure levels, and durability.

3) The combustor static seals may be as simple as an overlap to as complex as an invention.

SEAL DEVELOPMENT FOR THE HSCT COMBUSTOR

David C. Jarmon
United Technologies Research Center
East Hartford, Connecticut

The combustor section of the High Speed Civil Transport (HSCT) requires high temperature seals to minimize leakage between CMC components. The temperature requirements range from 1500°F to 2100°F and the compression requirements range from 10% to 50% . Three distinctly different Nextel braided seals have been developed to seal areas such as the bulkhead heatshields and lean zone outer liner. The seals range from 0.10" dia. rope to triangular braid with 1" sides. The development of these seals is the result of a collaborative effort between Pratt & Whitney, FTS Inc., Techniweave Inc. and United Technologies Research Center.

The specific requirements in terms of temperature, sealing and compression at various combustor locations will be presented. The architectures of braided Nextel seals developed to meet these requirements will be described and microstructures will be shown. Compression and sealing data will be related to the application for the various seals. Selected seals have metal wires incorporated into the architecture to enable brazing to the metallic superstructure. The results of brazing trials on these seals will be discussed.

The combustor section of the High Speed Civil Transport (HSCT) requires high temperature seals to minimize leakage between CMC components and the metal support structure. The approach to developing seals has been to build upon the Nextel braided seal work at NASA Lewis under the direction of Bruce Steinetz. A team consisting of the following companies has been working on combustor seals during 1997: Pratt & Whitney (technical direction & brazing), United Technologies Research Center (task management and benchmark testing), FTS, Inc. (analysis & modeling), Stress Engineering Services (flow requirements), and Techniweave Inc. (seal fabrication). To date, this team has defined the basic seal requirements, obtained seals, and benchmark tested these woven seals. The development has focused on the Rich Zone-Quench-Lean Zone (RQL) combustor design with the near-term task of providing seals for a NASA RQL sector rig test.

The RQL sector rig requires three types of Nextel braided seals. First, a triangular braid seal composed of Nextel 720 will seal between the liners in the lean zone outer liner. The sealing requirements in this area are low; however, the temperature requirements are high (2400°F). The triangular braid seals experience low compression and act mainly as a heat shield for the metal support structure. Second, Nextel 720 rope seals with a diameter of 0.080" are needed along the edges of the lean transition inner liner. These seals are expected to get compressed approximately 20% and be exposed to temperatures up to o 2100°F. Third, Nextel 550 rope seals with a diameter of 0.100" are required for the bulkhead heatshield, sidewalls, and in the metal retention grooves of the lean zone outer liner. These seals may experience compressions of up to 50%.

The remainder of the discussion will focus on the rope seals since they present the most significant development challenge. The rope seals must be able to balance compression requirements with permeability requirements. In other words, the seals must minimize gas leakage while being able to be compressed with low force. The 0.100" diameter rope seals in the lean zone outer liner will be compressed 70% at room temperature and to 50% at 2200°F. In addition, one side of rope seals need to be able to seal against the rough surface of the SiC/SiC composite, while the other side is bonded to the metal support structure.

Bonding of the rope seals to the metal support structure is required for assembly and positioning. This bonding is accomplished by incorporating longitudinal metal wires

along one side and brazing these wires to the support structure. Techniweave, Inc. has successfully woven Inconel 600 wire into the rope seals, and Pratt & Whitney has successfully brazed these seals to Inconel 625 panels using a vacuum furnace. The Inconel wire must be exposed on the surface of the rope seal for a good braze bond to be obtained. Techniweave also developed procedures for incorporating colored tracer fiber on the opposite side of the brazed wires to facilitate positioning for brazing.

Based on Pratt & Whitney's requirements, Techniweave has woven eleven variations of the 0.100" diameter rope seal. The rope seal consists of an inner core of unidirectional fibers and an outer region of over-braid. The unidirectional core has low permeability and the outer over-braid provides compressibility while holding the seal together. In order to produce a highly compressible weave, the unidirectional core was completely left out of rope seal #9. The various weaves were compression tested and flow tested at UTRC. The compression testing involved compressing the 0.100" diameter seal to 0.080", 0.070", 0.060" and 0.050". Three loading repetitions were performed at each compression distance, and a virgin section of braid was used at each distance. Several of the early rope seals required in excess of 900 lb per inch to be compressed 50%, which was unacceptably high for the lean zone outer liner. The hollow core rope seal (#9) required only 31 lb per inch to compress 50%, with only a 0.021" permanent set after three compression cycles.

Flow testing was performed by compressing a circular section of rope seal to the desired thickness between two metal plates. The rope seal ends were joined with RTV sealant in order to insure that the gas flow was within the rope seal. The gas flow was increased in the flow test fixture until the desired gas pressure was achieved and held (1 to 10 psi). The gas flow required to maintain a constant pressure was recorded. Using this procedure, the leakage rate as a function of gas pressure and percent compression was measured for several of the rope seals. At 2 psi and 50% compression, the hollow core rope seal #9 had a leakage rate of 0.045 SCFM / in. The analysis is in process to determine the acceptable level of leakage for the various locations in the sector rig.

Seal Development for the HSCT Combustor

HSR / EPM Program

Presented By: David Jarmon

Oct. 17, 1997

NASA Lewis Research Center

Cleveland , Ohio

Sealing

Approach

- Define requirements and benchmark test

Status

- FTS and P&W have defined seal requirements
- Techniweave has woven 12 variations of rope seals
- P&W-EH has conducted brazing studies
- UTRC has performed compression & flow tests

Near-Term Future Work

- Wear test to evaluate durability
- Identify "best" woven seals for rig test

Seal Effort Contributors

Technical Director: P&W (Martin Gibler)

Task Management: UTRC (David Jarmon)

Analysis & Modeling: FTS, Inc. (Larry Pauze)

Flow Requirements: Stress Eng. Serv. (Kenneth Waeber)

Seal Fabrication: Techniweave, Inc. (Jim Crawford)

Seal Brazing: P&W (Robert Schaefer)

Benchmark Testing: UTRC (David Jarmon)

Note: Nextel rope seal is based on work at NASA Lewis Research Center by Bruce Steinetz

RQL Nextel Braided Seals Requirements

Component / Location	Shape	Mounting Surface	Temp. (F)	Thickness (inch) Free Standing	Thickness (inch) Com-pressed	Braze Wire	Nextel Fiber	Sealing Requirement
Lean Transition Inner Liner: Along both edges	round	flat surface	2100	0.080	0.060	Yes	720	Moderate
A) Bulkhead Heatshield: Along top edge B) Bulkhead Heatshield: Around holes C) Sidewalls: Around four edges	round	flat surface	1800	0.100	0.080	Yes	550	A) Moderate B) Moderate C) High
Lean Zone Outer Liner: Between liners	triangular	triangular slot	2400	0.160 sq. in.	0.127 sq. in.	No	720	Low
Lean Zone Outer Liner: In metal retention groove	round	groove	1500	0.100	0.080" to 0.050"	Yes	550	Moderate

Lean Zone Outer Liner

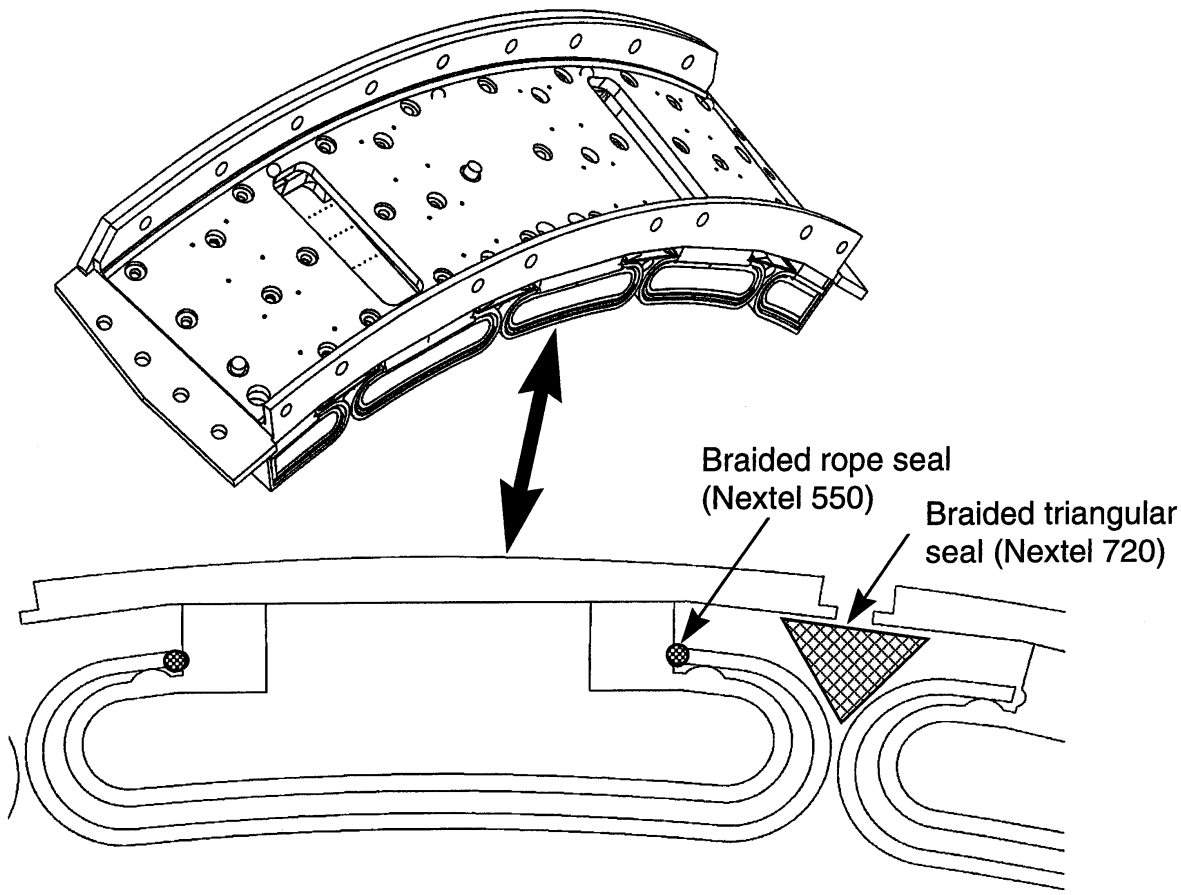

Rope Seal in Lean Zone Outer Liner at RT & 2200°F

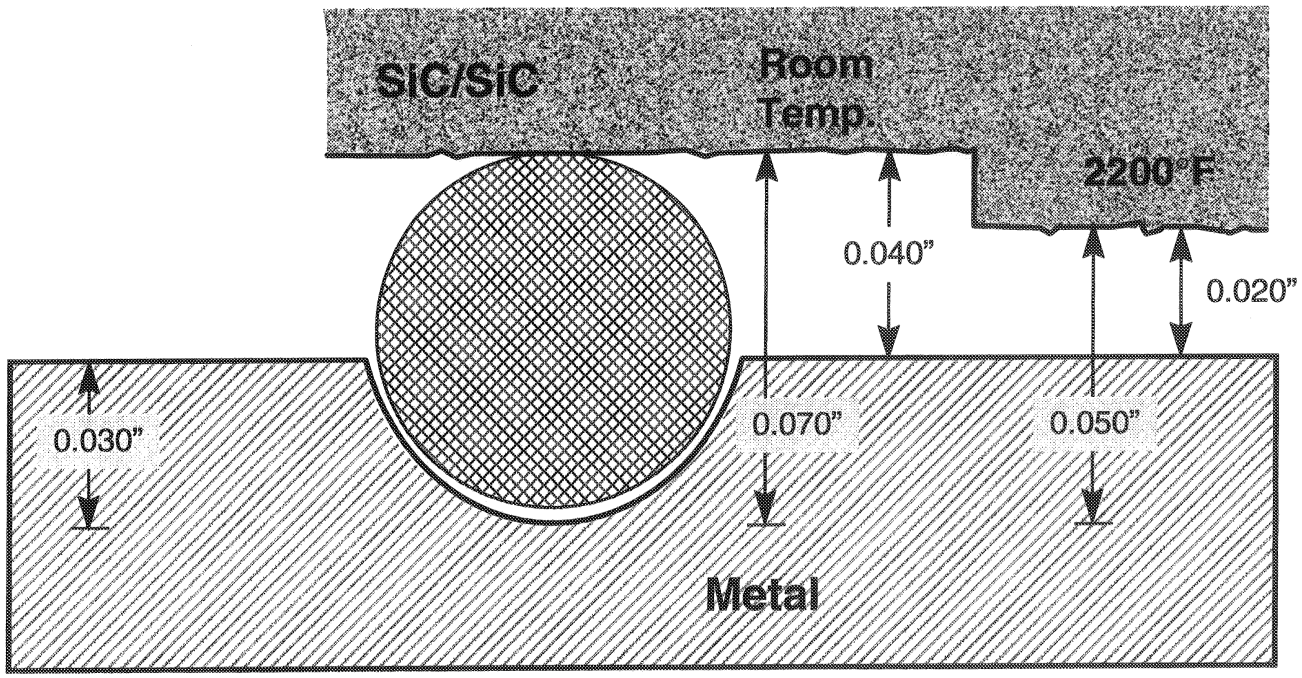

Microstructure and Surface Profile of MI SiC/SiC

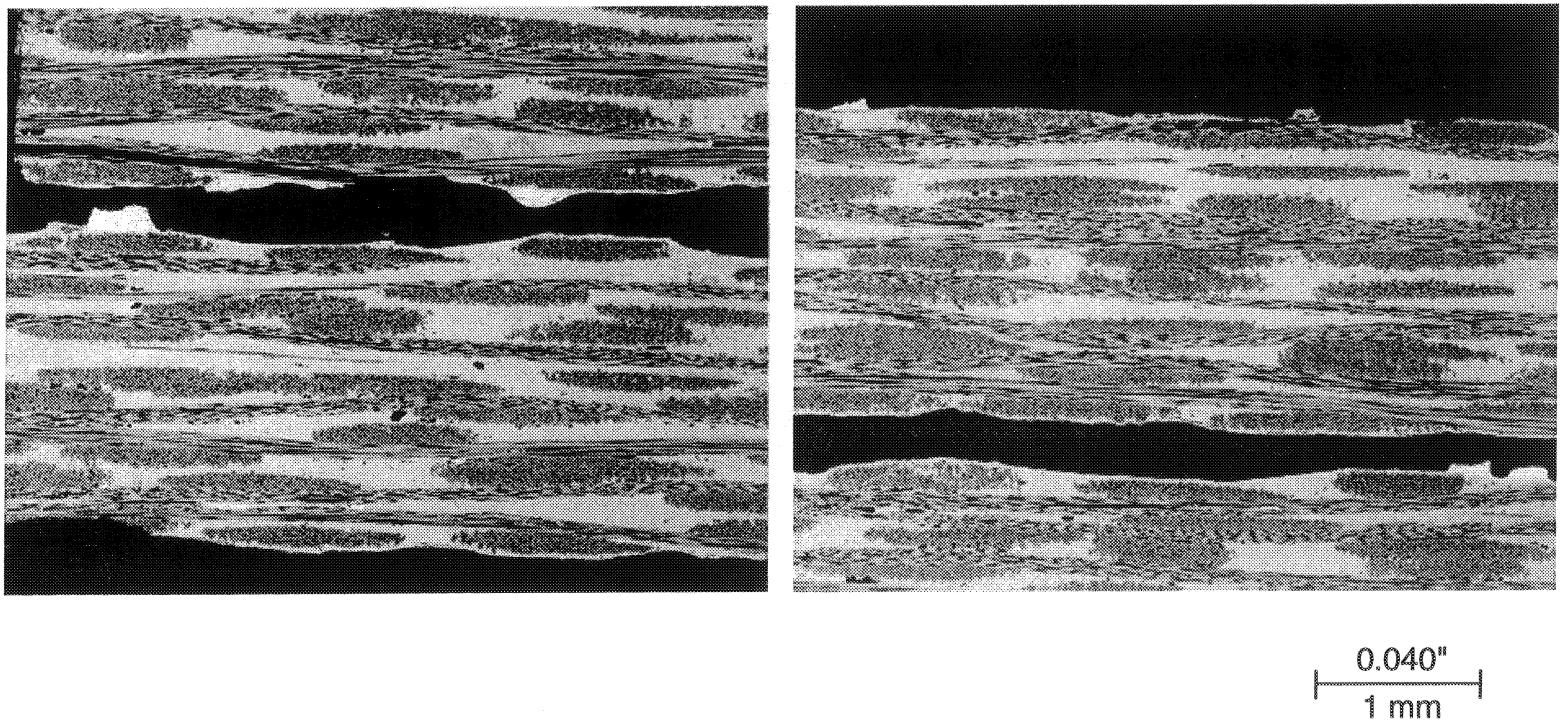

Rope Seal Structure

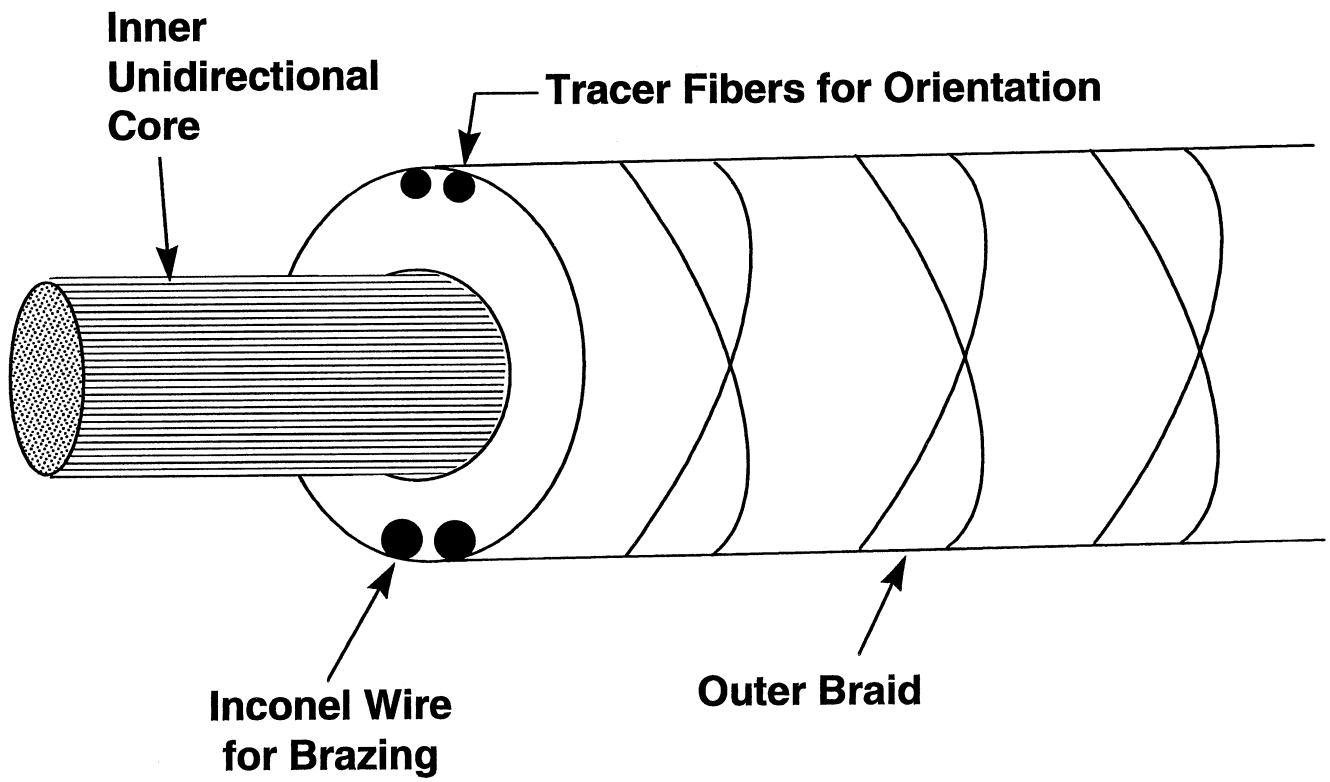

Braid Rope Seals

Inconel 600 Wire for Brazing

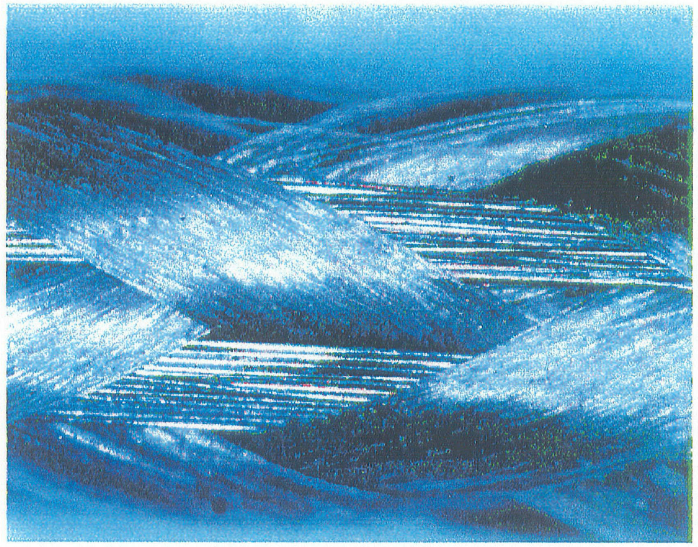

Type 12

Red Tracer Fibers for Orientation

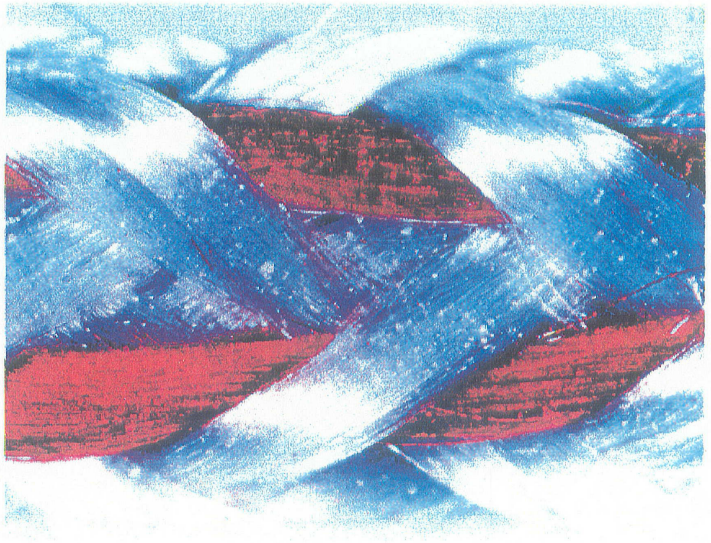

Type 10

0.040"
1 mm

DCJc97-24.cdr

Braided Rope Seals

Filled Core for Decreased Permeability

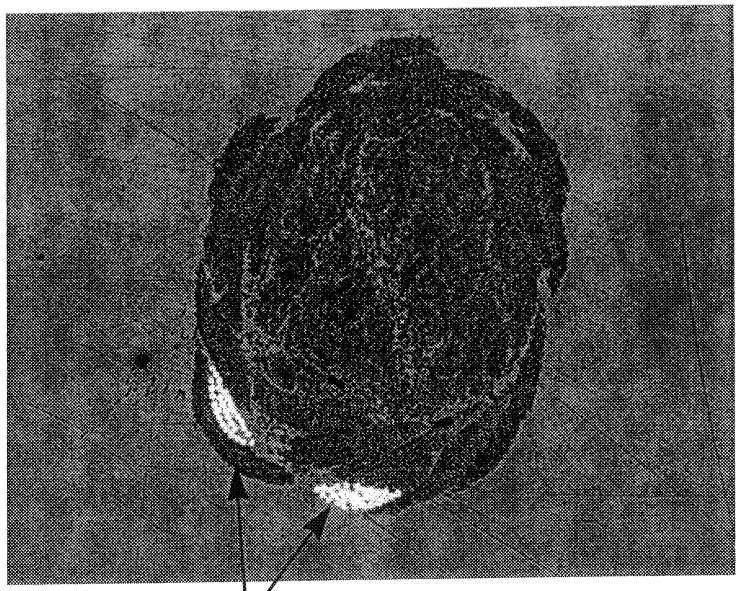

Type 10

Inconel 600 wire for brazing

Hollow Core for Maximum Compressibility

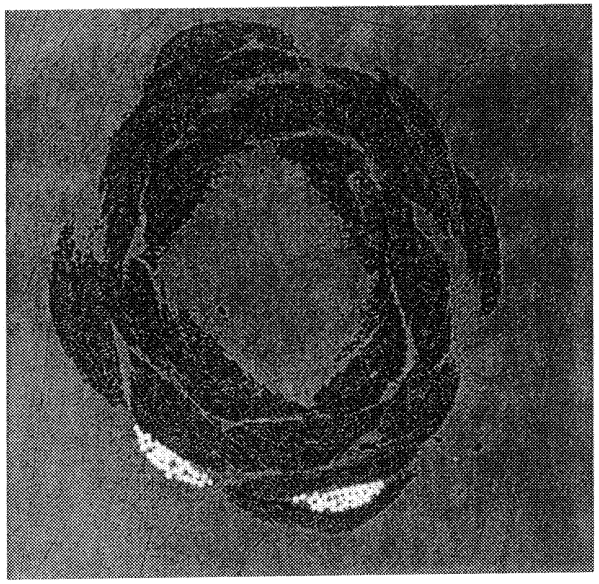

Type 9

0.040"
1 mm

Compression of Rope Seal No. 4 From 0.100" to 0.080"

(3 Repetitions)

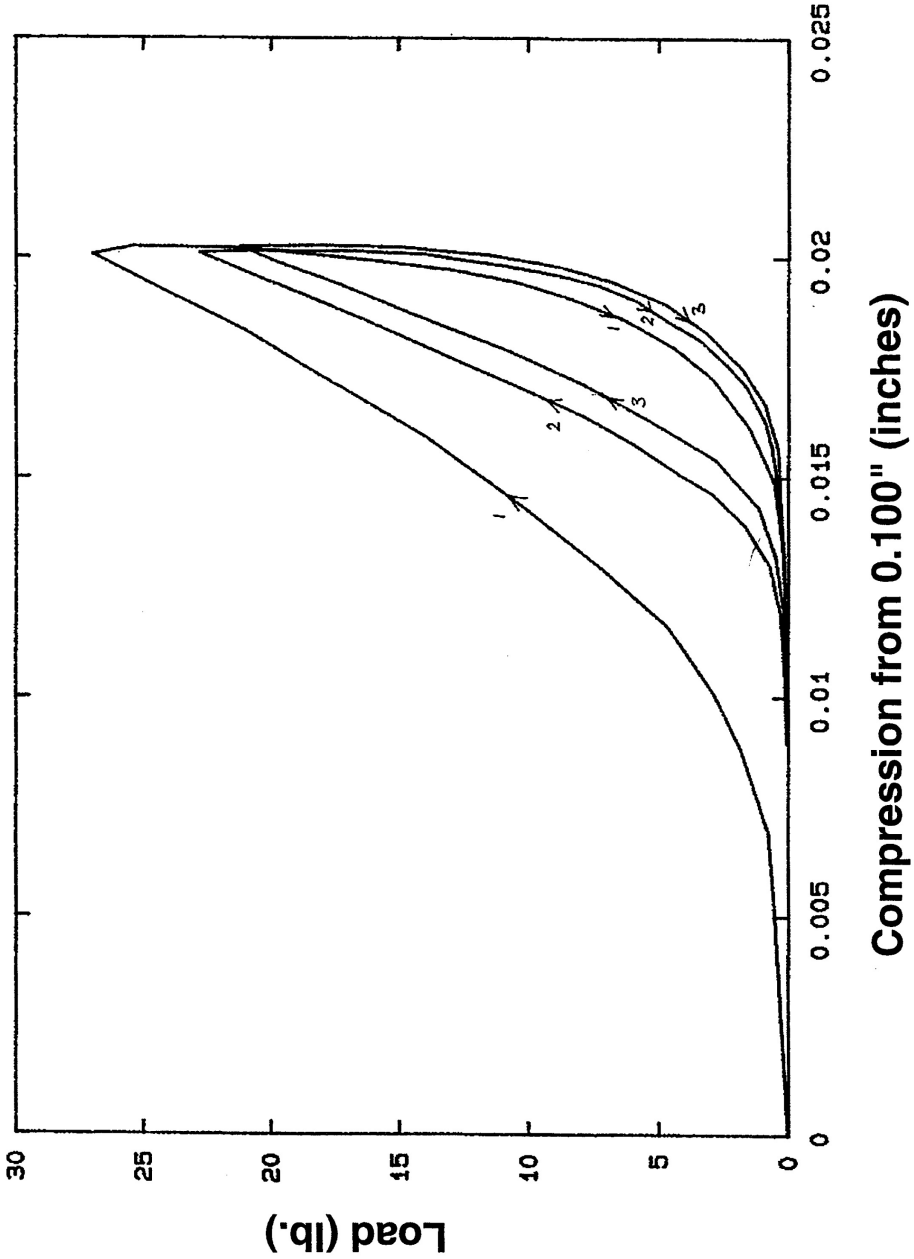

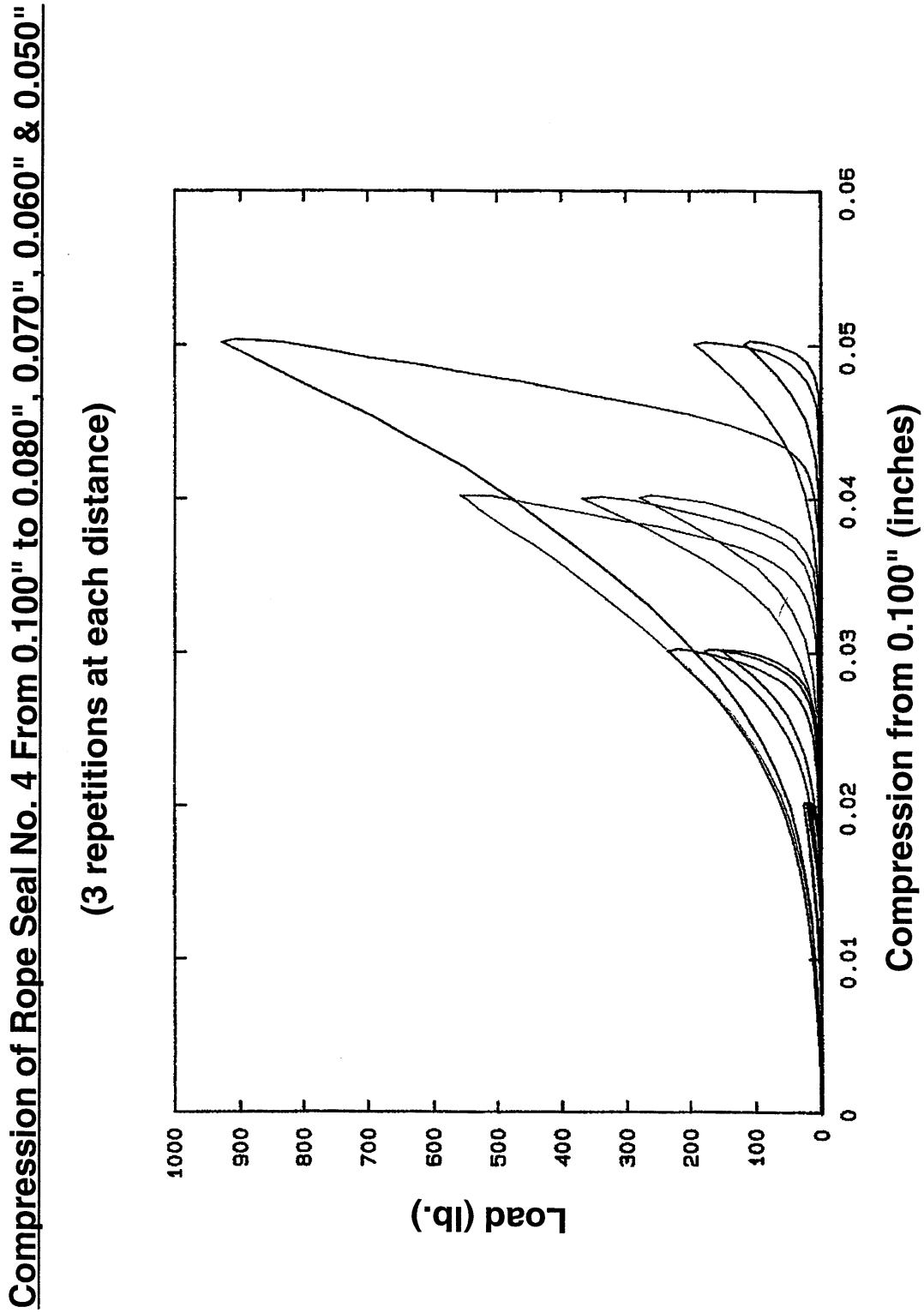
Compression of Rope Seal No. 4 From 0.100" to 0.080", 0.070", 0.060" & 0.050"
(3 repetitions at each distance)
Load (lb.)
1000
900
800
700
600
500
400
300
200
100
0
0
0.01
0.02
0.03
0.04
0.05
0.06
Compression from 0.100" (inches)

Rope Seal Compression Load and Set
Compression Cycle at 50% Compression

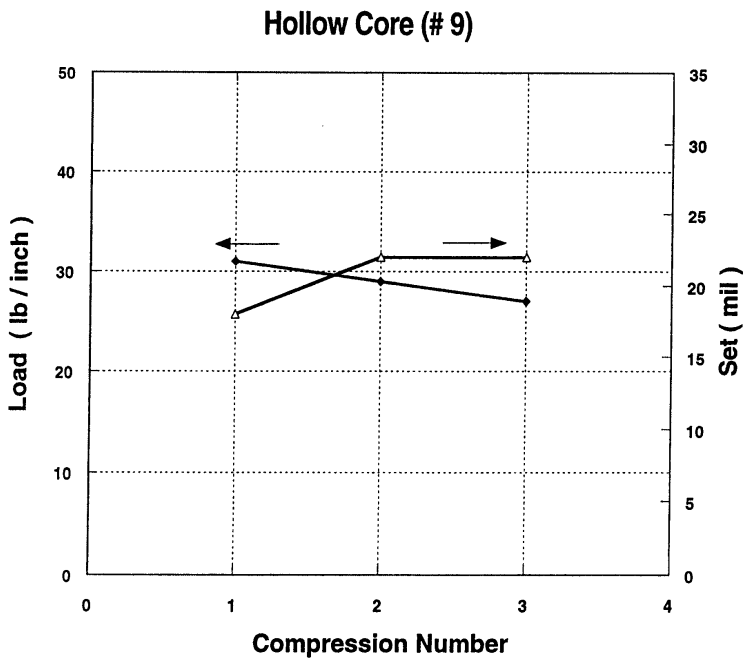

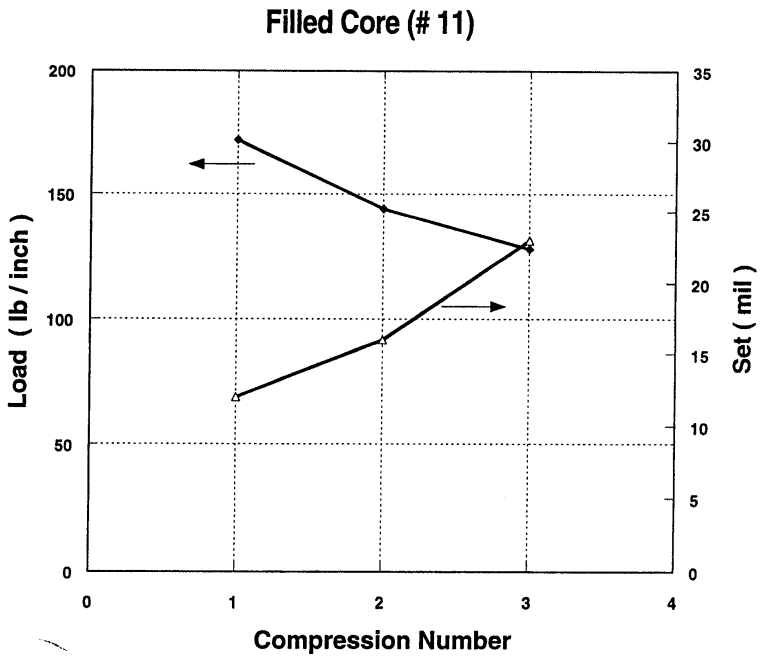

Braid Seal Flow Test Rig

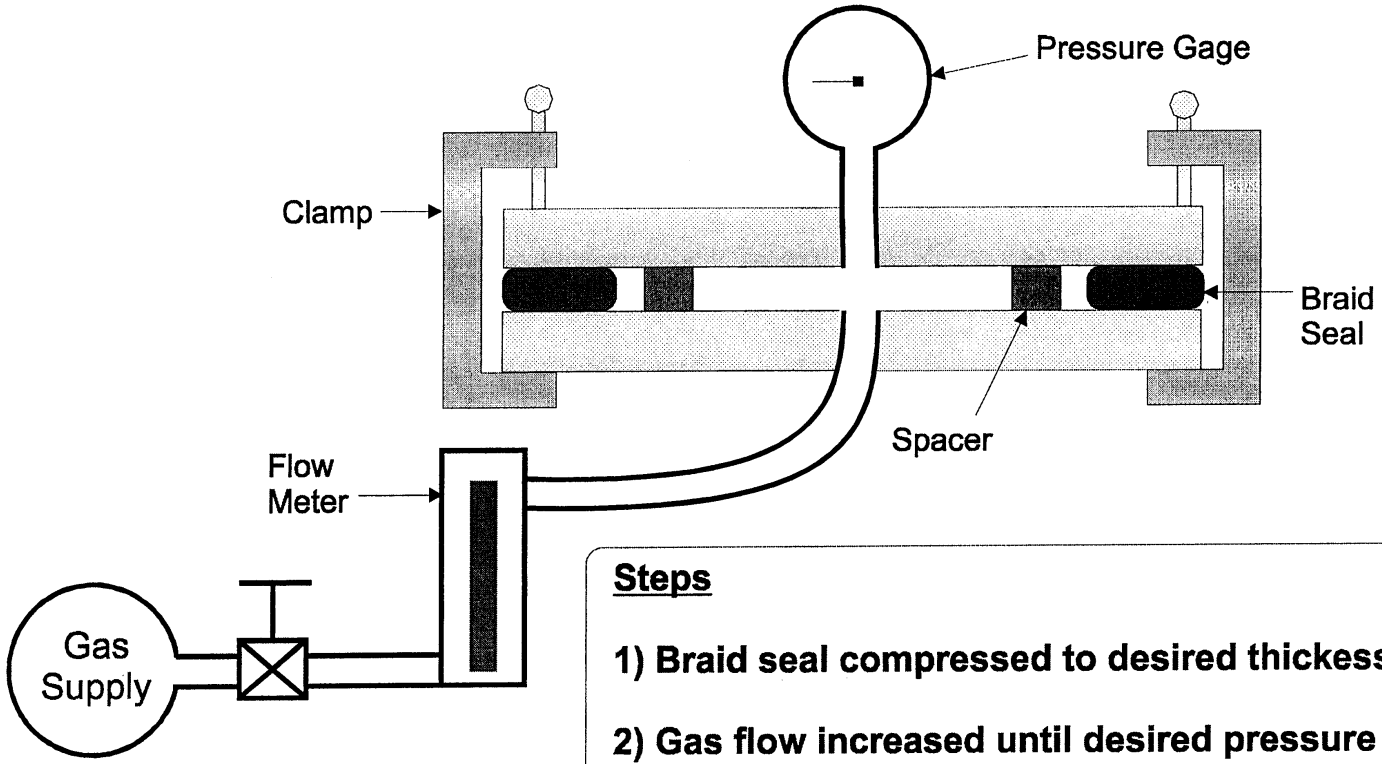

Steps

1) Braid seal compressed to desired thickess

2) Gas flow increased until desired pressure achieved (1 to 10 psi)

3) Record flow

Load and Flow Data as a Function of Compression for Hollow Core Nextel Rope Seal No. 9 at 2 psi Gas Pressure

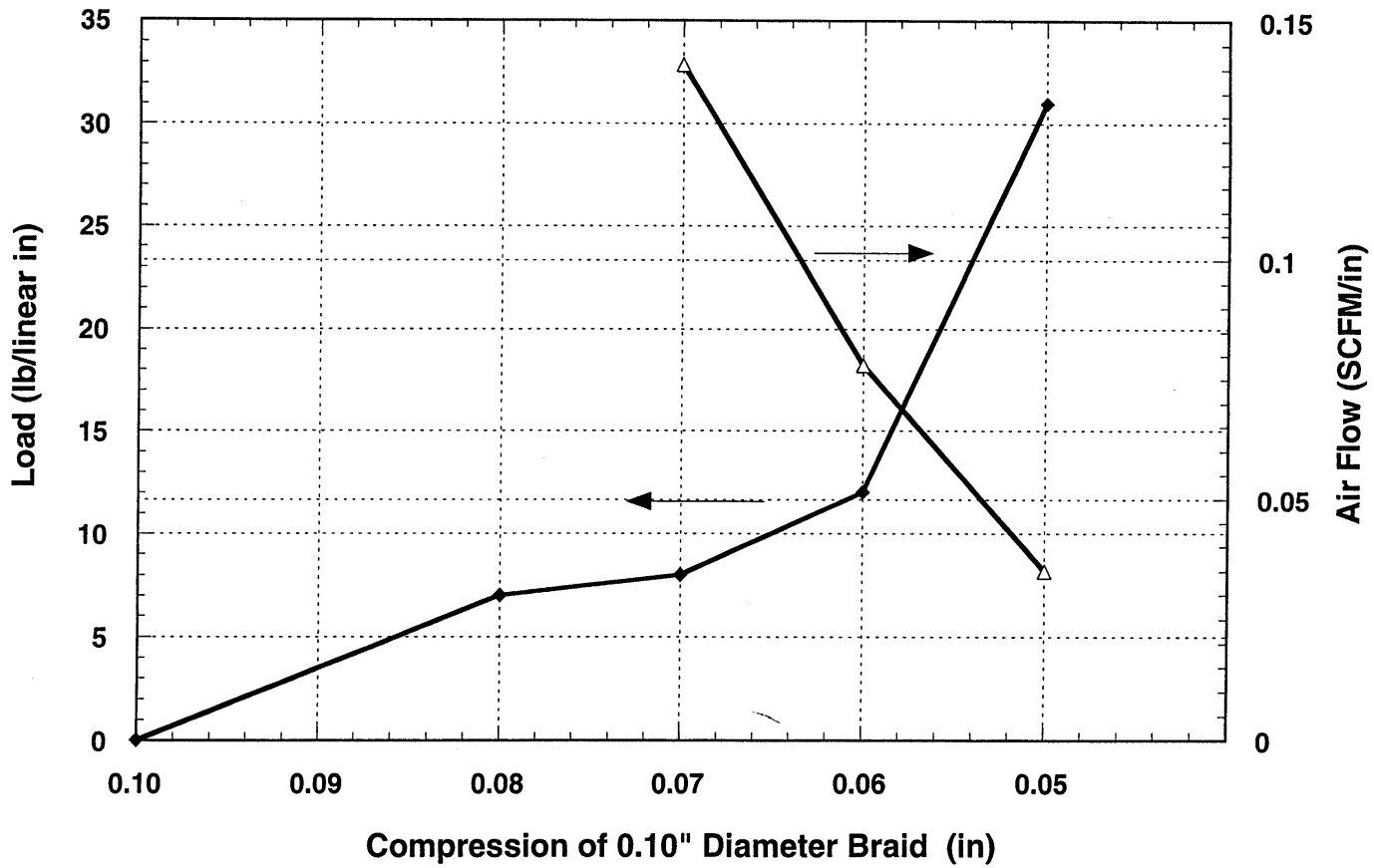

Load and Flow Data as a Function of Compression for Filled Core Nextel Rope Seal No. 10 at 2 psi Gas Pressure

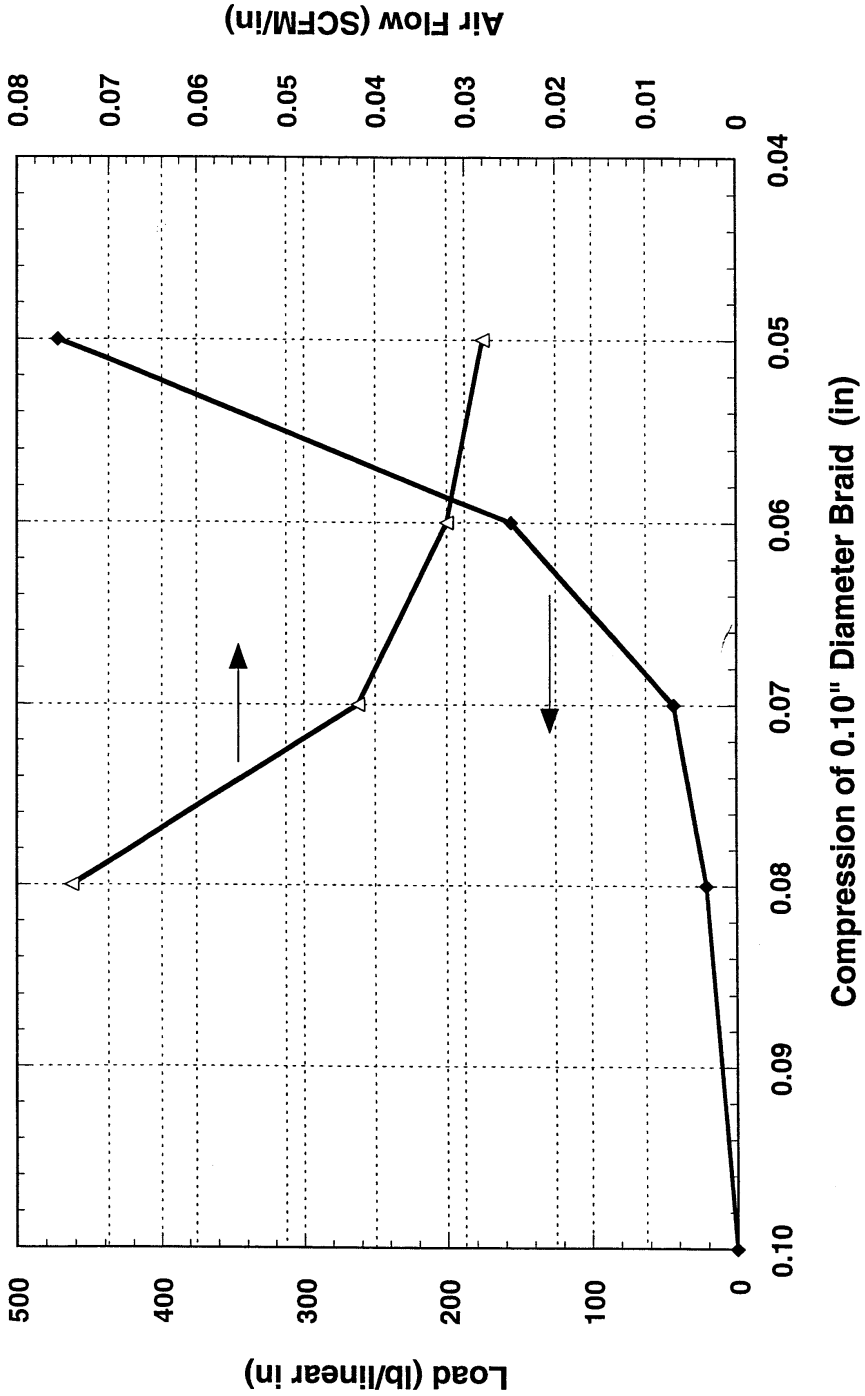

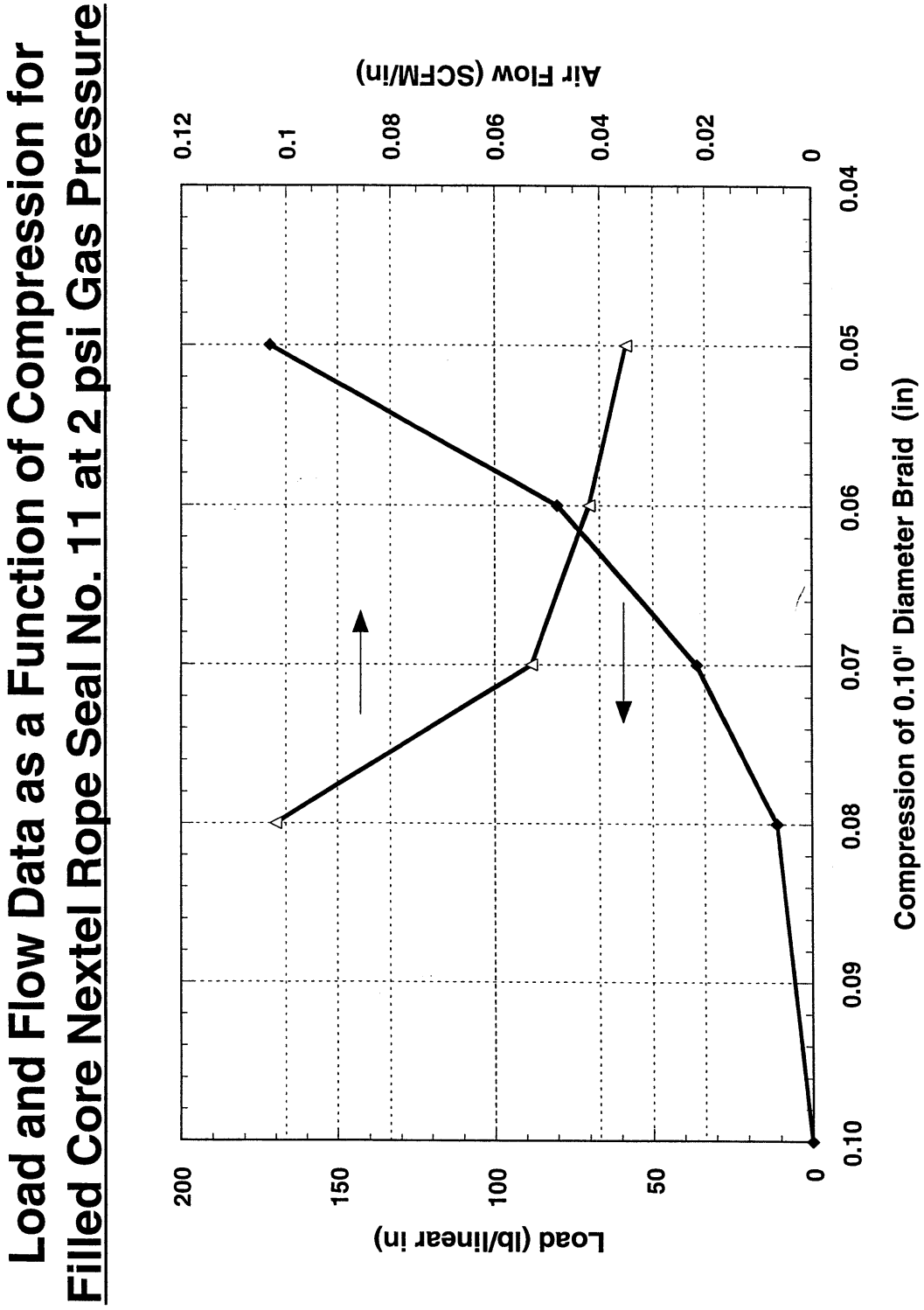
Load and Flow Data as a Function of Compression for Filled Core Nextel Rope Seal No. 11 at 2 psi Gas Pressure
Load (lb/linear in)
200
150
100
50
0
Air Flow (SCFM/in)
0.12
0.1
0.08
0.06
0.04
0.02
0
0.10
0.09
0.08
0.07
0.06
0.05
0.04
Compression of 0.10" Diameter Braid (in)

Leakage Rate as a Function of Gas Pressure and % Compression for Hollow Core Nextel Rope Seal No. 9

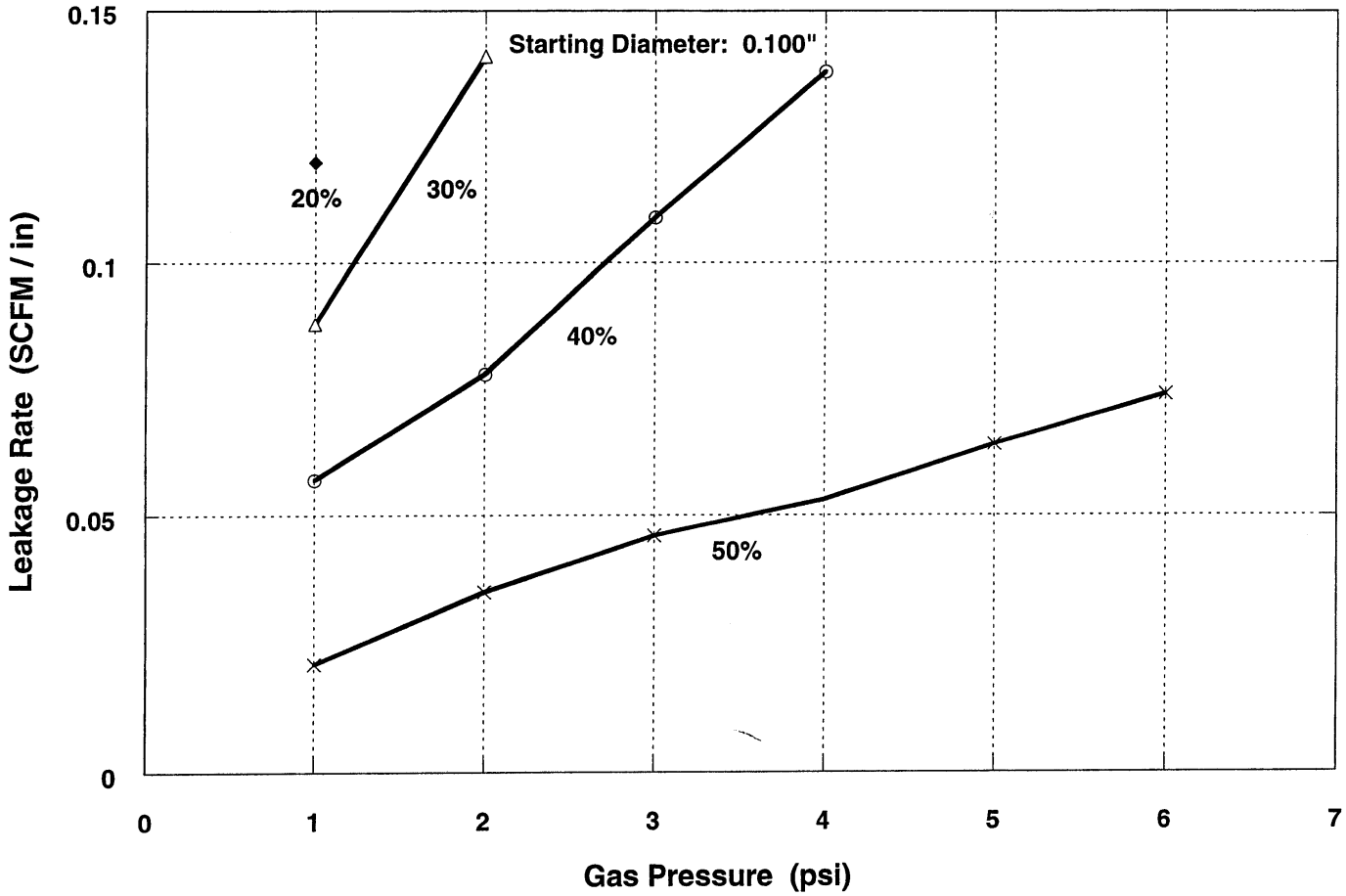

Leakage Rate as a Function of Gas Pressure and % Compression for Filled Core Nextel Rope Seal No. 10

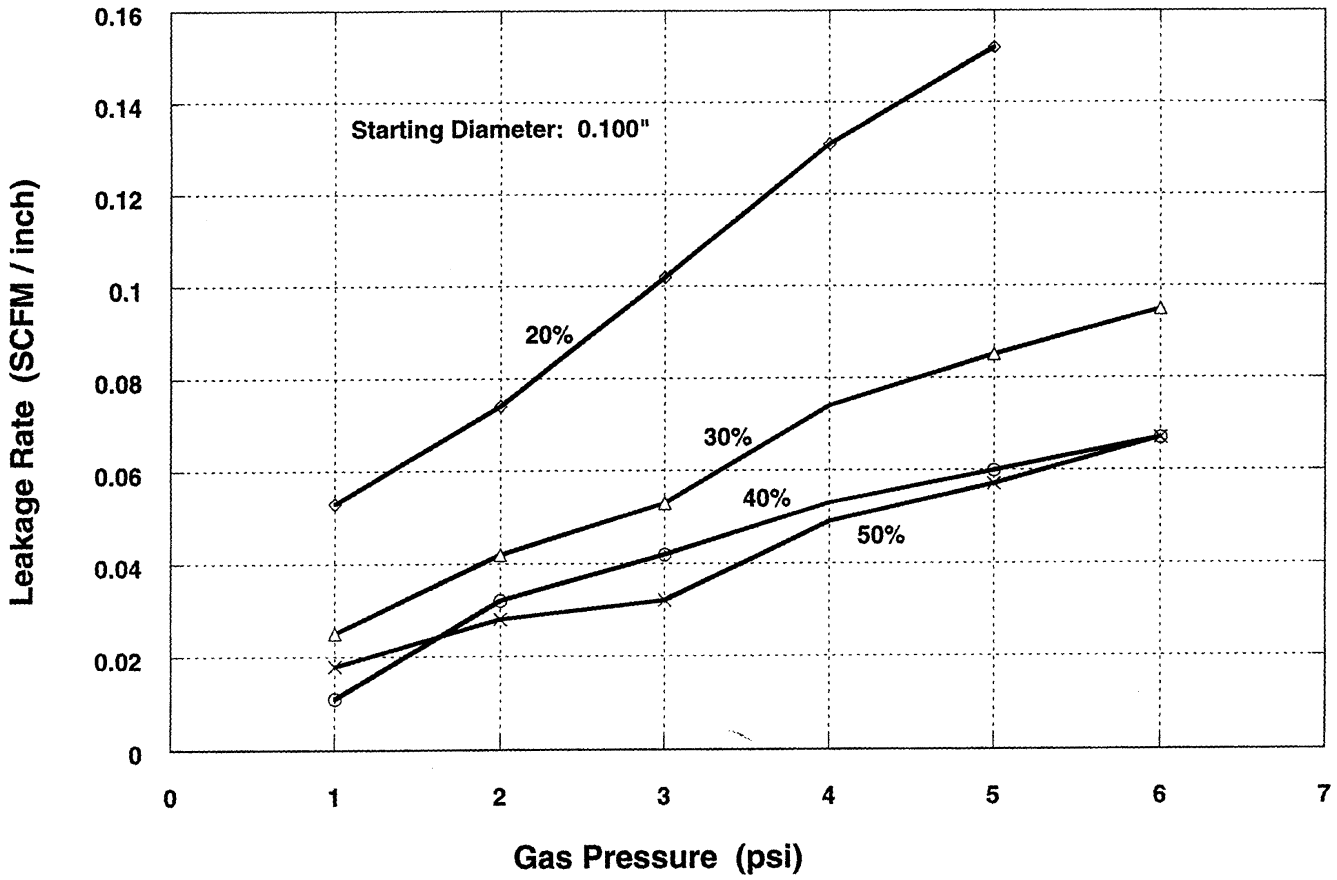

Leakage Rate as a Function of Gas Pressure and % Compression for Filled Core Nextel Rope Seal No. 11

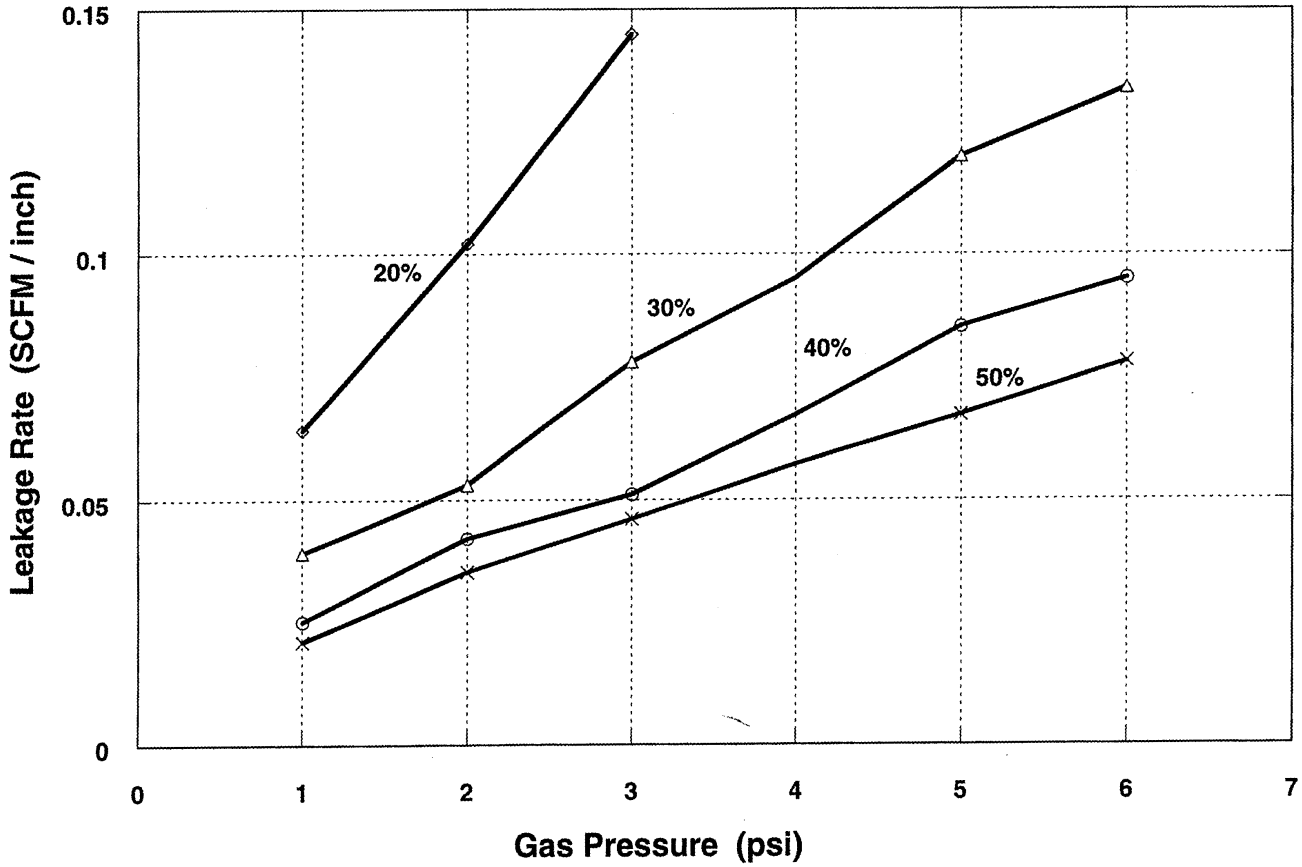

Summary

- Seal requirements defined by P&W and FTS
- Triangular braid composed of Nextel 720 woven for the lean zone outer liner seals on sector rig
- 12 variations of rope seals woven (Nextel 550 and 720); compression and flow tests performed on these braids; 4 selected for sector rig
- Highly compressible Nextel rope seal developed by Techniweave; only 31 lb./linear in. required to compress 50%
- Longitudinal metal wires successfully braided into rope seals by Techniweave and seals successfully brazed to Inconel panel by P&W

HSCT EXHAUST SYSTEM ANTICIPATED SEAL NEEDS

Larry Vacek
General Electric
Cincinnati, Ohio

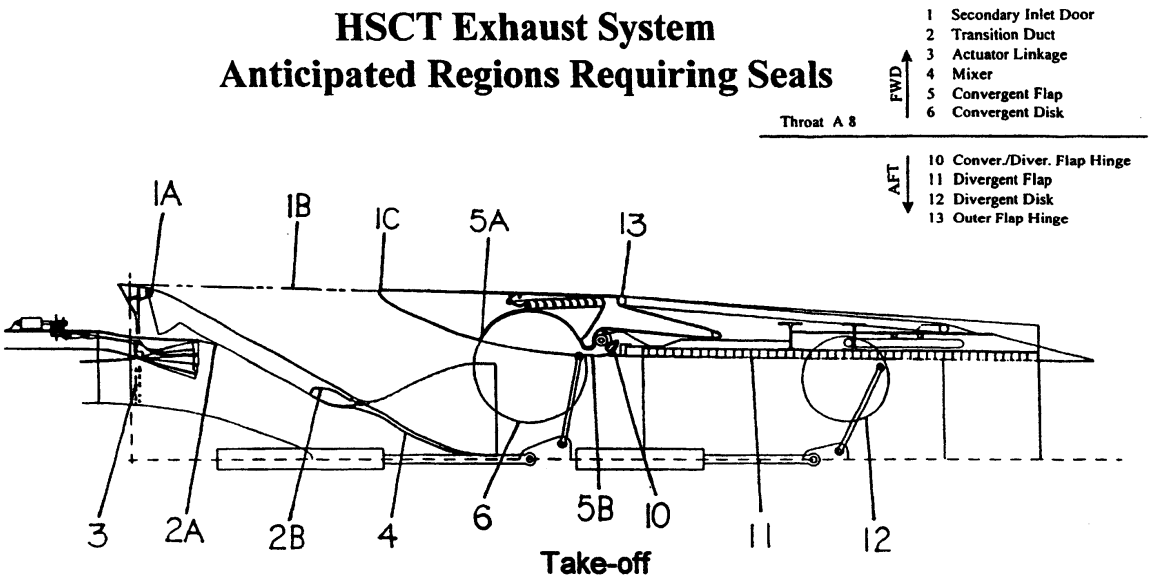

HSCT

HIGH SPEED CIVIL TRANSPORT

Chart 1 shows the HSCT Exhaust Nozzle in the Take Off or the Suppressed Position. In this position the Secondary Inlet Doors are open to allow secondary air to be entrained into the nozzle for cooling and noise suppression. The key sealing areas in this position are the Secondary Inlet Doors (against the Transition Duct Region 2A and the Tie Beam Region 2B) and the Convergent Flaps (against the Mid Frame Structure Region 5A and the Sidewall Acoustic Liners Region 5B).

jan/Udrv/vacek_15.ppt

HSCT

HIGH SPEED CIVIL TRANSPORT CHART 2

HSCT Exhaust System
Anticipated Regions Requiring Seals

1 Secondary Inlet Door
2 Transition Duct
3 Actuator Linkage
4 Mixer
5 Convergent Flap
6 Convergent Disk

FWD

Throat A 8

AFT

10 Conver./Diver. Flap Hinge
11 Divergent Flap
12 Divergent Disk
13 Outer Flap Hinge

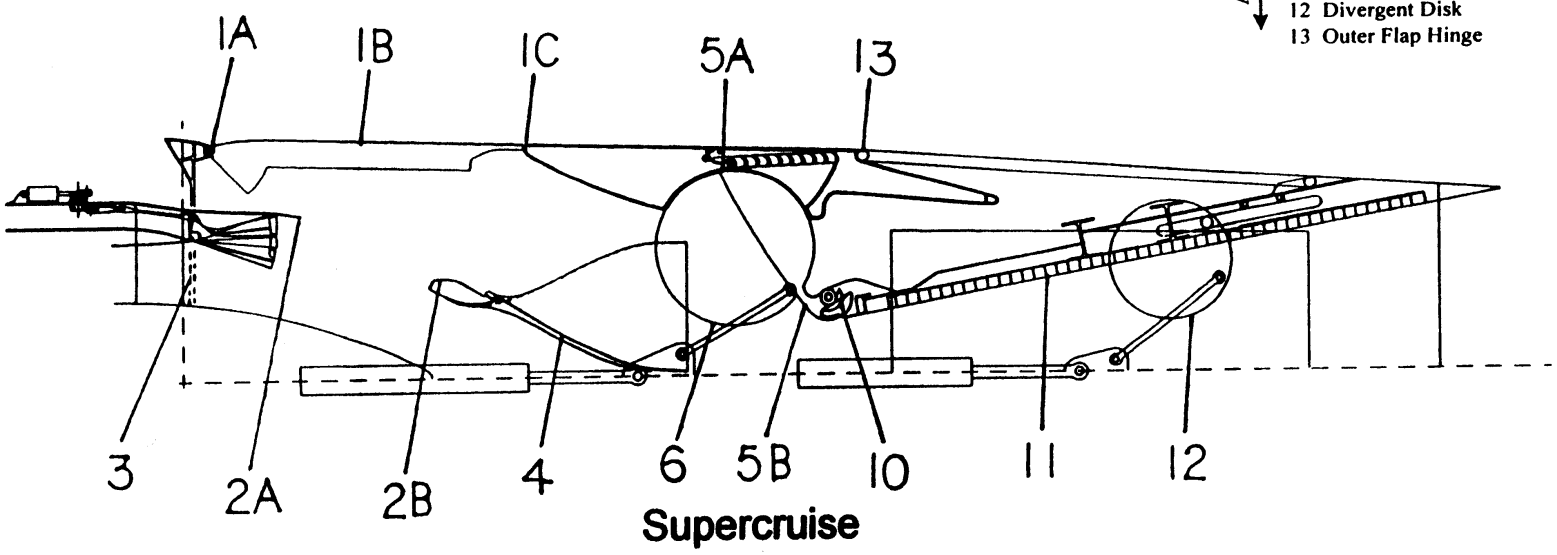

jan/Udrv/vacek_1.ppt

Chart 2 shows the HSCT Exhaust Nozzle in the Supercruise Position. In this position the Secondary Inlet Doors are closed allowing no secondary air into the nozzle. The key sealing areas in this position are the Secondary Inlet Doors (against the Nozzle Outer Structure Regions 1A & 1B and Mid Frame Structure Region 1C) and the Convergent Flaps (against the Mid Frame Structure Region 5A and the Sidewall Acoustic Liners Region 5B).

HSCT

HIGH SPEED CIVIL TRANSPORT CHART 3

HSCT Exhaust System
Anticipated Regions Requiring Seals

1 Secondary Inlet Door
2 Transition Duct
3 Actuator Linkage
4 Mixer
5 Convergent Flap
6 Convergent Disk

FWD

Throat A 8

AFT

10 Conver./Diver. Flap Hinge
11 Divergent Flap
12 Divergent Disk
13 Outer Flap Hinge

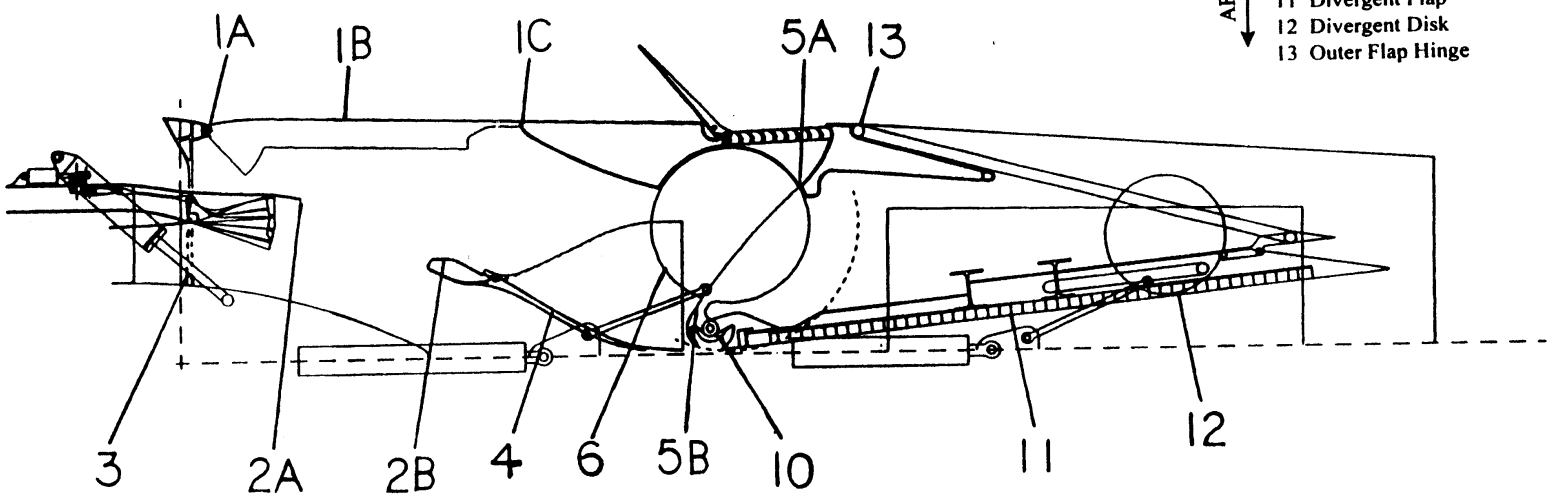

REVERSE

jan/Udrv/vacek_1.ppt

HSCT

HIGH SPEED CIVIL TRANSPORT

Chart 3 shows the HSCT Exhaust Nozzle in the Reverse Position. In this position the Secondary Inlet Doors are closed and the Convergent Flaps closes off the main core stream directing the flow out the Reverser Cascades. The key sealing in this position is the Convergent Flaps (against the Mid Frame Structure Region 5A and the Sidewall Acoustic Liners Region 5B).

HSCT

HIGH SPEED CIVIL TRANSPORT CHART 4

HSCT Exhaust System Seal Region Descriptions

Region	Priority: Performance	Priority: Safety	Interface Description	Possible Seal Types	Temperature	Pressure ΔP	Amount of Seal Motion-Max	Seal Length	Number of Corners
1A	A	C	Secondary Inlet Door/Hinge Interface	E - Seal or Fixed Leaf Seal	850 °F	35 Psi	.10"	71"	4Per Door/8Total
1B	A	C	Secondary Inlet Door/Sidewall Interface	E-Seal, Fixed Leaf or Braided Ceramic Rope Seal	850 °F	35 Psi	.25"	50"	
1C	A	C	Secondary Inlet Door/Midframe Interface	E-Seal, Fixed Leaf or Braided Ceramic Rope Seal	850 °F	35 Psi	.25"	71"	
2A	B	B	Secondary Inlet Door/Transition Duct Edge Interface- (Suppressed)	Fixed Leaf Seal or Braided Ceramic Rope Seal	1000 °F	35 Psi	.40"	104"	2 Per Door/4 Total
2B	A	C	Secondary Inlet Door/Mixer Tie Beam Interface	Fixed Leaf Seal or Braided Ceramic Rope Seal	1200 °F	30 Psi	.25"	71"	

eg. Seal Compression

HSCT

HIGH SPEED CIVIL TRANSPORT CHART 5

HSCT Exhaust System Seal Region Descriptions

Region	Priority: Performance	Priority: Safety	Interface Description	Possible Seal Types	Temperature	Pressure ΔP	Amount of Seal Motion-Max	Seal Length	Number of Corners
3	B	B	Bulk Head/Secondary Inlet Door Actuator Linkage Interface	Metal Bellows or Viton Boot Seal	850 °F	35 Psi	.10"	3"	0
4	B	C	Mixer/Acoustic Sidewall Interface	Fixed or Floating Fishmouth Seal	1200 °F	30 Psi	.50"	36.6"	1 Per Mixer Side Wall/ 4 Total
5A	A	B	Conv. Flap/ Midframe Interface	Plunger Seal or Hinged Leaf Seal	1200 °F	30 Psi	.50"	71"	2 Per Conv. Flap/4 Total
5B	B	B	Conv. Flap/Acoustic Sidewall Interface	Hinged Leaf or Plunger Seal	1200 °F	30 Psi	.50"	3.5"	2 Per Conv. Flap Side/8 Total
6	A	A	Conv. Disk/ Sidewall Interface	C-Seal, Piston Ring or Brush Seal	1200 °F	30 Psi	.050"	85"	2 Per Conv. Flap Side/8 Total
10	A	B	Conv. Flap/Diver. Flap Hinge Interface	Fixed Leaf Seal	1200 °F	12 Psi	.050"	71"	2 Per Conv./Diver. Flap/4 Total

HSCT Exhaust System Seal Region Descriptions

Region	Priority: Performance	Priority: Safety	Interface Description	Possible Seal Types	Temperature	Pressure ΔP	Amount of Seal Motion-Max	Seal Length	Number of Corners
11	B	B	Diver. Flap/Acoustic Sidewall Interface	Hinged Leaf or Plunger Seal	1200 °F	12 Psi	.50"	116.6"	2 Per Diver. Flap/4 Total
12	B	A	Diver. Disk/Sidewall Interface	C-Seal, Piston Ring or Brush Seal	1200 °F	12 Psi	.050"	65"	0
13	C	C	Outer Flap Hinge/Midframe Interface	Fixed Leaf Seal	850 °F	2 Psi	.10"	71"	2 Per Outer Flap/4 Total

HSCT

HIGH SPEED CIVIL TRANSPORT

Charts 4, 5 & 6 describes the various HSCT Exhaust Nozzle sealing interfaces. The possible seal types are given for the different regions of the nozzle. The environmental conditions are given as to temperature, pressure, and amount of seal motion required. Priority is given on the amount of leakage, and how it affects performance and safety. An "A" priority would have a significant affect on performance or safety, and "C" would have a minimal affect.

HSCT

HIGH SPEED CIVIL TRANSPORT CHART 7

For Region 1A :

- E - Seal

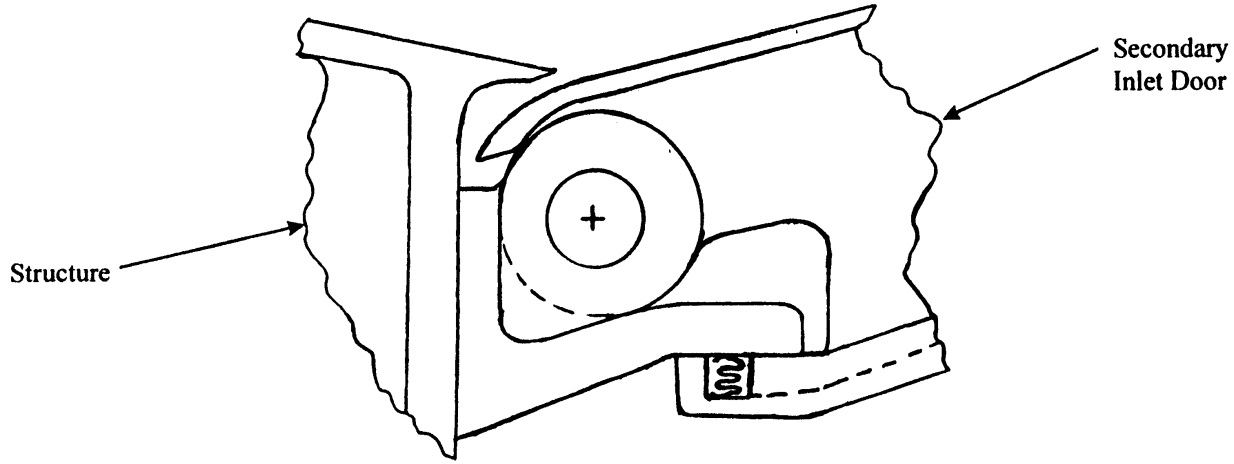

- Seal Material: Inconel X-750
- Door Material: TiAl & Inconel 718
- Requires Ultra-High Flex E-Seal (Very Conformable)
- Access to Seal Difficult with Door Installed

- Installing Door Difficult
- In Secondary Flow Stream when in Suppressed Position
- Preferred Design

jan/Udrv/vacek_11.ppt

HSCT

HIGH SPEED CIVIL TRANSPORT CHART 8

For Regions 1A & 13:

- Fixed Leaf Seal

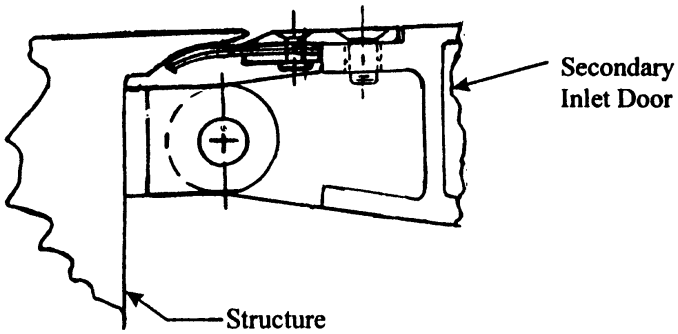

- Seal Material: Inconel X-750
- Structure Material: Ti 6242/Adv. Ti
- Seal Removable with Door Installed
- Gives Access to Door Hinge Lugs
- Preferred Design for Region 13

- Fixed Leaf Seal

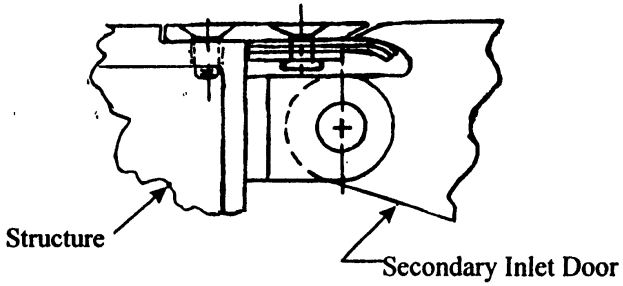

- Seal Material: Inconel X-750
- Door Material: TiAl & Inconel 718
- Seal Removable from Support with Door Installed
- Gives Access to Door Hinge Lugs

HSCT

HIGH SPEED CIVIL TRANSPORT

Charts 7 & 8 shows the cross sections of the hinge Region 1A between the Secondary Inlet Door and the Nozzle Structure. A similar hinge joint occurs between the Aft Outer Flap and the Mid Frame Structure Region 13. The seals are shown removable for easy replacement if damaged, and easy installation of the large Secondary Inlet Door except if the E-seal Configuration is selected along the Secondary Inlet Door hinge line.

HSCT

HIGH SPEED CIVIL TRANSPORT CHART 9

For Region 1B:

- E - Seal

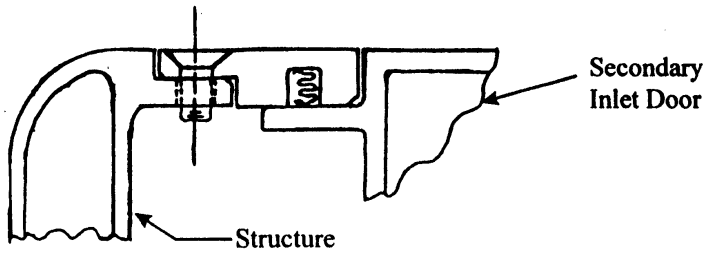

- Seal Material: Inconel X-750
- Door Material: TiAl & Inconel 718
- Requires Ultra-High Flex E-Seal (Very Conformable)
- Seal Removable with Door Installed
- Not in Secondary Flow Stream when in Suppressed Position
- Preferred Design

- E - Seal

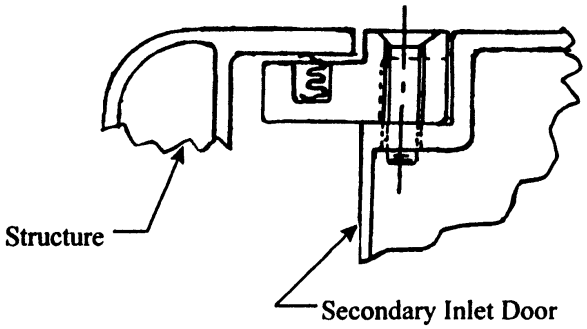

- Seal Material: Inconel X-750
- Structure Material: Ti 6242/Adv. Ti
- Requires Ultra-High Flex E-Seal (Very Conformable)
- Seal Removable with Door Installed
- In Secondary Flow Stream when in Suppressed Position

jan/Udrv/vacek_4.ppt

HSCT

HIGH SPEED CIVIL TRANSPORT CHART 10

For Region 1B:

- Fixed Leaf Seal

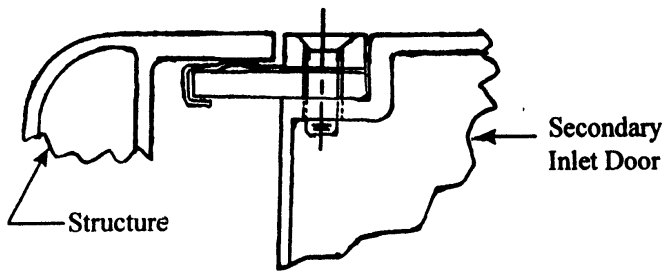

- Seal Material: Inconel X-750
- Structure Material: Ti 6242/Adv. Ti
- Seal Removable with Door Installed
- In Secondary Flow Stream When in Suppressed Position
- Less Conforming Seal

- Braided Ceramic Rope Seal

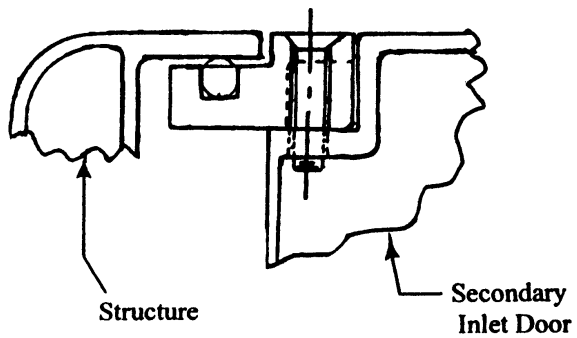

- Seal Material: Ceramic & Haynes 188 Sheath
- Structure Material: Ti 6242/Adv. Ti
- Seal Removable With Door Installed
- Reduced Flexibility
- In Secondary Flow Stream when in Suppressed Position

jan/Udrv/vacek_5.ppt

HSCT

HIGH SPEED CIVIL TRANSPORT

Charts 9 & 10 shows the cross sections of the interface between the Secondary Inlet Door Region 1B and the Nozzle Sidewall Structure. The Seals are shown removable for easy replacement if damaged, and easy installation of the large Secondary Inlet Door.

HSCT

HIGH SPEED CIVIL TRANSPORT

CHART 11

For Region 1C:

- Fixed Leaf Seal
- E - Seal
- Braided Ceramic Rope Seal

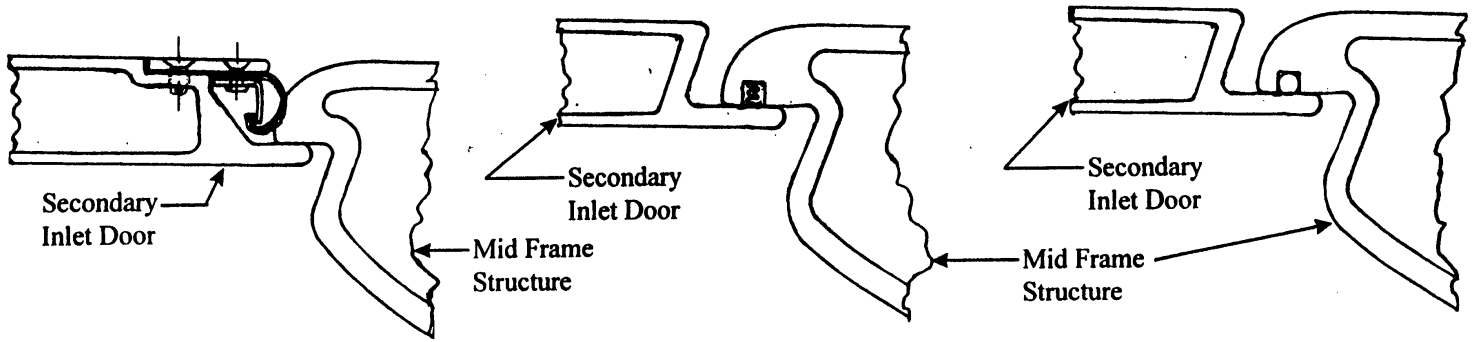

- Seal Material: Inconel X-750
- Structure Material: Ti 6242/Adv. Ti
- Seal Removable with Door Installed
- Less Conforming Seal
- Requires Less Overlap with Mid-Frame Structure
- Aero Concerns due to Notch in Mid-Frame Nose

- Seal Material: Inconel X-750
- Door Material: TiAl & Inconel 718
- Seal less Accessible for seal removal
- Requires Large Overlap with Mid-Frame Structure
- Aero Concerns Due to Notch in Mid-Frame Nose
- Seal Very Conformable
- Preferred Design

- Seal Material: Ceramic & Haynes 188 Sheath
- Door Material: TiAl & Inconel 718
- Seal Less Accessible for Seal Removal
- Requires Large Overlap with Mid-Frame Structure
- Aero Concerns Due to Notch in Mid-Frame Nose
- Reduced Flexibility

jan/Udrv/vacek_6.ppt

HSCT

HIGH SPEED CIVIL TRANSPORT

Chart 11 shows the cross sections of the interface between the Secondary Inlet Door Region 1C and the nose of the Mid Frame Structure. In order to get a good seal between the Secondary Inlet Door and the Mid Frame nose requires an overlap. This requires a notch in the nose of the Mid Frame Structure giving aerodynamic flow concerns, when the Secondary Inlet Door is open in the Suppressed or Take Off position.

HSCT

HIGH SPEED CIVIL TRANSPORT CHART 12

For Region 2A:

- Braided Ceramic Rope Seal

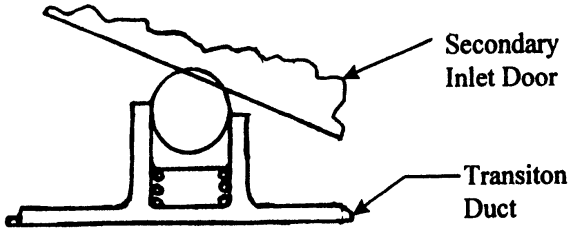

- Seal Material: Braided Ceramic and Haynes 188 Sheath
- Door Material: Ti 6242/Adv. Ti & Inconel 718
- Spring Loaded for large Seal Motion
- Preferred Design

- Fixed Leaf Seal

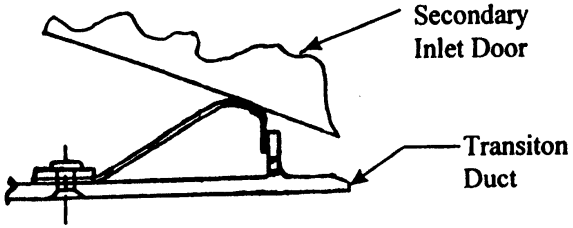

- Seal Material: Inconel X-750
- Door Material: Ti 6242/Adv. Ti & Inconel 718

jan/Udrv/vacek_9.ppt

HSCT

HIGH SPEED CIVIL TRANSPORT

Chart 12 shows the cross sections of the interface between the Secondary Inlet Door Region 2A and the Transition Duct in the Suppressed or Take Off position. The Seals are shown on the outside of the Transition Duct for easy replacement if damaged.

HSCT

HIGH SPEED CIVIL TRANSPORT CHART 13

For Region 2B:

- Braided Ceramic Rope Seam

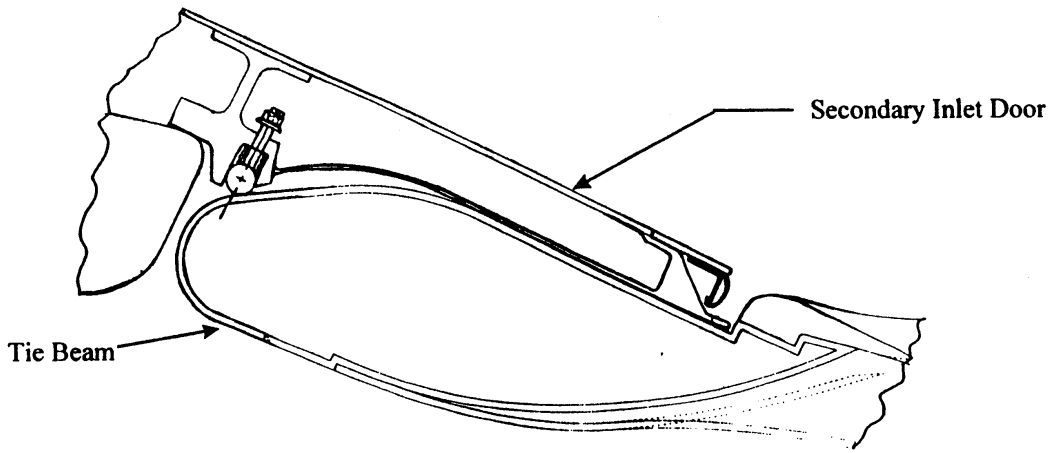

- Seal Material: Braided Ceramic and Haynes 188 Sheath
- Tie Beam Material: R108
- Spring Loaded for Large Seal Motion
- Preferred Design

jan/Udrv/vacek_13.ppt

HSCT

HIGH SPEED CIVIL TRANSPORT CHART 14

For Region 2B:

- Fixed Leaf Seal

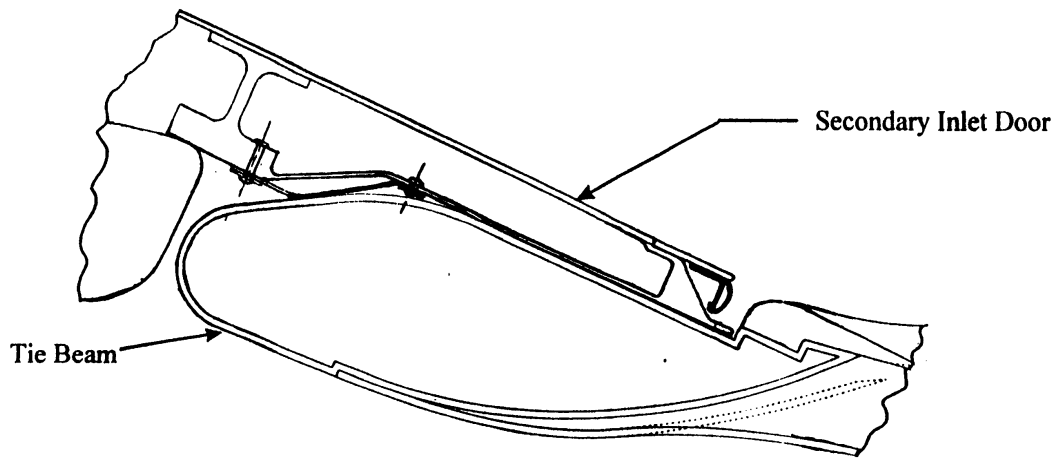

- Seal Material: Inconel X-750
- Tie Beam Material: R108
- Less Seal Motion Capability

HSCT

HIGH SPEED CIVIL TRANSPORT

Charts 13 & 14 shows the cross sections of the interface between the Secondary Inlet Door Region 2B and the Tie Beam in the Suppressed or Take Off position. The Seals are shown on the inside of the Secondary Inlet Door. Door must be removed from assembly to replace seal.

HSCT

HIGH SPEED CIVIL TRANSPORT CHART 15

For Region 4:

- Floating Fishmouth Seal

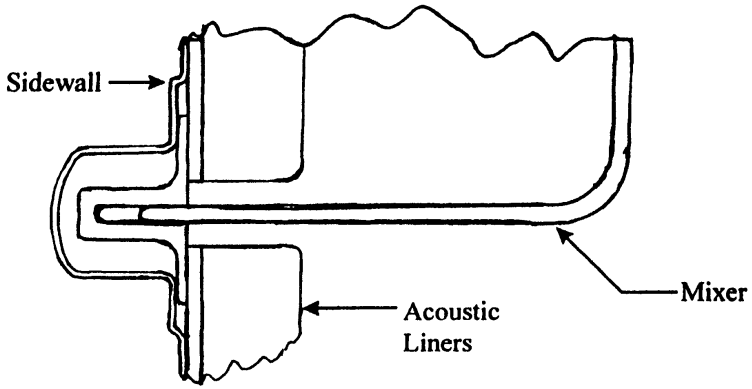

- Fixed Fishmouth Seal

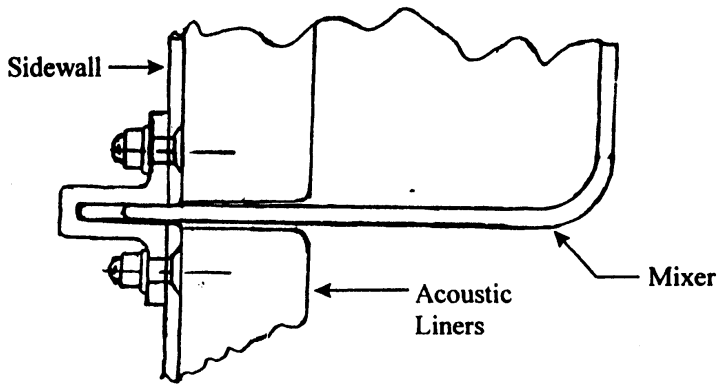

- Fishmouth Material: Inconel 718
- Mixer Material: R108
- Allows Thermal Freedom in all Directions
- Preferred Design

- Fishmough Material: Inconel 718
- Mixer Material: R108
- Allows Less Thermal Freedom

jan/Udrv/vacek_10.ppt

HSCT

HIGH SPEED CIVIL TRANSPORT

Chart 15 shows the cross sections of the interface between the Mixer Chute Region 4 and the Sidewall Acoustic Liners. The Fishmouth Seal could be interrogated with the Acoustic Liners or be behind the liners.

HSCT

HIGH SPEED CIVIL TRANSPORT

CHART 16

For Region 5A:

- Plunger Seal

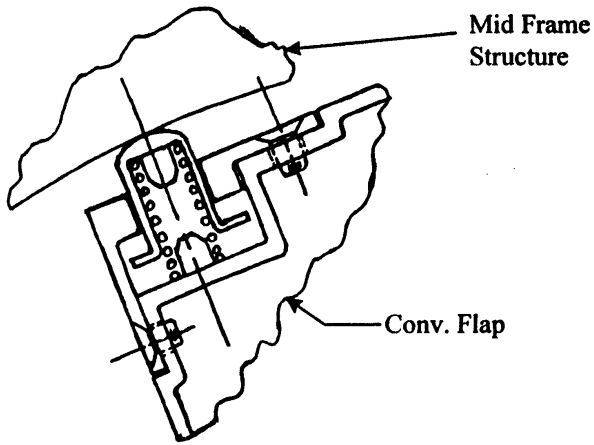

- Seal Material: Inconel 718, Spring-Inconel X-750
- Structure Material: Ti 6242/Adv. Ti
- Requires Minimal Envelope
- Preferred Design

- Hinged Leaf Seal

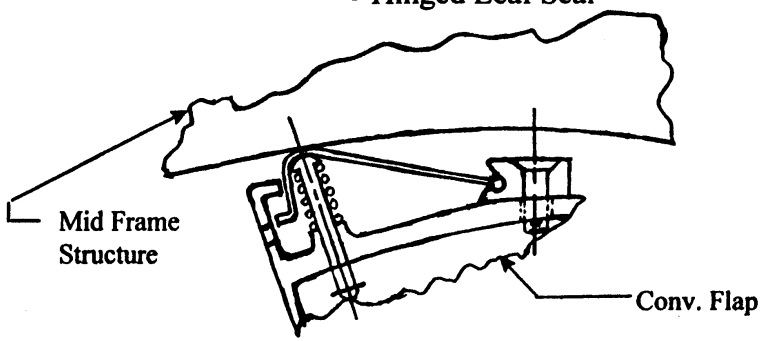

- Seal Material: Inconel 718, Spring-Inconel X-750
- Structure Material: Ti 6242/Adv. Ti
- Requires large envelope

jan/Udrv/vacek_15.ppt

HSCT

HIGH SPEED CIVIL TRANSPORT

Chart 16 shows the cross sections of the interface between the Convergent flap Region 5A and the Mid Frame Structure. The seal is on the leading edge of the Convergent Flap, and must be as close as possible to the flow path surface due to the limited space for sealing on the Mid Frame Structure.

HSCT

HIGH SPEED CIVIL TRANSPORT CHART 17

For Regions 5B & 11:

- Hinged Leaf Seal

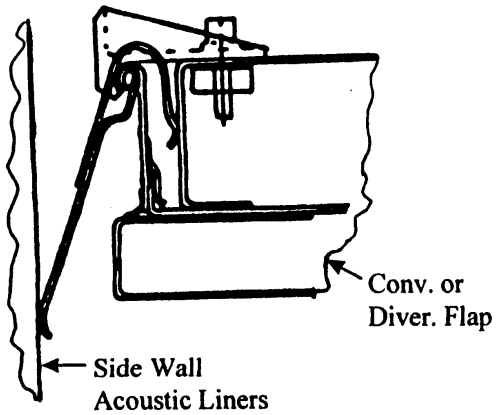

- Seal Material: Inconel X-718
- Conv. Flap Material: Inconel 718
- Diver. Flap Material: TiAl
- Single Sealing Contact
- Simple Design
- Preferred Design

- Hinged Leaf Seal

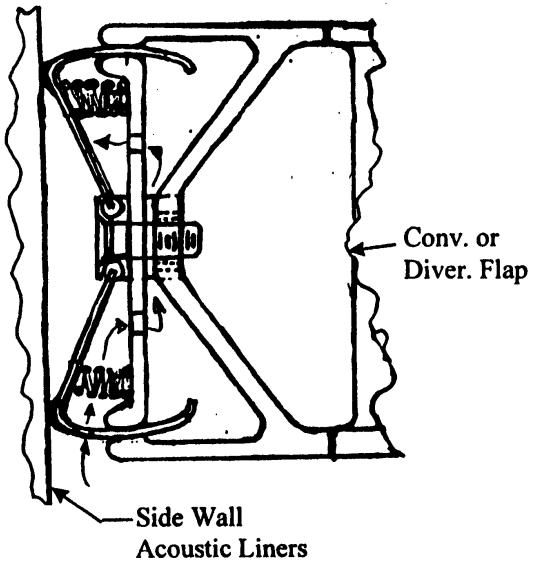

- Seal Material: Inconel X-718
- Conv. Flap Material: Inconel 718
- Diver. Flap Material: TiAl
- Double Sealing Contact an Advantage with the Acoustic Holes in Sidwall

- Plunger Seal

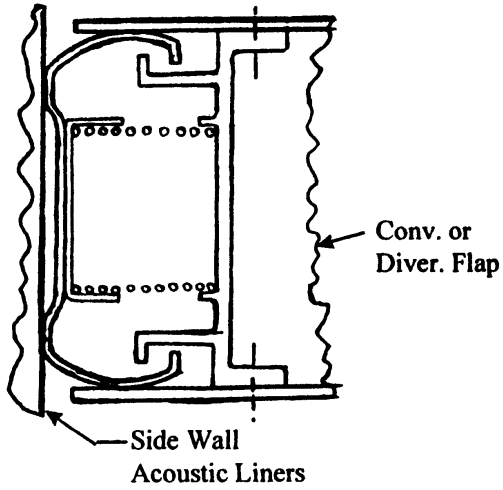

- Seal Material: Inconel 718
- Conv. Flap Material: Inconel 718
- Diver. Flap Material: TiAl
- Double Sealing Contact an Advantage with the Acoustic Holes in Sidewall

jan/Udrv/vacek_7.ppt

HSCT

HIGH SPEED CIVIL TRANSPORT

Charts 17 shows the cross sections of the interface between the Convergent Flap Region 5B or the Divergent Flap Region 11 and the Sidewall Acoustic Liners. A wide Plunger seal maybe required to discourage flow past the seal through the holes in the surface of the Acousic Liners.

HSCT

HIGH SPEED CIVIL TRANSPORT CHART 18

For Regions 6 & 12:

- Piston Ring Seal

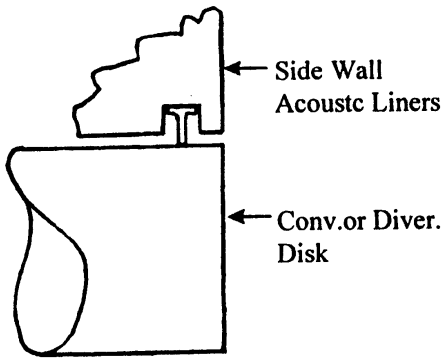

- Seal Material: Inconel X-718
- Sidewall: TiAl
- Preferred Design

- Brush Seal

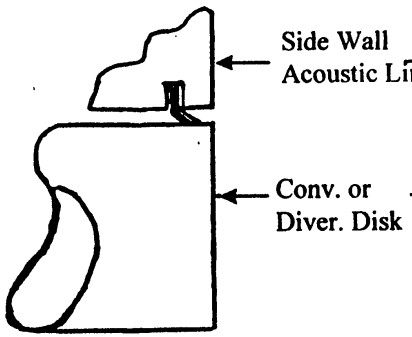

- Seal Material: Inconel X-718 or Waspaloy Bristles
- Sidewall: TiAl
  Rotation in Two Directions May
- Fatigue Bristles

- C - Seal

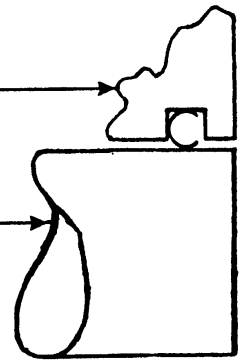

- Seal Material: Inconel X-750
- Sidewall: TiAl
- Overlap at Split Difficult to Produce

jan/Udrv/vacek_8.ppt

HSCT

HIGH SPEED CIVIL TRANSPORT

Chart 18 shows the cross sections of the interface between the Convergent Flap Disk Region 6 or the Divergent Flap Disk Region 12 and the Sidewall Acoustic Liners. The seal needs to be as close as possible to the outside surface of the Acoustic Liners to minimize the leakage past the outside ends of the Convergent and Divergent Flaps.

HSCT

HIGH SPEED CIVIL TRANSPORT CHART 19

For Region 10:

- Fixed Leaf Seal

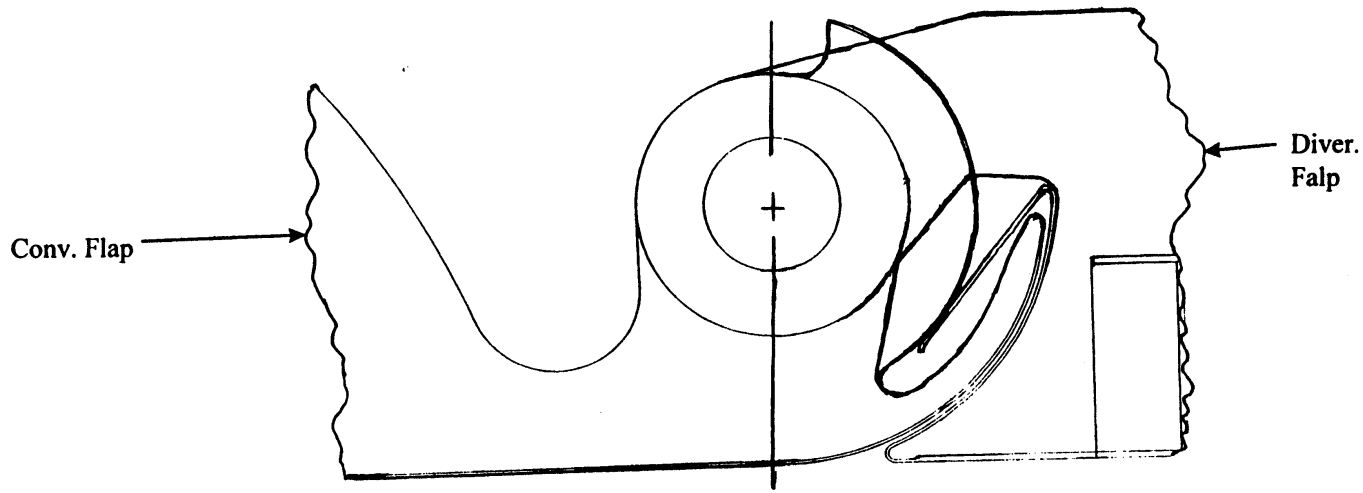

- Seal Material: Inconel X-750
- Conv. Flap Material: Inconel 718
- Diver. Flap Material: TiAl

jan/Udrv/vacek_12.ppt

HSCT

HIGH SPEED CIVIL TRANSPORT

Chart 19 shows the cross sections of the interface between the Convergent Flap Hinge Region 10 and the Divergent Flap. An outside radius of 4.0" is required per Aero for the Convergent Flap hinge (Throat A_8). The seal is shown on a smaller radius to minimize the space required for the seal allowing more area for the Acoustic Liners on the Divergent Flap.

REPORT DOCUMENTATION PAGE

Form Approved
OMB No. 0704-0188

Public reporting burden for this collection of information is estimated to average 1 hour per response, including the time for reviewing instructions, searching existing data sources, gathering and maintaining the data needed, and completing and reviewing the collection of information. Send comments regarding this burden estimate or any other aspect of this collection of information, including suggestions for reducing this burden, to Washington Headquarters Services, Directorate for Information Operations and Reports, 1215 Jefferson Davis Highway, Suite 1204, Arlington, VA 22202-4302, and to the Office of Management and Budget, Paperwork Reduction Project (0704-0188), Washington, DC 20503.

1. AGENCY USE ONLY (*Leave blank*)

2. REPORT DATE
May 2006

3. REPORT TYPE AND DATES COVERED
Conference Publication

4. TITLE AND SUBTITLE
Seals/Secondary Fluid Flows Workshop 1997
HSR Engine Special Session

5. FUNDING NUMBERS
WBS–22–714–09–46

6. AUTHOR(S)
Robert C. Hendricks, editor

7. PERFORMING ORGANIZATION NAME(S) AND ADDRESS(ES)
National Aeronautics and Space Administration
John H. Glenn Research Center at Lewis Field
Cleveland, Ohio 44135–3191

8. PERFORMING ORGANIZATION REPORT NUMBER
E–15561–2

9. SPONSORING/MONITORING AGENCY NAME(S) AND ADDRESS(ES)
National Aeronautics and Space Administration
Washington, DC 20546–0001

10. SPONSORING/MONITORING AGENCY REPORT NUMBER
NASA CP—2006-214329–VOL2

11. SUPPLEMENTARY NOTES
This printing with corrected title replaces copies previously received. Proceedings of the Seals/Secondary Fluid Flows Workshop 1997, HSR Engine Special Session, sponsored by Glenn Research Center, Cleveland, Ohio, October 15–16, 1997. Responsible person, Robert C. Hendricks, organization code R, 216–977–7507.

12a. DISTRIBUTION/AVAILABILITY STATEMENT
Unclassified - Unlimited
Subject Categories: 07 and 37
Available electronically at http://gltrs.grc.nasa.gov
This publication is available from the NASA Center for AeroSpace Information, 301–621–0390.

12b. DISTRIBUTION CODE

13. ABSTRACT ***(Maximum 200 words)***

The High Speed Civil Transport (HSCT) will be the largest engine ever built and operated at maximum conditions for long periods of time. It is being developed collaboratively with NASA, FAA, Boeing-McDonnell Douglas, Pratt & Whitney, and General Electric. This document provides an initial step toward defining high speed research (HSR) sealing needs. The overview for HSR seals includes defining objectives, summarizing sealing and material requirements, presenting relevant seal cross-sections, and identifying technology needs. Overview presentations are given for the inlet, turbomachinery, combustor and nozzle. The HSCT and HSR seal issues center on durability and efficiency of rotating equipment seals, structural seals and high speed bearing and sump seals. Tighter clearances, propulsion system size and thermal requirements challenge component designers.

14. SUBJECT TERMS
Seals; Supersonic; Engine; Inlet; Turbomachinery; Combustor; Nozzle

15. NUMBER OF PAGES
150

16. PRICE CODE

17. SECURITY CLASSIFICATION OF REPORT
Unclassified

18. SECURITY CLASSIFICATION OF THIS PAGE
Unclassified

19. SECURITY CLASSIFICATION OF ABSTRACT
Unclassified

20. LIMITATION OF ABSTRACT