https://ntrs.nasa.gov/search.jsp?R=20080003814 2018-07-24T18:51:29+00:00Z

EFFECTS OF COMPRESSION, STAGING, AND BRAID ANGLE ON BRAIDED ROPE SEAL PERFORMANCE

Bruce M. Steinetz
NASA Lewis Research Center .
Cleveland, Ohio

and

Patrick H. Dunlap, Jr. and Michael L. Adams
Modern Technologies Corp.
Middleburg Heights, Ohio

Background

- High temperature flexible packings have origins in several programs
  - Space Shuttle Thermal Protection System (TPS)
  - National Aerospace Plane (NASP) engine seals

Rope Seal Benefits

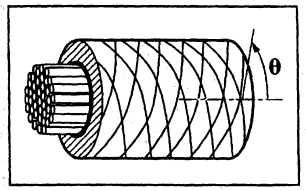

- High temperature operation (1500-2000+ °F)
  → 500-1000 °F hotter than graphite seals
- Low leakage
- Flexible: Seals & conforms to complex geometries
  → O-ring-like flexibility
- Resilient
- Allows relative thermal growth between primary/support structures
- Field joint capability
- Hybrid design resists abrasion

CD-97-75256

Test Fixture Schematics

Flow Fixture

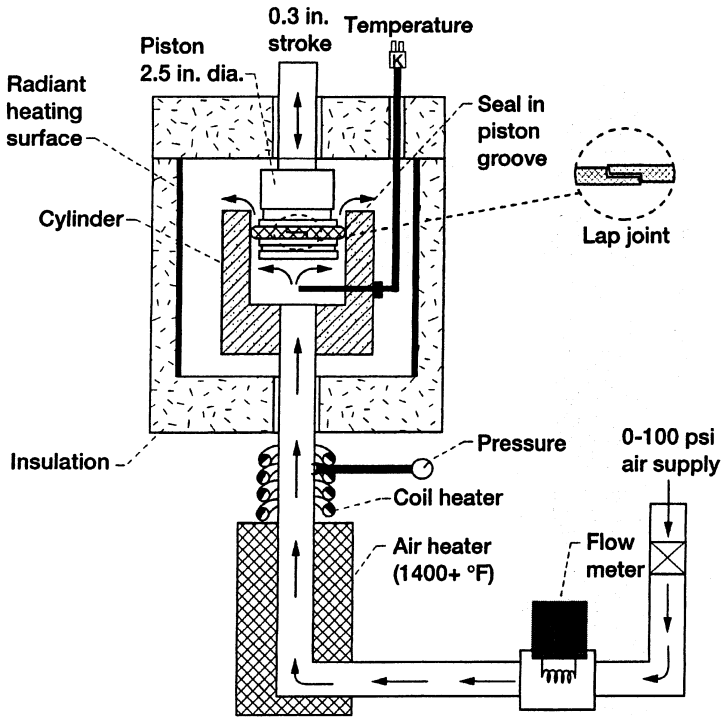

Compression Fixture

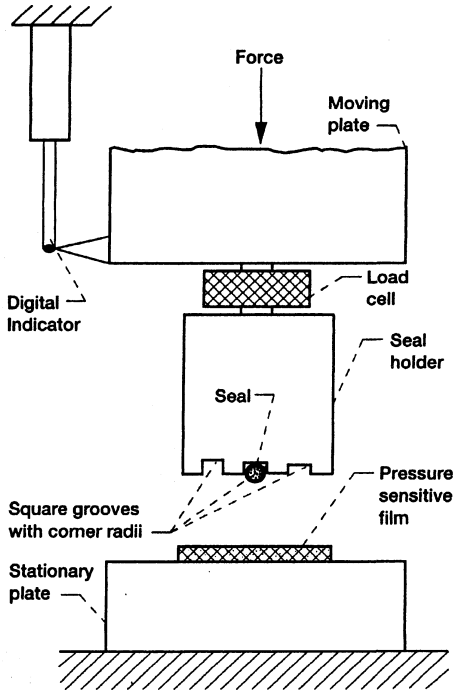

CD-97-75258

High Temperature (1500 °F)

Rope Seal Test Fixture

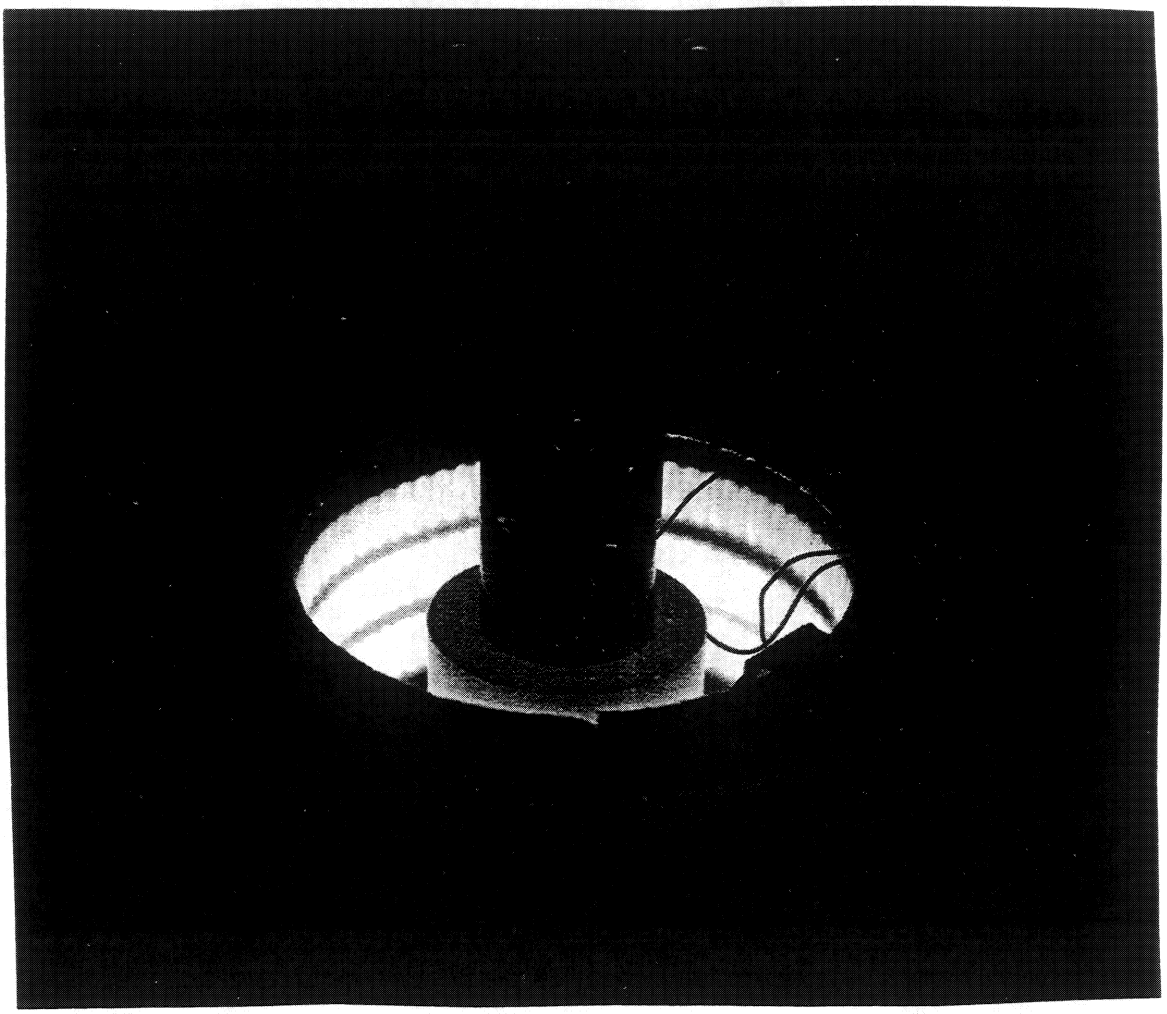

CD-96-73172

Comparison of Hybrid Seal Braid Architecture

46° Braid Angle Hybrid

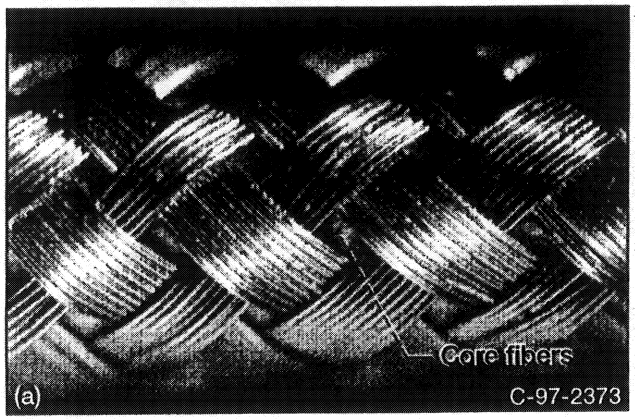

Core: Nextel 550
Sheath: Haynes 188
10 wires/bundle

58° Braid Angle Hybrid

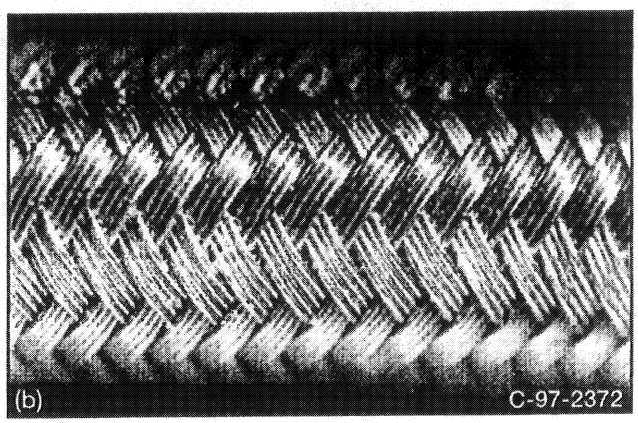

Core: Nextel 550
Sheath: Haynes 188
4 wires/bundle

CD-97-75266

Residual Interference After Compression Cycling

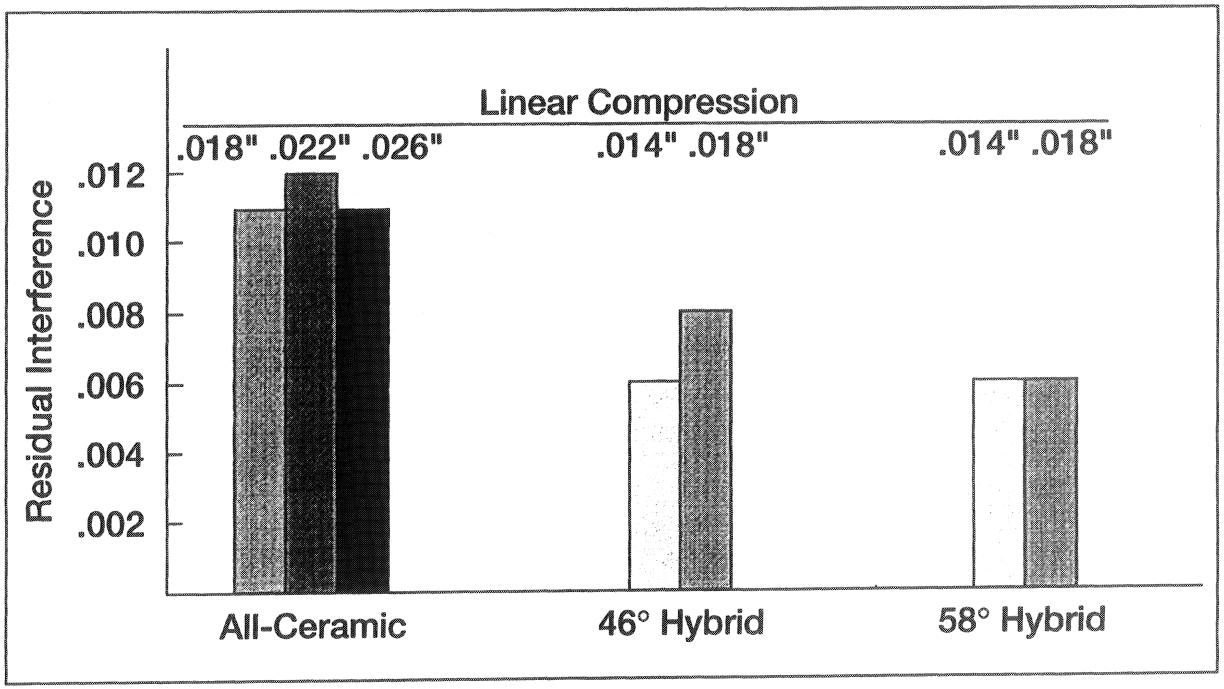

All ceramic seals exhibit more residual interference

CD-97-75265

Effect of Compression, Braid, and Staging on Seal Flow

(Δp = 10 psid; T = 1300 °F; After Scrubbing)

Hybrid Seals (1/16")

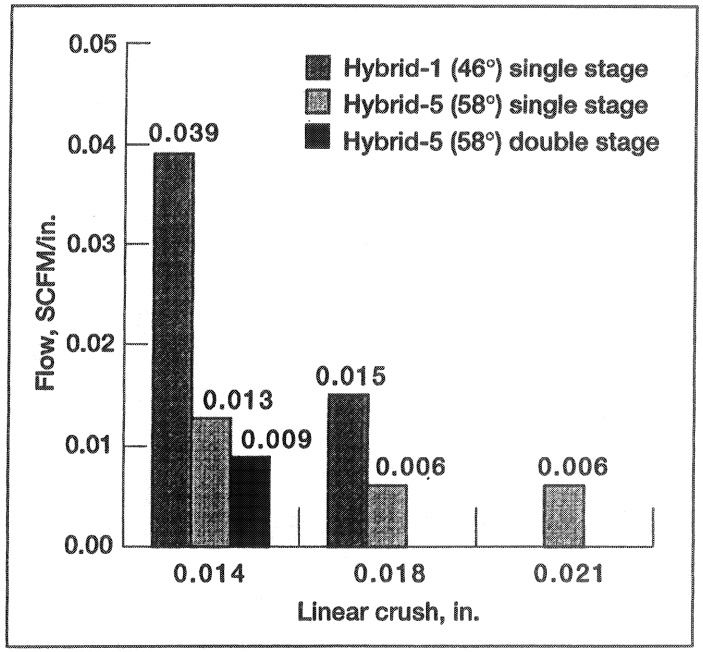

- High braid angle hybrid seal exhibited 1/2 - 1/3 the leakage of low braid angle hybrid for same linear crush, but had 6x unit pressure
- Two stage seals leaked less than single stage seals
  High braid angle/high stiffness hybrid: 30+% less

CD-97-76148

Effect of Compression, Braid, and Staging on Seal Flow

(Δp = 10 psid; T = 1300 °F; After Scrubbing)

All Ceramic Seals (1/16")

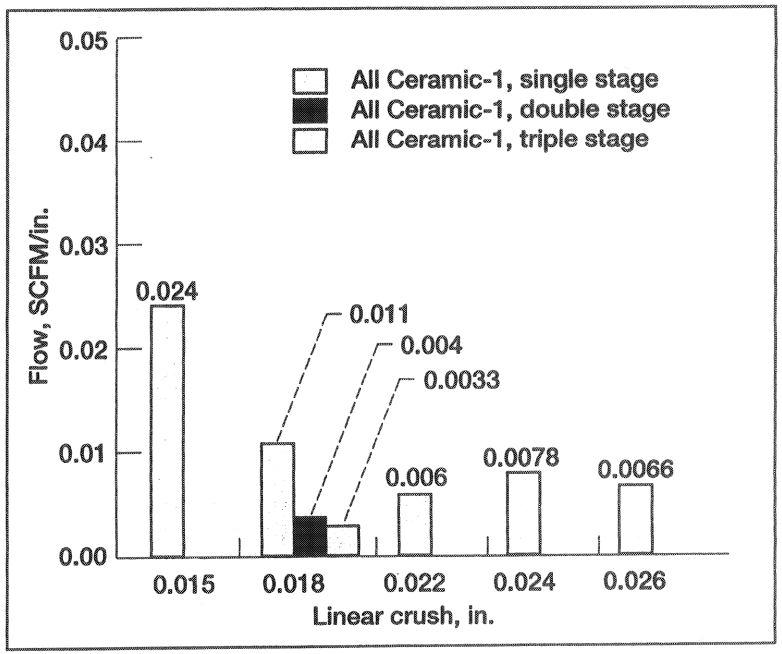

- Multiple stage seals leaked less than single stage seals
  - Two stage seals: 60% less
  - Three stage seals: 70% less

CD-97-76149

Effect of Staging on Seal Pressure Drop
Multiple Stage Seals, After Scrubbing

All Ceramic: 2 Seals
.018" Linear Crush

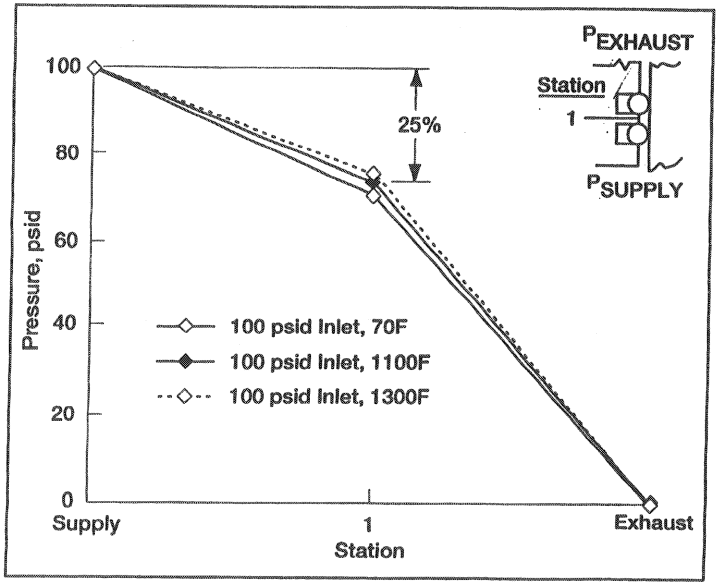

All Ceramic: 3 Seals
.018" Linear Crush

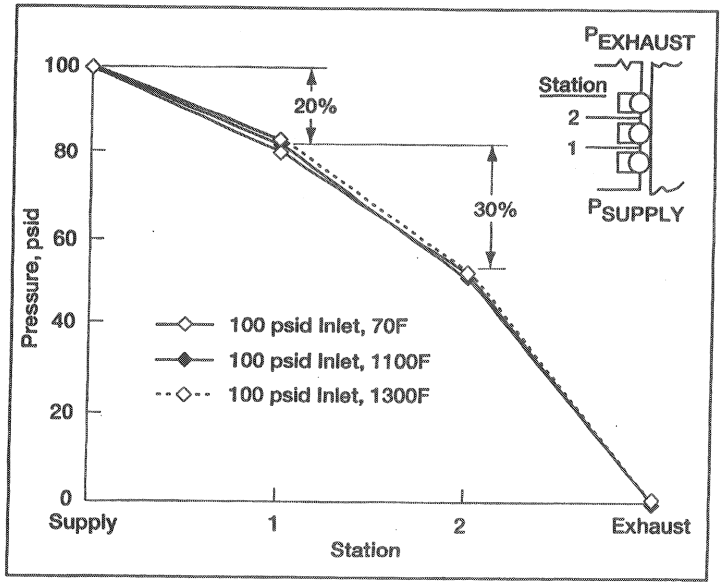

CD-97-76146

Three Stage Seal Durability

After Hot Scrubbing

10 cycles x 0.13" Stroke at 1300°F

Static
Pressure
Taps
3 Places

Seals survived accelerated seal durability cycle at temperature

CD-97-76144

P&W Turbine Vane Seal Requirements

- Operate hot
  - Seal/metal temperature: 1200 °F
  - Gas stream temperature: last stage vane
- Exhibit low leakage – minimize cooling requirements
- Permit relative vane-to-shroud thermal growths
- Seal complex turbine airfoil geometries
- Resist abrasion in high acoustic environment
- Maintain structural integrity

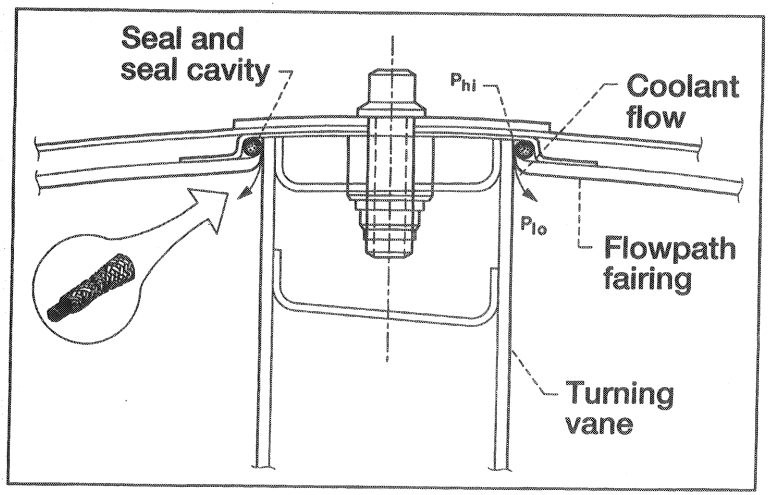

CD-97-75257

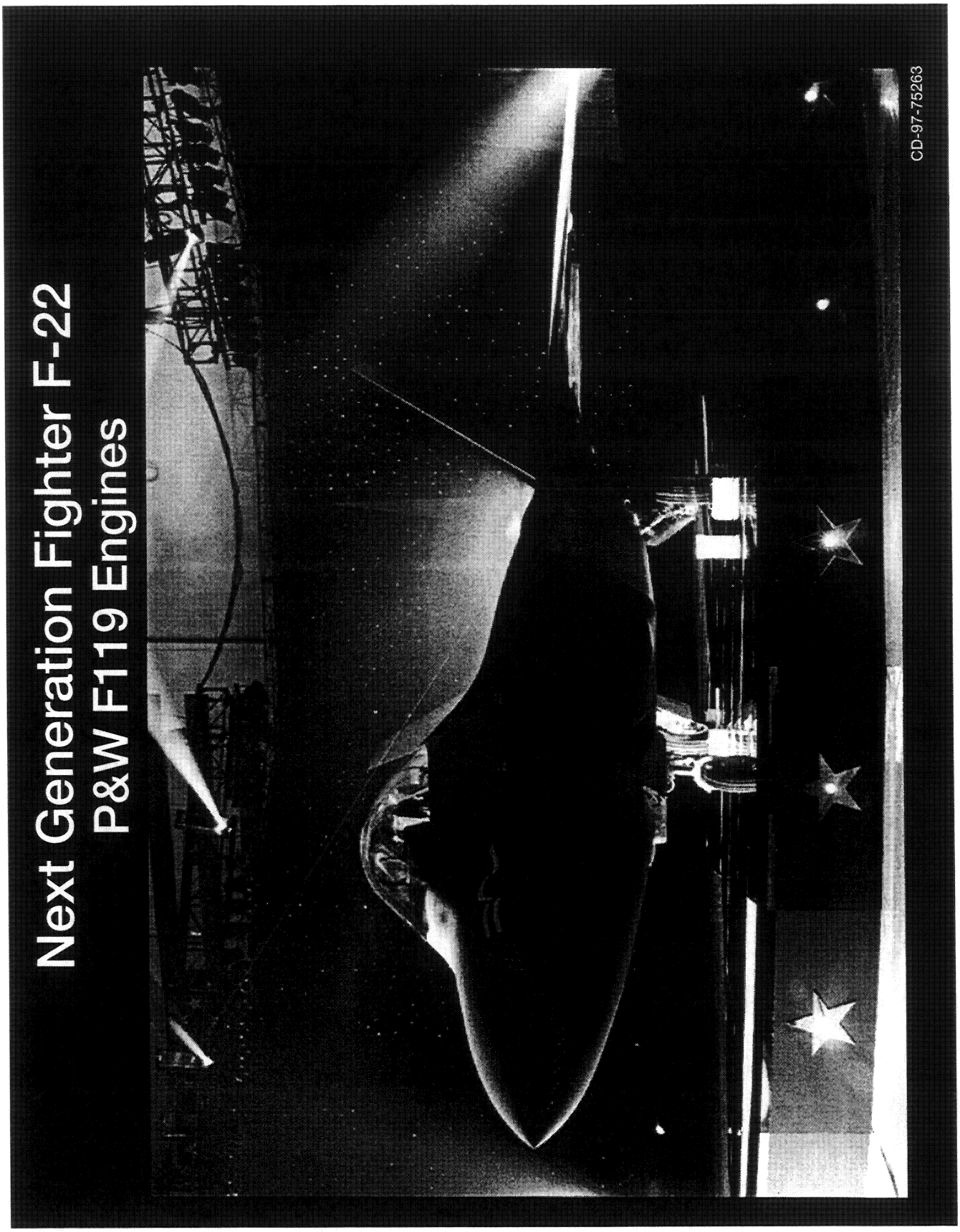
Next Generation Fighter F-22
P&W F119 Engines
CD-97-75263

Summary and Conclusions

- Increasing hybrid seal braid angle and core coverage reduced leakage 1/2 -1/3rd that of conventional hybrid for same compression but increased stiffness and unit preload

- Using multiple seals, the last stage seal always resists the largest percentage of the inlet pressure
  - + Two stage seals: 1st stage resists 25%
    2nd stage resists 75%
  - + Three stage seals: 1st stage resists 20%
    2nd stage resists 30%
    3rd stage resists 50%

- Multiple stage seals reduced leakage considerably
  - + Hybrid seals 2 stage: 30+% reduction
  - + Ceramic seals 2 stage: 60+% reduction
    3 stage: 70+% reduction

Braided Rope Seals are meeting an important need arising from increased engine cycle temperature, performance, and efficiency requirements

CD-97-76153