US005349879A

United States Patent [19]

Brooks

[11] **Patent Number: 5,349,879**

[45] **Date of Patent: Sep. 27, 1994**

[54] **HIGH-ACCURACY DISCRETE POSITIONING DEVICE**

[75] Inventor: **John J. Brooks**, Santa Ynez, Calif.

[73] Assignee: **Santa Barbara Research Center**, Goleta, Calif.

[21] Appl. No.: **954,701**

[22] Filed: **Sep. 30, 1992**

[51] **Int. Cl.**[5] **F16H 21/44**

[52] **U.S. Cl.** ..... **74/96**; 74/105; 74/89; 74/99 R

[58] **Field of Search** ..... 74/25, 49, 51, 67, 68, 74/89, 116, 99 R, 105

[56] **References Cited**

U.S. PATENT DOCUMENTS

584,130	6/1897	Griswold	74/67
4,898,042	2/1990	Parsons	74/68

FOREIGN PATENT DOCUMENTS

52-31456	3/1977	Japan	74/89
561039	6/1977	U.S.S.R.	74/68

OTHER PUBLICATIONS

Mechanisms & Mechanical Devices Source Book by Nicholas P. Chironis p. 30, FIG. 1 and p. 111, FIG. 8; copyright 1991.

Primary Examiner—Allan D. Herrmann
Assistant Examiner—David W. Laub
Attorney, Agent, or Firm—W. C. Schubert; W. K. Denson-Low

[57] **ABSTRACT**

An article (**30**) is controllably and precisely positioned at one of three discrete locations defined by a linkage. The positioning apparatus includes two independently driven cranks (**34, 42**), with a link (**50**) pivotably connected between the two cranks (**34, 42**). Another connector (**44**) is pivotably connected between one of the cranks (**34** or **42**) and the article (**30**) to be positioned. The cranks (**34, 42**) are rotationally adjusted so that the pivot points (**52, 54**) of the link (**50**) are collinear with the axes of rotation of the cranks (**40, 48**), thereby defining one of the three discrete locations. Additional cranks and links can be provided to define additional discrete locations.

18 Claims, 3 Drawing Sheets

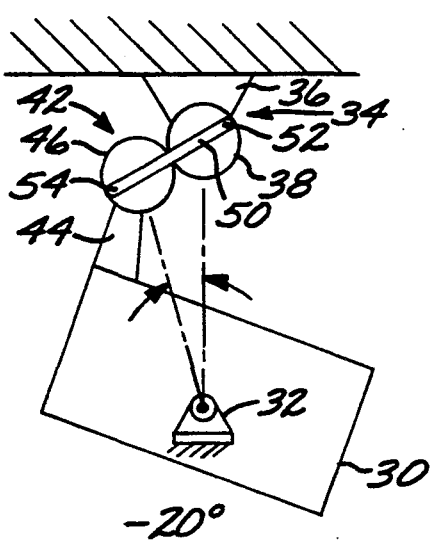

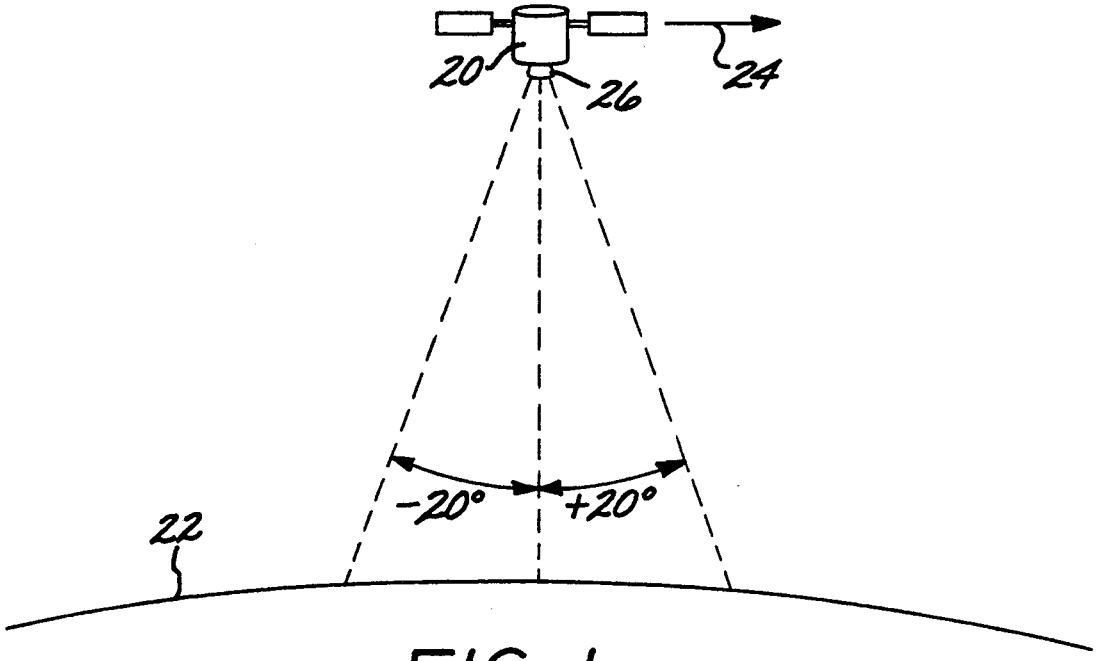

FIG. 1

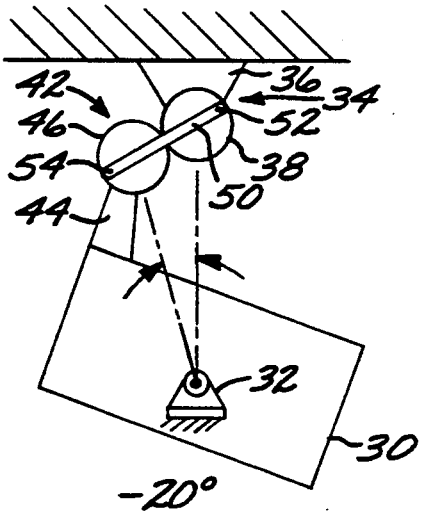

FIG. 2(a)

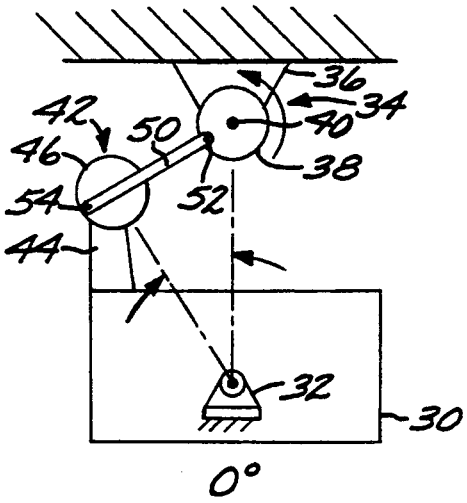

FIG. 2(b)

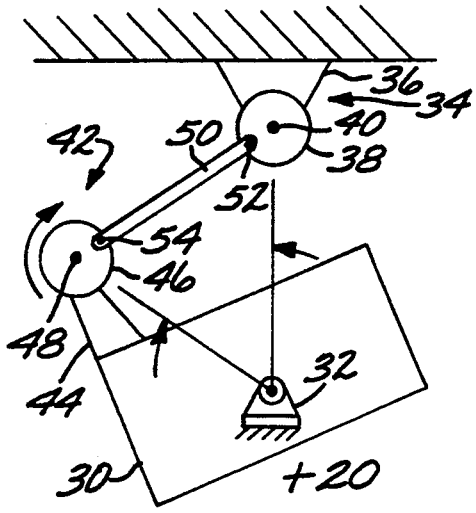
36
34
40
38
42
50
52
54
46
48
44
32
30
+20

FIG. 2(C)

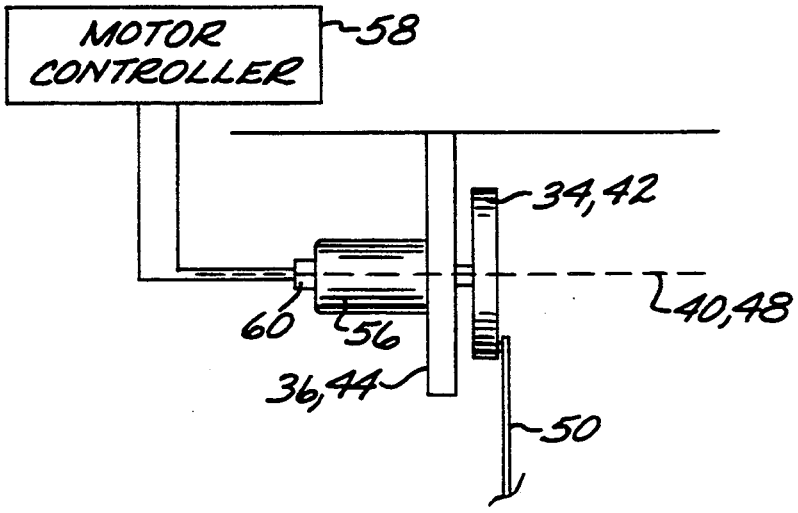
MOTOR CONTROLLER
58
34,42
40,48
60
56
36,44
50

FIG. 3

FIG. 4A

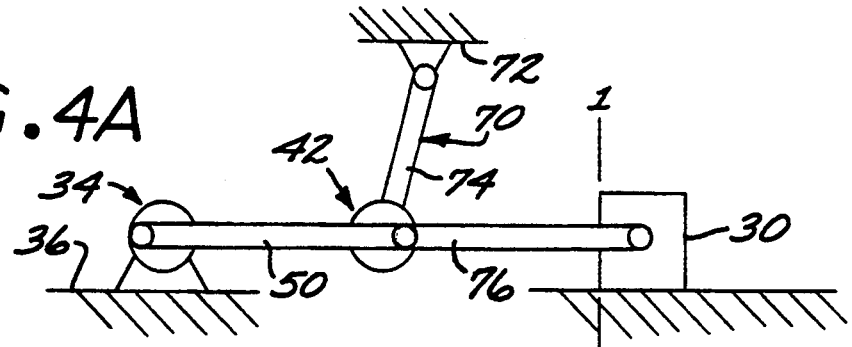

FIG. 4B

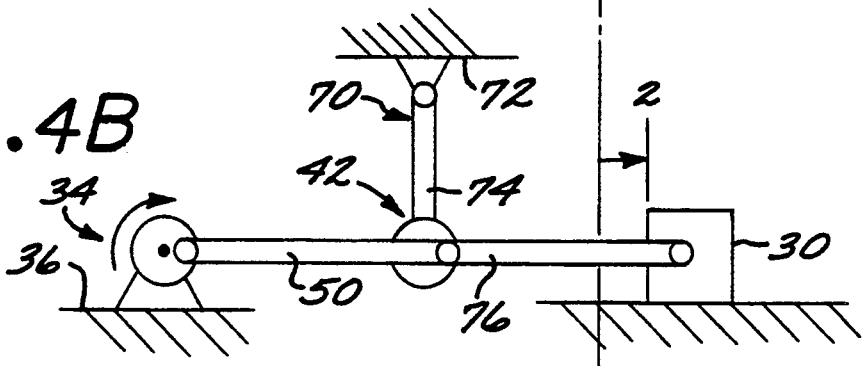

FIG. 4C

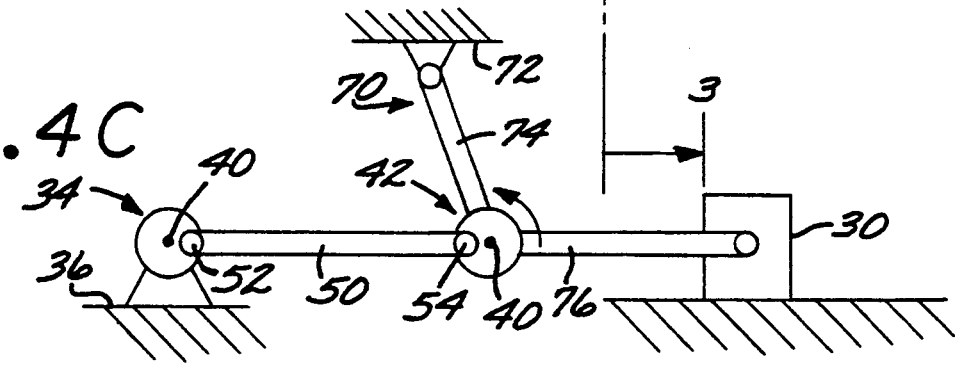

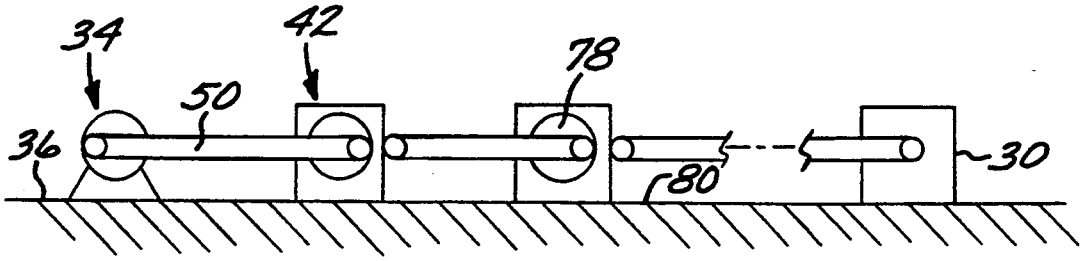

FIG. 5

HIGH-ACCURACY DISCRETE POSITIONING DEVICE

This invention was made with Government support under Contract No. NAS5-31350 awarded by NASA. The Government has certain rights in this invention.

BACKGROUND OF THE INVENTION

This invention relates to mechanical positioning systems, and, more particularly, to a linkage system for controllably and precisely positioning an article at discrete locations defined by the linkage.

It is often necessary to mechanically position an article at one of several precisely defined, discrete locations, and then to move the article between those locations. A variety of complex devices are available to perform such functions. A high-precision torque motor operating in conjunction with a positional encoder is one example of such a positioning device. Such devices can be extremely costly to purchase and may have limited reliability due to their complexity.

In an example of a requirement for precisely positioning an article at discrete locations, a sensor platform in an earth surveillance satellite is rotatably mounted so that its sensor may be aimed at locations along its ground track. In one version, the sensor platform must be capable of being precisely directed in one of three nominal discrete angular orientations: straight down (0 degrees reference), +20 degrees forward, or −20 degrees backward along the ground track. There is no requirement that the sensor platform be arbitrarily aimable at angles other than these nominal positions.

In one approach to meeting this requirement, a high-precision, microprocessor-controlled torque motor with an optical or electrical positional encoder feedback may be used to achieve precise positioning. The torque motor is connected to the rotatable sensor platform. The encoder measures the actual position of the sensor platform. In operation, the proper encoder position for a required angular orientation selected and commanded by the microprocessor. The encoder-based feedback system confirms that the command has resulted in the required angular orientation of the sensor platform or, if not, provides information for making the required adjustment of the torque motor.

Such a torque motor/encoder system can cost on the order of $250,000. It is complex, and therefore more prone to breakdowns and limited service life than an otherwise comparable but less complex device. The system also has the shortcoming that it provides more capability than required in some aspects, and less in others. For example, the torque motor/encoder system permits precise positioning at angular orientations other than the required three discrete positions. On the other hand, because the encoder is essentially a digital device, its increments of angular positioning at the discrete orientations is limited by the size of the digital steps and therefore may have difficulty achieving the required three discrete positions with a high degree of accuracy. Other types of precision positioning units are available, but generally also have high costs, are complex, and suffer from various shortcomings.

There is a need for an improved method and apparatus for precisely positioning an article to a discrete angular or linear location. The apparatus should be relatively inexpensive, provide long life and high reliability, and produce good controllability to the nominal location or orientation. The present invention fulfills this need, and further provides related advantages.

SUMMARY OF THE INVENTION

The present invention provides an apparatus and method for controllably and precisely positioning an article at discrete locations. In one form, the approach is used for precise angular positioning, and in another form, for precise linear positioning. The apparatus permits high levels of precision in the article position to be attained using relatively low-precision position-controlling actuators and without the need for a positional monitoring feedback system. It is therefore less costly than comparable conventional systems. The apparatus is not complex, and therefore has expected high reliability and long life.

In accordance with the invention, apparatus for controllably and precisely positioning an article at discrete locations comprises a first crank having a first axis of rotation and a first drive means for driving the first crank about the first axis of rotation, and a second crank having a second axis of rotation and a second drive means for driving the second crank about the second axis of rotation. A first link has a first end pivotably joined to the first crank at a first pivot point displaced from the first axis of rotation and a second end pivotably Joined to the second crank at a second pivot point displaced from the second axis of rotation. There is means for Joining the second crank to an article to be positioned.

Using this apparatus, an article is precisely positioned at one of three discrete nominal locations by controlling the two drive means to rotate the cranks such that the pivot points of the links on the cranks and the centers of the cranks are collinear. Since the cranks are nearly in their relative "top dead center" or "bottom dead center" locations when so adjusted, even relatively large angular adjustments produce only relatively small movements of the link extending to the article being positioned. Thus, the crank actuators can be relatively imprecise drive means and still achieve precise positioning of the article without feedback control. The positioning at the discrete locations is more nearly analog in nature than conventional positioning devices, providing greater precision in the adjustment.

These principles can be extended to the addition of more cranks and links. With each addition, more discrete locations are defined.

The approach of the invention can be used for both angular and linear positioning of the article. In each case, the first crank is supported from a fixed support. For angular positioning at discrete locations, the second crank is fixed to the article to be positioned, and the article is rotationally supported from a fixed support. For linear positioning at discrete locations, the second crank is movably supported from a fixed support and the article is movable.

The present approach provides an important advance in the art of positioning systems, where the positioning is to be at discrete, pre-defined locations. The apparatus is more precise than conventional techniques, yet also less expensive and more reliable, when used in this particular type of application. Other features and advantages of the present invention will be apparent from the following more detailed description of the preferred embodiment, taken in conjunction with the accompanying drawings, which illustrate, by way of example, the principles of the invention.

BRIEF DESCRIPTION OF THE DRAWINGS

FIG. **1** is a schematic depiction of a satellite with a rotatable sensor platform;

FIG. **2** is an elevational view of a positioning apparatus used for rotational positioning at discrete locations, with FIGS. **2**(*a*), **2**(*b*), and **2**(*c*) showing the three discrete locations;

FIG. **3** is an elevational view of a crank and crank actuator;

FIG. **4** is an elevational view of a positioning apparatus used for linear positioning at discrete locations, with FIGS. **4**A, **4**B, and **4**C showing the three discrete locations; and

FIG. **5** is an elevational view of a multistage linear positioning device.

DETAILED DESCRIPTION OF THE INVENTION

The present invention is utilized to position an article at discrete locations. As that term is used herein, positioning an article at discrete locations means that a selected number of particular locations are identified, and the approach of the invention permits the article to be positioned precisely at those discrete locations. This concept of positioning is to be contrasted with the positioning of an article arbitrarily at a continuous range of locations.

The need to position an article at a discrete location arises in many fields, and FIG. **1** illustrates one such application. A satellite **20** orbits above the surface of the earth **22**, moving in a direction marked by arrow **24**. A sensor on the satellite **20** is mounted on a sensor platform **26**. The system specifications require that the sensor platform **26** be capable of rotational movement so that it aims accurately in three (and only three) discrete directions: straight down (0 degrees rotation), +20 degrees rotation so that the sensor views the scene over which the satellite will subsequently pass, and −20 degrees rotation so that the sensor views the scene over which the satellite has already passed.

Existing devices for accomplishing this controlled rotation of the sensor platform are complex and expensive. A typical approach is to use a microprocessor-controlled torque motor to position the platform directly. The actual position of the platform is measured by an optical or electric digital positional encoder, and fed back so that the microprocessor may adjust the position of the platform to that required. The total range of the encoder is divided into digital increments, and the accuracy of the system is limited by the number of available measurement increments. The greater the required angular resolution and the greater the required reliability of the system, the greater the cost. Since the optical positional encoder must be very precise, the cost of the torque motor/feedback encoder system for controlling angular positioning of the sensor platform is high. The high cost also includes the capability to position the torque motor at many locations not required by the application (i.e., all locations other than the discrete locations required by the specification).

FIG. **2** depicts the approach of the invention to the positioning of an article **30** at discrete locations. This approach utilizes components that are relatively imprecise, and therefore less costly, to achieve highly precise positioning of the article. Referring to FIG. **2**, the article **30** is pivotably mounted on a fixed support **32**. A first crank **34** is pivotably mounted to another fixed support **36**. The first crank **34** includes a disk **38** that is rotatably mounted on a first axis of rotation **40** (which extends out of the plane of the illustration FIG. **2**). The first crank **34** driven to a controllable rotation by a motor, to be discussed in greater detail subsequently. A second crank **42** is pivotably mounted to the article **30** by a support rod **44** that is fixed to the article **30**. The second crank **42** includes a disk **46** that is rotatably mounted on a second axis of rotation **48** (which extends out of the plane of the illustration FIG. **2**). The second crank **42** driven to a controllable rotation by a motor, to be discussed in greater detail subsequently.

A link **50** extends from the first crank **34** to the second crank **42**. A first end of the link **50** is pivotably joined to the first crank **34** at a first pivot point **52**, which is on the first crank **34** but is displaced from the first axis of rotation **40**. A second end of the link **50** is pivotably joined to the second crank **42** at a second pivot point **54**.

The positioning apparatus just described permits the article **30** to be mechanically rotated to three discrete angular locations by aligning the pivot points **52** and **54** collinearly with the axes of rotation **40** and **48**. The rotation of the cranks **34** and **42** to three different relative orientations defines such three angular locations. In FIG. **2**(*a*), the cranks are oriented so that the pivot points **52** and **54** are diametrically opposed across the diameters of the cranks. Since the length of the link **50** is constant, the second crank **42** is drawn toward the first crank **34**, causing the article **30** to pivot about its support **32**. In FIG. **2**(*b*), the first crank **34** is rotated by 180 degrees and the second crank **42** is not rotated at all, moving the second crank **42** away from the first crank **34**, thereby rotating tile article **30** about the support **32**. (An identical degree of rotation could have been achieved by not rotating the first crank and rotating the second crank by 180 degrees.) In FIG. **2**(*c*), the first crank **34** is not rotated further from the orientation of FIG. **2**(*b*), but the second crank **42** is rotated by 180 degrees. This rotation causes the second crank **42** to be separated from the first crank **34** even further than in FIG. **2**(*b*), and produces even further rotation of the article **30** about the support **32**.

The amount of rotation of the article **30** is determined by the relative sizes of the cranks **34** and **42** and the length of the link **50**.

As is apparent from the figures, the cranks could be turned less than 180 degrees, so that intermediate rotations of the article **20** can be achieved. However, positioning the cranks such that the pivot points **52** and **54** and the axes of rotation **40** and **48** are aligned produces highly desirable results. These aligned configurations define three discrete locations that can be easily determined by the orientation of the cranks. A high degree of accuracy of the angular orientation of the article **30** can be achieved even when the motors used to drive the cranks are not of high precision, and in the absence of an expensive positional encoder for positional feedback.

This relative improvement in positioning accuracy arises because, at the positions of alignment of the pivot points **52** and **54** and the axes of rotation **40** and **48**, the rate of change of distance between the centers of the cranks with angular orientation of the cranks varies slowly. (The rate of change is much larger when the cranks are oriented so that the points **52**, **54**, **40** and **48** are far from linear alignment.) Thus, a slight misorientation in the cranks, such that the points **52**, **54**, **40**, and **48** are not perfectly aligned, results in a very small misorientation of the article **30** from its desired discrete loca-

tion. Consequently, accuracy of the rotation of the article **30** to within specified tolerances can be achieved with relatively imprecise drives (motors) that angularly orient and position the cranks **34** and **42**. The reduction in the required precision of the drives decreases their cost and increases the likelihood of a long expected service life. Thus, for example, stepper motors can be used as the drives.

FIG. **3** illustrates a drive arrangement for a crank **34** or **42**. The crank **34** or **42** is supported on a base, which may be a fixed support **36** or a movable support rod **44**, respectively. A drive motor **56** is supported on the base, preferably with its output shaft coincident with the axis of rotation of the crank. The drive motor may optionally be laterally displaced from the axis of rotation **40** or **48**, and connected to the shaft of the crank through a drive train such as a gear train or a belt. The drive motor **56** is preferably a stepping motor of the conventional type, whose position is commanded by a motor controller **58**. (The motor controller **58** also commands the position of the other drive motor or motors to achieve the linear positioning discussed previously.) There may be, but need not be, a sensor **60** whereby the controller **58** can sense the position of the shaft of the crank and adjust the motor **56** accordingly. The present drive motor **56** may be a much less complex stepping motor than is required in a conventional arrangement wherein a torque motor rotates the article directly. The present approach does not require an encoder for positional feedback.

FIG. **2** relates to the preferred application of the present approach in angular positioning. This approach may also be used for linear positioning, as shown for one embodiment in FIG. **4**. In FIG. **4**, the same reference numerals are used to refer to corresponding elements of structure as in FIG. **2**. Details of the structure of those elements of structure are the same as described in relation to FIG. **2**, except as will be discussed next. The article **30** is moved in a linear manner, rather than a rotational manner. In FIG. **4**, the article **30** is shown as supported on a table, but it could as easily be free swinging. The first crank **34** is supported from a fixed support **36**. The second crank **42** is pivotably supported by a pivoting mechanism **70** from a second fixed support **72**. In the illustrated pivoting mechanism **70**, a pivoting link **74** is pivotably supported at one end from the second fixed support **72** and rotatably attached at the other end to the second crank **42**. The first crank **24** and the second crank **42** are connected by the link **50**, and the second crank **42** is connected to the article **30** by a connecting rod **76**. The connecting rod **76** is similar to the support rod **44** in function, except that it is pivotably mounted to the article **30**.

Using the same principles discussed in relation to FIG. **2**, the article **30** may be moved linearly between three discrete locations, as shown in FIGS. **4A**, **4B**, and **4C**. The article **30** may also be adjusted at these discrete locations by rotating the cranks **34** and/or **42** as discussed previously. The same principle of a small change in distance between the cranks **34** and **42** with a rotation in the cranks, when the pivot points **52** and **54** and the axes of rotation **40** and **48** are aligned or nearly aligned, is equally applicable. There may be a slight misalignment of those four points as the system moves between the states of FIGS. **4A**, **4B**, and **4C**, as the pivoting link **74** remains of constant length. This slight misalignment is predictable and may be accounted for geometrically. In the discrete locations depleted in FIGS. **4A**, **4B** and **4C**, the four points may in fact be aligned, although each rotation to move between the discrete locations may not be exactly 180 degrees due to the constant length of the pivoting link **74**. These various states of alignment and near alignment are within the scope of the invention. Because only small linear changes are produced by relatively larger angular rotations, slight misalignments have negligible effects on the positioning achievable with the present approach and are acceptable.

A variation of the linear positioning configuration is shown in FIG. **5**. In this version, additional discrete positions can be defined by adding additional cranks represented by the crank **78**. Thus, the cranks **34**, **42** drive an additional drivable linkage to the crank **78**, and to additional cranks that may be added in a linear manner. In this form, the cranks **42** and **78** are slidably supported from a fixed support **80** (which may be the same as the fixed support **36**). The axes of rotation of the cranks and the pivot points of the links between the cranks are perfectly aligned when the cranks are so adjusted.

The present invention provides a relatively inexpensive approach to positioning articles at discrete locations. The positioning can be either angular or linear. The approach uses drive motors of relatively low accuracy to achieve high angular or linear accuracy of the article, resulting in lower costs for the system. Although a particular embodiment of the invention has been described in detail for purposes of illustration, various modifications may be made without departing from the spirit and scope of the invention. Accordingly, the invention is not to be limited except as by the appended claims.

What is claimed is:

1. Apparatus for controllably and precisely positioning an article at discrete locations, comprising:

a first crank having a first axis of rotation;

first drive means for controllably driving the first crank about the first axis of rotation;

a second crank having a second axis of rotation;

second drive means for controllably driving the second crank about the second axis of rotation, at least one of the first drive means and the second drive means being a stepper motor;

a link having a first end pivotably joined to the first crank at a first pivot point displaced from the first axis of rotation and a second end pivotably joined to the second crank at a second pivot point displaced from the second axis of rotation; and

means for joining the second crank to an article to be positioned.

2. The apparatus of claim **1**, further including

controller means for controlling the first drive means and the second drive means to rotate the first crank and the second crank, respectively, to positions such that the first pivot point and the second pivot point are collinear with the first axis of rotation and the second axis of rotation.

3. The apparatus of claim **1**, wherein the article is a linkage having

a third crank having a third axis of rotation; and

means for driving the third crank about the third axis of rotation.

4. The apparatus of claim **1**, further including a linkage having

at least one additional crank, each additional crank having its own axis of rotation; and

means for driving each additional crank about its own axis of rotation.

5. The apparatus of claim 1, wherein the first crank is supported from a fixed support.

6. The apparatus of claim 5, wherein the second crank is supported from a fixed support.

7. The apparatus of claim 1, wherein the article is rotationally supported from a fixed support.

8. The apparatus of claim 1, wherein each of the cranks is disk shaped.

9. Apparatus for controllably and precisely positioning an article at discrete locations, comprising:

a first crank having a first axis of rotation, the first crank being supported from a first fixed support;

first drive means for driving the first crank about the first axis of rotation;

a second crank having a second axis of rotation;

second drive means for driving the second crank about the second axis of rotation;

a first link having a first end pivotably joined to the first crank at a first pivot point displaced from the first axis of rotation and a second end pivotably joined to the second crank at a second pivot point displaced from the second axis of rotation; and

a second link having a first end pivotably joined to the second crank and a second end joined to an article to be rotationally positioned at one of three discrete angular orientations, the article to be positioned being rotationally supported from a fixed support.

10. The apparatus of claim 9, wherein the article is a sensor platform.

11. The apparatus of claim 9, further including

controller means for controlling the first drive means and the second drive means to rotate the first crank and the second crank, respectively, to positions such that the first pivot point and the second pivot point are collinear with the first axis of rotation and the second axis of rotation.

12. The apparatus of claim 9, wherein at least one of the first drive means and the second drive means is a stepper motor.

13. Apparatus for controllably and precisely positioning an article at discrete locations, comprising:

a first crank having a first axis of rotation, the first crank being supported from a first fixed support;

first drive means for driving the first crank about the first axis of rotation;

a second crank having a second axis of rotation;

a first link pivotably supported at one end to a second fixed support and rotatably attached at the other end to the second crank;

second drive means for driving the second crank about the second axis of rotation;

a second link having a first end pivotably joined to the first crank at the first pivot point displaced from the first axis of rotation and a second end pivotably joined to the second crank at a second pivot point displaced from the second axis rotation; and

a third link having a first end pivotably joined to the second crank and a second end pivotably joined to an article to be linearly positioned at one of three discrete linear positions.

14. The apparatus of claim 13, further including

controller means for controlling the first drive means and the second drive means to rotate the first crank and the second crank, respectively, to positions such that the first pivot point and the second pivot point are collinear with the first axis of rotation and the second axis of rotation.

15. The apparatus of claim 13, wherein at least one of the first drive means and the second drive means is a stepper motor.

16. A method for controllably and precisely positioning an article at discrete locations, comprising the steps of:

rotationally supporting an article to be positioned from a fixed support;

providing an apparatus comprising

a first crank having a first axis of rotation through a center of the first crank,

first drive means for driving the first crank about the first axis of rotation,

a second crank having a second axis of rotation through a center of the second crank,

second drive means for driving the second crank about the second axis of rotation,

a first link having a first end pivotably joined to the first crank at a first pivot point displaced from the first axis of rotation and second end pivotably joined to the second crank at a second pivot point displaced from the second axis of rotation, and

means for joining the second crank to said article; and

adjusting the position of the first crank and the second crank so that the first pivot point and the second pivot point are collinear with the center of the first crank and the center of the second crank, thereby precisely positioning the article at one of the three discrete locations.

17. The method of claim 16, wherein the first crank is supported from a fixed support.

18. Apparatus for controllably and precisely positioning an article at discrete locations, comprising:

a first crank having a first axis of rotation, the first crank being supported from a first fixed support;

first drive means for driving the first crank about the first axis of rotation;

a second crank having a second axis of rotation, the second crank being slidably supported along a second fixed support;

second drive means for driving the second crank about the second axis of rotation;

a first link having a first end pivotably joined to the first crank at a first pivot point displaced from the first axis of rotation and a second end pivotably joined to the second crank at a second pivot point displaced from the second axis of rotation;

a second link having a first end pivotably joined to the second crank and a second end pivotably joined to an article to be linearly positioned at one of three discrete linear positions; and

controller means for controlling the first drive means and the second drive means to rotate the first crank and the second crank, respectively, to positions such that the first pivot point and the second pivot point are collinear with the first axis of rotation and the second axis of rotation.

* * * * *