Assessment of Proper Bonding Methods and Mechanical Characterization FPGA CQFPs

Milton Davis (NASA/GSFC)

Table of Contents

- Discussion of fractured leads on FPGA during flight vibration
- Actions taken post failure to determine root cause and resolution
  - FEA and vibration testing
  - SEM/EDS failure assessment
- Assessing bonding methods for surface mount parts
  - Critical analysis properties obtained
  - Assessment of random fatigue damage
- Conclusion
  - Summary of findings
  - Possible future work

CQFP Lead Fracture

- After disassembling the ACE configuration, photographs showed six leads cracked on FPGA RTSX72SU-1 CQ208B package located on the RWIC card
- An identical package (FPGA RTSX32SU-1 CQ208B) mounted on the RWIC did not result in cracked pins due to vibration.
- The ETU was successfully qualified to through thermal and vibration test at qualification levels (14.1 GRMS, 2 min per axis, while the flight was taken to proto-flight levels (10 GRMS, 1 min per axis).

CQFP Lead Fracture

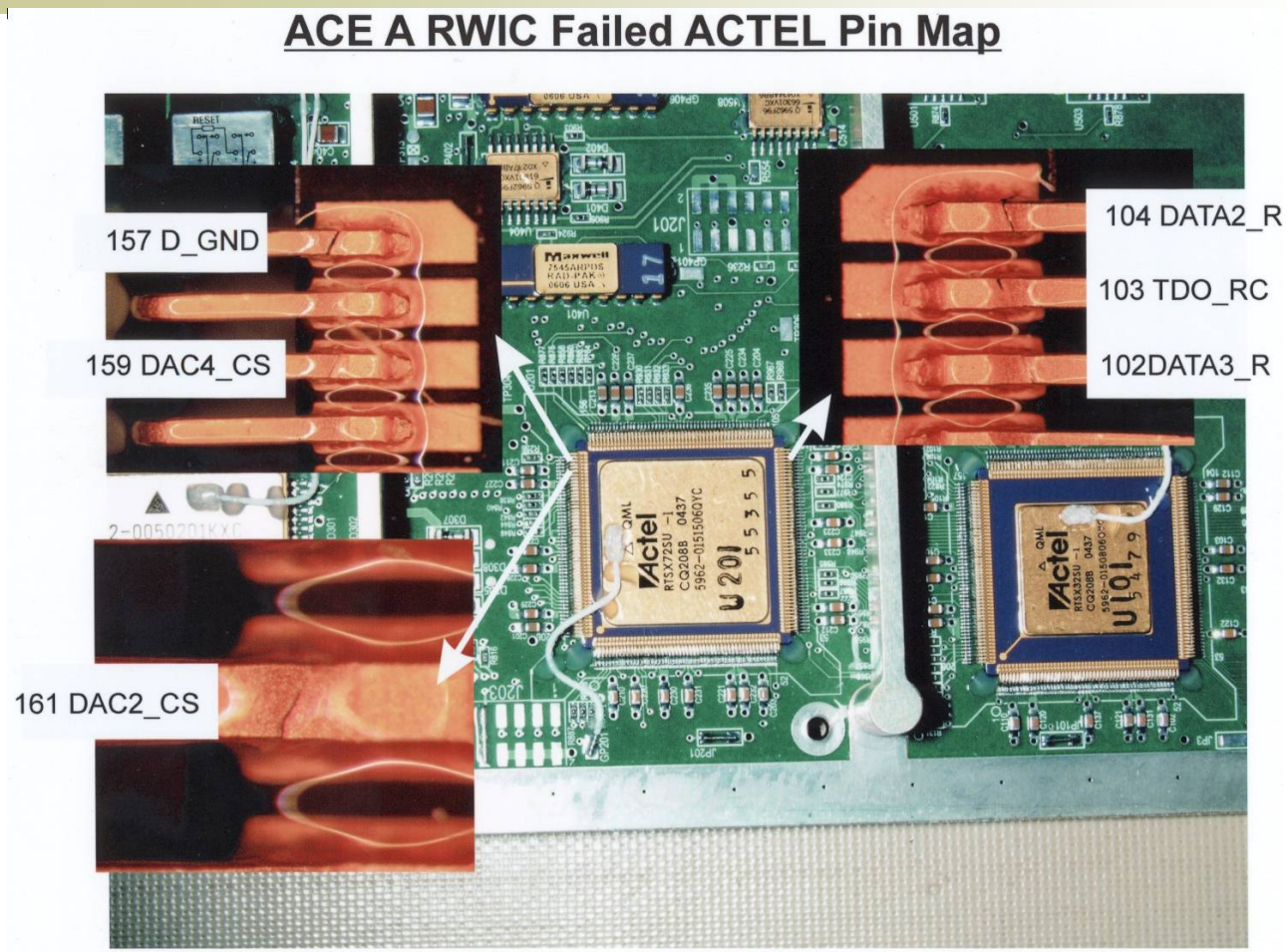

Figure - Six cracked leads on ACTEL FPGA 72SU CQFP during last axis of flight vibration

FPGA Lead Failure Theories

1. Workmanship issue in the lead-forming on this part or how the component was soldered to the board
2. Material defect in the leads of the FPGA packages
3. Board was not mounted securely in the card guides, which may have been a result of slippage or de-metallization on card guide (wedge-tainer) engagement surface
4. A filler was not mixed with the staking material to add the proper stiffness to the corners of the component
5. Shaker table controller was inputting higher loads than the desired test profile
6. ETU qualified design was not fully implemented in the Flight build
   - ETU build of the RWIC had a thermal compound (Nusil CV 2942) placed underneath both of the 32SU and 72SU packages
7. Natural frequency of the PCB was very close to that of the chassis causing amplification response acceleration G level

Actions Taken Post-Failure

- Re-produce failure to evaluate theories related to workmanship, clamping force of PCB, component selection and design deviation
  - FEA performed to characterize the component's mechanical behavior when subjected to various bonding methodologies
  - Testing performed to validate the FEA modeling and aid in deciding the proper solution
- Assess root cause
  - Scanning electron microscopy (with X-ray microanalysis) and energy dispersive spectrometry (SEM/EDS)
  - Fault-tree Analysis

FEM Analysis

- Model built with composite plates, solids, and beams
- Modal and random vibe analysis performed prior to testing:
  - Characterize mechanical behavior (f_N, σ_{Lead} vs σ_{Ult} & $\sigma_{Fatigue}$)
- Results correlate with test results

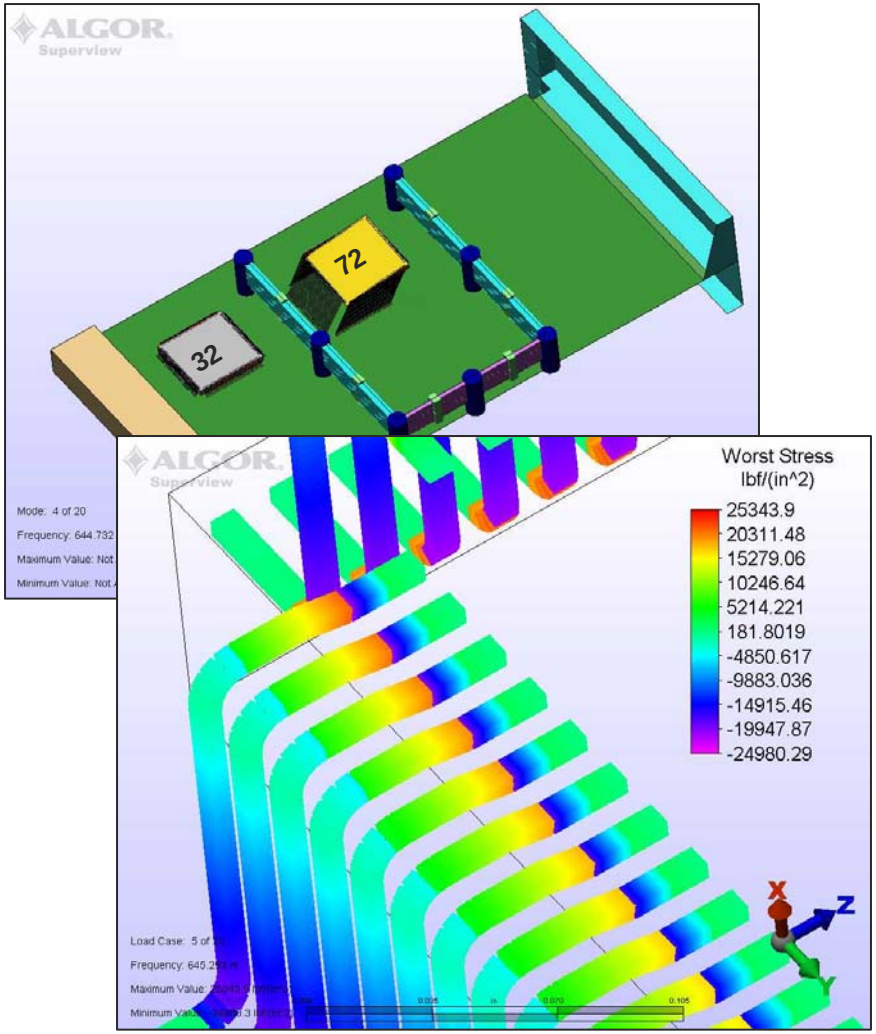

Test Setup and Inputs

- Sine sweep test: ¼ g from 20 to 2400 Hz at 4 octs/min on Z and Y (// and ⊥ to PCB respectively)
- Accelerometers placed on board, chassis and parts to monitor results with varying bond methods
  - No interstitial material
  - Mimicking the flight build - only a corner bond (Arathane 5753)
  - Only an under-fill (Nusil CV-2942)
  - Only a corner bond (Epoxy 2216)
  - Mimicking the qualified build - under-fill and corner bond (Arathane 5753 or Epoxy 2216 Gray)

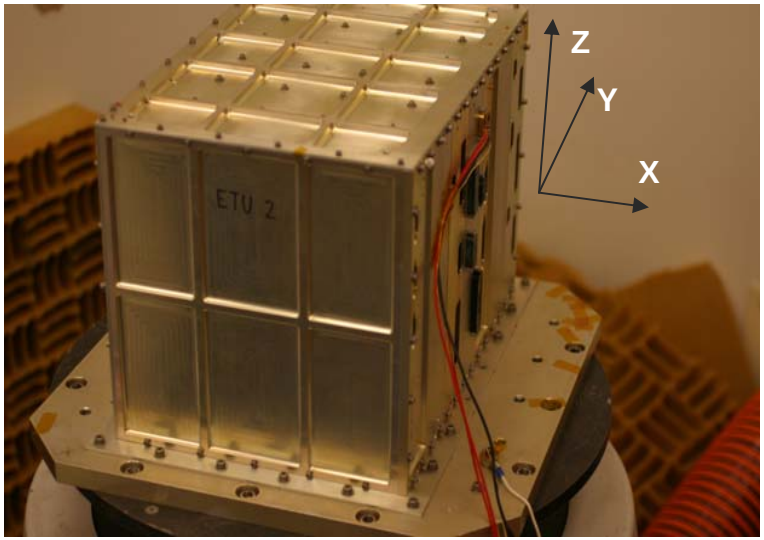

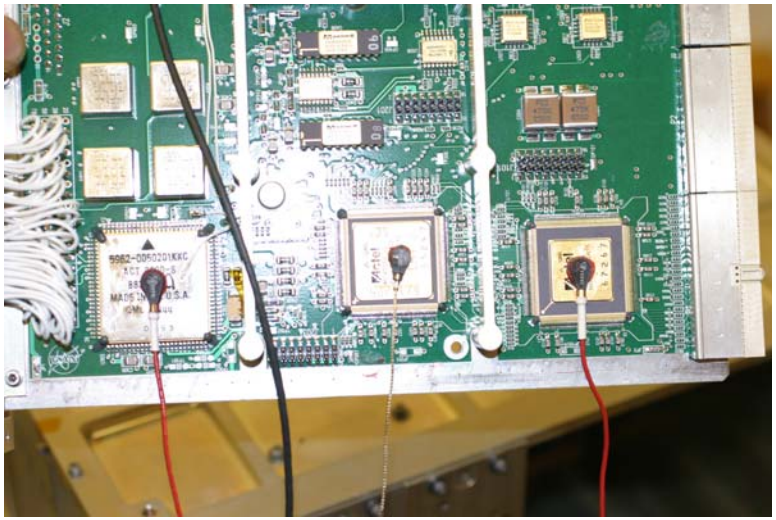

Component Response Due to Out-of-plane Loading (Axial)

Component Response	Assessment Method	Frequency Response [Hz] as Function of Bonding			
		No Bonding	Uralane Corner-bond	Nusil CV-2942 Under-fill	Epoxy 2216 Corner Bond
Axial & Bending	**Board Flexure**				
	Test Results	**348**			
	FEA Assembly	**340**	**340**	**340**	**347**
	Hand Calcs	**325**			
72SU Motion					
Rocking	Test Results	631			
	FEA Assembly	645	707	2821	3247
	Hand Calcs	667	726	2539	3706
	FEA Component	648	709	2838	3828
Twisting	Test Results	~880			
	FEA Assembly	905	1022	1913.6	
	FEA Component	908	1026	1926.19	6350
32SU Motion					
Rocking	Test Results	1003			
	FEA Assembly	948	1074	3340	>3247
	Hand Calcs	1106	1170	3368	4965
	FEA Component	952	1079	3431	
Twisting	Test Results	~1350			
	FEA Assembly	1339	1565	2435	>3247
	FEA Component	1344	1573	2443	6555

Load ⊥ PCB Plane

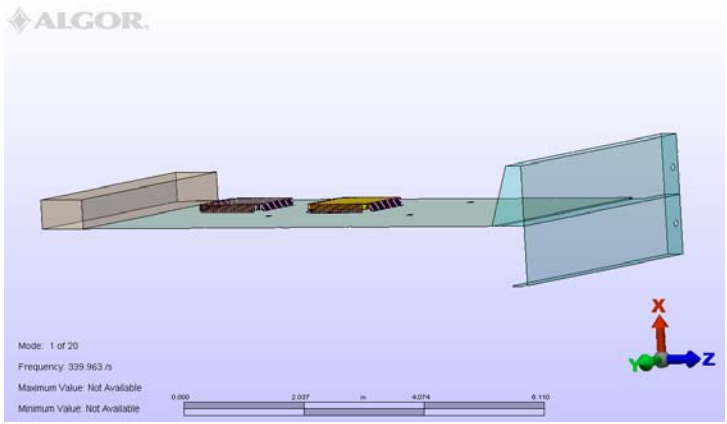

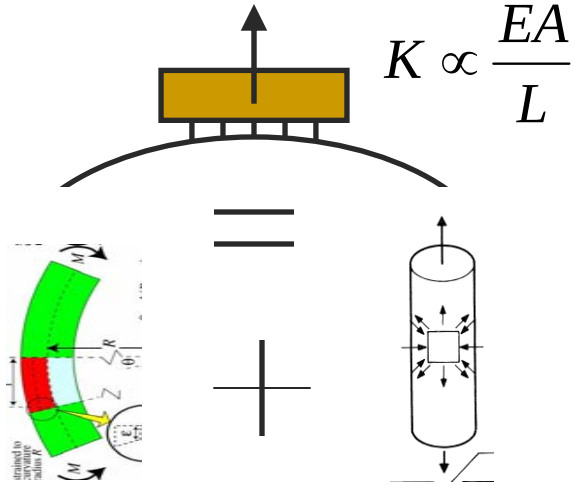

Bending Moment **Axial Loading**

Component Response Due to In-plane Loading (Rocking)

Component Response	Assessment Method	Frequency Response [Hz] as Function of Bonding			
		No Bonding	Uralane Corner-bond	Nusil CV-2942 Under-fill	Epoxy 2216 Corner Bond
Axial & Bending	Board Flexure				
	Test Results	348			
	FEA Assembly	340	340	340	347
	Hand Calcs	325			
72SU Motion					
Rocking	**Test Results**	**631**			
	FEA Assembly	**645**	**707**	**2821**	**3247**
	Hand Calcs	**667**	**726**	**2539**	**3706**
	FEA Componen	**648**	**709**	**2838**	**3828**
Twisting	Test Results	~880			
	FEA Assembly	905	1022	1913.6	
	FEA Component	908	1026	1935	6350
32SU Motion					
Rocking	**Test Results**	**1003**			
	FEA Assembly	**948**	**1074**	**3340**	**>3247**
	Hand Calcs	**1106**	**1170**	**3368**	**4965**
	FEA Componen	**952**	**1079**	**3436**	
Twisting	Test Results	~1350			
	FEA Assembly	1339	1565	2435	>3247
	FEA Component	1344	1573	2443	6555

Load // PCB Plane

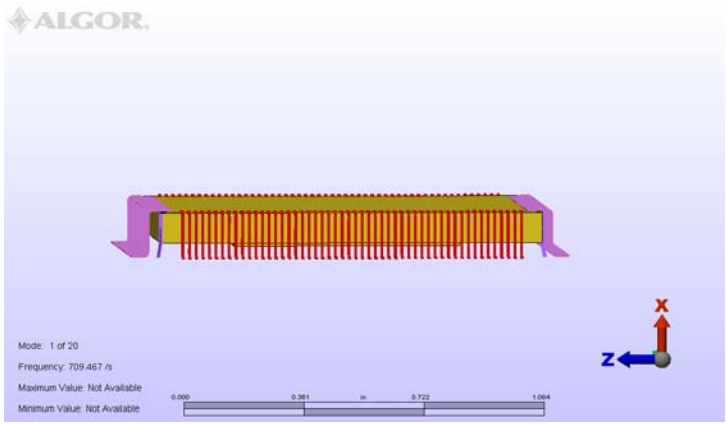

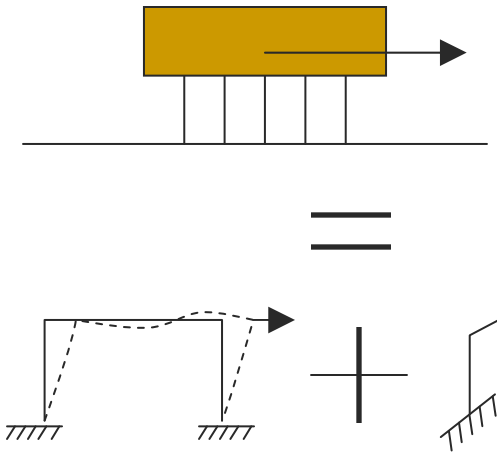

$$K \propto \frac{EI}{L^3}$$

Lead in-plane and out-of-plane bending

Component Response Due to In-plane Loading (Twisting)

Component Response	Assessment Method	Frequency Response [Hz] as Function of Bonding			
		No Bonding	Uralane Corner-bond	Nusil CV-2942 Under-fill	Epoxy 2216 Corner Bond
Axial & Bending	Board Flexure				
	Test Results	348			
	FEA Assembly	340	340	340	347
	Hand Calcs	325			
72SU Motion					
Rocking	Test Results	631			
	FEA Assembly	645	707	2821	3247
	Hand Calcs	667	726	2539	3706
	FEA Component	648	709	2838	3828
Twisting	**Test Results**	**~880**			
	FEA Assembly	**905**	**1022**	**1913.6**	
	FEA Componen	**908**	**1026**	**1935**	**6350**
32SU Motion					
Rocking	Test Results	1003			
	FEA Assembly	948	1074	3340	>3247
	Hand Calcs	1106	1170	3368	4965
	FEA Component	952	1079	3436	
Twisting	**Test Results**	**~1350**			
	FEA Assembly	**1339**	**1565**	**2435**	**>3247**
	FEA Componen	**1344**	**1573**	**2443**	**6555**

Twisting

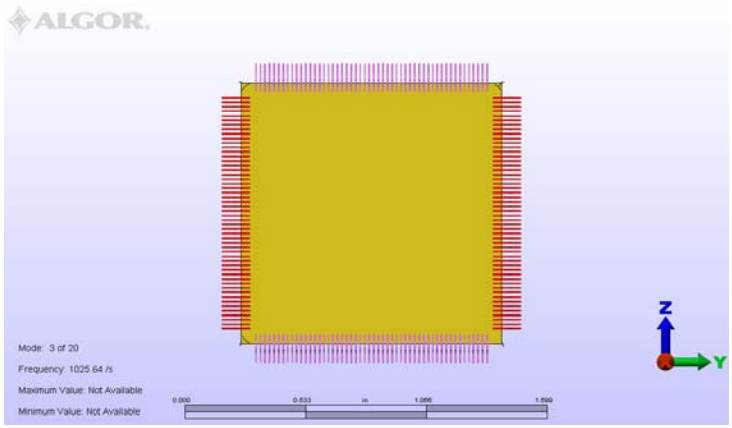

Flexure

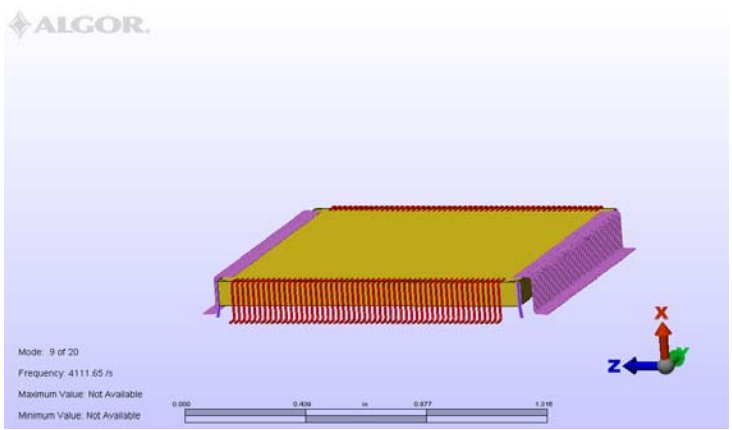

SEM/EDS Failure Assessment

Results indicated Assessment

- No material defects in pin
- Pins fractured due to stress exceeding stress limitation
- Material analysis conveyed grain size of material is between 50 and 80 micro-meters
- Location of fractured pins correlates well with location of highest stress from FEA

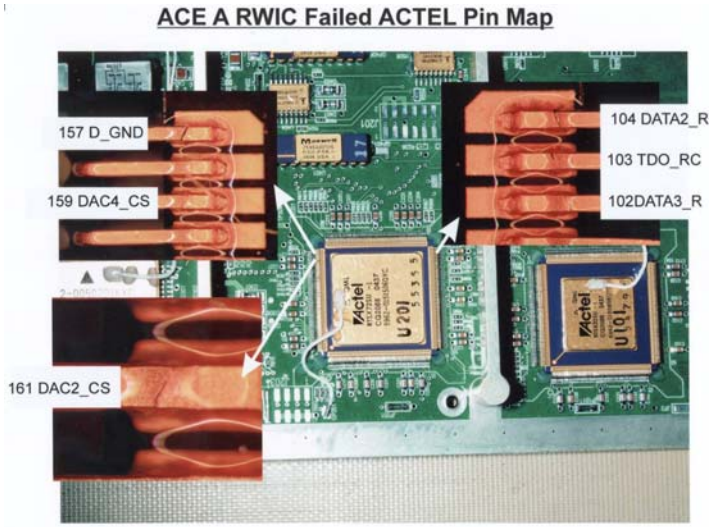

Figure - Mapping of the failed pins

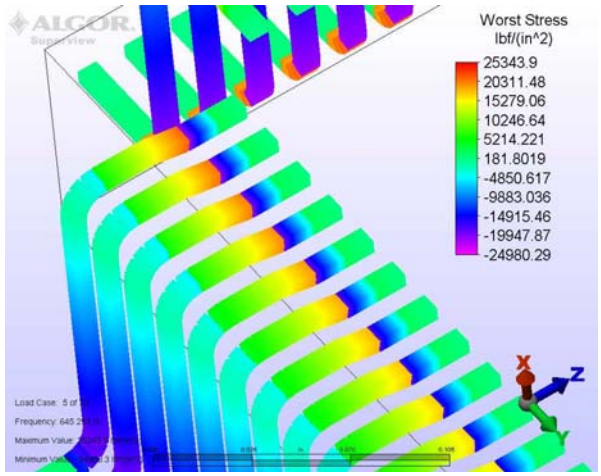

Figure - Stress results from FEA due to loading // to PCB plane

Findings from Studies Conducted

- Lead Workmanship – Ruled out by inspection at several test points
- Lead Material Defect – Ruled out by SEM/EDS inspection of leads
- Board Mounting – Ruled out by verification of card-guide clamp force
- **Staking Workmanship - Materials assessment indicates the Cab-O-Sil filler content in the Uralane was 7% instead of the recommended 14% (less filler means less support)**
- Shaker Table Loads – Ruled out by examination of test control accel responses
- **Design Deviation – Verified that the ETU build has Nusil CV-2942 as an under-fill with Uralane staking in the corners of the FPGA packages**
- **PCB/Component Amplification – Possible that chassis, PCB and components could have resonance coupling**
- **72SU 2X heavier and leads 1.2 X longer than 32SU package**

Assessment of Bonding Methods

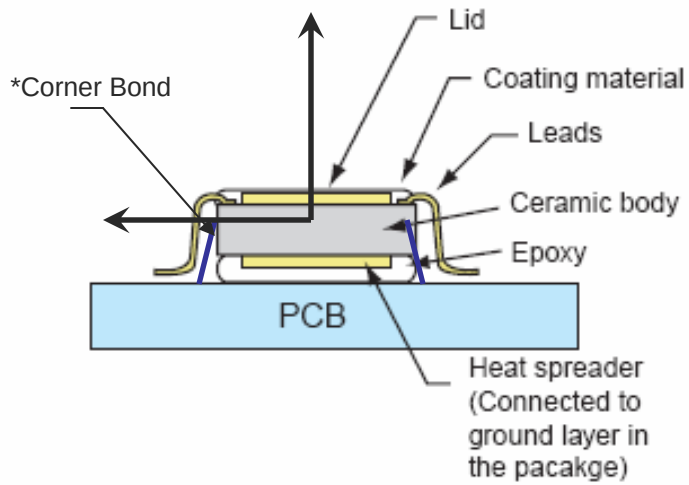

Figure 8 • Top Coating and Bottom Epoxy on CQ Package with Heat Sink on the Bottom

- ACTEL suggests following for CQ256 and CQ352:
  - No suggestion for material types
  - A non [electrically] conductive epoxy/glue applied between board and component base post solder to absorb energy during vibration
  - **Top (UV) cure for high stresses in braze area

* There is no suggestion from ACTEL about bonding from the corner to the PCB
** UV cure materials not approved for flight

Critical Mechanical Properties
E, ζ, & σ_{Limit}

E as function of f_N for adhesives from DMA				
Material	1 Hz	640 Hz	1000 Hz	2000 Hz
Nusil CV2942	30.6	40	40.8	42.1
5753 (14% Cabosil)	10.1	19.3	20.1	21.4
2216 Grey	1557	3125	3200	3308

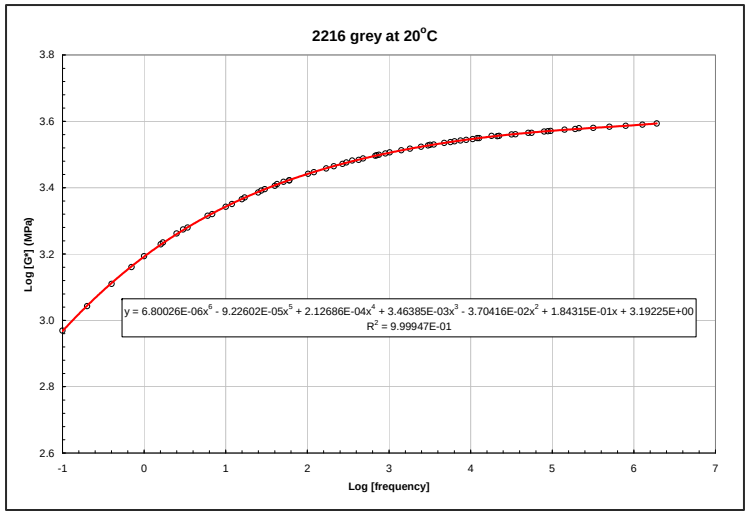

Comparison of Damping Ratios for 72SU Part			
	Fn (Hz)	Damping Ratio	Error Factor
Single DOF Beam Bending	645	0.010	0.921
Single DOF PCB Motion	341	0.027	2.534
Typical Project Recommended	n/a	0.020	1.872
Half-Power' Test Data	631	0.011	1.000

Fatigue Limit of Kovar as Function of R, Grain Size and K					
Stress Ratio R	**Grain Size**	**b**	**K, Stress Concentration**	**σ (Ultimate)**	**σ (Fatigue Limit)**
0.1(notched)	14 μm		1	65ksi @ 10^4 cycles to failure	40ksi @ 10^7 cycles to failure
-1	65 μm	13.9	1	49ksi @ 10^4 cycles to failure	30ksi @ 10^7 cycles to failure
-1	**65 μm**	**5.8**	**2**	**49ksi @ 10^4 cycles to failure**	**15ksi @ 10^7 cycles to failure**
0.1	65 μm		1	29ksi @ 10^4 cycles to failure	13ksi @ 10^7 cycles to failure
0.1(notched) Kt = 6.8	14 μm		1	20ksi @ 10^4 cycles to failure	6ksi @ 10^7 cycles to failure
***unknown notched**	n/a	6.4	2	59ksi @ 10^4 cycles to failure	14ksi @ 10^3 cycles to failure

Simple Calculations for Stiffness and F_N

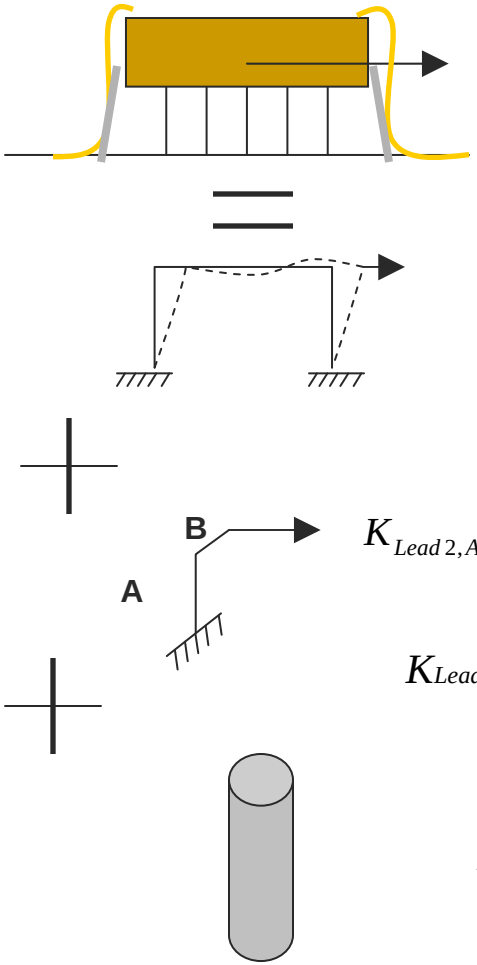

$$K_{Lead1} = \left(\frac{h^3}{24EI_1} \left(1 + \frac{3}{6(h/L)+1} \right) \right)^{-1}$$

2-D Frame In-Plane Loading

$$K_{Lead\,2,A} = \left(\frac{h^3}{3EI_2} \right)^{-1}, K_{Lead\,2,B} = \left(\frac{(L/2)^3}{12EI_2} \right)^{-1}$$

$$K_{Lead\,2} = \left(\frac{1}{K_{Lead\,2,A}} + \frac{1}{K_{Lead\,2,B}} \right)^{-1}$$

$$K_{CornerBond} = \frac{L_{CornerBond}^{\;3}}{3(EI)_{CornerBond}}$$

$$f_N = \frac{1}{2\pi} \left(\frac{K_{Combined}}{W/g} \right)^{1/2}$$

Response and Fatigue Results

Attachment Method	E	f_N	Stress Results (Load // PCB)		Cumulative Damage (R_N) K=2, σ_L=96MPa		Cumulative Damage (R_N) K=2.5, σ_L=77MPa	
	[MPa]	[Hz]	FEA [MPa]	Hand Calc [MPa]	FEA	Hand Calc	FEA	Hand Calc
72SU (No Bonding)		648	131	149	0.773	0.973	1.159	0.973
7% filled Uralane CB	19.3	707	114	141	0.918	0.749	1.321	0.749
Nusil CV-2942 UF	40	2821	42	62	0.000	0.013	0.001	0.013
Epoxy 2216 CB	3125	3706	3	48	0.000	0.003	0.000	0.003
32SU (No Bonding		952	63	77	0.143	0.023	0.239	0.023
7% filled Uralane CB	19.3	1079	73	74	0.020	0.019	0.046	0.019
Nusil CV-2942 UF	40	3368	4	35	0.000	0.000	0.000	0.000
Epoxy 2216 CB	3125	4965	2	27	0.000	0.000	0.000	0.000

Summary of Results

- Simple calculations derived to calculate the response and fatigue life of the package fairly accurately
- Shorter packages exhibit more response when loaded by out-of-plane displacement of PCB while taller packages exhibit more response when loaded by in-plane acceleration of PCB
- Increasing stiffness of component (via high modulus bonding material) drives the frequency and resultant stress out of launch load region (simulated by GEVS vibration profile)
- Under-fill does not contribute to reducing stress in leads due to out-of-plane PCB loading
- Under-fill does not reduce stress from twisting of component as much as corner bonding
- Combination of corner bond and under-fill is best to address mechanical and thermal S/C environment
- Test results of bonded parts showed reduced (dampened) amplitude and slightly shifted peaks at the un-bonded natural frequency and an additional response at the bonded frequency
- Stress due to PCB out-of-plane loading was decreased only in the corners when only a corner bond was used

Possible Future Work

CQFP Fatigue Assessment

- Investigate discrepancy in fatigue damage predicted
  - Assess if adding epoxy to the lid (brazing area) is effective for spreading load
  - Quantify and add effect of high stress in brazing area via stress concentration factor or adding pre-load/pre-stress to calculations and analysis
  - Incorporate effects of the responses due to multiple degrees of freedom and amplification due to resonance coupling
  - Add cumulative damage due to sinusoidal vibration, sine-burst and thermal loading
  - Vibrate parts to failure
- Compare fatigue life and fatigue damage cycle ratio computed using FEA and Miner's rule to results from a fatigue assessment software program

Other work

- Thermal and Mechanical Fatigue of Six Sigma packaged ACTEL CCGAs Due to S/C Environment Loading

Contributors

- Milton Davis (Author, Analysis, Test Conductor) - Milton.c.davis@nasa.gov, (work) 301-286-2314

Special thanks to:

- Charles Clagett (Co-Test Conductor)/NASA GSFC/Components and Hardware Systems Branch (596) Branch Head
- Dr. Charles He of Ball Aerospace Supporting GSFC (DMA Analysis)/Materials Engineering Branch (541)
- Joel Gambino/NASA GSFC/Components and Hardware Systems Branch (596) Product Development Lead
- Joseph Roman (Co-Test Conductor)/NASA GSFC/Components and Hardware Systems Branch (596) Lead Electronics Technician
- Dr. Len Wang of Swales GSFC (SEM/EDS Assessment)/Materials Engineering Branch (541)

Citations

- Cook, Robert D. Concepts and Applications of Finite Element Analysis. 4th Edition. University of Wisconsin – Madison, 2002. Stanford University, 2001.
- Gere, James M. Mechanics of Materials. 5th Edition
- Harris, M. Cyril. Shock and Vibration Handbook. 3rd Ed. Columbia University P, 1988.
- Harper, Charles A. Electronics Packaging and Interconnection Handbook. 4th Edition. McGraw Hill, 2005
- Steinberg, Dave S. Vibration Analysis for Electronic Equipment. 3rd Ed. Los Angeles: University of California P, 2000
- Wasynczuk, James A., Hanna, W. D., Ross, Franklin D. R., and Freitag, Thomas A. 'High-Cycle Fatigue of Kovar.' Fatigue of Electronic Materials - ASTM STP 1153, 1994
- Young, Warren C. and Budynas, Richard G. Roark's Formulas for Stress and Strain. 7th Ed. McGraw-Hill, 2002.

Acronyms & Abbreviations

Acronyms

- ACE – Attitude Control Electronics
- CAD – Computer Aided Drafting
- CCGA – Ceramic Column Grid Array
- CFD – Computational Fluid Dynamics
- CQFP – Ceramic Quad Flat Pack
- DOF – Degree of Freedom
- DMA – Dynamic Mechanical Test
- FEA – Finite Element Analysis
- GEVS – General Environment Verification Specification
- RWIC – Reaction Wheel Interface Card
- S/C – Spacecraft
- SEM/EDS - Scanning electron microscopy (with X-ray microanalysis) and energy dispersive spectrometry
- SDO – Solar Dynamics Observatory

Abbreviations

- // - parallel
- $\perp$ - perpendicular
- CB – Corner Bond
- ζ - Damping Ratio
- E – Modulus of Elasticity
- f^N – Natural frequency
- G, g - acceleration
- K – Stress Concentration
- N – Cycles to Failure
- Q - Transmissibility
- R – Stress Ratio
- R_N – Cumulative Fatigue Damage
- σ - Stress
  - σ_{ULT} – Ultimate Stress
  - σ_Y – Ultimate Stress
- UF – Under-fill