https://ntrs.nasa.gov/search.jsp?R=20110011002 2019-05-01T04:27:57+00:00Z

An Overview of Thermal Distortion Modeling, Analysis, and Model Validation for the JWST ISIM Structure

John Johnston
NASA Goddard Space Flight Center
Mechanical Systems Analysis and Simulation Branch Code 542
Greenbelt, MD

Emmanuel Cofie
SGT, Inc.
Seabrook, MD

4/7/2011

Topics

- Introduction
- ISIM Structure Overview
  - Performance Requirements
  - Development and Verification Approach
- Thermal Distortion Modeling, Analysis, and Model Validation
  - Modeling and Analysis Approach
  - Preliminary Model Validation: Joint and Subassembly Cryo Tests
  - Final Model Validation: Flight Hardware Cryo Test
- Summary

Introduction

- The James Webb Space Telescope (JWST) is a large, infrared-optimized space telescope consisting of the following elements:
  - Optical telescope element (OTE)
  - Integrated science instrument module (ISIM)
  - Spacecraft
  - Sunshield
- The Integrated Science Instrument Module (ISIM) consists of the JWST science instruments (NIRCam, MIRI, NIRSpec), a fine guidance sensor (FGS), the ISIM Structure, and thermal and electrical subsystems.
- JWST's instruments are designed to work primarily in the infrared range of the electromagnetic spectrum, and the instruments and telescope operate at cryogenic temperatures (~35 K for the instruments).

James Webb Space Telescope (JWST)

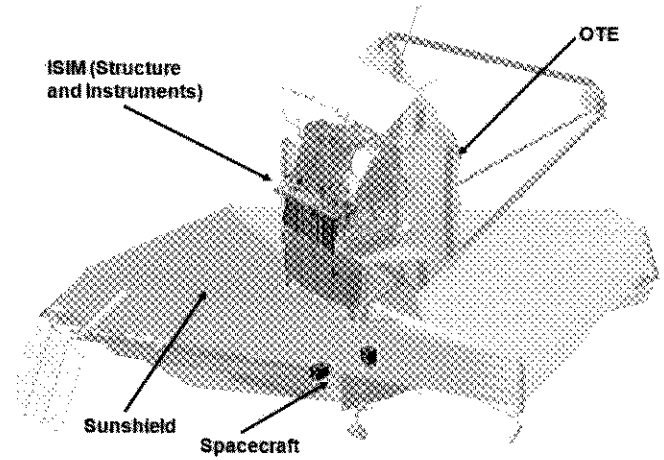

Integrated Science Instrument Module (ISIM)

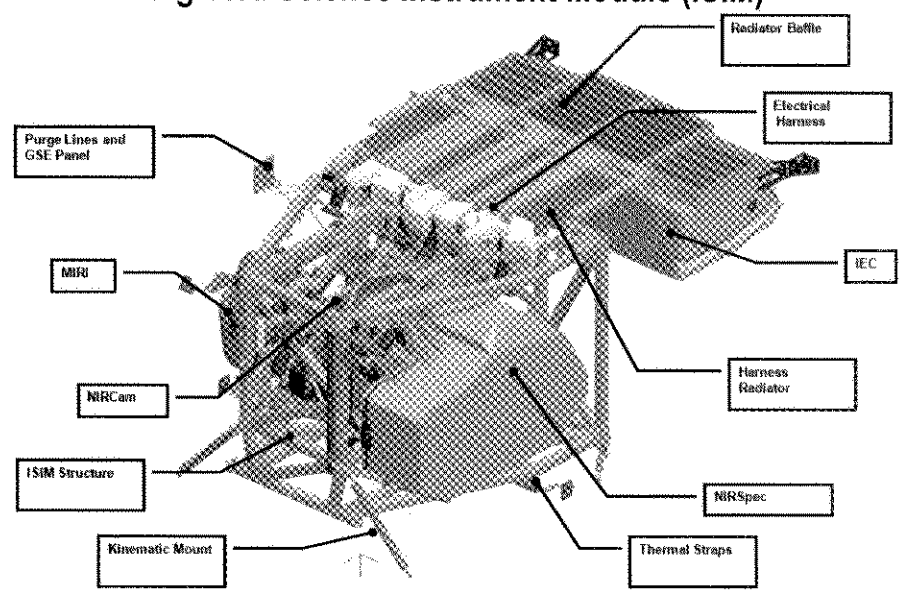

ISIM Structure Overview

- The ISIM Structure is a large, bonded composite frame that serves as the metering structure between the instruments/guider and the telescope.
- The ISIM Structure interfaces to the telescope via kinematic mounts.
- Thermal distortion performance is critical to maintaining the alignment of the instruments to the ISIM Structure.
- Significant effort has been expended on the development of capabilities to predict and measure cryogenic thermal distortion.
- This presentation provides an overview of the ISIM Structure focusing on thermal distortion performance related topics:
  - Optomechanical performance requirements
  - Development and verification approach
  - Thermal Distortion Modeling and Analysis
  - Thermal Distortion Testing and Model Validation

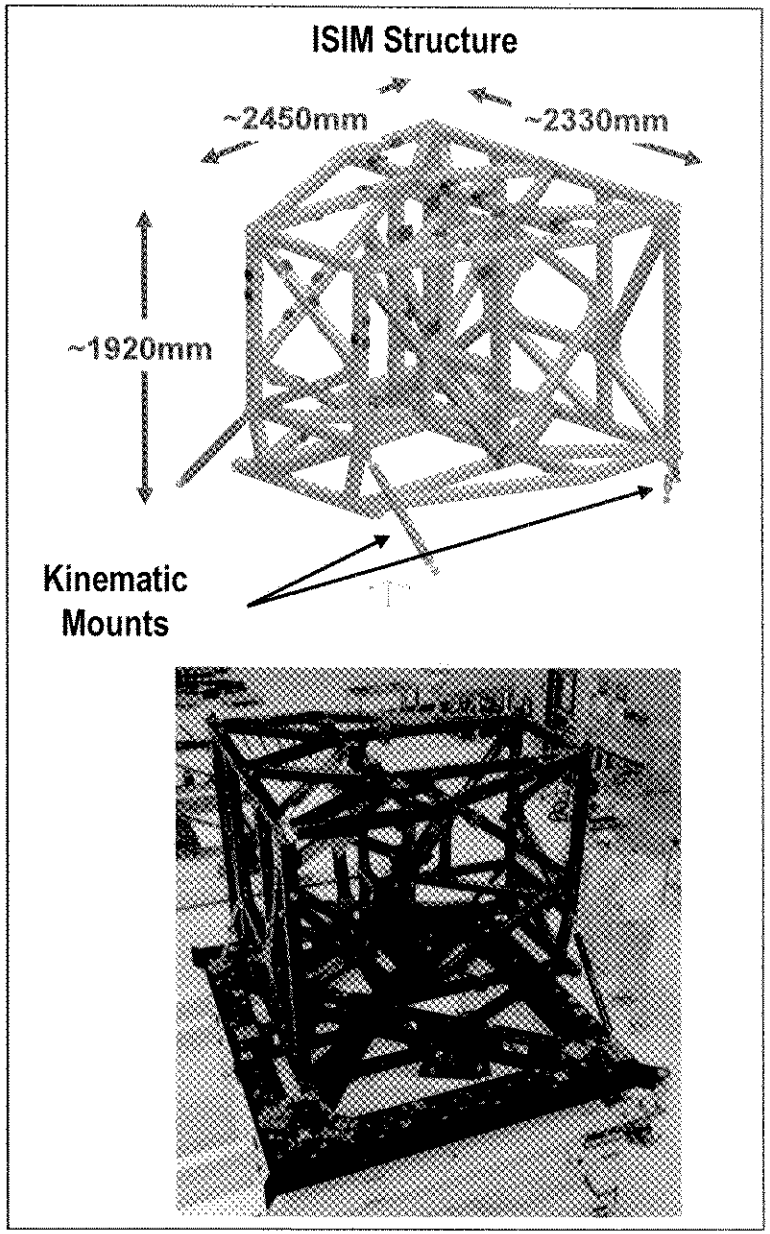

Optomechanical Performance Requirements

- Driving thermal distortion performance requirements for the ISIM Structure relate to cooldown from ambient to cryogenic operating temperature.
- Two optomechanical coordinate systems are referenced in these requirements:
  - Optomechanical Coordinate System A/ACG (OTE Interface = Bottom of Kinematic Mounts)
  - Optomechanical Coordinate System B/BCG (Top of Kinematic Mounts)
- Optomechanical performance requirements are in terms of
  - Rigid body motion of ISIM Structure on KMs: BCG relative to ACG
  - Internal Distortion of ISIM Structure: SI Interfaces relative to BCG

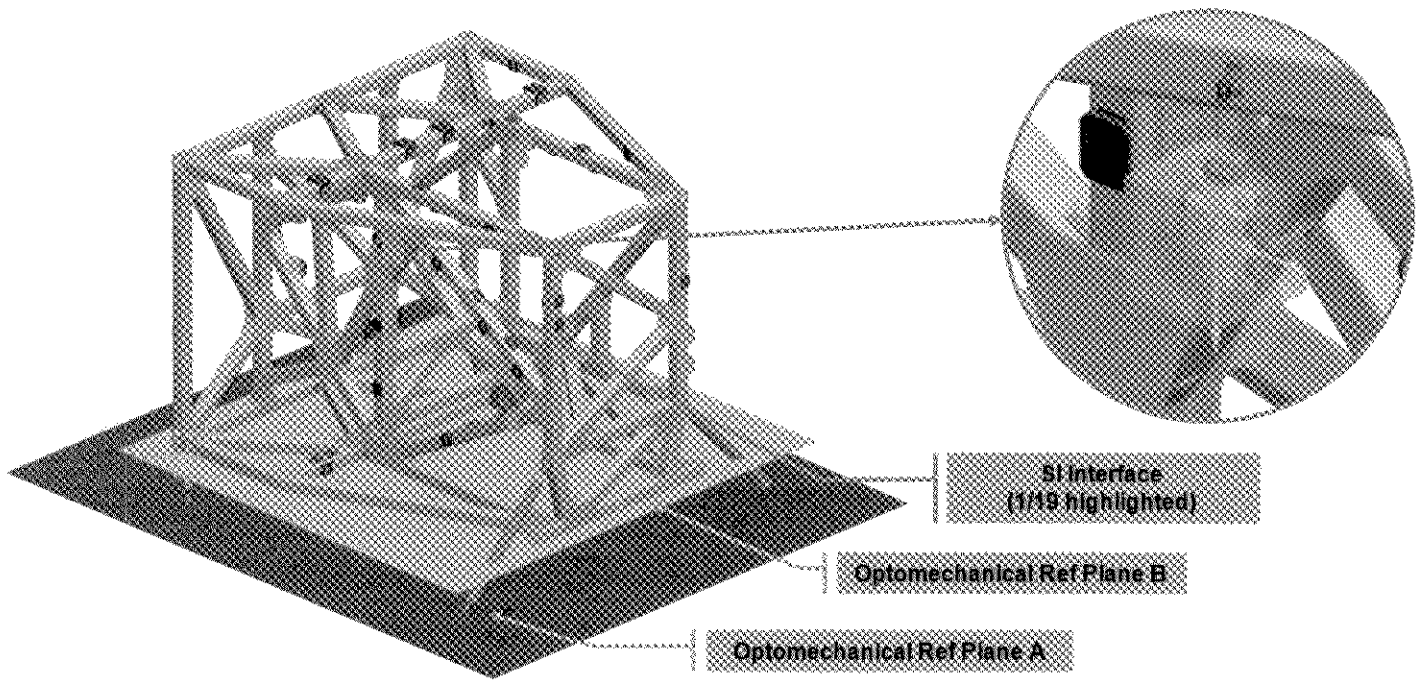

ISIM Structure Development and Verification

ISIM Structure development and verification follows a building block approach with testing at the coupon, joints, sub-assembly, and finally the protoflight ISIM Structure levels.

COMPLETE

Material Characterization Tests
Stiffness, Strength, and CTE

Coupons for Composites, Adhesive, & Metals

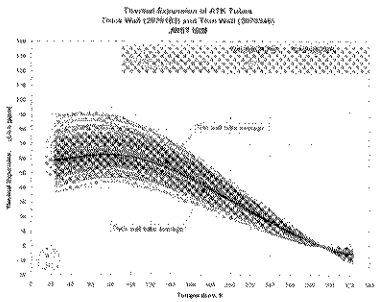

COMPLETE

Joint Development Tests
Ambient and Cryo Strength
Thermal Distortion

Basic Joints: Plug, T, Saddle, Clip
Higher order Joints: K, KT, Diagonal
2nd Structure Items: Click Bonds, Platelets

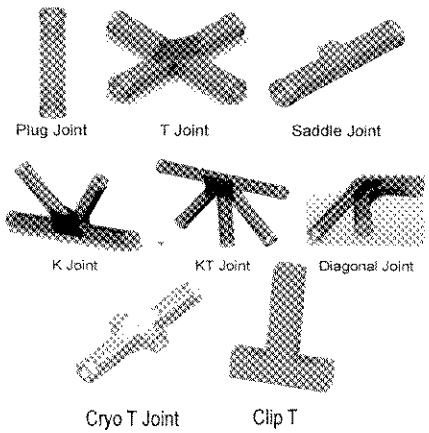

COMPLETE

Sub-element Development Tests
Modal Survey
Thermal Distortion

Breadbox

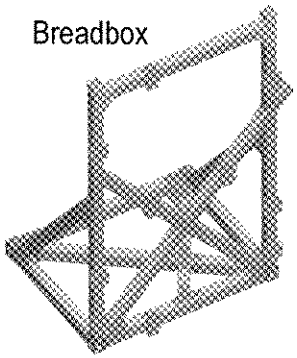

IN PROCESS

ISIM Structure Verification Tests
Cryo Set (Thermal Distortion)
Cryo Proof (Cryo Strength)
Modal Survey
HCC and Static Pull Tests
(Ambient Strength)

Protoflight ISIM Structure

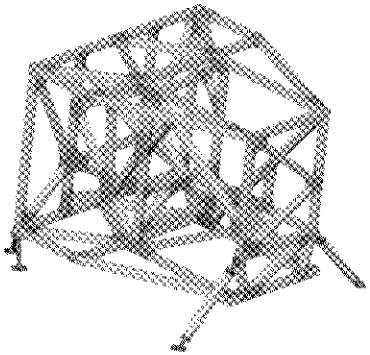

Joint and sub-element test articles incorporate the same major joint types/features as the flight ISIM Structure. Provides confidence that successful development test model validation is applicable to the flight structure.

Thermal Distortion Modeling and Analysis

- The ISIM Structure thermal distortion models are high fidelity (>2 million DOF for the flight structure model) NASTRAN structural models.
  - The composite frame structure is modeled using solid elements to capture fine details such as bond lines and bond shapes.
  - A key aspect of the models is their linkage to materials data specifically generated for the program.
  - The model utilizes temperature-dependent CTE and stiffness properties to accurately predict thermal distortion behavior in terms of both cooldown from ambient to cryogenic temperatures and stability at operational cryogenic temperatures.

- Initial mesh convergence studies were used to establish the mesh size for the global thermal distortion model.
  - During this effort, high fidelity models of representative bonded joints served as the reference standard against which successive thermal distortion model mesh sizes could be compared.
  - Ultimately, a balance between model accuracy and model size defined the final mesh sizes.

Thermal Distortion Modeling and Analysis – cont.

- There are two analysis approaches used in ISIM Structure thermal distortion modeling and analysis:
  - Nominal model approach
  - Stochastic model approach.
- The stochastic model is used to predict the model uncertainty due to factors such as material property (e.g. variability and uncertainty in material property values) and geometric (e.g. bondline thickness) variability. Provides a mean prediction and an uncertainty band determined by multiplying the 95% confidence interval by a modeling uncertainty factor (MUF).
- As per project guidelines, modeling uncertainty factors are used to provide conservatism and margin in thermal distortion predictions.
  - For nominal model predictions, the model validation goal is for predictions multiplied by the 1.6 MUF to bound the measured performance.
  - For stochastic model predictions, the model validation goal is for the predicted uncertainty bandwidth to envelop measured performance including measurement error.
  - Model validation criteria are tied to these analysis approaches and their associated modeling uncertainty factors.

Basic Joint Thermal Distortion Tests

- Joint-level thermal distortion tests characterized cooldown distortion of basic constituent joint types:
  - Plug (Invar fitting: Corner joint)
  - T (Gusset and Clip joint)
  - Saddle (Invar fitting: Instrument Interfaces)
- Test articles were cooled from room temperature to cryogenic operating temperature (~40 K) and distortions were characterized via interferometers.
- Test measurements were compared with analytical predictions to validate modeling and analysis approach.

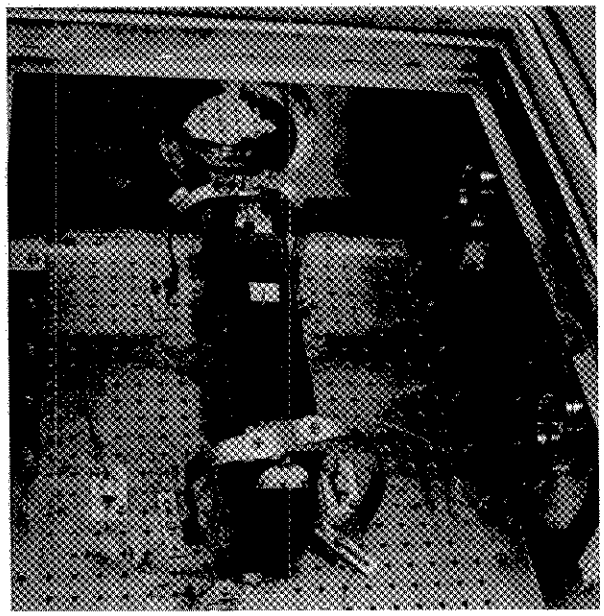

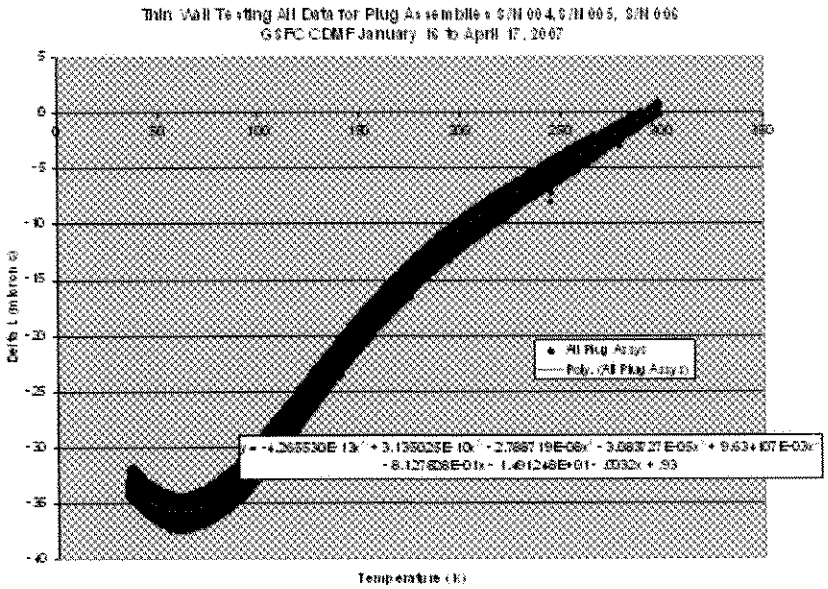

Basic Plug Joint Model Validation

- Thermal distortion models of the test articles were generated using the final mesh sizing from the mesh refinement study.
- Compared measured and predicted axial cooldown distortion of plug joint test articles.
- Model validation successful:
  - Stochastic model predictions envelop the test measurements including measurement uncertainty.
  - Additionally, the nominal model prediction multiplied by the nominal model uncertainty factor of 1.6 bounds the test measurement.
  - Similar validation achieved for T and Saddle basic joints.

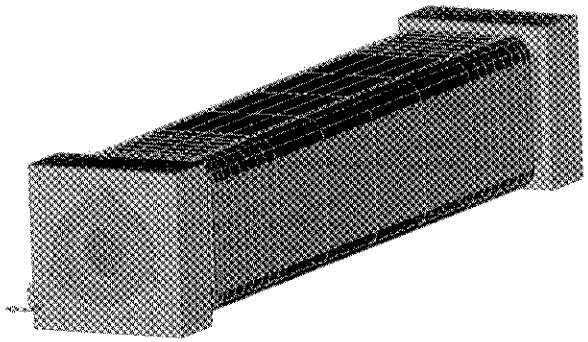

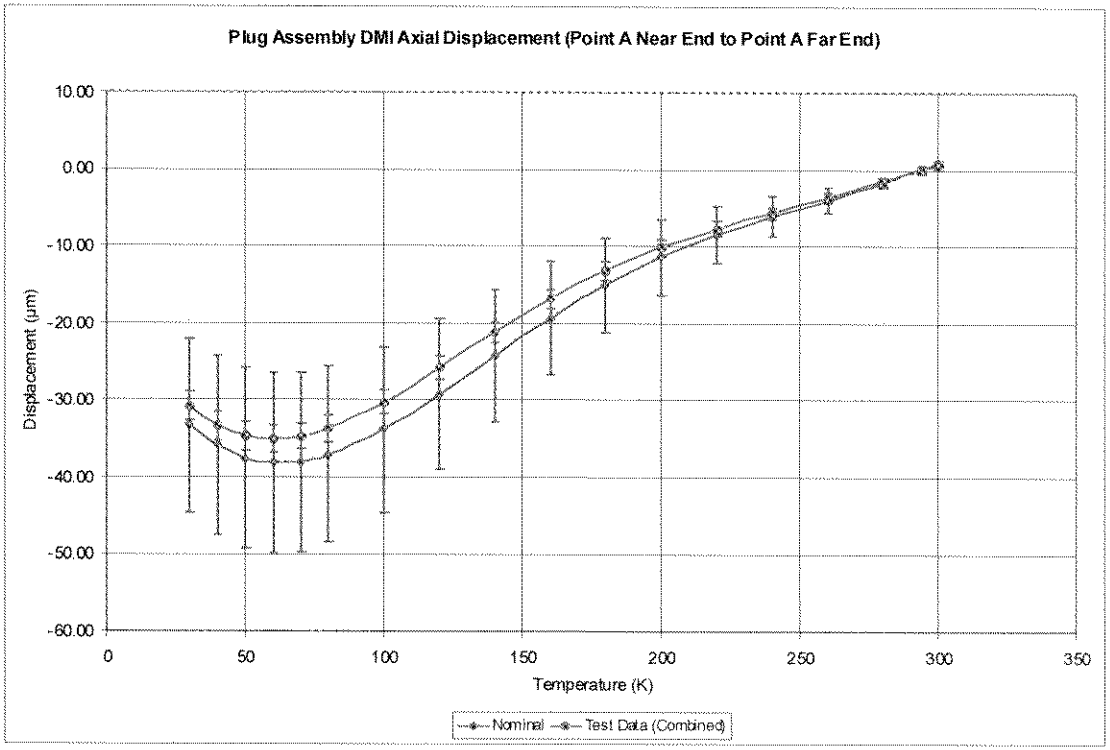

Subassembly Thermal Distortion Test

- A 3-D frame structure, the "breadbox", representative of a subassembly from the ISIM Structure and consisting of all the basic joint types was also designed, manufactured, and tested using the lessons learned and approaches developed during the basic joint level testing.
- Subassembly thermal distortion test characterized cooldown and cryogenic stability:
  - Out-of-plane distortion between instrument interface saddles (Targets 1-6)
  - In-plane distortion between instrument interface saddles (Targets A-C)
- Test article was cooled from room temperature to cryogenic operating temperature (~40 K) in NASA MSFC XRCF facility and distortions were characterized via interferometers.
- Test measurements were compared with analytical predictions to continue incremental validation of modeling and analysis approach.

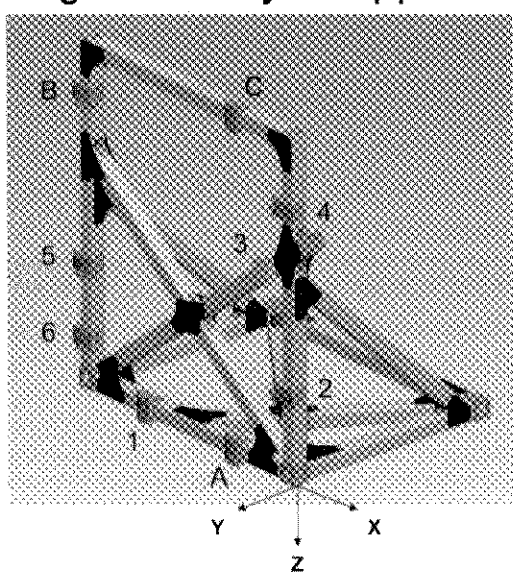

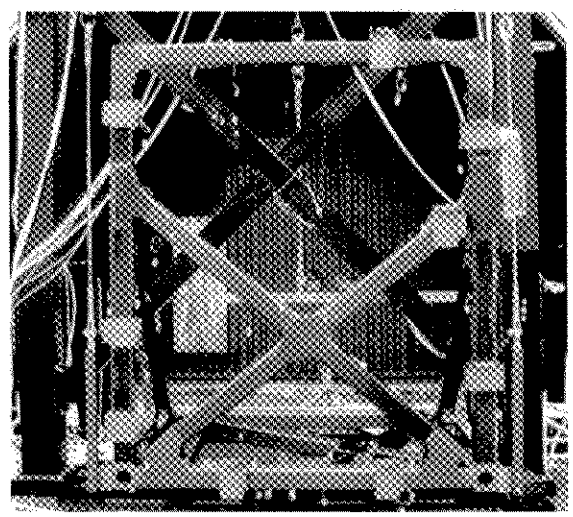

Subassembly Model Validation

- Thermal distortion model of the breadbox was generated using the same mesh as the basic joint test articles.
- Compared measured and predicted out-of-plane (piston = Y) and in-plane (X,Z) cooldown distortions to validate modeling and analysis approach.
- Model validation successful:
  - Nominal model prediction multiplied by the nominal model uncertainty factor of 1.6 bounds the test measurement.
  - Stochastic model predictions envelop the test measurements including measurement uncertainty.

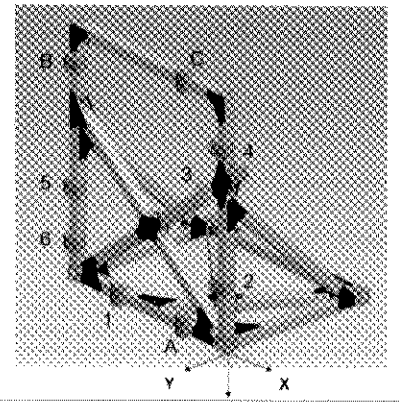

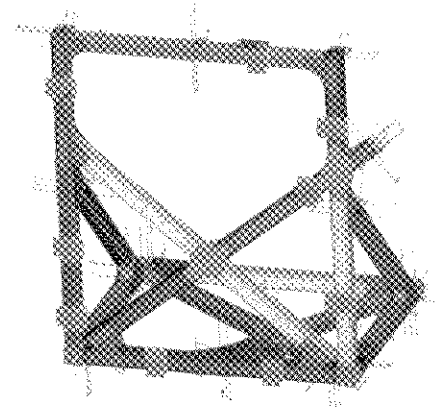

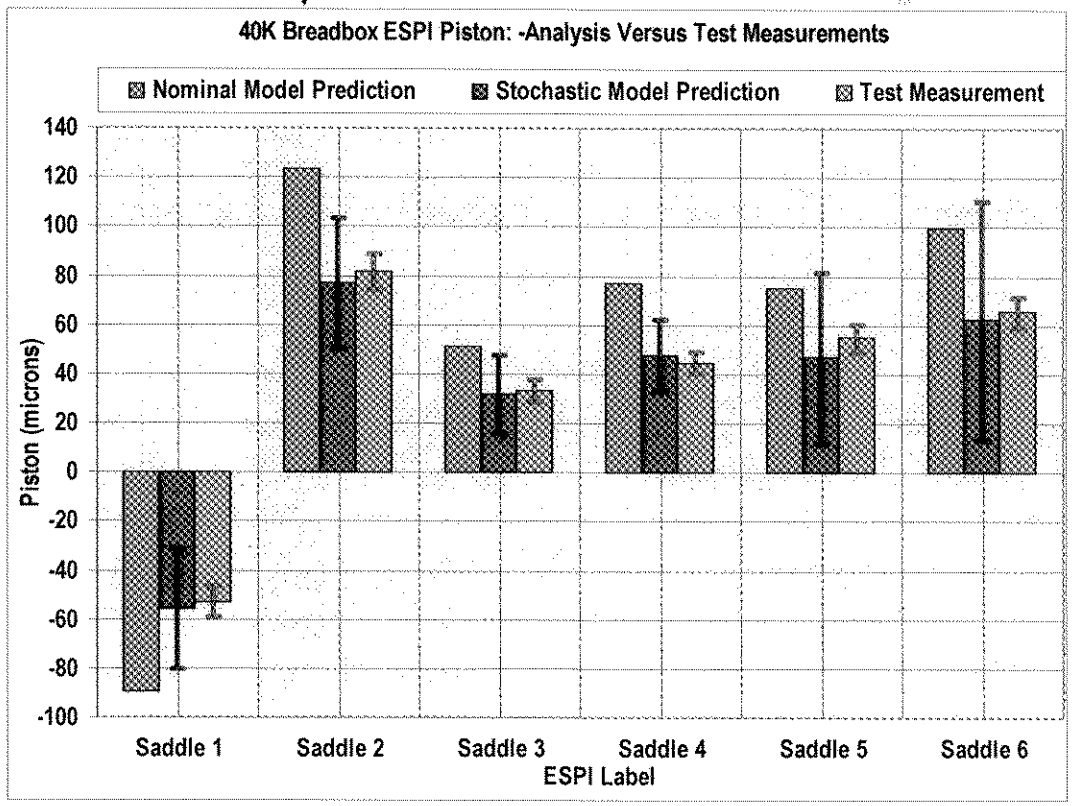

Flight ISIM Structure Cryoset Thermal Distortion Test

- The flight ISIM Structure successfully completed a cryogenic thermal distortion performance test in Spring 2010 in the Space Environment Simulator (SES) facility at NASA GSFC.
- Structure cooled from ambient to cryogenic temperature (~30 K).
- Distortions characterized using custom photogrammetry system:
  - Measurements verified that performance meets optomechanical requirements
  - Additionally, measurements used for final thermal distortion model validation

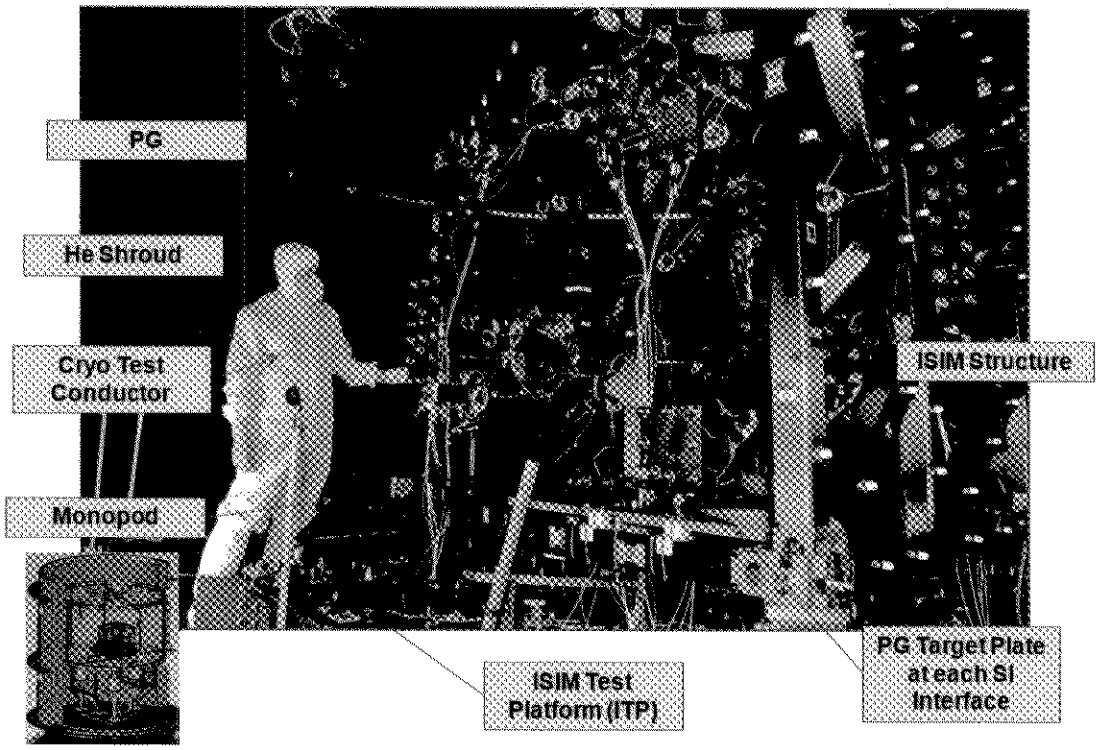

Cryoset Test Modeling and Analysis

- Detailed model of the ISIM Structure Cryoset test setup was generated to predict thermal distortion performance:
  - Flight hardware (bare ISIM Structure)
  - Mechanical ground support equipment (MGSE)
- ISIM Structure Model:
  - Bare flight structure model with the addition of metrology tooling and targets
  - Flight structure modeled using the validated mesh from the preliminary model validation studies

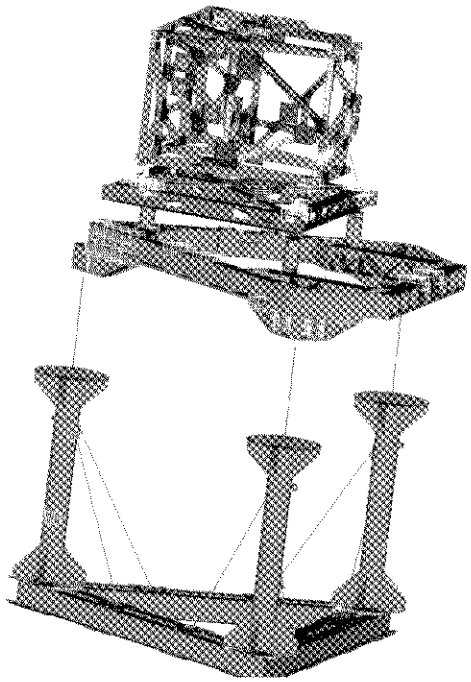

Cryo Set Test
ISIM Structure FEM

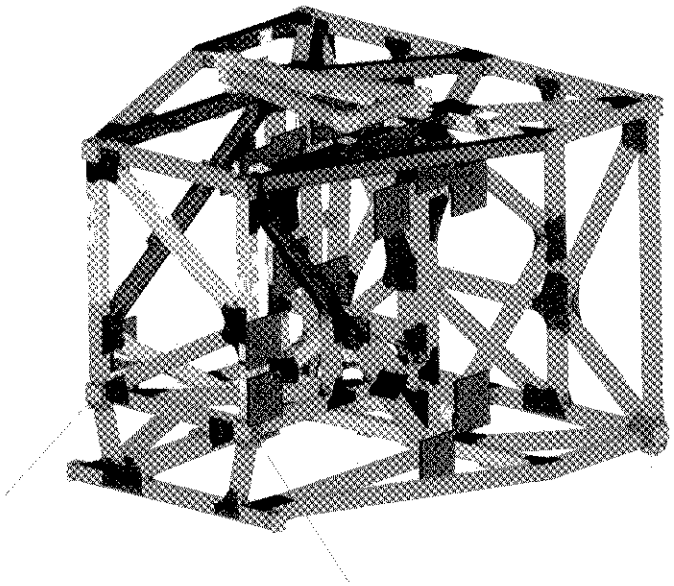

Cryoset Test Modeling and Analysis - cont

- Temperature sensor measurements taken during the test were used to generate temperature maps for the flight hardware and MGSE following the test.
- The average temperature of the flight ISIM Structure under test was 38 K with a 25 K gradient.

Cryoset Test FEM Temperature Map

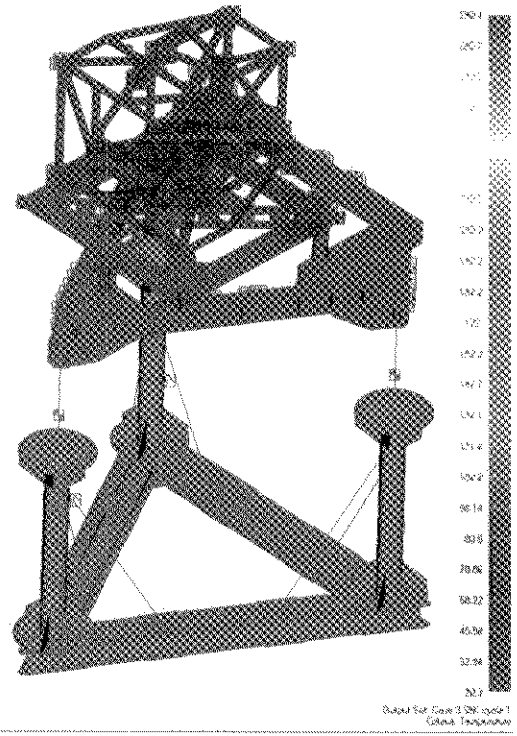

ISIM Structure + IATF Test FEM Temperature Map

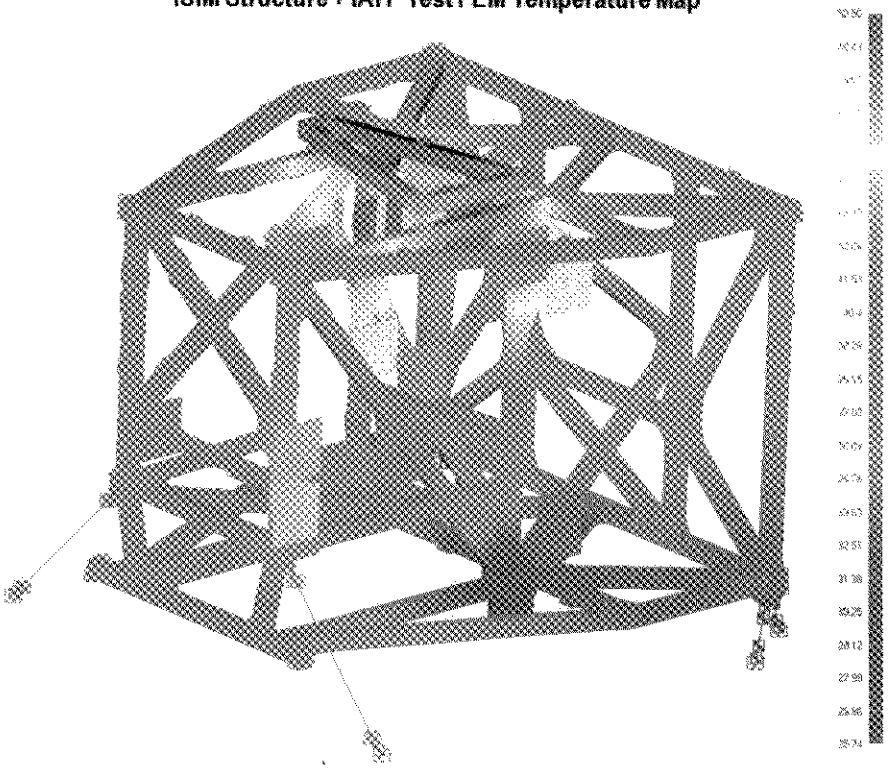

Flight Structure Model Validation

- Compared measured and predicted performance for rigid body motion of ISIM Structure on kinematic mounts (BCG to ACG motions).
- Nominal/mean motions for BCG-to-ACG show excellent agreement with measurements (Translations agree to within 50 microns).
- Model validation criteria satisfied:
  - Nominal predictions with MUF=1.6 bound the measured performance
  - Stochastic model predictions including 2-sigma uncertainty bandwidth with MUF=1.4 envelop measured performance

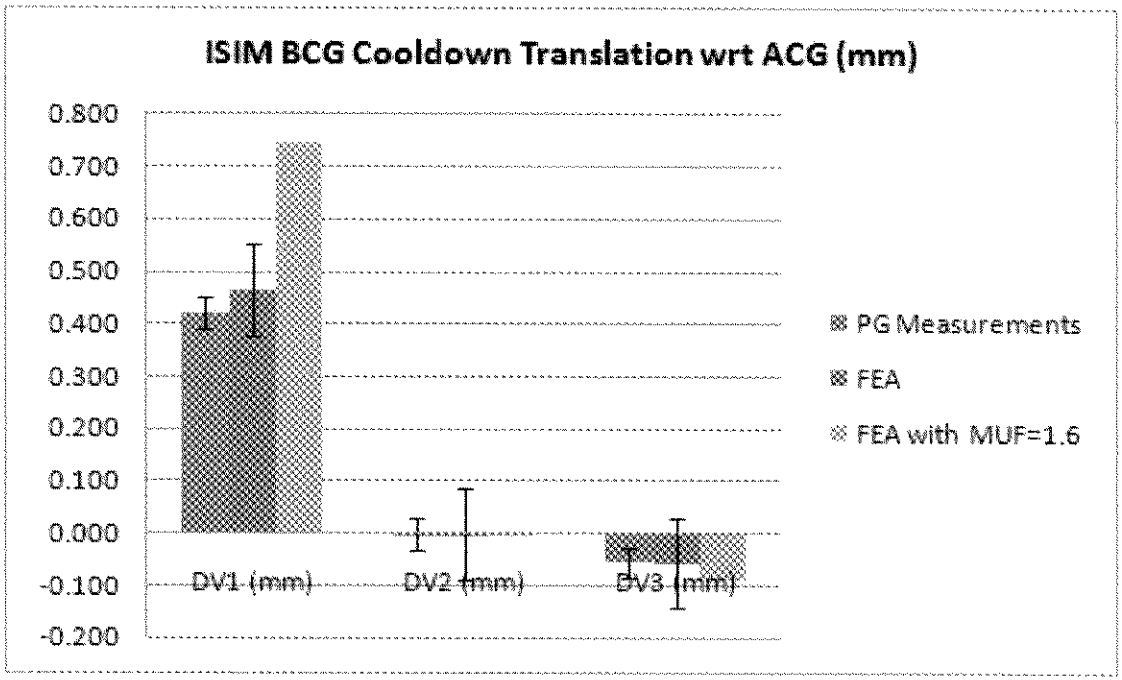

Flight Structure Model Validation – cont.

- Compared measured and predicted performance for internal distortion of ISIM Structure (science instrument interface to BCG motions).
- Example shown below for seven (out of nineteen) of the science instrument interfaces for out-of-plane (V2) and in-plane (V3) translations with respect to reference BCG.
- Model validation criteria satisfied:
  - Nominal predictions with MUF=1.6 bound the measured performance
  - Stochastic model predictions including 2-sigma uncertainty bandwidth with MUF=1.4 envelop or overlap measured performance

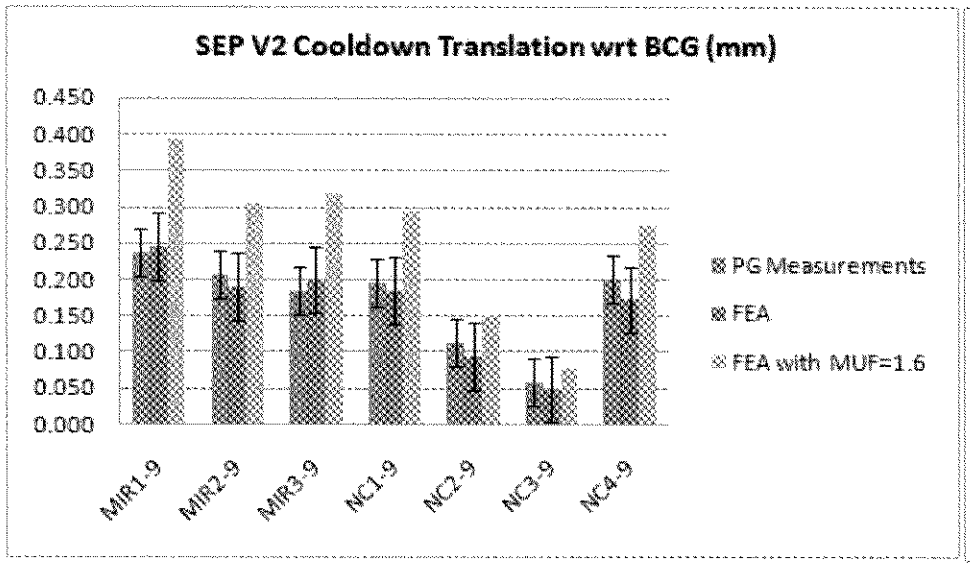

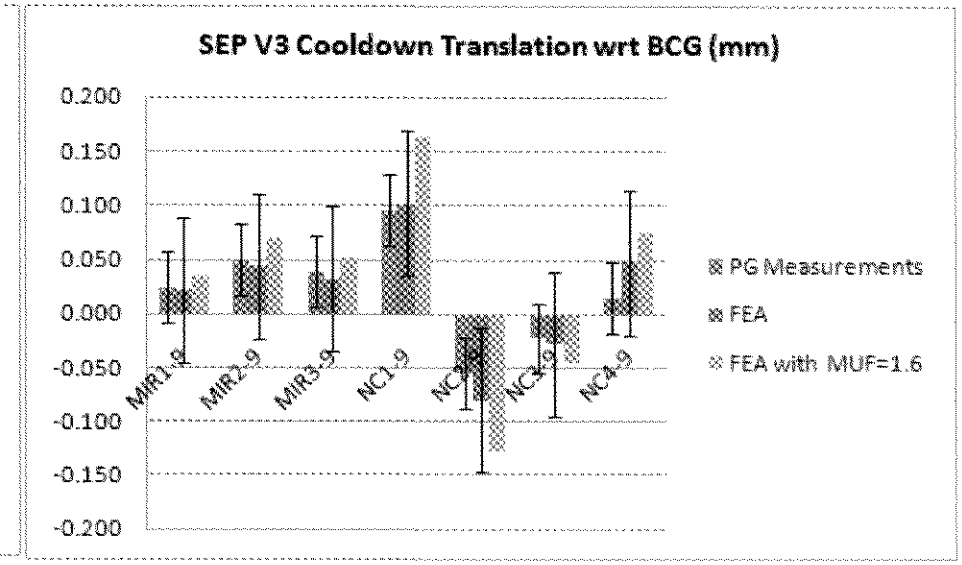

Flight Structure Model Validation – cont.

- Compared measured and predicted performance for internal distortion of ISIM Structure (science instrument interface to BCG motions).
- Table below provides values for measured and predicted cooldown translations in the V1, V2, V3 directions at all nineteen interface locations.
  - In all cases, the measured performance meets requirements.
  - Maximum cooldown motions are on the order of 200 microns.
- Significant motions were defined as translation greater than the 3-sigma photogrammetry error bar of 50 microns (see values in bold in the table). For significant motions, the nominal model predictions without modeling uncertainty factor agree with test measurements to within 50 microns.

Node	FEM Node Name	PG TGT Name	PG Measurements[1] (Cycle 2, 39 K - Ambient)			FEA w/o No MUF[2]			FEA with MUF=1.0[3]			Difference (PG - FEA w/o MUF)		
			ΔV1 (mm)	ΔV2 (mm)	ΔV3 (mm)	ΔV1 (mm)	ΔV2 (mm)	ΔV3 (mm)	ΔV1 (mm)	ΔV2 (mm)	ΔV3 (mm)	ΔV1 (mm)	ΔV2 (mm)	ΔV3 (mm)
13138	MR1-9	MR1-9	[illegible]	[illegible]	[illegible]	[illegible]	[illegible]	[illegible]	[illegible]	[illegible]	[illegible]			
13128	MR2-9	MR2-9	[illegible]	[illegible]	[illegible]	[illegible]	[illegible]	[illegible]	[illegible]	[illegible]	[illegible]			
13118	MR3-9	MR3-9	[illegible]	[illegible]	[illegible]	[illegible]	[illegible]	[illegible]	[illegible]	[illegible]	[illegible]			
13119	MC1-9	MC1-9	[illegible]	[illegible]	[illegible]	[illegible]	[illegible]	[illegible]	[illegible]	[illegible]	[illegible]			
13129	MC2-9	MC2-9	[illegible]	[illegible]	[illegible]	[illegible]	[illegible]	[illegible]	[illegible]	[illegible]	[illegible]			
13239	MC3-9	MC3-9	[illegible]	[illegible]	[illegible]	[illegible]	[illegible]	[illegible]	[illegible]	[illegible]	[illegible]			
13249	MC4-9	MC4-9	[illegible]	[illegible]	[illegible]	[illegible]	[illegible]	[illegible]	[illegible]	[illegible]	[illegible]			
13319	MS1-9	MS1-9	[illegible]	[illegible]	[illegible]	[illegible]	[illegible]	[illegible]	[illegible]	[illegible]	[illegible]			
13329	MS2-9	MS2-9	[illegible]	[illegible]	[illegible]	[illegible]	[illegible]	[illegible]	[illegible]	[illegible]	[illegible]			
13339	MS3-9	MS3-9	[illegible]	[illegible]	[illegible]	[illegible]	[illegible]	[illegible]	[illegible]	[illegible]	[illegible]			
13349	MS4-9	MS4-9	[illegible]	[illegible]	[illegible]	[illegible]	[illegible]	[illegible]	[illegible]	[illegible]	[illegible]			
13359	MS5-9	MS5-9	[illegible]	[illegible]	[illegible]	[illegible]	[illegible]	[illegible]	[illegible]	[illegible]	[illegible]			
13369	MS6-9	MS6-9	[illegible]	[illegible]	[illegible]	[illegible]	[illegible]	[illegible]	[illegible]	[illegible]	[illegible]			
13419	FS51-9	FS51-9	[illegible]	[illegible]	[illegible]	[illegible]	[illegible]	[illegible]	[illegible]	[illegible]	[illegible]			
13429	FS52-9	FS52-9	[illegible]	[illegible]	[illegible]	[illegible]	[illegible]	[illegible]	[illegible]	[illegible]	[illegible]			
13439	FS53-9	FS53-9	[illegible]	[illegible]	[illegible]	[illegible]	[illegible]	[illegible]	[illegible]	[illegible]	[illegible]			
13449	FS54-9	FS54-9	[illegible]	[illegible]	[illegible]	[illegible]	[illegible]	[illegible]	[illegible]	[illegible]	[illegible]			
13459	FS55-9	FS55-9	[illegible]	[illegible]	[illegible]	[illegible]	[illegible]	[illegible]	[illegible]	[illegible]	[illegible]			
13469	FS56-9	FS56-9	[illegible]	[illegible]	[illegible]	[illegible]	[illegible]	[illegible]	[illegible]	[illegible]	[illegible]			
		max	0.1499	0.2368	0.1457	0.1506	0.2060	0.1650			max	0.031	0.029	0.039
		min	-0.0566	-0.2120	-0.1031	-0.0600	-0.2026	-0.1109			min	-0.024	-0.046	-0.105
											RMS	0.016	0.017	0.017

Summary

- The development and validation of a thermal distortion modeling and analysis capability for the JWST ISIM Structure was successfully completed.
- The modeling and analysis approach was grounded in initial constituent materials testing and benchmarked to test results at the composite bonded joint, subassembly, and full-scale flight hardware levels.
- Comparison of analysis predictions and test results from this series of incremental cryogenic thermal distortion tests demonstrates that the model validation goals are achieved.
- Status and future plans:
  - The ISIM Structure is currently completing ambient verification testing:
    - Modal survey test for dynamic model validation
    - High capacity centrifuge and static pull testing for ambient strength verification
  - Once the science instruments are integrated to the ISIM Structure, an ISIM Element level Cryovac test will be performed to characterize optical and thermal performance at cryogenic operating temperatures.
  - At the JWST level, a final cryo thermal vacuum test of the combined ISIM and OTE (telescope) system will be performed to characterize optical and thermal performance for the observatory.