# DESIGN, DEVELOPMENT AND TESTING OF THE GMI LAUNCH LOCKS

**Adam Sexton[(1)], Chris Dayton[(1)], Ron Wendland[(1)]**
**Joseph Pellicciotti[(2)]**

*[(1)]Ball Aerospace, 1600 Commerce St. Boulder CO 80301, asexton@ball.com, cdayton@ball.com, rwendlan@ball.com*
*[(2)]NASA NESC - NASA GSFC 8800 Greenbelt Rd. Greenbelt, MD 20771 USA: Joseph.W.Pellicciotti@nasa.gov*

## ABSTRACT

Ball Aerospace will deliver the GPM Microwave Imager (GMI), to NASA as one of the 3 instruments to fly on the Global Precipitation Measurement (GPM) mission, for launch in 2013. The radiometer, when deployed, is over 8 feet tall and rotates at 32 revolutions per minute (RPM) can be described as a collection of mechanisms working to achieve its scientific objectives. This collection precisely positions a 1.2 meter reflector to a 48.5 degree off nadir angle while rotating, transferring electrical power and signals to and from the RF receivers, despins two very stable calibration sources, and provides the structural integrity of all the components. There are a total of 7 launch restraints coupling across the moving and stationary elements of the structure,. Getting from design to integration will be the focus of this paper.

## 1. GMI INSTRUMENT ARCHITECTURE

Fig. 1 shows the architecture of the GMI instrument. The Instrument Support Structure (ISS) deck consists of a composite panel that contains the interface to the spacecraft, supports the instrument computer and provides the structure to support the stowed main reflector. The Instrument Bay Assembly (IBA) consists of a hexagonal composite structure with a circular top deck that supports the RF subsystem and the Reflector Deployment Assembly (RDA). The calibration targets are supported on a calibration support structure that is despun and connected back through the stator assembly of the Spin Motor Assembly which provides the rotational motion and allows for power and signal transfer between the rotating and stationary elements. The primary connection between the two composite structures is the Spin Mechanism Assembly (SMA) and the IBS Launch Restraints (IBS LR). The 3 IBS LR's act as a load bypass mechanism for the bearings contained within the SMA and provide a direct load path for the supported mass into the spacecraft interface. Actuation of the IBS LR's allows the SMA to spin the rotating elements. The Main Reflector Launch Restraints (MR LR) provide the stowed interface for the Main Reflector providing a load path through the composite structure to the spacecraft interface. The Main Reflector is positioned to its deployed orientation by the Reflector Deployment Assembly after the launch restraints are released. The deployed orientation can be seen in Fig. 2. The calibration targets are connected to the stator elements of the SMA through a bellows that couples the slip ring on the SMA to the Despin Assembly which supports the calibration assembly and holds the calibration assembly stationary. This calibration support structure contains the Calibration Launch Restraint (CAL LR) which provides an alternate load path to support the mass of the calibration targets without over loading the Despin Assembly.

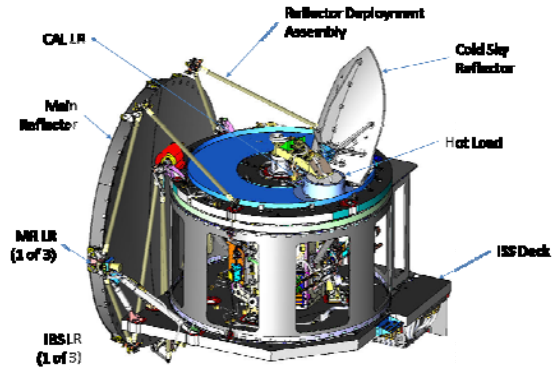


*Figure 1: Stowed Configuration of GMI*

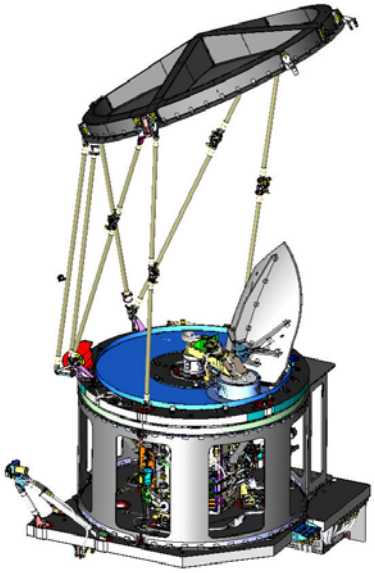

*Figure 2: Deployed Configuration of GMI*

## 2. IBS LAUNCH RESTRAINTS (IBS LR)

These three (3) launch restraints provide an alternate load path to the SMA which prevents an overloading the bearings in that mechanism while also providing the structural stiffness required to meet the overall frequency requirements of the structure. Fig. 3 shows a typical location.

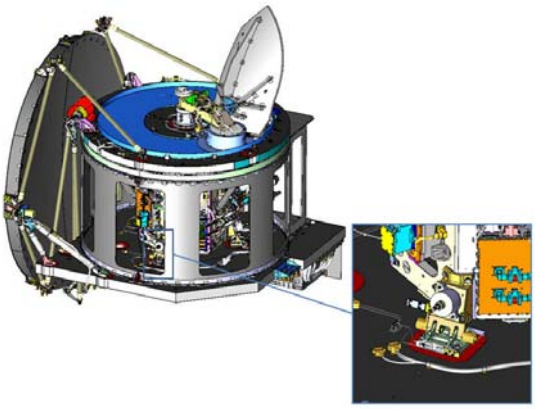

*Figure 3:Typical IBS LR Location*

### 2.1 IBS Launch Restraint Design Drivers

The design drivers on the IBS LR's are reduced to a small set of primary driving elements.

- High Load carrying capability (Requiring a release mechanism with high preload carrying capacity)
- Maximum rotation from the stowed to deployed orientation
- Low pyroshock source requirements
- Ease of integration and reassembly after actuation

Fig. 4 and Fig. 5 show the cross section of the IBS LR in the stowed and deployed orientations. The fixed elements of the IBS LR consist of a fixed base bracket that interfaces to the ISS deck and supports a rotating member that carries the release mechanism from the stowed to deployed position. This motion is powered by two torsion springs supported on either side of the base bracket, supported on axles that pass thru bushings pressed into both the fixed base bracket and the rotating element. The base bracket has a reed switch attached to it that provides telemetry on the deployment status of the launch restraint. The triggering magnet is attached to the rotating bracket which rotates close to the switch, closing the circuit. This approach to providing telemetry was used across all of the launch restraints. Plunger springs are incorporated into the rotating bracket to assist with initial cup/cone separation. To minimize lateral freedom in the mechanism shims were placed on either side of the tangs in the fixed base bracket to minimize the gap to the rotating bracket, without binding the motion.

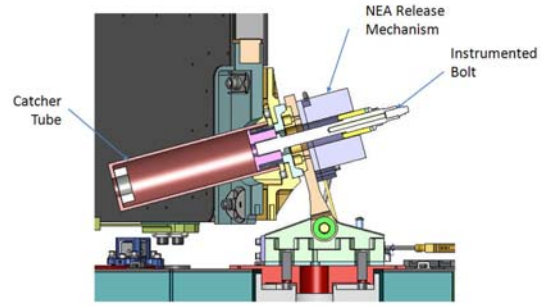


*Figure 4: IBS LR Cross Section - Stowed*

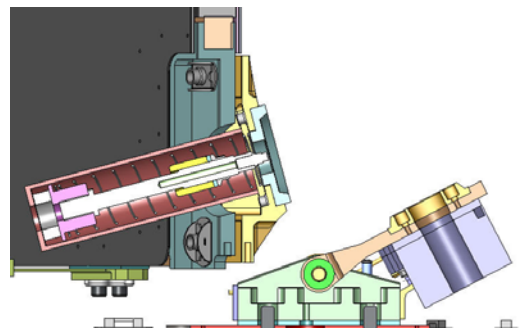

*Figure 5: IBS LR Cross Section – Deployed*

On the rotating elements of the launch restraint is the shear cup along with the catcher tube, extension spring, and an instrumented bolt. The instrumented bolt allows for direct measurement of the preload in the cup/cone interface which is critical to the success of the launch restraint providing the correct structural behavior. This bolt is preloaded to 7500 lbs (33 kN) and this load is reacted and released by a mechanism provided by NEA Electronics. This "split spool" mechanism allows the preload to be released upon command, generating a low pyroshock signature while the bolt is pulled into the catcher tube. The bolt and the release mechanism release rod had flats machined into them to allow a tool to span across them and prevent the transmission of the torque on the nut into the release rod and to prevent the bolt from free spinning while being preloaded. When the bolt is released it impacts into a silicone "bumper" that is used to protect the housings and prevents the shock generated from the collisions between the bolt and the catcher tube. Previously, Poron has been utilized, but it could not survive the thermal extremes and a honeycomb crushable was not desirable. Development testing showed that the silicone could tolerate the temperature extremes (+/-80C – driven by the MR LR) and sustain loading at those temperatures.

The extraction spring used in this design was balanced against the torsion springs such that it could overcome the torsion springs should the bolt hang up during actuation, trying to close the joint so that the bolt could have a clear path. The kinematics of the bolt moving relative to the rotating bracket was simulated and was a

point of discussion through the design evolution of the launch lock.

### 2.2 IBS LR Development Testing

The IBS LR system will be qualified during the GMI environmental testing, however, risk reduction testing was performed to validate analytical and design details consisting of vibration and thermal vacuum tests. Each of these tests exposed details with the design that required attention and some modifications to the hardware prior to instrument delivery.

#### 2.2.1 Vibration Testing

The test configuration for the vibration testing consisted of an instrument simulator to expose the launch restraints to the correct loads, as seen in Fig. 6. A static SMA was designed with the correct bending stiffness to simulate the flight SMA.

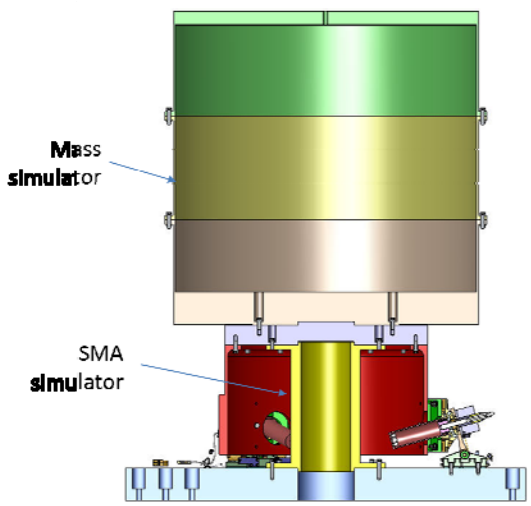


*Figure 6: Cross Section*

Our test sequence for testing involved an actuation of the launch locks prior to vibration testing and then an actuation after exposure to the vibration environment. Pyroshock was a concern due to the proximity of RF units, and this risk reduction testing allowed the instrumentation of the "stationary" and "rotating" sides of the interface to measure the near field shock signatures, which was done for all testing done with flight actuators. The pre-vibe actuations went smoothly, with the exception of the tooling used for the bolt preloading. The instrumented bolt was configured with a connector on the tip, providing an instrumentation interface to measure the load in the bolt, and as an interface for an extraction tool. Fig. 7 shows the configuration of the installed bolt and the NEA in the test configuration and Fig. 8 shows the result of the preloading operation with our initial tool design. The solder joint between the connector and the bolt had failed due to the loads being exerted from the tool in an attempt to provide anti-rotation clamping while applying torque.

After completing the first axis of vibration testing we found that the 1st mode of the test configuration shifted, dropping by 10 Hz. The first mode responses for the 2nd and 3rd axis of testing were consistent and the actuations performed after the vibration testing went flawlessly. The first mode shift was caused by a settling in the hardware and the small but practical clearances in the rotating hardware of the launch restraints.

The kinematics of the design had been topic of discussion among the design and analysis team: "Which would happen more quickly, the bolt translating into the catcher tube or the rotation of the bracket to its position against the hardstops?" The actuations of the launch locks were filmed using high-speed photography and we were able to capture the details of the deployment. In Fig. 9, a high speed video picture frame, you can see the launch restraint prior to the actuation and Fig. 10 shows that there is a separation of the cup/cone and that the restraint rod element of the NEA is still translating into the catcher tube.

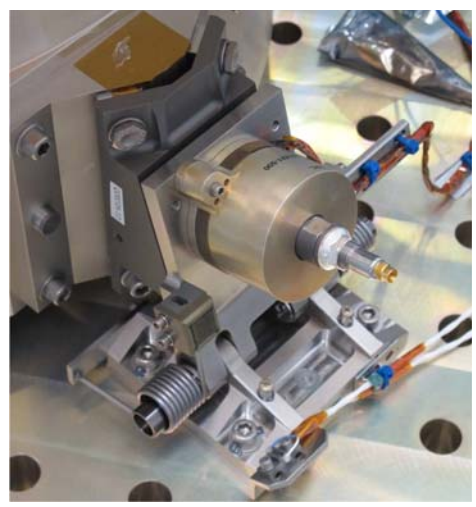

*Figure 7: IBS LR vibration testing*

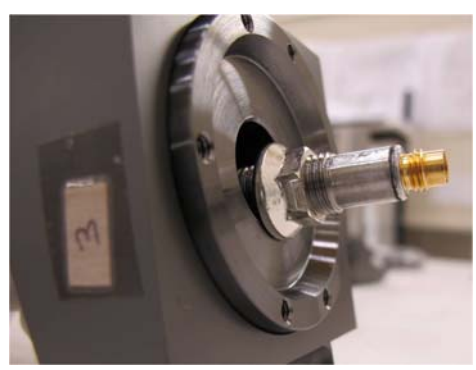

*Figure 8: Cracked Solder Joint*

*Figure 9: Pre Actuation*

*Figure 10: During Actuation*

### 2.2.2 Thermal/Vacuum Testing

One of the three launch locks was configured for the thermal testing, seen in Fig 11. This testing was performed in conjunction with the thermal vacuum testing for the CAL LR, whose design and test sequence is covered in section 3. The thermal vacuum testing consisted of an actuation at the hot and cold extremes of the predicted environment (+45C, -40C) after exposing the hardware to survival temperatures (+55C, -50C).

During the hot actuation of the launch restraint we were not able to show positive telemetry on the reed switch. An evaluation of the switches that had not been exposed to the thermal environment exposed one additionally damaged switch. Thermal cycling on the reed switches was independently performed to eliminate any material behavior as the root cause of the switch failure.

After the thermal cycling was completed it was found that the bodies were being exposed to excessive loads during integration activities and handling. The solution involved additional staking of the wires to the support body to prevent transmission of the handling loads.

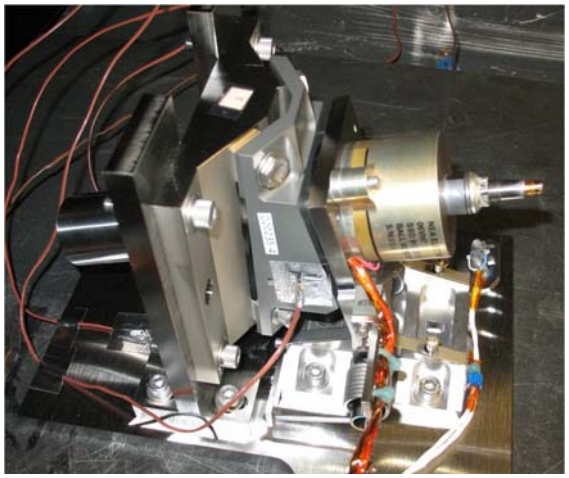

*Figure 11: TVAC Configuration*

## 3. CALIBRATION LAUNCH RESTRAINT (CAL LR)

The calibration launch restraint, see Fig. 12, is designed to provided a load bypass for the despin mechanism in supporting the mass and inertia of the two calibration targets, the Cold Sky Reflector and the Hot Load. The overall design approach is very similar in nature to the IBS LR.

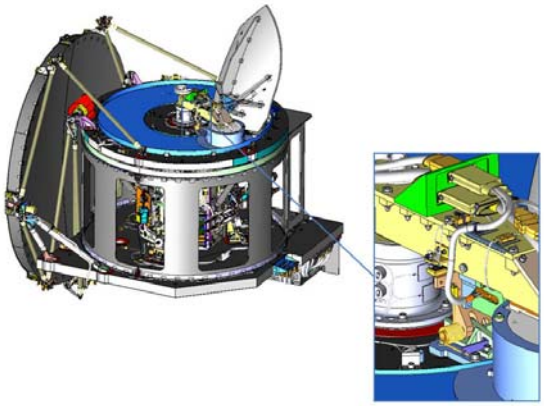

*Figure 12: Cal LR Location*

### 3.1 CAL LR Design Drivers

Similar to the IBS LR it was necessary to package a robust mechanism in a small envelope. The primary design drivers for the Cal LR were:

- Low Pyroshock
- Overall Stiffness of the Calibration support structure
- Maximize clearances between stationary and rotating interfaces
- Ease of integration pre and post actuation

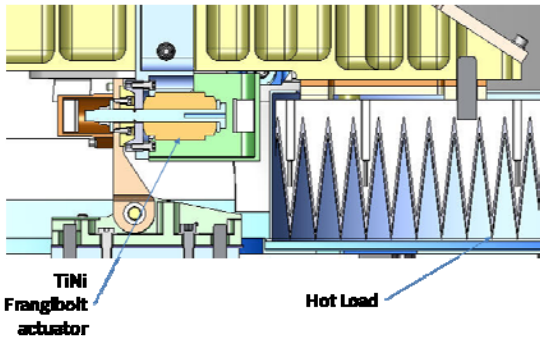


*Figure 13: Stowed Configuration of CAL LR*

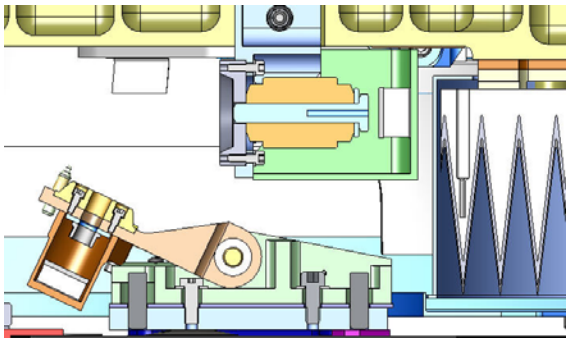

*Figure 14: Deployed Configuration of CAL LR*

Fig. 13 and 14 show the stowed and deployed cross section of the CAL LR, showing that it is functionally similar to the IBS LR, with the main difference being the choice of release mechanism. The CAL LR could not support the large catcher tube envelope that the IBS LR had and a TiNi Aerospace Frangibolt was utilized for this location. The tradeoff for the smaller envelope was the higher self generated shock signature associated with the Frangibolt. The bolt is strained to failure and is broken into two smaller parts, so the catcher tube required for this application is significantly smaller, which allows for a large rotation. The remaining structural components and material choices follow the design philosophy developed for the IBS LR.

### 3.1 CAL LR Development Testing

The Cal LR will be qualified at the GMI instrument assembly similar to the IBS LR and risk reduction testing was performed to validate the design prior to integration onto the instrument.

### 3.2.1 Vibration Testing - Part 1

Fig. 15 shows the configuration of the CAL LR vibration test; including the flight despin assembly and the flight calibration targets. After a successful pre environmental actuation, vibration testing started in the Z-axis. As vibration levels stepped up during Random Vibration an acoustic signature developed that caused concern and testing was stopped. The cause of the noise was investigated and theorized to either be stray hardware in the vibration table, an amplification of noise being transmitted from the despin mechanism through the calibration arm and out of the hot load, with the hot load acting as a speaker. The test article was removed from the vibration table, and while there was some hardware found trapped within the vibration shaker this did not account for the amount of noise being generated. After a detailed visual exam showed no cause or sign of a pending failure, testing continued.

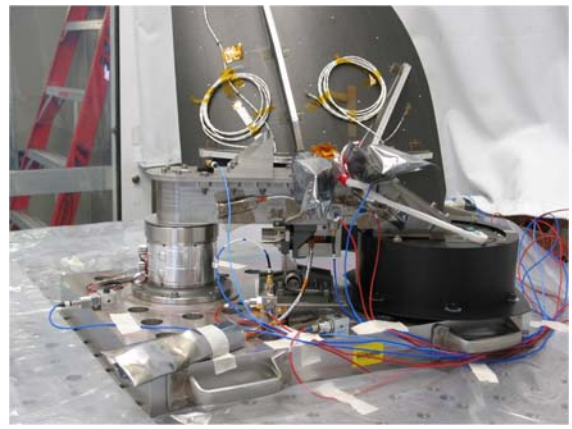

*Figure 15: CAL LR – First Vibration Configuration*

Disassembly of the calibration structure, despin assembly and calibration launch lock showed some interesting features. The launch restraint shims showed significant built up of molybdenum disulfide and some scoring on the axles, however there was no sign of structural deformation. The calibration arm itself showed no signs of any degradation and this was confirmed by a comparison to the original dimensional inspection. The flat surfaces of the cup/cone interface looked good as well.

Disassembly of the despin assembly showed considerable debris generation and after the bearings were removed it was found that there was significant debris being deposited into the bearings. This was an unacceptable condition for this mechanism as it had to rotate with the instrument for over 54 million cycles on orbit.

### 3.2.2 Thermal/Vacuum Testing

Fig. 16 shows the CAL LR in the thermal vacuum chamber and this testing was done with a despin surrogate that would tolerate the dimensional changes in the support plate through the temperature extremes that it was exposed to (-50 to +55 C survival, -40 to +45 Operational). The calibration loads were removed to minimize the 1g loading affects that could result in side loads in the cup/cone interface that would generate kick loads that may “help” with separation. The actuations of the CAL LR at the hot and cold extremes went smoothly and did not have the same issues with the reed switch that the IBS LR had, even though they were in the same test set up.

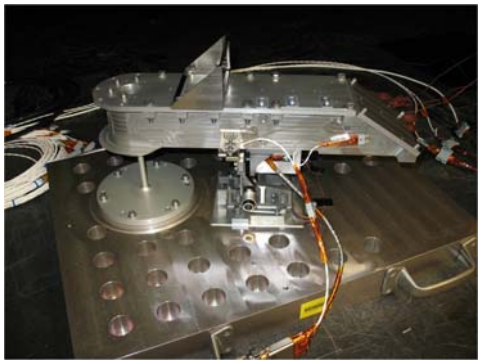

*Figure 16: CAL LR – Thermal/Vacuum Testing*

It was noticed though after one of the actuations that the motion of the CAL LR was being retarded towards end of travel. There was sufficient torque in the springs to drive the bracket from the stowed to deployed position, but if the bracket was rotated back off the hardstops by 10 or 20 degrees there was sufficient drag torque to prevent the bracket from returning to the hardstops, see Fig. 20. Since there was sufficient margin to allow successful actuation the final actuation at temperature was performed and then the launch lock was returned for post thermal inspection. The amount of molybdenum disulfide on the shims was found to be sufficient to create a wedge of material that may have been retarding deployment. The shims were cleaned and the LR reassembled in preparation for additional vibration testing to test the modified despin assembly.

### 3.2.3 Vibration Testing - Part 2

The Calibration LR was assembled in a flight configuration and is seen in Fig 14. The difference in this test configuration versus the initial one is the removal of the flight hot load and the use of the second flight Cold Sky Reflector. The acoustic signature of this test was different than the first, but because of the change in hardware components it was unclear whether this was a function of the redesign or the fact that that flight hot load was not present. After the vibration testing, the hardware was disassembled and all the hardware was examined. The first thing that was noticed was two sets of lubrication wear marks on the cup/cone interfaces.

*Figure 17: CAL LR – Vibe Testing – round 2*

Fig. 18 and 19 shows the marks that were found after the disassembly. After looking at the cup/cone more closely a polyester fiber was found on the cone that clocked 180 degrees from the wear marks found on the angled surface of the cup/cone. After further investigation into the potential cause of the marks found on the flats of the cones, there was not foreign object trapped to create such a feature. Inspection of the flats did find mating concave/convex features

.

*Figure 18: Stray fiber causes lube wear*

*Figure 19: Lube wear on shear cup caused by fiber 180 degrees opposed*

*Figure 20: Inability to drive to hard stop*

The disassembly of the CAL LR also showed that the shims used for lateral spacing had some galling to the rotational bracket. It was determined that the lateral

loads introduced here were sufficient to generate galling between the 303 shims and the Titanium brackets. This finding resulted in a material change and application of dry lubricant to the shims to mitigate the potential for galling. The similarity in design between the IBS and CAL forced an evaluation of the IBS. Galling may have occurred on a much smaller level, as the signs were not as extensive – due to the multiple load paths for the IBS LR versus the CAL LR.

## 4. MAIN REFLECTOR LAUNCH RESTRAINTS (MR LR)

The Main Reflector Launch Restrains are utilized at three locations (3), see Fig. 21, around the Main Reflector, and unlike the IBS LR or the CAL LR they do not have to articulate after actuation. The Reflector Deployment Assembly (RDA) moves the Main Reflector from its stowed position to the deployed orientation.

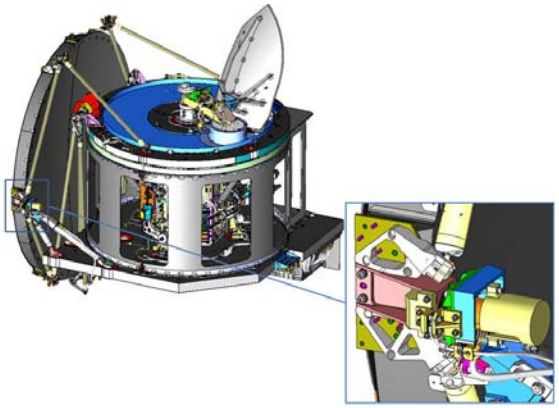

*Figure 21: Location of MR LR*

### 4.1 MR LR Design Drivers

The following factors were primary drivers in the design of the MR LR:

- Envelope Constraints
- Stowed first Mode of the Main Reflector (primarily structure)
- Moment Free

The MR LR utilizes a cup/cone interface for transmitting loads from the Main Reflector into the support structure. Fig. 22 shows a typical location of the Main Reflector stowed to the Main Reflector Launch Restraint support structure. The requirement that was a primary driver and the highest risk associated with the MR LR design was that the launch restraints must be moment free. With a cup/cone at the separation plane interface, it was necessary to incorporate a spherical bearing, as shown in Fig. 23.

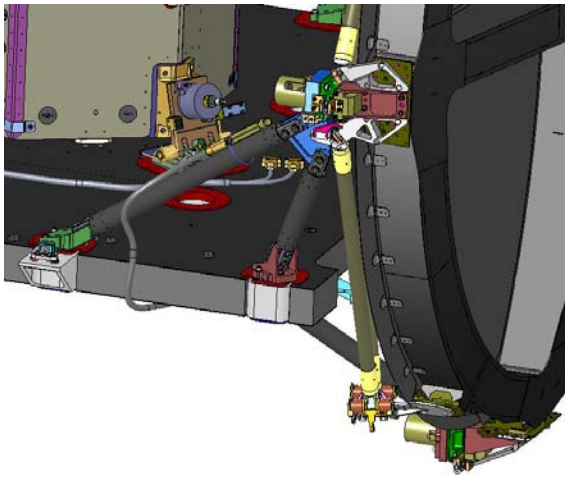

*Figure 22: Typical MR LR Design*

A split race spherical bearing was utilized to achieve the moment free requirement and was developed based on previous moment free designs at BATC.

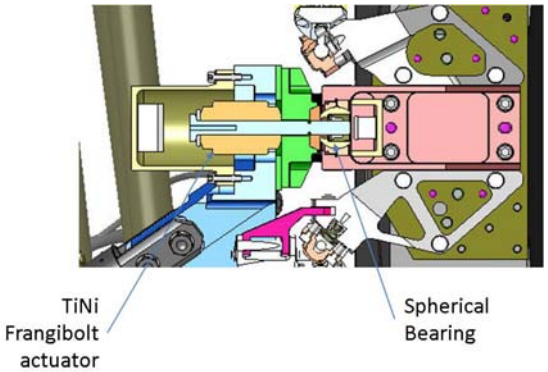


*Figure 23: Cross Section – MR LR Stowed*

This launch restraint utilized a TiNi Aerospace Frangibolt for the release mechanism to have the smallest amount of mass deployed along with the reflector when the launch restraints were actuated. To have sufficient margin with that type of actuator it is necessary to minimize the length of the bolt to be broken, which was complicated by the inclusion of the spherical bearing. There was sufficient heritage on the spherical bearing to have a producible design, but the packaging was slightly different than what had previously been done and it was necessary to refine the assembly procedure to achieve the requirements of having less than 4 in-lbs breakaway torque when assembled.

The risk associated with the spherical bearing approach, was that under vibration the bearing could either loose the preload that was applied through the races, or it could seize up and the breakaway torque would climb from the less than 4 in-lbs to hundreds of inch-lbs and impose unacceptable loading to the Main Reflector.

### 4.2 MR LR Development Testing

The full qualification of the MR LR system is done at the GMI instrument level and it was impractical to create structural simulators to try and develop a full test for the launch lock to demonstrate the separation of the cup/cone interface and so the testing focused on the behavior of the spherical bearing.

#### 4.2.1 Vibration Testing

A vibration test was designed that would load the spherical bearing to the correct load levels while also imposing the correct range of rotation within the bearing. The test was designed to expose the bearing to twice (2x) the rotational cycles it would be exposed do during instrument level (GMI), observatory level (GPM) testing and launch.

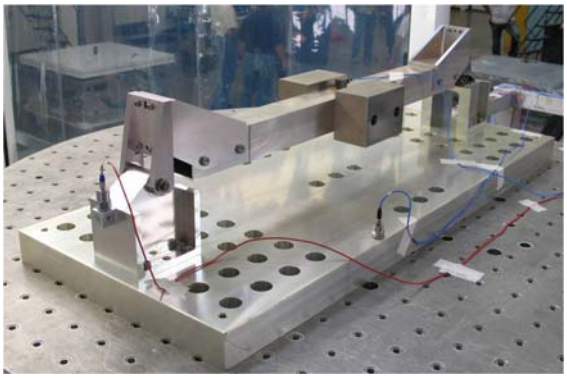

*Figure 24: MR LR Spherical bearing risk reduction vibration testing*

Fig. 24 shows the test configuration which was a lumped mass on a beam to generate the correct loads and deflections. We found during test set up that the breakaway torque in the spherical bearing had dropped from its initial value – but was still greater than zero, which was our self-imposed criterion for a good joint. Our two success criteria were for a good overlay of mode plots from the initial low level sine sweep to the last low level sine sweep and a low breakaway torque value after testing.

The testing was broken up into a series of small sections to prevent overheating of the configuration as the total test duration was in excess of 20 minutes. After each section a low-level sine sweep was performed and these overlaid very nicely in comparison to the initial sweep that was performed.

There was high confidence that we had validated the spherical bearing design until the breakaway torque was measured and it had gone up significantly from 1.5 in-lbs to 15 in-lbs. This increase, while significant in magnitude did not adversely affect the predicted load cases for the main reflector. The real mystery was why we had seen this increase in torque, which became apparent after disassembly

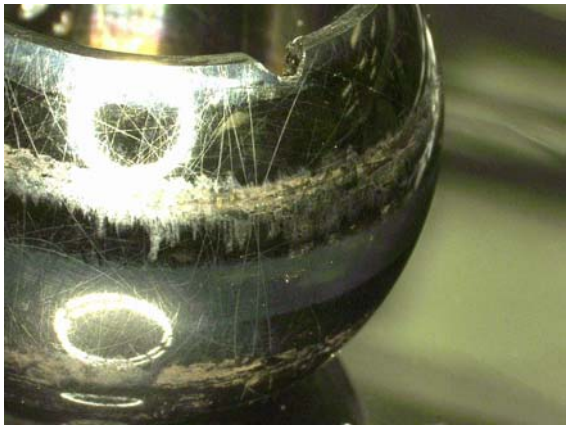

*Figure 25: Spherical Ball after vibe testing*

*Figure 26: Spherical Bearing race wear*

Fig. 25 shows an example of the wear and blistering that was found on the ball and race of the bearing utilized for the testing. The area of contact between the two races and the ball is evident and Fig. 26 shows a typical example of how the races wore. The blistering was a function of the local temperature that was generated during test and the inadequate period to allow cooling between test cycles. The results of this test showed that even at 2x life we would have sufficient lube present to prevent any adverse affects and that the design would meet its performance requirements. It was concluded that the lubricant wear that had driven the breakaway torques up.

## 5. CONCLUSIONS

The GMI launch restraints have progressed from design trades to tested and integrated hardware ready for instrument level testing. The success of this hardware would not be possible without the support of the Ball engineering and assembly personnel.

## 6. ACKNOWLEDGEMENTS

A special thanks to Sergey Krimchansky[(2)] of GSFC for his input over-seeing the technical work on GMI and in supporting the writing of this paper.