Reliability and Maintainability Analysis of a High Air Pressure Compressor Facility

Fayssal M. Safie, Ph.D. • NASA Marshall Space Flight Center • Huntsville, AL

Robert W. Ring • Bastion Technologies, Inc. • NASA Marshall Space Flight Center • Huntsville, AL

Stuart K. Cole, Ph.D., P.E. • NASA Langley Research Center • Hampton, VA

Key Words: Compressor Station, Reliability, Availability, Maintainability, Cost Analysis

SUMMARY & CONCLUSIONS

This paper discusses a Reliability, Availability, and Maintainability (RAM) independent assessment conducted to support the refurbishment of the Compressor Station at the NASA Langley Research Center (LaRC). The paper discusses the methodologies used by the assessment team to derive the repair by replacement (RR) strategies to improve the reliability and availability of the Compressor Station (Ref.1). This includes a RAPTOR simulation model that was used to generate the statistical data analysis needed to derive a 15-year investment plan to support the refurbishment of the facility. To summarize, study results clearly indicate that the air compressors are well past their design life. The major failures of Compressors indicate that significant latent failure causes are present. Given the occurrence of these high-cost failures following compressor overhauls, future major failures should be anticipated if compressors are not replaced. Given the results from the RR analysis, the study team recommended a compressor replacement strategy. Based on the data analysis, the RR strategy will lead to sustainable operations through significant improvements in reliability, availability, and the probability of meeting the air demand with acceptable investment cost that should translate, in the long run, into major cost savings. For example, the probability of meeting air demand improved from 79.7 percent for the Base Case to 97.3 percent. Expressed in terms of a reduction in the probability of failing to meet demand (1 in 5 days to 1 in 37 days), the improvement is about 700 percent. Similarly, compressor replacement improved the operational availability of the facility from 97.5 percent to 99.8 percent. Expressed in terms of a reduction in system unavailability (1 in 40 to 1 in 500), the improvement is better than 1000 percent (an order of magnitude improvement).

It is worthy to note that the methodologies, tools, and techniques used in the LaRC study can be used to evaluate similar high value equipment components and facilities. Also, lessons learned in data collection and maintenance practices derived from the observations, findings, and recommendations of the study are extremely important in the evaluation and sustainment of new compressor facilities.

1. BACKGROUND

The Langley Research Center's (LaRC) High Pressure, Air-Compressor Station provides high-pressure compressed air at relatively high daily volumes for use at approximately 25 research facilities around LaRC. The Compressor Station has been in continuous operation for over 60 years. Three of their six compressors currently in service have been operating since the early 1950's. Despite efforts to upgrade and refurbish the compressors, the Station continues to be challenged with frequent downing events, obsolete equipment, and aging infrastructure. Consequently, LaRC management requested NASA's Safety Center conduct an independent reliability and availability assessment of the Compressor Station and make recommendations for ensuring long-term sustainment of operations.

1.1 Assessment Tasks

The independent assessment was structured into three subtasks as follows:

Subtask 1: Assess System Reliability and Availability

- Review previous problems and failures, develop a failure database to quantify Station availability and make recommendations concerning data collection and trending.
- Quantify component availability as compared to new equipment.

Subtask 2: Assess New Equipment Alternatives

- Assess current state-of-the-art industrial systems available for a repair-by-replacement strategy for all major systems.

Subtask 3: Make Recommendations on Specific Questions

- Is it economically prudent to continue on the path of refurbishment and upgrading of the current suite of compressors, dryers, valves and ancillary systems or is a repair-by-replacement a better option?

- How should the facility ensure a given daily output capacity: with multiple machines or a single dependable machine with rapid access to repair parts?
- Which system(s) should receive the most attention to improve reliability, especially if a repair-by-replacement posture is taken: compressors, valves, maintenance/spares, operations, other?
- Would new compressors be more dependable than the existing ones considering the Compressor Station's operational situation (i.e., starting and stopping compressors every day)?
- What should the Compressor Station look like in 10 years? How do we get there?

1.2 The Compressor Facility

High pressure air is provided by six, 6-stage compressors (Ref. 2). Three of these machines deliver 8 lbs/sec at 6,000 psi via Worthington BDC (Dresser-Rand) reciprocating compressors each with a 4,000 hp synchronous motor. The three smaller Clark CRA reciprocating compressors deliver 2.5 lbs/sec at 5,000 psi each with a 1,250 hp synchronous motor. There are five high-pressure, desiccant drying systems using activated alumina desiccant. Two of the small compressors share one dryer; all other compressors are each connected to a single dryer. Air delivery is via piping through an underground tunnel system from a series of storage bottle fields to the research facilities. The bottle field storage capacity is 36,000 cu-ft at 6,000 psi and 27,000 cu-ft at 5,000 psi.

Air Operations are planned and managed through weekly meetings at the Compressor Station by updating rolling three-week projections, based on inputs from the research facilities. The histogram of daily requests is illustrated in Figure 1.

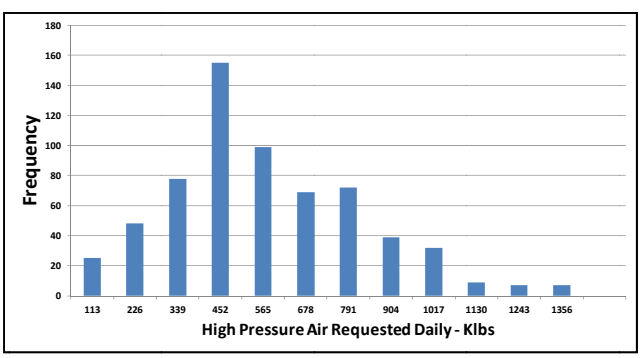

Figure 1 Daily Air Requests Histogram

The practice at the Compressor Station is to run available compressor(s) for a minimum of two to four hours per day. The Hypersonic Air breathing Propulsion 8-Foot High-Temperature Tunnel, the world's largest high pressure wind tunnel, requires 6,000 psi minimum air pressure for their research tests. While some research facilities require pressures in the 3,000 to 4,000 psi range and low volume; others use high-pressure air in the 3,000 to 5,000 psi range (Ref. 3).

The interrelationships of the various Compressor Station systems are illustrated in Figure 2. The major units consist of Compressors, Dyers, Cooling Towers, Oil Skimmer, the Vent System, and the Bottle Field storage system. Air from Compressors #1 and #2 are dried through Dryer #1. The capacity of Dryer #1 is limited to the output of one compressor at a time. If one compressor is operating, the other would be in standby mode or down for maintenance or repair.

The Station's normal schedule is based on two 8 hour shifts per day (M-F). However, due to frequent equipment outages, the operators often must work a third shift and/or weekends in order to satisfy daily demand.

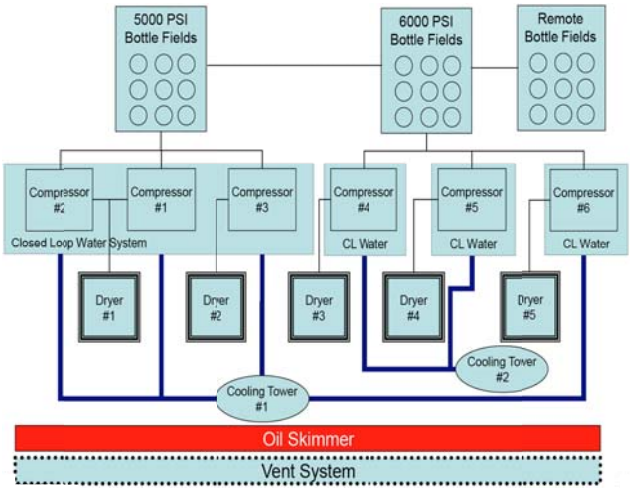

Figure 2 Compressor Station Diagram

2. RELIABILITY AND AVAILABILITY EVUATION

2.1 The Raptor Tool

The Raptor tool, which was used in this study, is a Windows-based simulation program offered by ARINC Corporation that provides modeling capabilities for reliability, cost, and capacity trade-off studies. Raptor's graphic interface uses drag-and-drop reliability-block-diagram (RBD) format to simulate operations analysis with an emphasis on availability.

2.2 Reliability Analysis

The reliability assessment comprised three steps: 1) development of a reliability database, which was used to

estimate MTBF of compressors, dryers, and cooling towers, 2) development of the system-level reliability simulation using the Raptor tool, and 3) evaluation of the system reliability for each of the sustainment options.

Compressor Station maintenance records were screened and failures were assigned to the applicable systems. Exposure times were estimated from compressor hour-meter readings in the Facility Maintenance Log database. For repairable components, assuming an exponential distribution for time between failures, given N failures and total exposure time T, the Maximum Likelihood Estimator of the MTBF is given simply as T/N. These concepts were used to estimate the failure rate/hour and the MTBF (equal to the reciprocal of the mean failure rate) of the various subsystems. Table 1 presents exposure times for the compressors and associated dryers and cooling towers.

Table 1 Exposure Times

SUBSYSTEM	Hours
Compressor #1	4,704
Compressor #2	885
Compressor #3	1,061
Compressor #4	8,941
Compressor #5	7,692
Compressor #6	6,717
Cooling Tower #1	13,367
Cooling Tower #2	16,633
Dryer #1	5,589
Dryer #2	1,061
Dryer #3	8,941
Dryer #4	7,692
Dryer #5	6,717

Compressor Downtime distribution is represented as the sum of three distributions: Pre-repair Logistic Downtime, Repair Time, and Post-repair Logistic Delay. These distributions were developed from elicitations with the Compressor Station Facility Process Engineer and summed using Monte Carlo simulation to produce a distribution for total downtime as illustrated in Figure 3. The mean downtime was estimated to be 56.4 hours with a standard deviation of 36 hours.

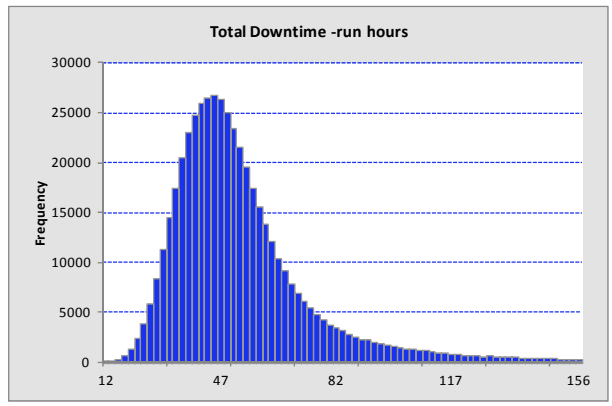

Figure 3 Total Downtime

MTBF estimates for new replacement equipment were estimated from the following sources:

- Dresser-Rand Corporation (Ref. 4)
- Sloan Brothers Co. (Watchman lubrication system)
- Naval Surface Warfare Center (NSWC) reliability calculator provided by ALD, Inc.
- Nuclear regulatory Commission/ Institute of Nuclear Power Operations EPIX (an equipment failure data base), NUREG/CR6928 , NUREG/CR7037, and NUREG /CR5419 (valve and dryer failure rates)

2.3 Availability Analysis

Performance statistics were calculated using simulation data from a minimum of 12,000 hours of continuous operation. This represented at least three years assuming the plant operates 16 hours per day, Monday through Friday, excluding holidays. The following system metrics were used to assess and compare the various alternatives:

- Operational Availability (A_o) = Uptime/(Uptime + Downtime)
- The probability of meeting daily demand working two shifts (no overtime)
- The probability of meeting daily demand if a third shift (overtime) is allowed
- The percentage of days that a third shift is required
- Daily air capacity relative to daily air requested (excess or shortage)
- Total cost (Present Worth and Annual Worth) in FY11 constant worth dollars
    - O&M
    - PP&E

The analysis used Compressor Station daily air request data from October 4, 2008 through April 29, 2011, excluding weekends and holidays. This air request data was plotted as an empirical cumulative probability distribution in Figure 4 in order to highlight the percentiles of the distribution. The 90th percentile is 870 klbs of air. In

other words, the amount of air requested on any given day has a probability of being less than or equal to 870 klbs. The Compressor Station's goal is to meet or exceed requests at least 90 percent of the time. Hence, the demand curve provides a yardstick against which to measure the probability of meeting their stated goal.

The maximum air capacity of the system is degraded whenever critical components become unavailable due to scheduled or unscheduled downing events. Management can decide to schedule a third shift whenever the day's air production falls short of the requested amount of air. This operational flexibility needed to be taken into account in the analysis.

The availability and reliability of the compressors and other ancillary equipment, such as dryers and valves, was evaluated using the Raptor tool; but, Raptor was unable to factor in operational decisions based on the level of air output. To compensate, an Excel spreadsheet tool was developed to process Raptor's detailed event file and schedule overtime when necessary. The event file details system operations versus time. Whenever a system event occurred in Raptor (such as when a compressor failed, a dryer failed, compressor came back up, etc.) Raptor recorded the event and the time of its occurrence in the event file. The Excel post processor used this detailed event information to create a daily summary of the total amount of air produced in 8-hour shifts.

The post processor decided whether two shifts or three needed to be worked. After two shifts of Raptor data was processed, the air produced was compared to the amount requested. If the day's demand was met or exceeded, the processor began to process the next string of data as a new work day. If demand was not met after two shifts, the tool continued to process a third 8-hour shift. After the end of the third shift, either the day's demand was met or it was not. Failure to meet demand was counted a failure.

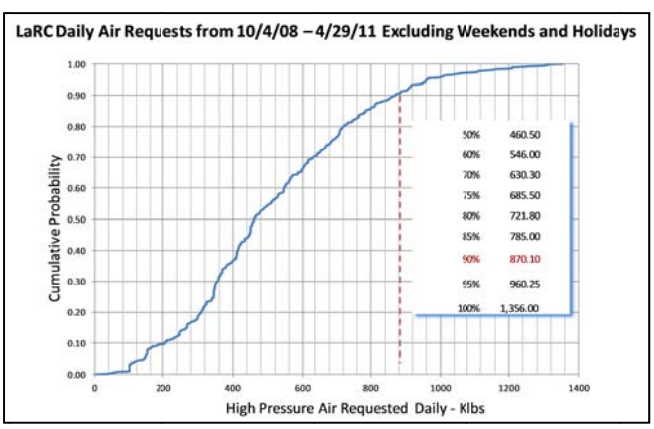

Figure 4 Daily Air Requests Distribution

3. THE REPLACEMENT PLAN

The study team recognized the need to evaluate compressor replacement strategies rather than specific replacement candidates. The notion of a strategy emphasizes the long-term nature of any feasible sustainment plan. The Base Case for evaluation, against which the other alternatives were compared, is a variant of the refurbishment strategy that has been in place since 2007.

The replacement strategy included four equipment replacement Phases as described below. Following the Base Case, which begins at the end of FY11, subsequent Phases are spaced on 3-year intervals beginning in FY14 and extending through FY26. Each new Phase represents the opportunity to replace an aging compressor with a new compressor. The Phases build on one another as each new compressor is brought on line and an old compressor is salvaged. The recommended order in which compressors are replaced is based on a number of factors including, age, condition, and capacity. Reliability, availability and cost metrics are presented by Phase over the entire planning horizon, which extends through 2026. For example, the Base Case is one in which Phase 1 through 4 are <u>not</u> exercised. Consequently, it extends throughout the planning horizon under the assumptions defined above – without replacing any of the existing compressors.

Phase 1 begins with the Base Case and then in FY14 replaces the three small compressors with one new large (8 lbs/sec.) compressor. It also requires a one new dryer to replace Dryers #1 and #2.

Phase 2 begins with Phase 1 and assumes Compressor #6 is replaced in FY17 with a new large compressor of the same capacity. Phase 2 does not require replacement of Dryer #2.

Phase 3 begins with Phase 2 and assumes Compressor #4 or #5, whichever one is selected for salvage at that time, is replaced in FY20. Phase #3 does not require a replacement of the dryer.

Phase 4 begins with Phase 3 and assumes the remaining old compressor (#4 or #5) is replaced in FY23. Phase 4 does not require replacement of its dryer. As an alternative to Phase 4, salvage the remaining old compressor and do not replace it.

4. SUMMARY OF RESULTS

The RR analysis shows that investing in new compressors can significantly increase the system availability, reliability, and capacity, which in combination increase the probability of meeting air demand. The two-

shift probability of meeting air demand improved from 79.7 percent for the Base Case to 97.3 percent for Option 4 as shown in Figure 5.

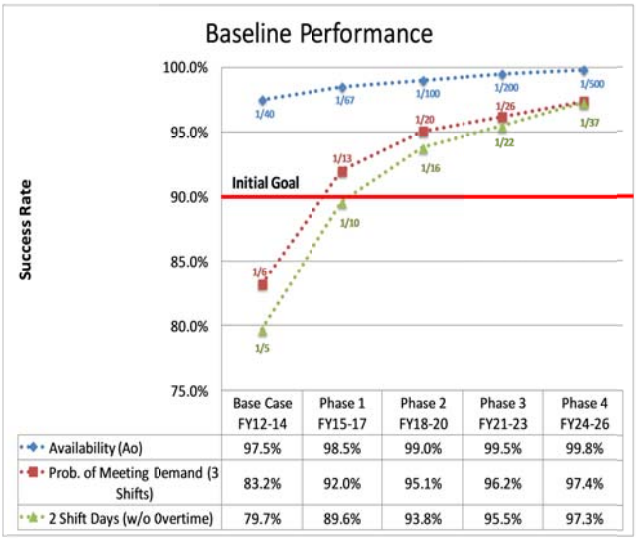

	Base Case FY12-14	Phase 1 FY15-17	Phase 2 FY18-20	Phase 3 FY21-23	Phase 4 FY24-26
Availability (Ao)	97.5%	98.5%	99.0%	99.5%	99.8%
Prob. of Meeting Demand (3 Shifts)	83.2%	92.0%	95.1%	96.2%	97.4%
2 Shift Days (w/o Overtime)	79.7%	89.6%	93.8%	95.5%	97.3%

tives

Expressed in terms of a reduction in the probability of failing to meet demand (1 in 5 days to 1 in 37 days), the improvement is about 700 percent. Similarly, compressor replacement improved the operational availability of the facility from 97.5 percent for the Base Case to 99.8 percent for Option 4. Expressed in terms of a reduction in system unavailability (1 in 40 to 1 in 500 days), the improvement is better than 1000 percent (an order of magnitude). The total cost of investments in Plant Property and Equipment (PP&E) in constant worth FY11 dollars to achieve this improvement would be about $12M. This would be offset by a reduction in total cost for operation and maintenance (O&M) of $4.3M resulting in a net increase of $7.7M over 15 years as shown in Figure 7. However, since the analysis did not account for the escalating O&M cost due to increasing failure rates over time for the existing compressors, and did not credit the reduction in O&M cost with new compressors due to shorter downtimes; the net increase in total cost due to compressor replacement should be offset by cost savings in the long run.

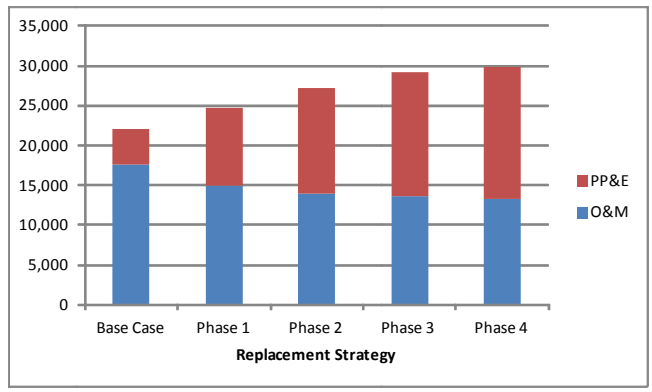

Figure 7 Present Worth Total Cost of Alternatives

5. FINDINGS

- The ages of the LaRC compressors are well in excess of 30 years with most having been built in the 1950 – 1990 timeframe.
- Reactive (corrective) maintenance, as was practiced by the LaRC compressor station, resulted in higher maintenance costs and an increase in unscheduled downing events.
- The primarily reactive maintenance approach (fail-fix) of the existing compressor facility runs a greater risk of safety-related catastrophic events.
- Personnel safety is threatened due to the lack of knowledge of the current status of pressure components (e.g., valves, piping, and pressure-containing tanks).
- Failure data collected by the Compressor Station is not currently in a form that can be used to predict equipment reliability without extensive data conditioning.
- Heat exchangers within the compressors, primarily the intercoolers and aftercoolers, and other heat exchangers in the system are subject to corrosion. These components will exceed their 20 year life within the planning horizon of this study and will need to be replaced.

6. RECOMMENDATIONS

- Use the provided Replacement plan as the basis for the refurbishment of the compressor facility.
- Ensure that the catastrophic failure modes and hazards of compressor facility equipment are well understood and that proper controls are in place (foundations, piping, pressure bottles, etc.).

- Work with the facility maintenance contractor to develop better maintenance data practices and data-gathering information for systems and components.
- Fund, implement, and execute a reliability-centered maintenance (RCM) program, which includes preventive, predictive, and corrective maintenance activities. Implementing an RCM program will help identify critical parts and life-limited components, as well as identifying appropriate maintenance activities and scheduling to ensure reliability optimization.

REFERENCES

1. Safie, F. M, et al., "Reliability, Maintainability, and Availability, Independent Assessment of LaRC High Pressure Compressor Facility ," Langley Research Center, Virginia, 2011
2. Senter, H., High Pressure Air and Production and Distribution Capability Sustainment: Transition to Operable State and its Sustainment, Additional Options, and its Go-Forward Strategy, January 2011.
3. McCreery, R., High-Pressure Air Production and Distribution Complex: Compressor Station Status, October 2010.
4. Dresser Rand, Dynamic Field Study, PD # 61653_Revision 1, March 2010.

BIOGRAPHIES

Fayssal M. Safie, Ph.D., CRE
NASA Marshall Space Flight Center / QD30
Huntsville, Alabama 35812
USA

Internet (e-mail): fayssal.safie@msfc.nasa.gov

Dr. F. Safie is currently serving as The NASA Reliability and Maintainability (R&M) Technical Fellow lead. He joined NASA in 1986 as a reliability and quality engineer at Marshall Space Flight Center (MSFC). He received Over 50 honors and Awards including the NASA Exceptional Engineering Achievement Medal, the NASA Flight Safety Award, the NASA Quality Assurance Special Achievement Recognition (QASAR) Award, and the NASA Silver Snoopy Award. He published over 40 papers in R&M Engineering, Probabilistic Risk Assessment, System Safety, Quality Engineering, and Computer Simulation. Besides his responsibility as a NASA Tech Fellow, Dr. Safie is serving as an Adjunct Professor in the Systems Engineering Department at the University of Alabama in Huntsville (UAH). He has a Bachelor degree in science, a Bachelor, a Master, and a Doctorate in engineering.

Robert W. Ring
Bastion Technologies, Inc.
NASA Marshall Space Flight Center / QD35
Huntsville, Alabama 35812
USA

Internet (e-mail): Robert.W.Ring@msfc.nasa.gov

Mr. Ring is currently employed with Bastion Technologies Inc. as the Risk Assessment Technical Lead in the Reliability and Maintainability Engineering Department supporting NASA's Safety and Mission Assurance Directorate at Marshall Space Flight Center. Since 2006, he has been responsible for leading the contractor support team in the development of probabilistic risk assessment models of the Space Shuttle, the Ares I Launch Vehicle, and the Space Launch System. He was the Space Flight Awareness Honoree for STS-135 and has published 8 technical papers in the areas of Reliability Engineering, Statistical Quality Engineering, and Probabilistic Risk Assessment. He has Bachelor of Science and Master of Science degrees in Mathematics from Ohio State University and a Master of Science in Engineering from the University of Alabama in Huntsville.

Stuart Kirkham (Kirk) Cole, Ph.D., PE
NASA Langley Research Center / D501
Hampton, Virginia 23681-2199
USA

Internet (e-mail): Stuart.Cole@nasa.gov

Dr. Cole is serving as the Engineer-In-Charge to the Compressor Station and High Pressure Air Distribution System for the Research Directorate at Langley Research Center where he is responsible for the facility's engineering, systems, processes, and planning activities. He has published over 25 papers in environmental processes, design, and engineering. Dr. Cole is an Adjunct Faculty in Research at Old Dominion University (ODU) Civil and Environmental Engineering Department. He has a Bachelor degree in civil engineering from Virginia Military Institute, a Masters in Civil Engineering and Doctorate in Environmental Engineering from ODU.