System Engineering Processes at Kennedy Space Center for Development of SLS and Orion Launch Systems

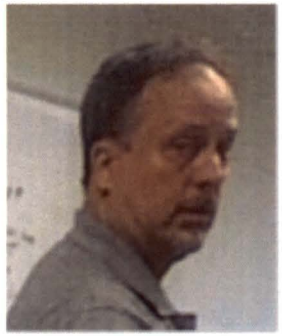

Eric J. Schafer, Dr. Gena Henderson, Damon Stambolian
NASA Kennedy Space Center (KSC)
Engineering and Technology Directorate

Problem Introduction

There are over 40 subsystems being developed for the future SLS and Orion Launch Systems at Kennedy Space Center. These subsystems are developed at the Kennedy Space Center Engineering Directorate.

Solution

The Engineering Directorate at Kennedy Space Center follows a comprehensive design process which requires several different product deliverables during each phase of each of the subsystems.

This Presentation describes this process with examples of where the process has been applied.

Responsible agents

The responsible agents for success are:

- Project manager
- Systems engineer
- Receipt desk
- Stakeholders such as chief engineer, operations engineer, materials and process engineer, reliability engineer, safety and mission assurance engineer, environmental engineer, human factors engineer, logistics engineer, information engineers, configuration/data management reps, and external disciplines experts.

Responsible agents

Systems Engineer shall:

- Coordinate system interfaces end-to-end.
- Integrating the system design with other elements of the project.
- Provide technical assistance, inputs, and necessary technical documents for the review.
- Verify that interfaces are identified and understood at each design review.
- Lead the design team in the review and disposition of submitted comments prior to the review.
- Verifying entrance criteria for Informal Technical Reviews, including the content and readiness of technical review packages.

Process Flow

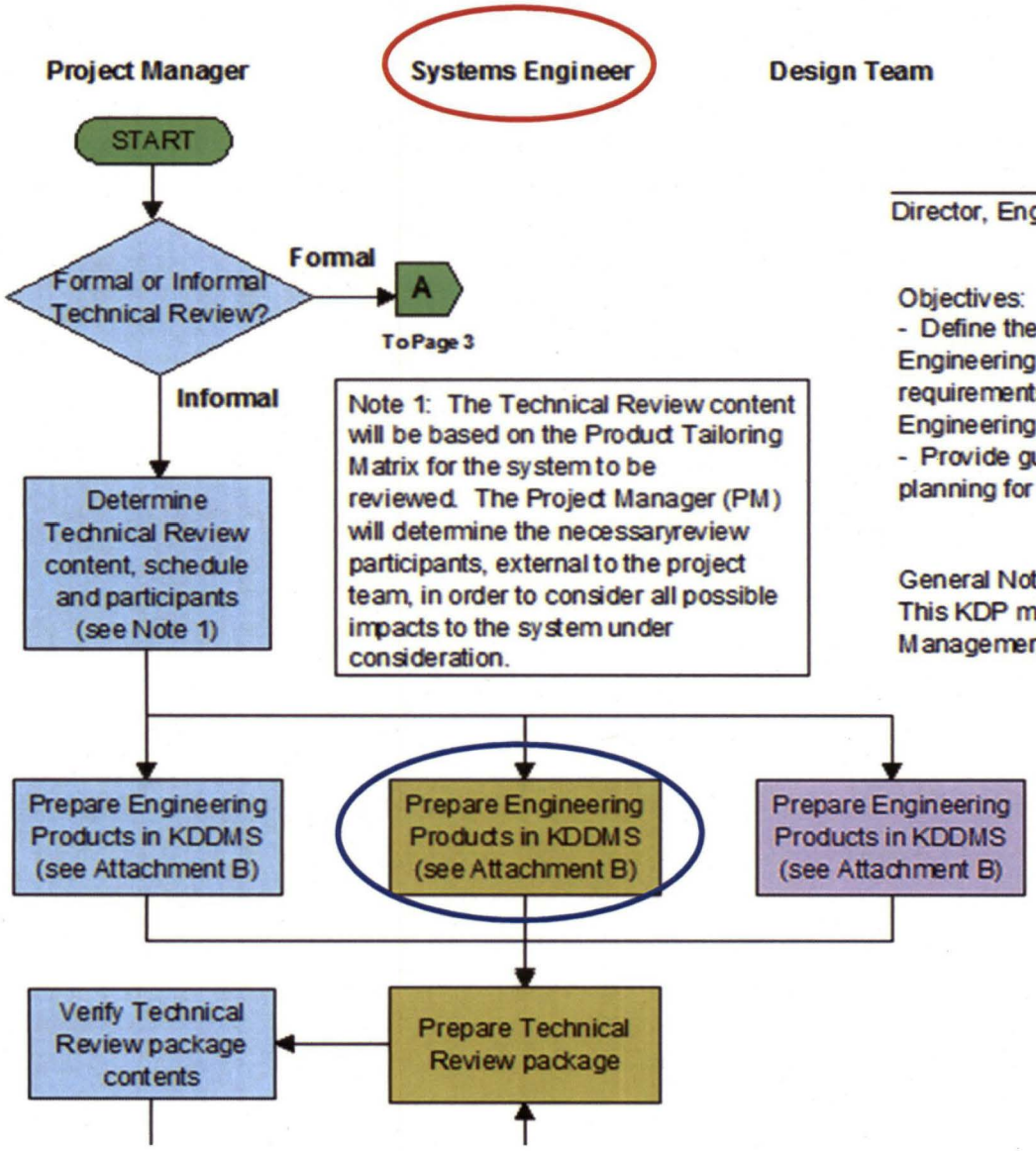

Note 1: The Technical Review content will be based on the Product Tailoring Matrix for the system to be reviewed. The Project Manager (PM) will determine the necessaryreview participants, external to the project team, in order to consider all possible impacts to the system under consideration.

Director, Engineering and Technology Directorate

Objectives:
- Define the Technical Review process for the KSC Engineering and Technology Directorate to meet the requirements of NPR 7123.1, NASA Systems Engineering Procedural Requirements.
- Provide guidance for Technical Review content and planning for both Formal and Informal Technical Reviews

General Note:
This KDP may be tailored by the Systems Engineering Management Plan (SEMP) for a specific project or activity.

Engineering Products Outline

Product ID	Product Title	Product Attributes*			Technical Reviews												
		Owner	Author	Required?	SRR	Informal Design Reviews						OR	Formal Design Reviews		AND	TRR	SAR or DCR
						30%	60%	OR	45%	AND	90%		PDR	CDR			
1[1]	Team Roster	PM	PM	Mandatory	P	U	U		U		U		U	U		U	U
2	Concept of Operations	SE	SE	Mandatory	B	U	U		U		F		U	F			
3	Project Plan	PM	PM	Mandatory	B	U	U		U		U		U	U		U	F
4	Systems Engineering Management Plan (SEMP)	SE	SE	Mandatory	B	U	U		U		U		U	U		U	F
5	Software Development Plan (SDP)	SE	DE	If Applicable	B	U	U		U		U		U	U		U	F
6	Risk Management Plan (RMP)	PM	PM	Mandatory	B	U	U		U		U		U	U		U	F
7	Configuration Management Plan (CMP)	SE	SE	Mandatory	B	U	U		U		U		U	U		U	F
8	Quality Assurance Plan (QAP)	SE	SPE	Mandatory	B	U	U		U		U		U	U		U	F
9	Trade Study Plan/Report	SE	DE	If Applicable	B	U	U		U		F		U	F			
10	System Requirements	SE	SE	Mandatory	B	U	U		U		F		U	F			
11[2]	Cost Estimate	PM	SE	Mandatory	B	U	U		U		U		U	U		U	U
12[1]	Schedule	PM	SE	Mandatory	B	U	U		U		U		U	U		U	U
13	Risk Matrix	PM	SE	Mandatory	B	U	U		U		U		U	U		U	U
14	Acquisition Plan	PM	PM	Mandatory	P	B	U		B		F		B	F			
15	Product Tailoring Matrix	PM	SE	Mandatory	B	U	U		U		U		U	U		U	F
16	Lessons Learned Plan/Report	SE	SE	Mandatory	P	U	U		U		U		U	U		U	F
17[1]	Interface Control Document (ICD)	SE	SE	If Applicable	P	B	U		B		F		B	F			
18	Interface Table	SE	SE	If Applicable	B	U	U		U		F		U	F			
19	Reliability and Safety Assessment Report (RSAR)	SE	SPE	Mandatory	P	U	U		P		B[3]		U	B[3]		U	F
20	Prototype Plan/Report	DE	DE	If Applicable	B	U	U		U		F		U	F			
21	Design Verification Matrix	SE	SE	Mandatory	P	U	U		U		U		U	U		U	F
22	System Assurance Analysis (SAA)	SE	SPE	If Applicable	N/A	P	U		P		B[3]		U	B[3]		U	F

Concept of Operations

Systems Engineer shall:

- Coordinate system interfaces end-to-end.
- Integrating the system design with other elements of the project.
- Provide technical assistance, inputs, and necessary technical documents for the review.

Concept of Operations - GCS

System Concept Interfaces

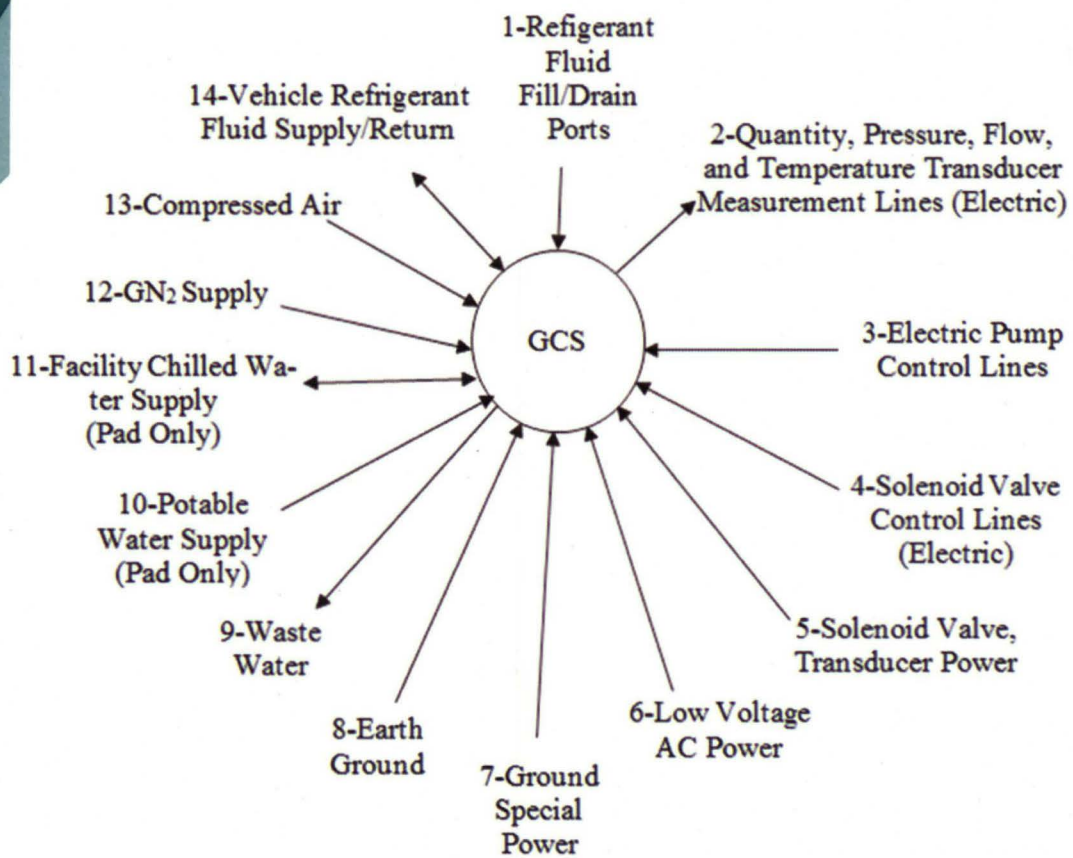

1. **Refrigerant Fluid Fill/Drain** - These ports facilitate loading and draining of the various GCS refrigerant loops and their reservoirs.

2. **Quantity, Pressure, Flow, and Temperature Transducer Measurement Lines** - These devices provide information to,...

Concept of Operations – Pad GCS

Interface Diagram

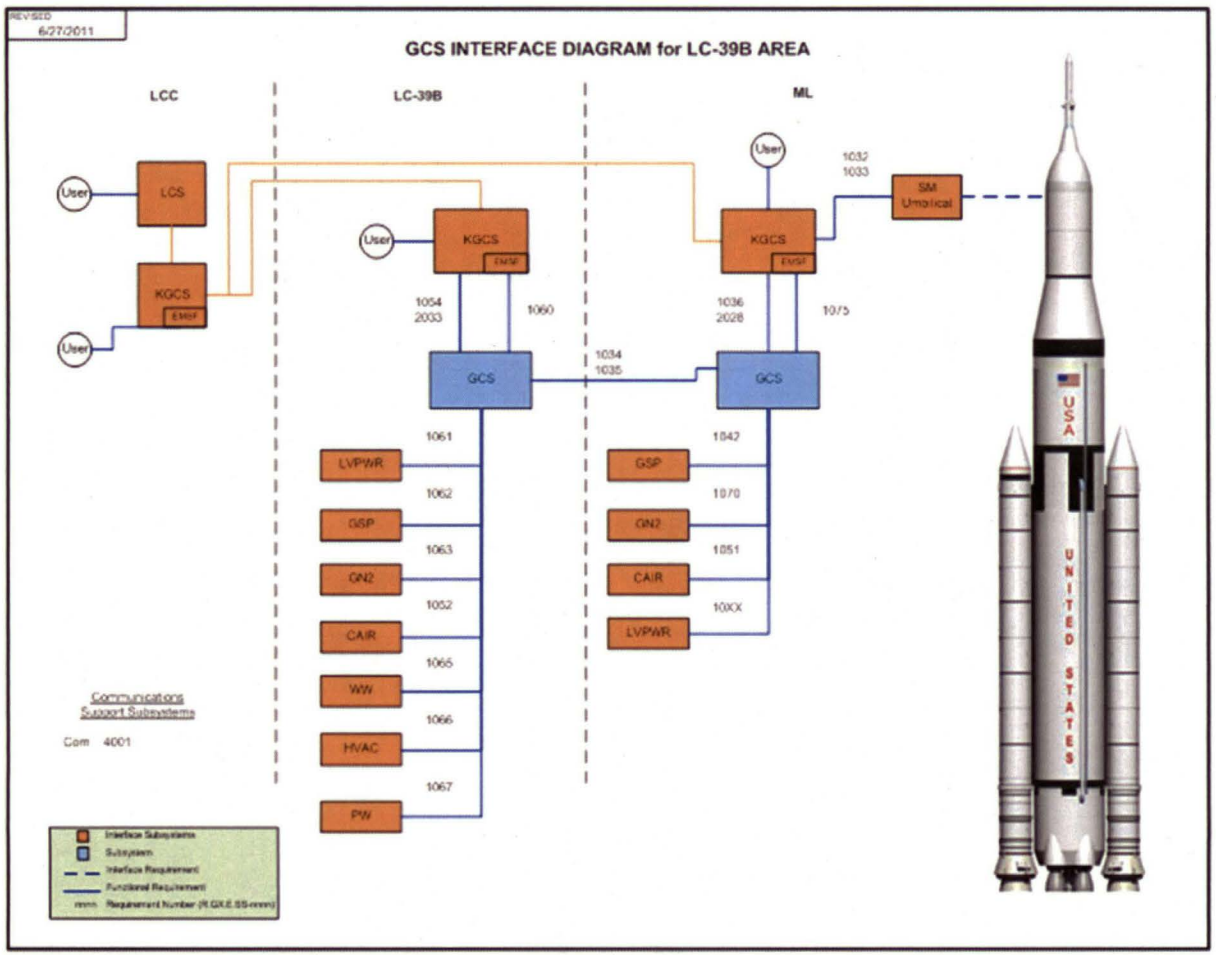

Concept of Operations - GCS

Functional Architecture

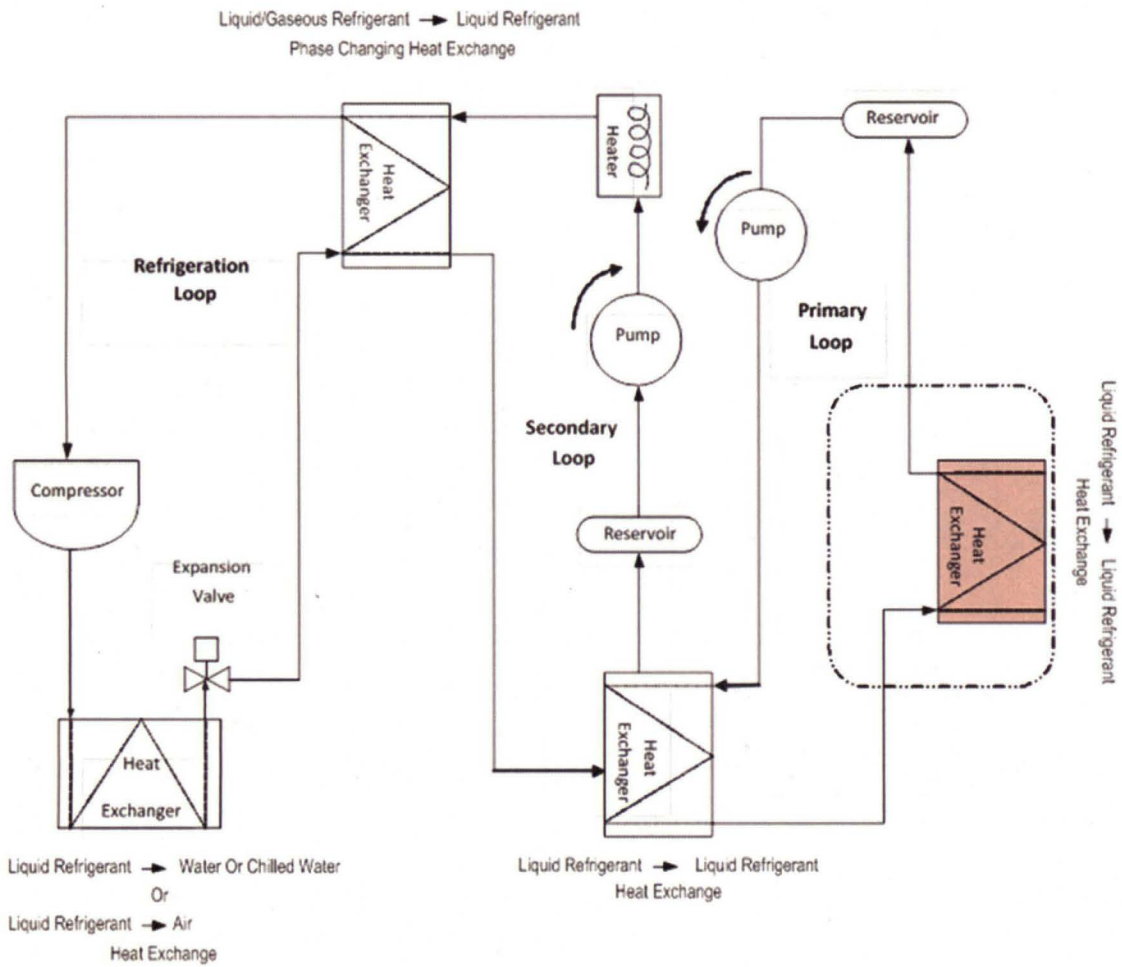

Concept of Operations - GCS

The primary operations for the Pad GCS are:

- Connection – This step identifies integration with the ground cooling facility at the Pad.
  - Close the isolation valves and hoses.
  - Connect the hoses.
  - Open the isolation valves.
  - Run the loops to condition the loop.
  - Etc...
- Pre-Operations – This step identifies setup activities and necessary conditions for operations.
  - Fluid Flow and Reservoir(s) Level Check
  - Etc...

Systems Requirements

One of the key systems engineer products that are reviewed is the requirements related to the subsystem.

- These requirements originate from the program as level 1 and 2 requirements. As an example of a high level requirement from the Space Shuttle would be: The Space Shuttle Shall use solid rocket motors.
- Then these level 1 and 2 program requirements are further defined in the projects through the development of child level 3 and 4 requirements, and ultimately to level 5 requirements as they are defined by the systems design engineer.

Systems Requirements

- Along with these program requirements the design engineer may decide it necessary to add additional requirements that may not be driven by level 1 or 2 parent requirements.
  - An example of additional subsystem level 5 requirements is the Human Factors Assessment requirements.
- Once the requirements and the other products related to the system are generated, experts can review all of the requirements and provide Review Item Discrepancies (RIDS) and Action Items to the product owners so that corrections can be made. This is accomplished through the Technical Reviews.

Systems Requirements – Pad GCS

Pad GCS Compressed Air Supply	The Pad GCS shall receive compressed air supply to support refrigerant recovery as specified in the Interface Table….	Rationale: Pneumatically driven vacuum pumps are planned to be used to provide the capability to recover refrigerant.
Pad Local Control	The Pad GCS Subsystem shall provide local software control and monitoring to acquisition and control points specified in the Interface Table.	The plan is for subsystems to implement application software to control subsystem hardware.

Technical Reviews

Technical Reviews are conducted for the purpose of informing all affected organizations of the progress of a system's development in preparation for key decision points in the formulation and implementation phases of the project life cycle.

Technical Reviews are accomplished in progressive steps as the system is developed to allow those affected organizations to anticipate problems that could be avoided before the hardware or software is procured or fabricated. The number of Technical Reviews required will depend on the significance and complexity of the system, or changes in requirements.

Technical Reviews

A technical review is an evaluation of the project, or element thereof, by a knowledgeable group for the purposes of:

- Assessing the status of and progress toward accomplishing the planned activities.
- Validating the technical tradeoffs explored and design solutions proposed.
- Identifying technical weaknesses or marginal design and potential problems (risks) and recommending improvements and corrective actions.

Technical Reviews

- Making judgments on the activities, readiness for the follow-on events, including additional future evaluation milestones to improve the likelihood of a successful outcome.
- e. Making assessments and recommendations to the project team, Center, and Agency management.
- f. Providing a historical record that can be referenced of decisions that were made during these formal reviews.
- g. Assessing the technical risk status and current risk profile.

Technical Reviews

- System Requirements Review (SRR) and Preliminary Design Review (PDR) are conducted during the formulation phase of a project.
- The System Requirements Review (SRR), Preliminary Design Review (PDR), and Critical Design Review (CDR) are conducted during the design phase of a system
- Test Readiness Review (TRR), and System Acceptance Review (SAR)/Design Certification Review (DCR) are conducted during the implementation phase of a project culminating in transition from the design and development community to the operational community.

Technical Reviews

Engineering Products are required for each design review, 30%, 60% 90%. Examples of products are:

- Concept of Operations
- Requirements
- Lessons Learned Plan/Report
- Human Factors Assessment
- Etc.

Product ID	Product Title	Product Attributes*			Technical Reviews											
		Owner	Author	Required?	SRR	Informal Design Reviews					OR	Formal Design Reviews		AND	TRR	SAR or DCR
						30%	60%	OR	45%	AND	90%		PDR	CDR			
1[1]	Team Roster	PM	PM	Mandatory	P	U	U		U		U		U	U		U	U
2	Concept of Operations	SE	SE	Mandatory	B	U	U		U		F		U	F			
3	Project Plan	PM	PM	Mandatory	B	U	U		U		U		U	U		U	F
4	Systems Engineering Management Plan (SEMP)	SE	SE	Mandatory	B	U	U		U		U		U	U		U	F
5	Software Development Plan (SDP)	SE	DE	If Applicable	B	U	U		U		U		U	U		U	F
6	Risk Management Plan (RMP)	PM	PM	Mandatory	B	U	U		U		U		U	U		U	F
7	Configuration Management Plan (CMP)	SE	SE	Mandatory	B	U	U		U		U		U	U		U	F
8	Quality Assurance Plan (QAP)	SE	SPE	Mandatory	B	U	U		U		U		U	U		U	F
9	Trade Study Plan/Report	SE	DE	If Applicable	B	U	U		U		F		U	F			
10	System Requirements	SE	SE	Mandatory	B	U	U		U		F		U	F			
11[2]	Cost Estimate	PM	SE	Mandatory	B	U	U		U		U		U	U		U	U
12[1]	Schedule	PM	SE	Mandatory	B	U	U		U		U		U	U		U	U
13	Risk Matrix	PM	SE	Mandatory	B	U	U		U		U		U	U		U	U
14	Acquisition Plan	PM	PM	Mandatory	P	B	U		B		F		B	F			
15	Product Tailoring Matrix	PM	SE	Mandatory	B	U	U		U		U		U	U		U	F
16	Lessons Learned Plan/Report	SE	SE	Mandatory	P	U	U		U		U		U	U		U	F
17[3]	Interface Control Document (ICD)	SE	SE	If Applicable	P	B	U		B		F		B	F			
18	Interface Table	SE	SE	If Applicable	B	U	U		U		F		U	F			
19	Reliability and Safety Assessment Report (RSAR)	SE	SPE	Mandatory	P	U	U		P		B[7]		U	B[7]		U	F
20	Prototype Plan/Report	DE	DE	If Applicable	B	U	U		U		F		U	F			
21	Design Verification Matrix	SE	SE	Mandatory	P	U	U		U		U		U	U		U	F
22	System Assurance Analysis (SAA)	SE	SPE	If Applicable	N/A	P	U		P		B[7]		U	B[7]		U	F

Purpose of the 30% Design Review

The 30% Design Review demonstrates that the preliminary design meets all system requirements with acceptable risk and within the cost and schedule constraints and establishes the basis for proceeding with detailed design. It will show that the correct design options have been selected, interfaces have been identified, and verification methods have been described.

Purpose of the 60% Design Review

The 60% Design Review demonstrates that significant progress has been made in the design since the 30% review and that the design meets all system requirements with acceptable risk within the cost and schedule constraints and confirms readiness to proceed with detailed design. It will show that the design is sound, interfaces have been defined to a significant extent, and verification methods have been confirmed.

Purpose of the 90% Design Review

The 90% Design Review establishes the system design baseline. It is conducted just before committing the design to procurement. It allows all affected customers and organizations to review the design to ensure their requirements have been satisfied.

30% Design Review Presentation

During the 30% design review the below areas are required to be covered in the presentation:

- Purpose
- Review Process
- Process Tailoring Matrix
- Subsystem Description
- Entrance Criteria
- Comment Disposition
- Comments Statistics
- Technical Issues Resulting from Review
- Summary of Risks
- Acquisition Strategy
- Schedule Milestones
- Success Criteria
- Recommendation

Example – GCS Subsystem Description

Ground Cooling Subsystem for the Pad is Ground Support Equipment (GSE) located in the Ground Cooling Facility at the ground level of the LC 39 Pad B. The GCS loads and circulates coolant through the Flight to Ground Heat Exchanger to reject heat from the crewed vehicle. The GCS nominally operates during all Orion powered up activities during ground processing.

Example - GCS Subsystem Description

Fluids Drawing

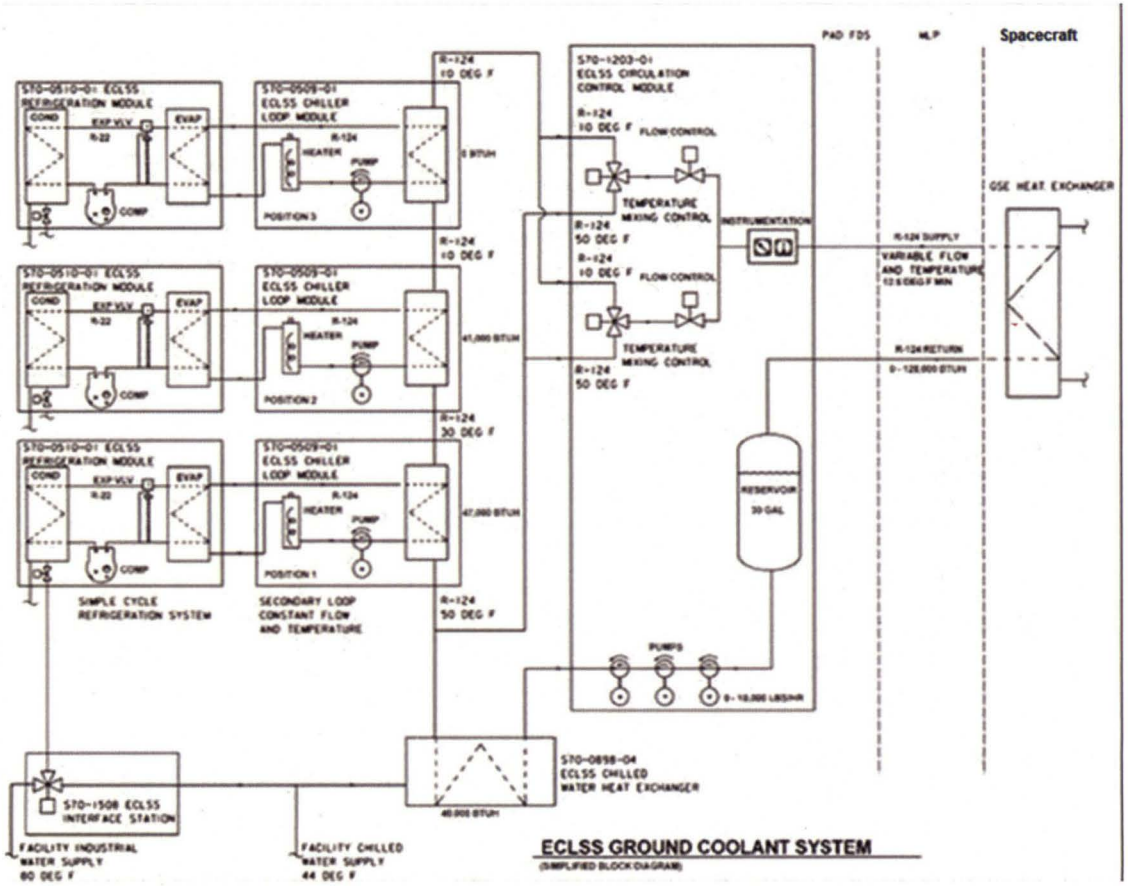

Examples - GCS Subsystem Description

Because the fluids system has been very robust and has been kept in excellent condition, there will most likely not be any major changes to that portion of the subsystem, but in order to interface with the new control systems being put in place at the KSC, the electrical portion of the GCS is going through the design reviews.

Examples - GCS Subsystem

Comments are reviewed at the design review for all of the products required for 30%.

Product ID	Product Title	Product Attributes*			Technical Reviews												
		Owner	Author	Required?	SRR	Informal Design Reviews						OR	Formal Design Reviews		AND	TRR	SAR or DCR
						30%	60%	OR	45%	AND	90%		PDR	CDR			
1[1]	Team Roster	PM	PM	Mandatory	P	U	U		U		U		U	U		U	U
2	Concept of Operations	SE	SE	Mandatory	B	U	U		U		F		U	F			
3	Project Plan	PM	PM	Mandatory	B	U	U		U		U		U	U		U	F
4	Systems Engineering Management Plan (SEMP)	SE	SE	Mandatory	B	U	U		U		U		U	U		U	F
5	Software Development Plan (SDP)	SE	DE	If Applicable	B	U	U		U		U		U	U		U	F
6	Risk Management Plan (RMP)	PM	PM	Mandatory	B	U	U		U		U		U	U		U	F
7	Configuration Management Plan (CMP)	SE	SE	Mandatory	B	U	U		U		U		U	U		U	F
8	Quality Assurance Plan (QAP)	SE	SPE	Mandatory	B	U	U		U		U		U	U		U	F
9	Trade Study Plan/Report	SE	DE	If Applicable	B	U	U		U		F		U	F			
10	System Requirements	SE	SE	Mandatory	B	U	U		U		F		U	F			
11[2]	Cost Estimate	PM	SE	Mandatory	B	U	U		U		U		U	U		U	U
12[1]	Schedule	PM	SE	Mandatory	B	U	U		U		U		U	U		U	U
13	Risk Matrix	PM	SE	Mandatory	B	U	U		U		U		U	U		U	U
14	Acquisition Plan	PM	PM	Mandatory	P	B	U		B		F		B	F			
15	Product Tailoring Matrix	PM	SE	Mandatory	B	U	U		U		U		U	U		U	F
16	Lessons Learned Plan/Report	SE	SE	Mandatory	P	U	U		U		U		U	U		U	F
17[1]	Interface Control Document (ICD)	SE	SE	If Applicable	P	B	U		B		F		B	F			
18	Interface Table	SE	SE	If Applicable	B	U	U		U		F		U	F			
19	Reliability and Safety Assessment Report (RSAR)	SE	SPE	Mandatory	P	U	U		P		B[3]		U	B[3]		U	F
20	Prototype Plan/Report	DE	DE	If Applicable	B	U	U		U		F		U	F			
21	Design Verification Matrix	SE	SE	Mandatory	P	U	U		U		U		U	U		U	F
22	System Assurance Analysis (SAA)	SE	SPE	If Applicable	N/A	P	U		P		B[3]		U	B[3]		U	F

30% Design Review Presentation

Entrance Criteria , Comments Statistics, Technical Issues, Summary of Risks, Acquisition Strategy, Schedule Milestones, Success Criteria, and Recommendations are all also presented at the review.

Summary

For many years Kennedy Space Center has performed design development using the systems engineering approach for the specialized processing of spacecraft for crewed vehicles, from Mercury, Gemini Apollo, International Space Station, to the recent Space Transportation System's for out of Low Earth Orbit, i.e. Moon, Mars, etc., developments stemming from the Constellation Program.

Because of the expertise carried down from the past, and because of the merging of new technologies coupled with the improved processes Kennedy Space Center is gaged for outstanding successes in crewed spaceflight for the 21st Century.

References

- [1] KDP-P-2713 Technical Review Process.
- [2] NASA Procedural Requirements. Systems Engineering Processes and Requirements. NPR 7123.17. http://nodis3.gsfc.nasa.gov/
- [3] Michael Bell, Gena Henderson and Damon Stambolian Lessons Learned for Improving Spacecraft Ground Operations. 2013 IEEEACpaper#2698
- [4] Damon B Stambolian, Gena Henderson, Darcy Miller, Gary Prevost, Donald Tran, Tim Barth. 1-G Human Factors for Optimal Processing and Operability of Ground Systems Up to CxP GOP PDR. 2011 IEEEACpaper#1007

Acknowledgements

All of this work would not be possible without Roger Mathews, developer of the 2713 Technical Review Process.