National Aeronautics and
Space Administration

Automated Cooperative Trajectories

Project Overview Briefing

February, 2015

Curt Hanson
Controls and Dynamics Branch
NASA AFRC
curtis.e.hanson@nasa.gov
661.276.3966

Joe Pahle
Controls and Dynamics Branch
NASA AFRC
joe.pahle-1@nasa.gov
661.276.3185

Nelson Brown
Controls and Dynamics Branch
NASA AFRC
Nelson.Brown@nasa.gov
661.276.5039

Automated Cooperative Trajectories

Cooperative Trajectory (CT) Concept

Proactive, collaborative approach to separation assurance and wake turbulence avoidance.

- Two or more aircraft
- Continuous data-link communication (such as ADS-B Out/In)
- Parallel, closely-spaced trajectories with reduced separation (0.5 – 2 NM)
- Automatic control to maintain separation
- Probabilistic vortex models combined with real-time, in situ measurements to estimate the location of the wake

The project goal is to demonstrate ACT using COTS technology (i.e. ADS-B datalink and modifications to existing autopilots)

Assured Autonomy for Aviation Transformation

ACT enables automated, distributed, multi-vehicle control.

- Distributed Knowledge of Aircraft and Wake Locations
- Integration of ADS-B Messages with Autopilot Systems

Safe, Efficient Growth in Global Aviation

Operation as Meta-Aircraft using automated, multi-vehicle coordination for peer-to-peer separation assurance and wake avoidance.

- Reduced Airspace Congestion
- Improved ATC Workload

Ultra-Efficient Commercial Transports

Sustained, trimmed flight within the upwash portion of the lead aircraft's wake reduces the trailing aircraft's total drag by up to 15%.

- Lower Cost per Mile
- Reduced Particulate Emissions at Altitude

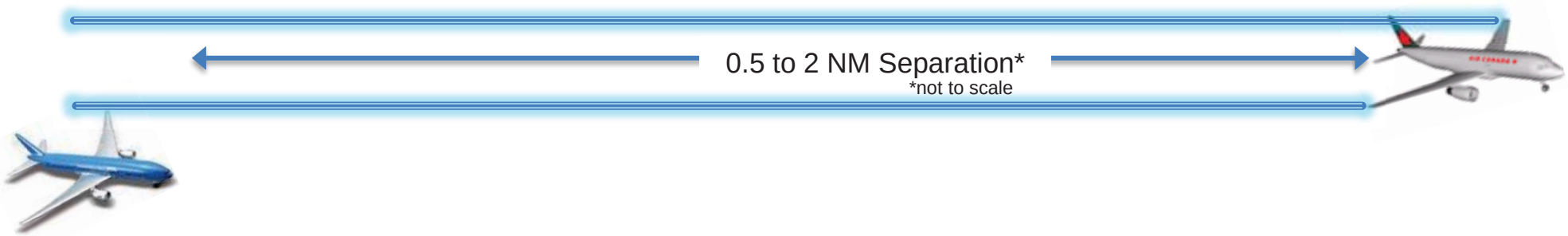

The Aerodynamics of Cooperative Trajectories

In cruise flight, an aircraft produces a wake that retains its structure and strength for several miles. The wake is characterized by the following:

- An area of downwash in the center of the wake
- Twin regions of upwash outboard of the vortex cores

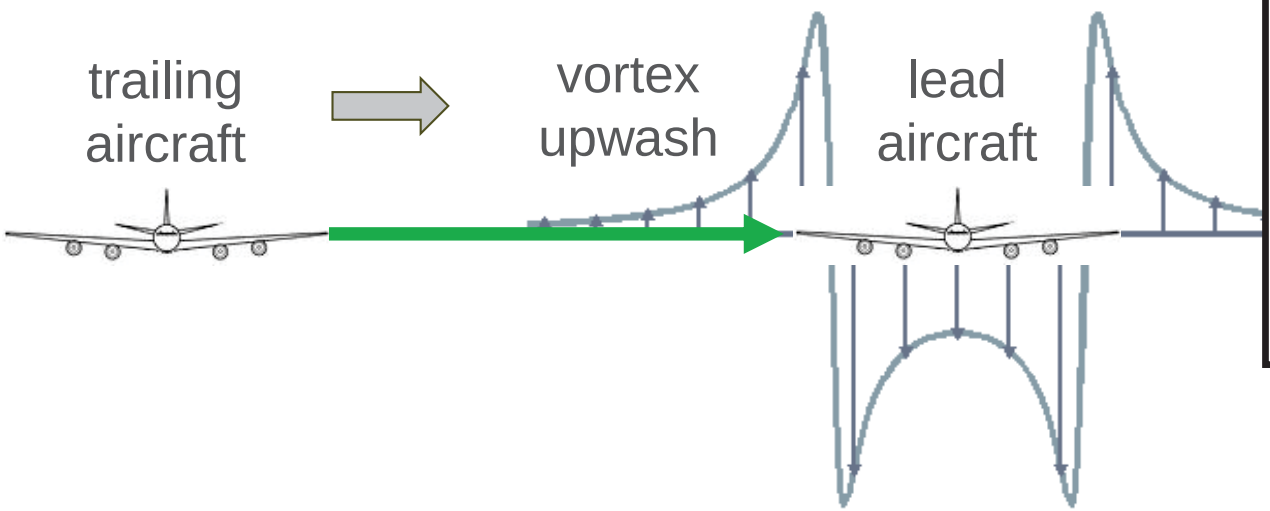

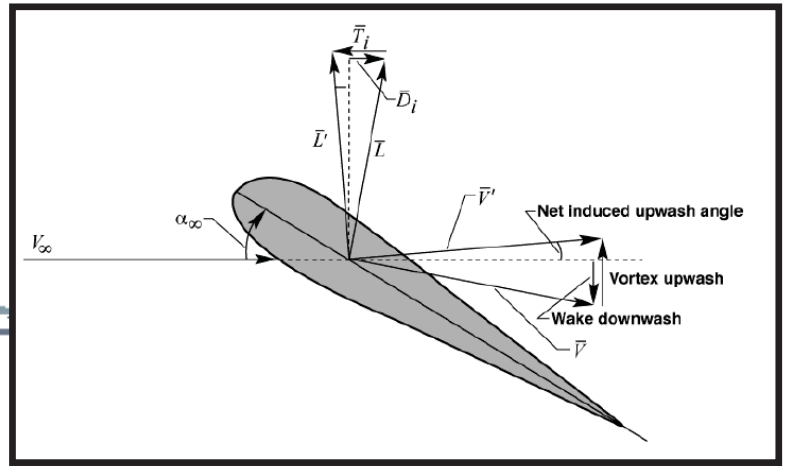

Two NASA aircraft in close formation flight (2001)

Sustained flight within the upwash produces two primary effects on the trail aircraft:

- A forward rotation of the lift vector, lowering induced drag → **10-15% fuel flow reduction for the trail airplane**
- An asymmetric span-wise lift distribution results in a roll trim imbalance → **highly non-linear, requiring automated station keeping**

How Do Wake Vortices Form and When Do They Occur?

- Vortices are a by-product of lift, and are always generated on a surface generating lift
- This vorticity rapidly rolls up into a vortex pair

- Vortices transport mass and momentum. Consequently, vortices can be a hazard to following aircraft
- Vortices are generated in all phases of flight (cruise, approach, departure, climb through, …)

How Do Wakes Evolve?

- **<u>Near Wake</u> region is where the vortex sheets from wings, flaps, tail, and fuselage, all wrap into several vortices …. which then coalesce into a pair of counter-rotating vortices**
  - This roll-up process usually occurs within 2 to 40 wingspans behind the generating aircraft
  - The vortex intensity is determined by the characteristics of the generating aircraft (e.g., aircraft type, weight, speed, wing span, air density)

- **Further behind, in the <u>Far Wake</u> region (>40 spans), wake evolution depends strongly on the environmental conditions**
  - Turbulence and thermal stratification make the vortices decay faster
  - Crosswind and turbulence can affect the geometry of the wakes

C-17s in Formation Flight

Air Force photo by Bobbi Zapka:
http://www.edwards.af.mil/shared/media/photodb/photos/100916-F-9126Z-024.jpg

Why Aren't Cooperative Trajectories Used Now?

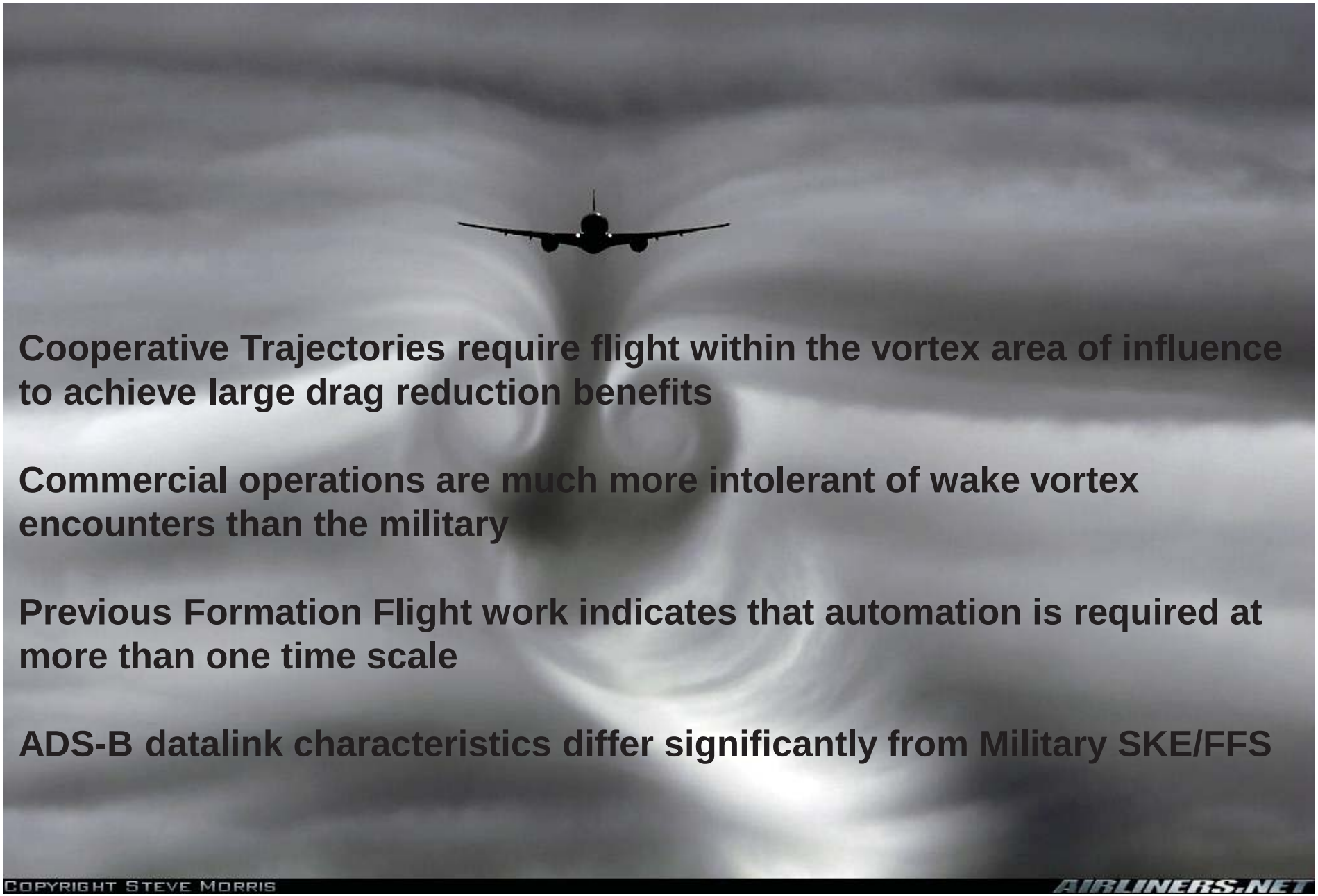

Cooperative Trajectories require flight within the vortex area of influence to achieve large drag reduction benefits

Commercial operations are much more intolerant of wake vortex encounters than the military

Previous Formation Flight work indicates that automation is required at more than one time scale

ADS-B datalink characteristics differ significantly from Military SKE/FFS

Cooperative Trajectories in the Airspace

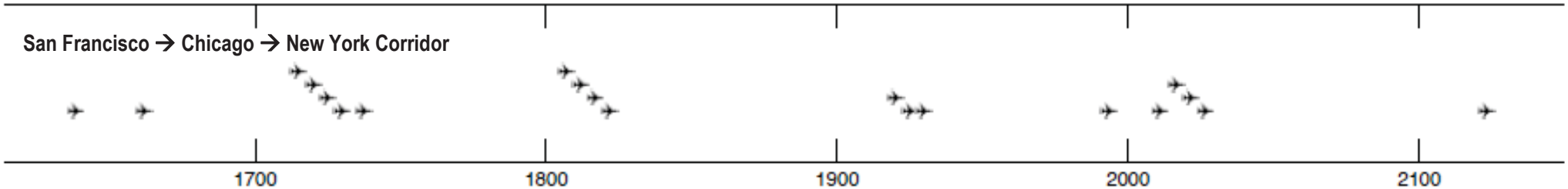

One Application: Corridor-in-the-Sky Formations (Xue and Hornby, 2012):

- Maximum of 4 aircraft in formation
- Merge aircraft within 50 nm
- Trailing airplane accelerates to merge with leader
- Top-Ten Corridors:
  - 20% of aircraft participate in formations
  - $320M - $600M annual savings
  - Assumes ~25% reduction in <u>induced</u> drag, scaled with relative aircraft sizes
  - Based on $4.22 per gallon fuel costs

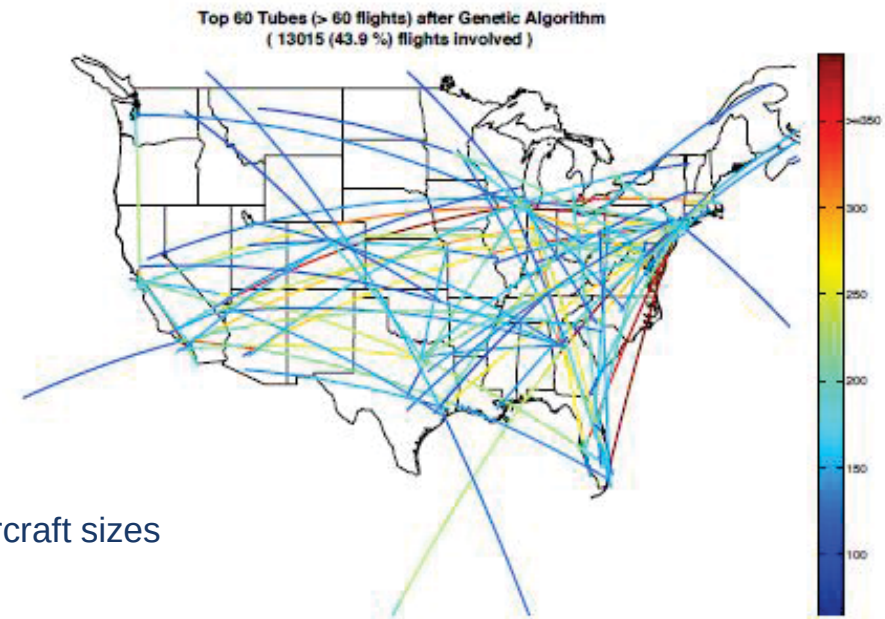

Figures from Xue and Hornby, 2012

Other Potential Airspace Operations Applications for Air-to-Air Relative Navigation and Control

- Closely-Spaced Parallel Runways
  - Wake turbulence mitigated arrivals
  - Timed paired departures
- Precision Departure Release capability
- Interval Management
- Trajectory based operations
- Efficient Descent Advisor
- Synthetic wake imaging displays

Technology Stakeholders / Customers

Military

- Working to develop an operational ACT capability for the C-17
  - Existing specialized C-17 data link and FFS
  - No commercial equivalent to these systems
- AFRL is investigating the use of ADS-B for non C-17 cooperative trajectory operations

Commercial Operators

- Carriers are intrigued by the concept, but don't (yet) know how to incorporate ACT into their operations
- NASA can help interface with FAA to solve regulatory issues
- Military and commercial operators have different requirements

WakeNet USA

- Meeting of government and industry experts
- Lower the risk of wake turbulence upsets, reduce separation and increase throughput

NATO

- Exploratory team on formation flight for efficiency

Who Is Interested in Cooperative Trajectories?

"What you're actually doing when flying in formation is you're harvesting some of that energy. […] One of the things about working in research and technology, whether it's at a company like Boeing or at NASA, is you've really got to look far off into the future."

- Mark Anderson, Director
  Boeing Flight Sciences Technology

"Formation flying, actually we're not talking about the Red Arrows, so you're not wing-to-wing flying together but it's more like birds, talking about maybe one nautical mile separation, so you actually use the wake of the aircraft in front of you to burn less fuel."

- Charles Champion, Executive Vice President Engineering
  Airbus

"Could you ever reach a point where you have cooperation among the airlines, where they say, 'OK you get the benefit this way, and we'll get the benefit coming back?' The numbers of fuel savings we're talking about are compelling enough that they ought to at least look at it."

- Dr. Don Erbschloe, Chief Scientist
  USAF Air Mobility Command

Technological and Operational Challenges

Air-to-Air Relative Navigation and Autopilot Control

- 1090 MHz ADS-B provides only coarse Lat / Lon / Alt resolution (±15 ft. horizontal, ±25 ft. vertical) for pilot display. NASA is developing:
  - Wake estimation algorithms to combine ADS-B reported information, probabilistic wake model predictions, and measured steady-state wake effects
  - Wake avoidance algorithms to prevent wake crossings
  - Integration with existing heading and altitude hold autopilot modes

Integration into the NAS

- ACT requires modification of the current FAA minimum separation standards
  - Cooperative trajectories are already used in the NAS – MARSA (Military Assumes Responsibility for Separation of Aircraft)
  - Cooperative trajectory operations are well-aligned with a new FAA initiative for operations from closely-spaced parallel runways

Potential Adverse Impacts

- Loads and fatigue
- Duty cycles on aileron actuators
- Passenger ride quality

Operations

- Pilot training and cockpit displays
- Integration into cargo and passenger operations

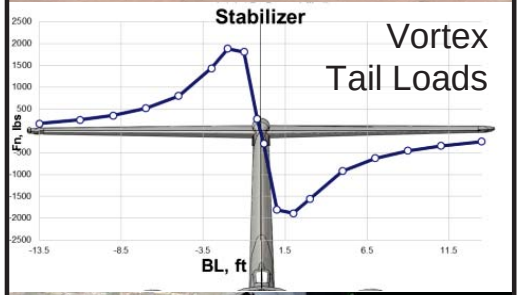

CT G-III HIL Systems Development Lab Simulation

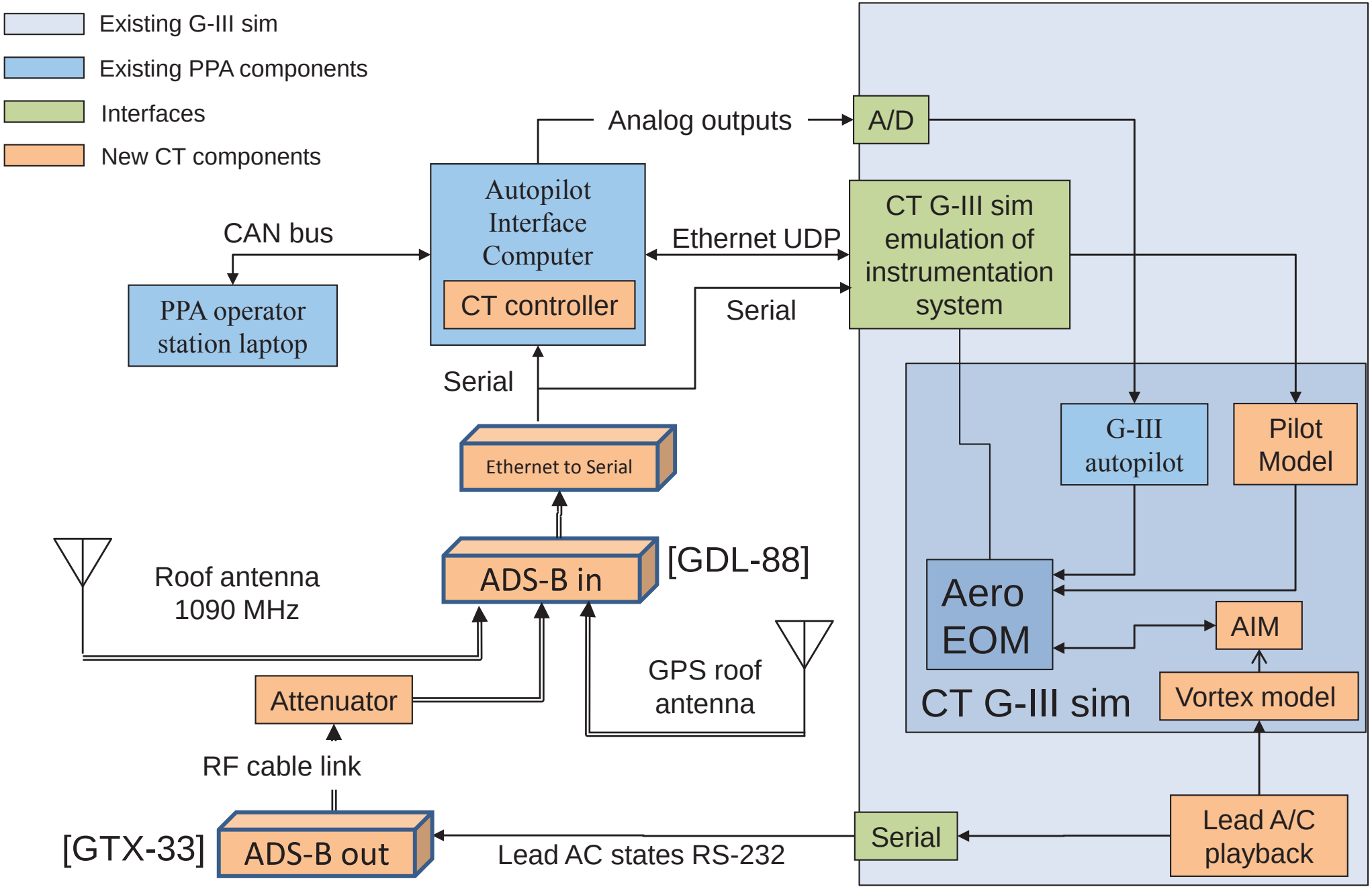

Technology Validation Roadmap

1995 — *German Institute for Fluid Mechanics*

- Proof of concept
- No data link
- 10% power reduction
- Rudimentary peak-seeking control

2001 — *NASA Dryden Flight Research Center*

- Research data link and autopilot
- 14% fuel savings (manual)
- Validated system requirements
- Detailed wake effect mapping

2001 — *US Air Force Test Pilot School*

- Manually flown
- No data link or autopilot
- 9% fuel savings (2-ship)
- Inconclusive 3-ship evaluation

Close Formation Flight Research

2010 — *NASA DFRC / USAF FTC*

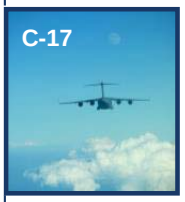

- Proof of extended formation concept
- Production military data link and autopilot
- 7-8% fuel savings (manual)

2012 - 2013 — *DARPA / AFRL / Boeing / NASA DFRC*

- Modified C-17 autopilot
- Production military data link
- 10% fuel savings (autopilot)
- Wake avoidance algorithms

Cooperative Trajectory Flight Research

Partnership between NASA AFRC, ARC, LaRC

- Commercial Data Link (1090 MHz ADS-B In and Out)
- Prototype cooperative trajectory autopilot mode
- Real-time wake estimation and robust wake avoidance

Integrated flight demo

Efficient ACT Routing and Scheduling Tools

Wake Modeling and Advanced Controls

Operational Demonstration with Industry Partners (to be determined)

- Freight carriers, passenger carriers
- Airframers
- Avionics manufacturers

- Commercial Data Link (1090 MHz ADS-B In and Out)
- ACT algorithms integrated with commercial autopilot
- FAA participation (in the NAS)
- Pilot displays and procedures
- Demonstrate scheduling / routing tools
- Candidate trail aircraft:
  - Supplied by an industry partner
  - ecoDemonstrator

Path To Commercially-Viable Automated Cooperative Trajectory Operations

Selected References

Flight Demonstrations

Beukenberg, M. and Hummel, D., "Aerodynamics, Performance and Control of Airplanes in Formation Flight," ICAS Proceedings 1990: 17th Congress of the International Council of the Aeronautical Sciences, September 1990, pp. 1777-1794.

Vachon, J., Ray, R., Walsh, K., and Ennix, K., "F/A-18 Aircraft Performance Benefits Measured During the Autonomous Formation Flight Project," AIAA 2002-4491, Proceedings of the AIAA Atmospheric Flight Mechanics Conference and Exhibit, 2002.

Wagner, G., Jacques, D., Blake, W., and Pachter, M., "Flight Test Results of Close Formation Flight for Fuel Savings," AIAA 2002-4490, Proceedings of the AIAA Atmospheric Flight Mechanics Conference and Exhibit, 2002.

Pahle, J., Berger, D., Venti, M., Duggan, C., Faber, J., and Cardinal, K., "An Initial Flight Investigation of Formation Flight for Drag Reduction on the C-17 Aircraft," AIAA 2012-4802, Proceedings of the AIAA Atmospheric Flight Mechanics Conference, 2012.

Bieniawski, S., Clark, R., Rosenzweig, S., and Blake, W., "Summary of Flight Testing and Results for the Formation Flight for Aerodynamic Benefit Program," AIAA 2014-1457, Proceedings of the 52nd AIAA Aerospace Sciences Meeting, 2014.

Operational Analyses

Xu, J., Ning, A., Bower, J., and Kroo, I., "Aircraft Route Optimization for Heterogeneous Formation Flight," AIAA 2012-1524, Proceedings of the 53rd AIAA Structures, Structural Dynamics and Materials Conference, 2012.

Xue, M., and Hornby, G., "An Analysis of the Potential Savings from Using Formation Flight in the NAS," AIAA 2012-4524, Proceedings of the AIAA Guidance, Navigation and Control Conference, 2012.

Hange, C., "Evaluation of Formation Flight as a Fuel Reduction Strategy Given Real World Flight Dispatching Constraints," AIAA 2013-4390, Proceedings of the 2013 Aviation Technology, Integration and Operations Conference, 2013.

Flanzer, T., Bieniawski, S., and Blake, W., "Operational Analysis for the Formation Flight for Aerodynamic Benefit Program," AIAA 2014-1460, Proceedings of the AIAA 52nd Aerospace Sciences Meeting, 2014.