Cryogenic Propellant Storage and Transfer (CPST) Technology Maturation: Establishing a Foundation for a Technology Demonstration Mission (TDM)

Space 2013 Conference
San Diego California

September 11, 2013

Michael P. Doherty, NASA GRC
Michael L. Meyer, NASA GRC
Susan M. Motil, NASA GRC
Carol A. Ginty, NASA GRC

Agenda

- Cryogenic Propellant Storage and Transfer (CPST) Mission/ Overview
- CPST Summary of FY12-13 Technology Maturation Activities
- Examples of Tests, Studies, and Analytical Tool Development
  - LH2 Active Thermal Control
  - Passive Thermal Control (no discussion here, but details in paper)
  - Liquid Acquisition Device (LAD) Outflow and Line Chill (no discussion here, but details in paper)
  - Performance Modeling/ Analytical Tool Development
  - LOX Zero Boil Off Ground Demonstration
- TRL Status of Critical Technologies
- Results and Concluding Remarks
- Acknowledgements

Cryogenic Propellant Storage and Transfer Technology Demonstration Mission

NASA is undertaking a demonstration mission to advance cryogenic propellant storage and transfer technologies that will enable exploration beyond Low-Earth Orbit

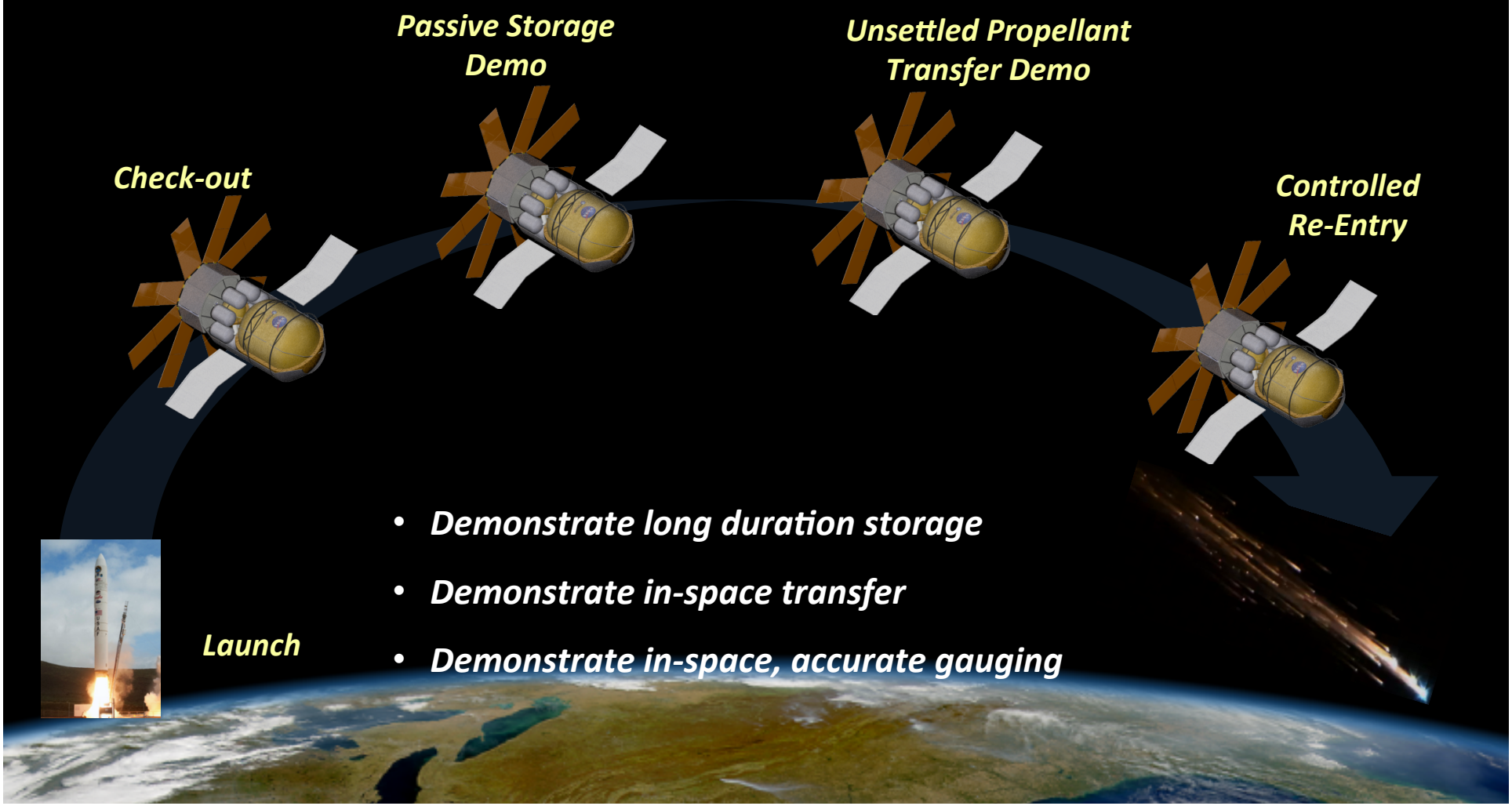

- *Demonstrate long duration storage*
- *Demonstrate in-space transfer*
- *Demonstrate in-space, accurate gauging*

CPST Technology Demonstration Overview

Needs

Create the innovative new space technologies for our exploration, science, and economic future

Goals

Advance cryogenic propellant systems technologies for infusion into future extended in-space mission

Objectives

- Store cryogenic propellants in a manner that maximizes their availability for use regardless of mission duration
- Efficiently transfer conditioned cryogenic propellant to an engine or tank situated in a microgravity environment
- Accurately monitor and gauge cryogenic propellants situated in a microgravity environment

Technologies

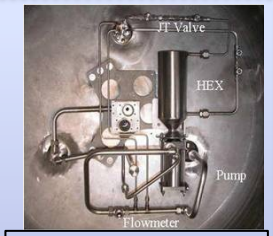

TVS components (installed in test tank)

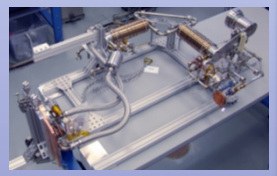

Turbo Brayton cryocooler

LH2 /LO2 Storage

- Passive storage: thick MLI and reduced penetration heat leak
- Passive storage: low conductivity structural attachments
- Active thermal control: Broad Area Cooling (tubes on tank or tubes on shield)
- Active thermal control: cryo-coolers (90K)
- Tank Pressure Control: thermodynamic vent system (TVS)
- Tank Pressure Control: mixing pumps

LH2 /LO2 Acquisition

- Liquid Acquisition Devices (LADs)

Screen Channel Capillary LAD

LH2 /LO2 Transfer

- Transfer Valves
- Line and Tank Chill-down
- Unsettled No-Vent Fill

LH2 /LO2 Quantity Gauging

- Radio Frequency (settled/unsettled)

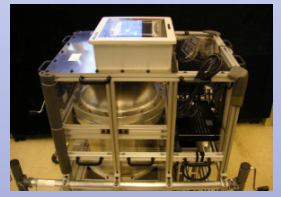

RF Gauge Test Rig

Summary of CPST FY12-13 Technology Maturation

Test Name	Objective
LH2 Active Cooling – Thermal Test (a.k.a. RBO I)	Demonstration of a flight representative active thermal control system for Reduced Boil-Off (RBO) storage of LH2 for extended duration in a simulated space thermal vacuum environment
LH2 Active Cooling – Broad Area Cooling Shield/MLI Structural Integrity (a.k.a.VATA I)	Assess the structural performance of an MLI / BAC shield assembly subjected to launch vibration loads
Active Thermal Control Scaling Study	Conduct study to show relevancy of CPST-TDM active thermal control flight data to full scale CPS or Depot application
(MLI) Penetration Heat Leak	Measurement of heat leak due to strut penetration integrated with MLI
Composite Strut Thermal	Measurement of heat leak to LH2 due to carbon composite strut
Thick MLI Extensibility Study	Assess optimum approach for attachment of thick (40-80 layer) MLI to very large tanks
LAD Outflow & Line Chill	Quantify the LAD stability (no LAD breakdown) due to transfer line chill down transient dynamic pressure perturbations during outflow
Performance Modeling/Analytical Tools	Continue development and validation of tools to support design of CPST-TDM and future NASA exploration mission using cryogenic systems

Related Activities

LO2 Zero Boil-off	Demonstration of a flight representative active thermal control system for Zero Boil-off (ZBO) storage of LO2 (using LN2 as simulant)
Self-Supporting MLI	Validate new MLI concept (led by Game Changing Development w/ CPST support)
RF Mass Gauge	Long lead activities for radio frequency mass gauge
CFD Benchmarking	CFD Modeling assessment activity in partnership with CNES

CPST Technology Maturation in Pictures

LH2 Active Cooling – Thermal Test (RBO) and Acoustic Test (VATA)

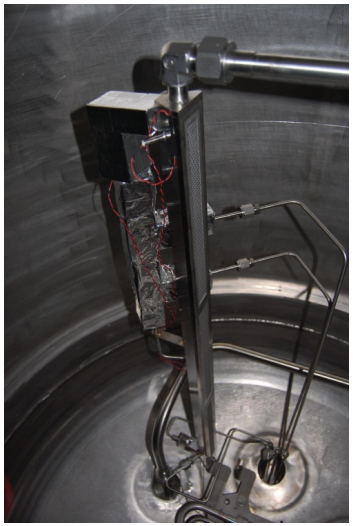

LAD Outflow Test

Sight Glass during Line Chilldown

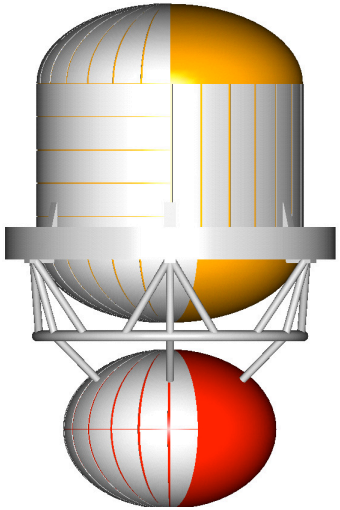

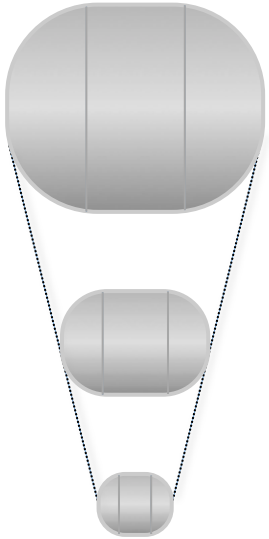

Scaling Studies – MLI and Active Thermal Control

(MLI) Penetration Heat Leak Study

RF Mass Gauging

Composite Strut Study

LH2 Reduced Boil Off I: Technology Maturation

Objectives

- The liquid hydrogen (LH2) active thermal control technology maturation objectives are as follows:
  - Demonstrate through ground testing the integration and performance of a broad area cooled (BAC) shield embedded in tank-applied thick **traditional multi-layer insulation** (tMLI) with a flight representative cryocooler
  - Quantify the system performance of a flight representative active thermal control system for Reduced Boil-Off (RBO) storage of LH2 for extended duration in a simulated space environment

Approach

- Ground test of flight representative test tank, thick (60 layers) **traditional construction MLI** with a 90 K BAC shield after 30 layers; Simulated space vacuum and thermal environment
- Flight representative cryocooler integrated to BAC shield and radiator (cold and hot side tested) Tank supported by flight representative structure: low thermal conductivity struts that are actively cooled

Key Results

- First of its kind demonstration of flight-like reverse turbo-Brayton cycle cryocooler integrated with broad area cooled shield to reduce boil-off of a LH2 storage tank
- Boil-off % reduction was less than expected (48% measured vs. 60% predicted)
- Cooling loop flow losses and BAC shield thermal losses were better than expected
- Lessons learned resulted in improved performance during RBO II test (Spring 2013)

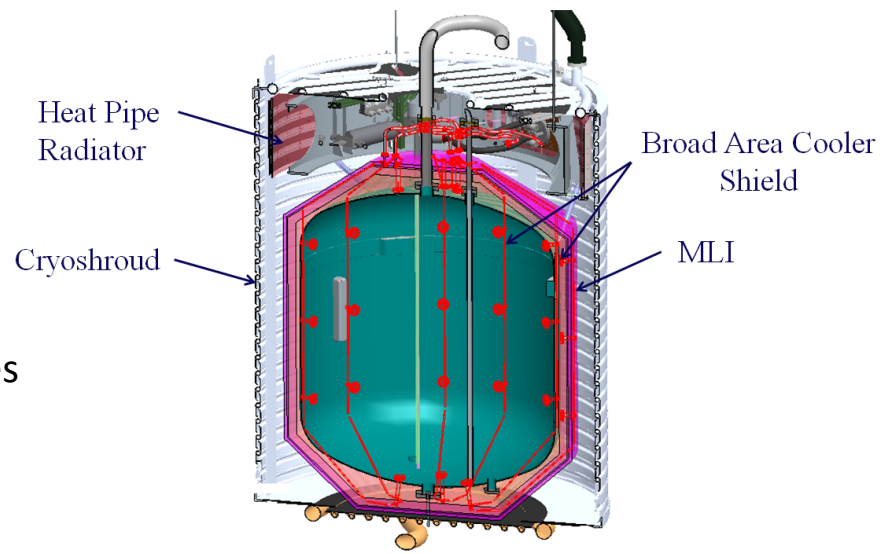

LH2 RBO II: Technology Maturation

Objectives

- Demonstrate the thermal performance of broad area cooled (BAC) shield embedded in tank-applied thick multi-layer insulation (MLI) system comprised of a traditional MLI (tMLI) outer blanket and a **Self Supporting MLI** (SS-MLI) inner blanket attached to the tank foam substrate
- Quantify the system performance of a flight representative active thermal control system with SS-MLI for Reduced Boil-Off (RBO) storage of LH2 for extended duration in a simulated space environment.
- Quantify the performance benefit of the SS-MLI inner blanket (RBO II) versus the tMLI inner blanket (RBO I)

Approach

- Utilized the RBO I test hardware except replacing the tMLI inner blanket with a SS-MLI inner blanket.
- Repeated the RBO I test matrix in a simulated space vacuum and thermal environment

Key Results

- SS-MLI or Load-Bearing MLI (LB-MLI) reduced heat leak 18-27% compared to a traditional MLI
- LB-MLI adequately supported the BAC shield
- LB-MLI survived rapid evacuation testing
- RBO testing advanced the technology of active cooling systems applied to large surface areas

Liquid Hydrogen (LH_2) RBO Experiment Test Article Being Lowered into SMiRF Vacuum Chamber. The white ring above the test tank is the heat pipe radiator, behind which is mounted the reverse turbo-Brayton cycle cryocooler.

Vibro-Acoustic Test Article (VATA) Overview

Test Article Elements

- **Tank:** ASME Stainless Steel Pressure Vessel
  - Same for entire series
- **SOFI:** Stepanfoam S-180 foam
  - Same for entire series
- **MLI:** Reflector and insulator layers
  - Different throughout series:
  - Traditional MLI
    - VATA 1a inner/outer blankets, compressed seams
    - VATA 1b blanket, compressed seams
    - VATA 2a-2c outer blanket, compressed seams
  - Load Bearing MLI
    - VATA 2a-2d inner blanket, interleaved seams
- **Key Results**
  - **VATA 1a and VATA 2a successfully demonstrated two different methods of integrating a passive MLI and and active BAC shield configuration able to survive a worst-case acoustic launch environment and met all test KPPs.**

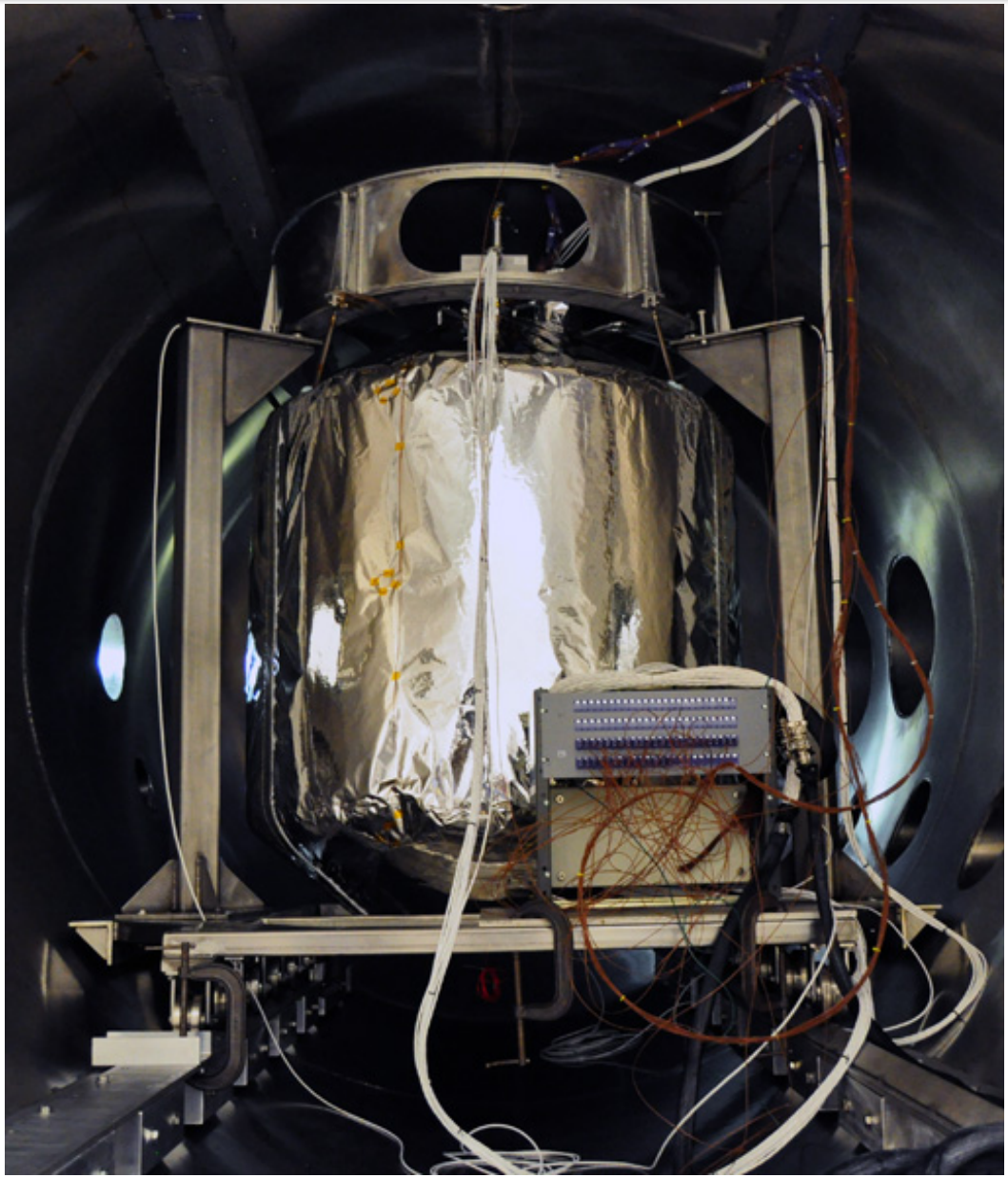

Active Thermal Control Scaling Study - Objectives

- Support technology maturation activities in preparation for an eventual cryogenic fluid management (CFM) technology flight demonstration in 2017
- Determine how current zero boil-off (ZBO) and reduced boil-off (RBO) active thermal control technologies scale up to future mission architectures to address the shortfall that exists between current technology and that needed for future flight missions
  - Incorporate results of CPST technology maturation activities, such as the Reduced Boil-Off (RBO) I and II testing
  - Generate equations in order to perform parametric analyses to understand where passive, RBO, and ZBO designs reduce mass for various mission durations and tank sizes

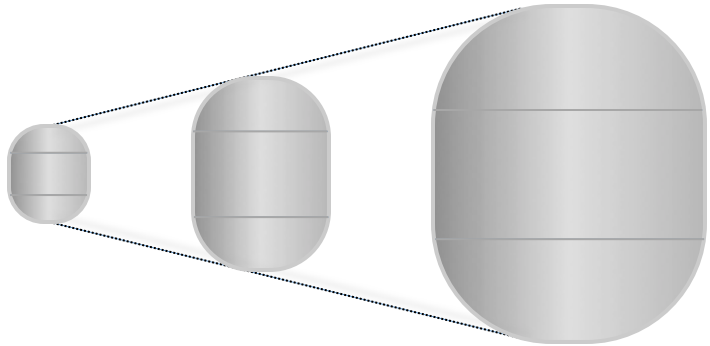

Scaling Example: Thermal Control Strategy Trade Study

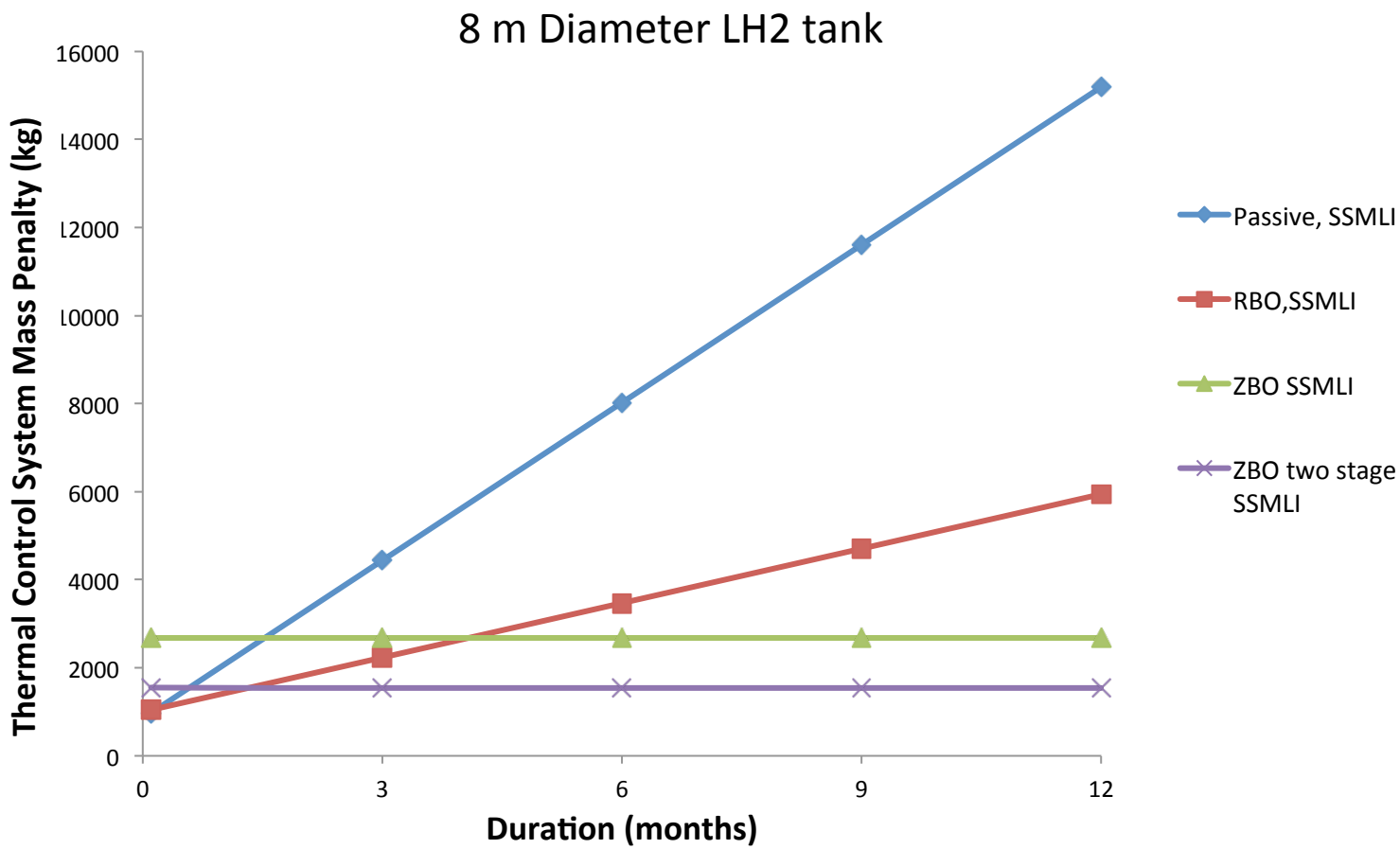

- Mass includes propellant boil-off, MLI, foam, cryocooler(s), radiator, solar arrays
- Use of active thermal control begins to reduce mass for mission durations of a few weeks when compared to passive-only storage
  - Increased tank mass to accommodate boil-off is not included
- While more complex, ZBO 2-stage, with use of a 90K and a 20K cooler, reduces mass long term

Performance Modeling – Summary of Analysis Tools

- **SE-FIT (Surface Evolver- Fluid Interface Tool):** Customized coding and GUI to predict equilibrium liquid/ullage interface shape and location(s).
- **NVEQUI/NVFILL:** In-house heritage (1990s) multinode code for chilldown and no-vent fill analysis. Updated versions are under development.
- **GFSSP (Generalized Fluid System Simulation Program):** In-house generalized multinode code for fluid dynamics and heat transfer.
- **Tank-SIM (Tank System Integrated Model):** In-house multinode code for self-pressurization, pressure-control (axial jet, spray bar) and pressurization.
- **CryoSIM (Cryogen Storage Integrated Model):** Systems level code which implements several in-house modules for predictions of various masses, powers, heat transfer, temperatures. Can be coupled to Thermal Desktop.
- **MLI Ascent Venting/Heating:** In-house out-gas model of mass and temperature within MLI layers from ground hold to vacuum conditions within MLI. Combines continuum and kinetic theory-based models.
- **Thermal Desktop/RADCAD/SINDA/FLUINT**: Commercial codes for thermal analysis of spacecraft/components, and fluid/heat transfer multinode analysis.
- **CFD:** Commercial codes **Flow-3D** and **Fluent**. Supports all mission phases.

Liquid Oxygen Active Cooling Ground Demonstration

- Test Objective(s):
  - Demonstrate ability to control tank pressure using using a 90K flight representative cryocooler and a tube-on-tank cooling network.
  - Quantify the system performance of a flight representative reverse turbo-Brayton cycle cryocooler for Zero Boil-Off (ZBO) storage of LO2 for extended duration in a simulated space environment
- Test Description
  - Liquid Nitrogen will be used as a surrogate fluid for Liquid Oxygen to eliminate risks/costs associated with testing with LO2; testing conducted at elevated pressure to simulate LO2 storage
  - Test article includes the following:
    - Flight representative test tank with circulator tubing stitch welded and epoxied to test tank; thick (75 layer) traditional MLI
    - Cryocooler, radiator, and support ring same as for LH2 Reduced Boil Off testing; test tank is same design, but different tank
    - Simulated space vacuum and thermal environment
- Accomplishments/Progress:
  - Experiment Requirements Document Review held on September 14, 2012. Experiment Design Document signed on January 11, 2013
  - Test article (test tank and MLI) have been. Testing will be conducted in fall 2013.

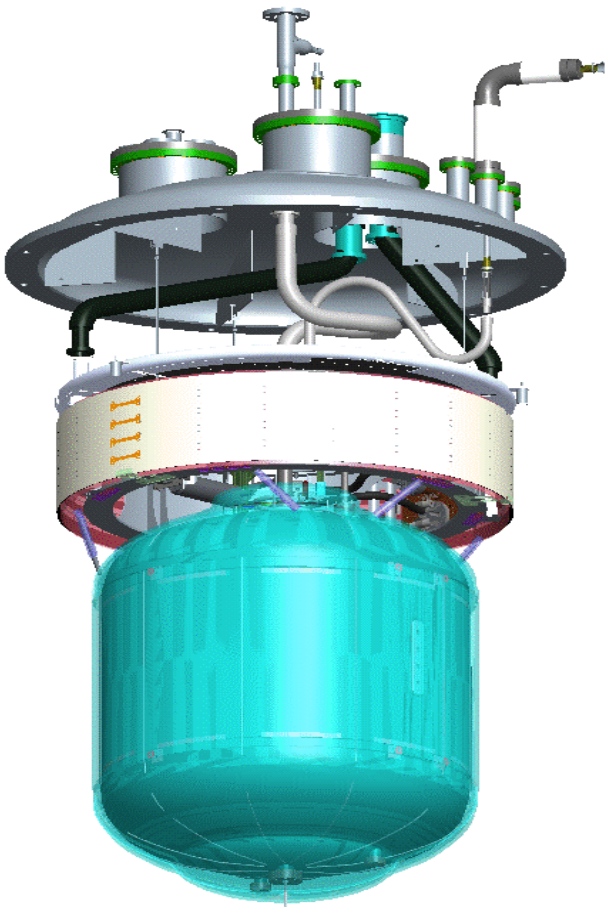

Test article 3-D image of LN2 tank assembled to the support ring, which hangs from the vacuum chamber lid.

TRL Status of Critical Technologies

Category	Subset	CFM Technologies Specific	Initial TRL LH_2/LO_2 (a)	Current TRL LH_2/LO_2 (a)
Long Duration Propellant Storage	Passive Thermal Control	Tank Multilayer Insulation With Foam Substrate	(4/6)/(4/6)	(5/6)/(5/6)
		Low Conductivity Structure/Struts	(4/6)/(4/6)	(4/7)/(4/7)
	Active Thermal Control	Cryocooler Integrated BAC	4/(N/A)	5/(N/A)
		BAC Shield—Tube-on-Tank	3/4	3/4
		BAC Shield—Tube-on-Shield	4/(N/A)	5/(N/A)
	Micro-g Pressure Control	Thermodynamic Vent System (TVS)	5/5	4/4
		Fluid Mixer	5/5	5/5
Liquid Transfer	Settled/Unsettled	Micro-g Transfer Line Chilldown	4/4	5/5
		Micro-g Receiver Tank Chilldown	5/5	4/4
		Pressurization Systems	5/5	5/5
		Tank-to-Tank Transfer	5/5	5/5
Liquid Supply	Unsettled Liquid Acquisition Devices	Bubble Point Pressure (BPP) Measurement	(4/5)/5	5/5
		LAD Outflow	4/5	5/5
	Propellant Positioning Using External Forces	Linear Acceleration	9/9	9/9
Instrumentation	Mass Gauging	Settled Mass Gauging: Point sensors	9/9	9/9
		Unsettled Mass Gauging: RF gauging	5/5	5/5

(a): Range of TRL indicates more than one technology approach.

Indicates change due to Technology Maturation.

Technology intended for Flight Demonstration.

Non-CPST maturation or changed in assessment.

Notable Results, Including "Firsts" (1/2)

- **Successful Technology Maturation to provide a foundation for NASA Space Technology Mission Directorate's (STMD's) Cryogenic Propellant Storage and Transfer - Technology Demonstration Mission (CPST-TDM)**
- Successful experimental evaluation of thermal losses associated with MLI and penetrations, including options to minimize degradation to the bulk MLI from the penetration.
- Successfully completed a "first of its kind" demonstration of flight-representative Reverse Turbo-Brayton Cycle (RTBC) cryocooler integrated with Broad Area Cooled (BAC) shield to reduce boil-off of a LH2 storage tank, including a direct coupling of the radiator to the RTBC.
- "First of its kind" to demonstrate a tank-applied integrated MLI and BAC shield configuration able to survive a worst-case acoustic launch environment, meeting all test Key Performance Parameters.
- Active Thermal Control Scaling study concludes that there are substantial mass savings for large cryogenic upper stages or depots faced with moderate loiter periods when including Reduced Boil Off (RBO) and Zero Boil Off (ZBO) systems.

Notable Results, Including "Firsts" (2/2)

- Successful demonstration of tank liquid acquisition with a screen channel device (LAD) and transfer line chill down technologies in liquid hydrogen.
- Furthered the development and validation of fluid dynamics and thermodynamics analytical tools for design of TDM CPST and future NASA exploration missions using cryogenic systems.
- Completed environmental testing of prototype Radio Frequency Mass Gauge critical components, and developing custom circuit board for unsettled mass gauging.
- Demonstrated via testing a more effective (lower power input) settled LH2 wet-dry mass gauging using Cernox sensors.
- **Successful collaboration with NASA STMD/Game Changing Development to utilize existing hardware assets to conduct thick MLI/Reduced Boil Off thermal and structural testing to gain directly comparable data for SSMLI vs. traditional MLI performance.**

Concluding Remarks

We have completed a successful Technology Maturation Phase of the Project

- The paper discusses additional test and analysis work that was only noted in the presentation.
- A technological foundation of knowledge, skills, capabilities (in short, "know-how") has been laid that:
  - provides a backbone for embarking on the TDM CPST flight to test and validate key cryogenic capabilities and technologies,
  - to open up a much more capable architecture for large cryogenic propulsion stages and propellant depots to extend human and robotic presence throughout the solar system.

We are now ready to proceed into flight system development.

Acknowledgments

The authors are deeply appreciative of the efforts of the NASA-wide CPST Technology Maturation Team and supporting contractors (over **170 individuals contributed from 5 NASA Centers (ARC, GRC, GSFC, KSC, and MSFC**). Without their passion and dedication, the accomplishments, noted herein, would not have been possible. Their contributions have been recognized by the Agency in the form of the 2013 NASA Group Achievement Honor Award.

Michael P. Doherty, Science and Technology Manager, CPST-TDM
Michael L. Meyer, Lead Technologist, CPST-TDM
Susan M. Motil, Project Manager, CPST-TDM
Carol A. Ginty, Deputy Project Manager, CPST-TDM