National Aeronautics and Space Administration

Engine Icing Accretion Simulation

William Wright
ASRC Aerospace

2011 Annual Technical Meeting
May 10–12, 2011
St. Louis, MO

Outline

- Motivation
- Introduction to Engine Analysis Tools
- GlennICE Model
  - Particle Energy Balance
  - Surface Impact Behavior
  - Surface Energy Balance
- Empirical Models
- Test Case
- Future Work

Motivation and Technical Challenges

- Several incidents where engine icing is suspected (Mason 2006)
- User request for mixed phase capability
- Prior LEWICE versions did not include:
  - Change in droplet size, phase or temperature
  - Differences in solid impact dynamics versus liquid impacts
  - Changes to energy and mass balance equations

Hypothesis of the Environment that Causes Engine Events

- Ambient temperature between 0 to -50 ° C
- Altitude above 11500 ft. to at least 39000 ft
- Temperature can be as much as 25 ° C above ISA
- Environment is dominated by ice crystals as high as 10 g/m^3 with particle size < 100 microns
- Very little, or no, ambient liquid water content required for ice accretion
- Light radar reflectivity

GlennICE

- **Grid Generation**
  - Use SmaggIce to generate 2D surface grids for panel model or 2D multi-block structured grids for Naviér-Stokes model
- **Flow Solver**
  - Use potential flow code (S24Y) or use structured Naviér-Stokes solver (e.g. WIND) to determine flow field
- **Water Collection**
  - Determine water droplet impact location pattern by successive calculation of individual droplet trajectories
- **Heat Transfer**
  - Perform mass and energy balance
    - Several different formulations available
- **Ice Growth**
  - Density correlations used to convert ice growth mass into volume
  - Geometry changed by moving surface geometry normal to surface
- **Iterate**
  - With new ice shape, iterate entire sequence

Engine and Compression System Modelling and Simulation

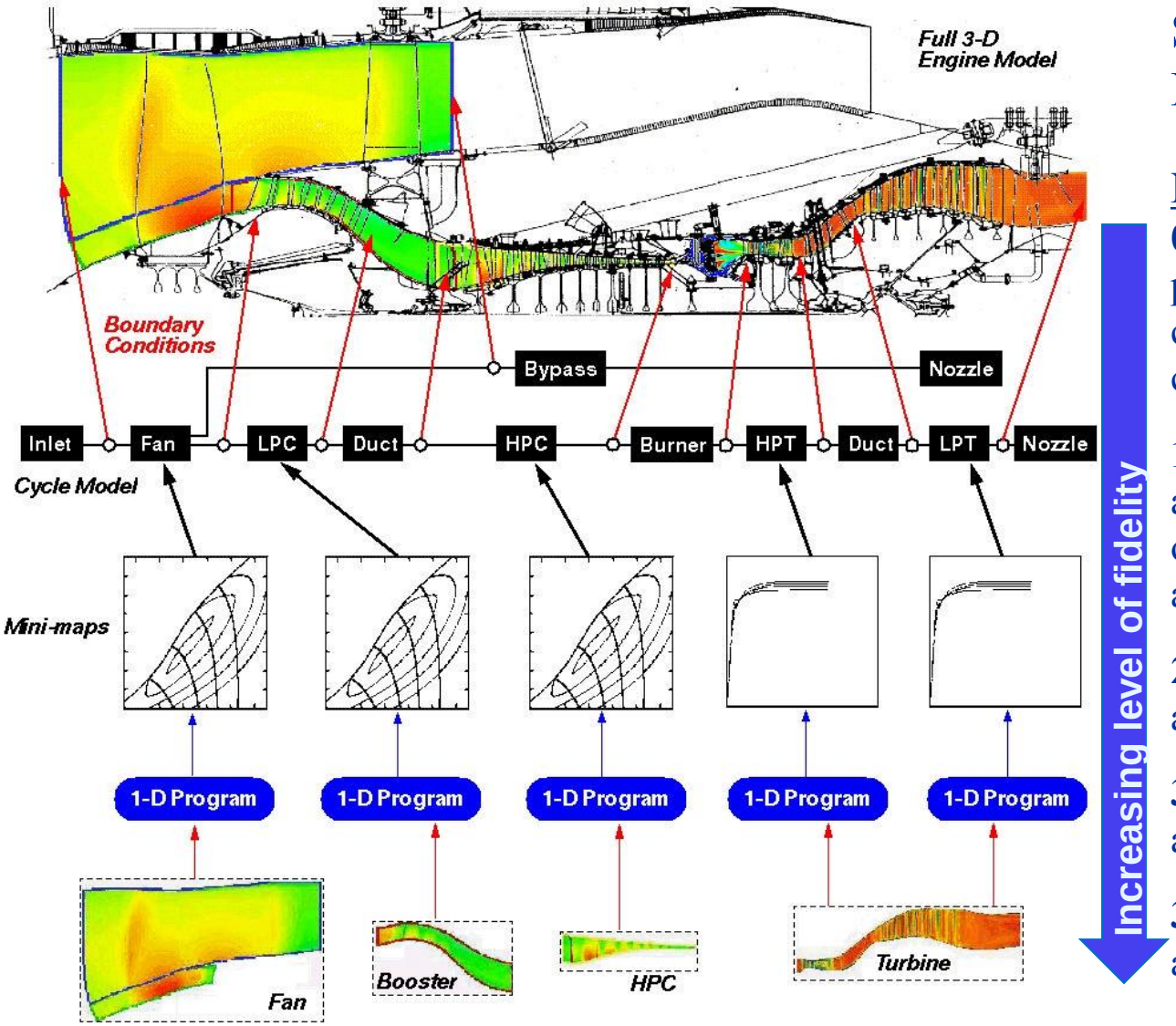

Simulation Levels of Fidelity

NPSS Model of Engine

0-D Engine system performance to establish compressor BC's at altitude cruise icing conditions

1-D Compression system analysis to determine location of blade row where icing can accrete.

2-D Compressor aero with and without ice blockage

3-D Detailed CFD with iced accretion on blade geometry

3-D Multi-disciplinary blade aero-heat transfer analysis

Effect of ice crystal particles with air

Does ice particle shape matter?
What are the drag differences?
How does particle temperature and phase change affect the solution?
Is a coupled solution necessary?

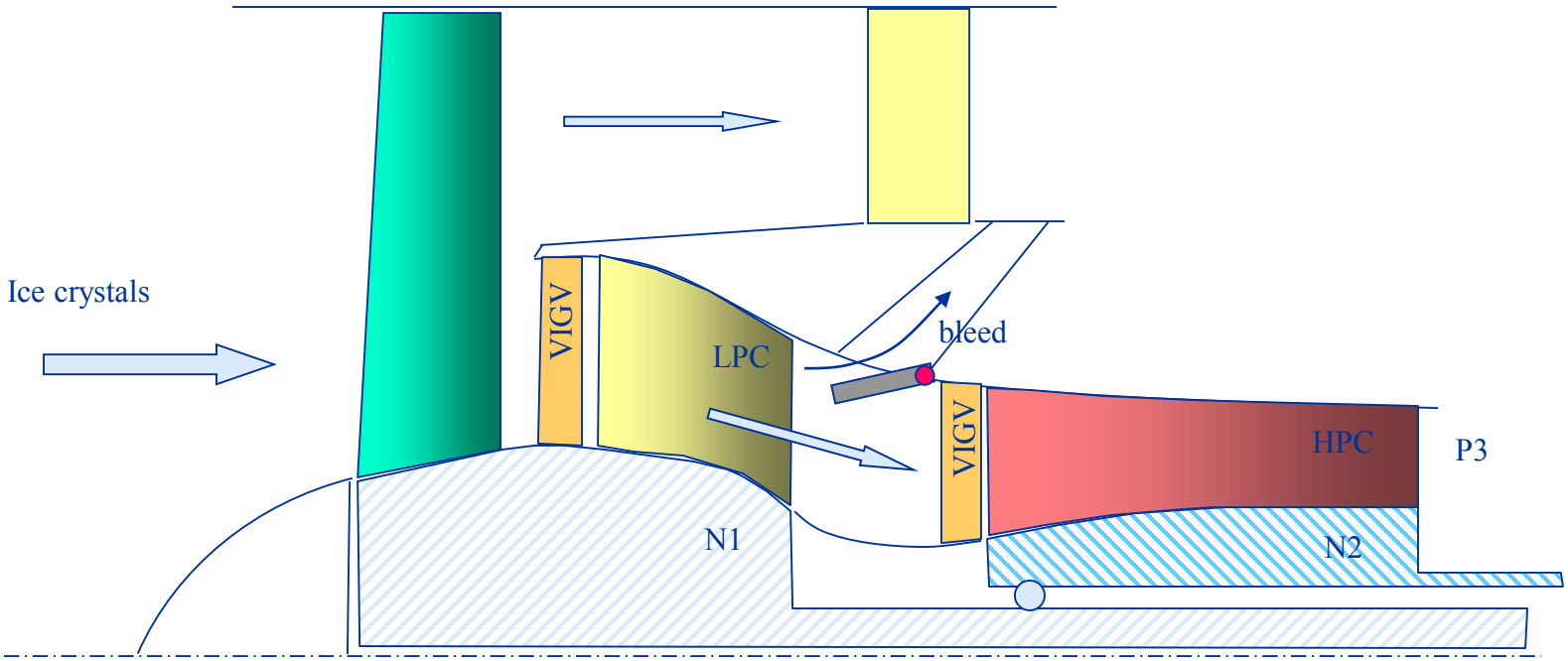

Particle Drag

- **Spheres**

$$C_d = \frac{24}{\mathrm{Re}} + 0.4 + \frac{6}{1+\sqrt{\mathrm{Re}}}$$ ➢ For Re < 100

$$C_d = \frac{24}{\mathrm{Re}} + 0.3 + \frac{6}{1+\sqrt{\mathrm{Re}}}$$ ➢ For Re > 100

- **Cylinder**

$$C_d = 4.194\,\mathrm{Re}^{-0.931}$$ ➢ For Re < 0.01

$$C_d = 13.344\,\mathrm{Re}^{-0.691}$$ ➢ For 0.01 < Re < 20

$$C_d = 3.2344 - 0.334\log(\mathrm{Re})$$ ➢ For 20 < Re < 1000

$$C_d = 0.93$$ ➢ For Re > 1000

- **Discs**

$$C_d = \frac{24}{\mathrm{Re}} + 0.4 + \frac{6}{1+\sqrt{\mathrm{Re}}}$$ ➢ For Re < 40

$$C_d = 1.5 * 10^{-6}\,\mathrm{Re}^2 + 0.001\mathrm{Re} + 1.8176$$ ➢ For 40 < Re < 1000

$$C_d = 0.93$$ ➢ For Re > 1000

Particle Energy Balance

- **Prior to phase change (ice particles)**

$$\frac{dT}{dt} = \frac{Nu}{2\tau_t}(T_a - T) + \frac{Sh}{2\tau_t}\frac{\Pr}{Sc}\frac{L_{sub}}{C_{p,i}}(\omega_a - \omega)$$

- **During phase change (melting)**

$$\frac{d\eta}{dt} = \frac{Nu}{2\tau_t}\frac{C_{p,i}}{L_f}(T_a - T) + \frac{Sh}{2\tau_t}\frac{\Pr}{Sc}\frac{L_{sub}}{L_f}(\omega_a - \omega)$$

- **After phase change (water droplets)**

$$\frac{dT}{dt} = \frac{Nu}{2\tau_t}(T_a - T) + \frac{Sh}{2\tau_t}\frac{\Pr}{Sc}\frac{L_{evap}}{C_{p,i}}(\omega_a - \omega)$$

Heat and Mass Transfer Correlations

- **Spheres**

$$Nu = 2 + 0.6\,\mathrm{Re}^{1/2}\,\mathrm{Pr}^{1/3} \qquad Sh = 2 + 0.6\,\mathrm{Re}^{1/2}\,Sc^{1/3}$$

- **Cylinders**

$$Nu = 0.3 + 0.62\,\mathrm{Re}^{1/2}\,\mathrm{Pr}^{1/3}\,\frac{\left(1+\left(\frac{\mathrm{Re}}{2.82*10^{-5}}\right)^{0.625}\right)^{0.8}}{\left(1+\left(\frac{0.4}{\mathrm{Pr}}\right)^{2/3}\right)^{1/4}} \qquad Sh = 0.3 + 0.62\,\mathrm{Re}^{1/2}\,Sc^{1/3}\,\frac{\left(1+\left(\frac{\mathrm{Re}}{2.82*10^{-5}}\right)^{0.625}\right)^{0.8}}{\left(1+\left(\frac{0.4}{Sc}\right)^{2/3}\right)^{1/4}}$$

- **Discs**

$$Nu = 0.664\,\mathrm{Re}^{1/2}\,\mathrm{Pr}^{1/3} \qquad Sh = 0.664\,\mathrm{Re}^{1/2}\,Sc^{1/3}$$

Coupling Analysis

- **Mass coupling**

$$\frac{6 * IWC * L * Sh * D_{a,i}(\omega - \omega_a)}{\rho_i V_i d^2} < 1$$

» Mass coupling is not needed

- **Momentum coupling**

$$\frac{IWC}{\rho_a\left(1 + \frac{\rho_i d^2 V_i}{18 \mu_a L}\right)} < 1$$

» Momentum coupling is not needed

- **Energy coupling**

$$\frac{6 * IWC * L * Sh * D_{a,i}(\omega - \omega_a) L_{sub}}{\rho_i V_i d^2 C_{p,i} T} < 1$$

» Energy coupling is not needed

Particle Impact Analysis

Do ice particles stick or bounce off?
What is the coefficient of restitution?
Do ice particles fracture on impact?
Do ice particle impacts erode an existing ice shape?
What is the variation of ice fracture strength with temperature?
With materials and surface finish?

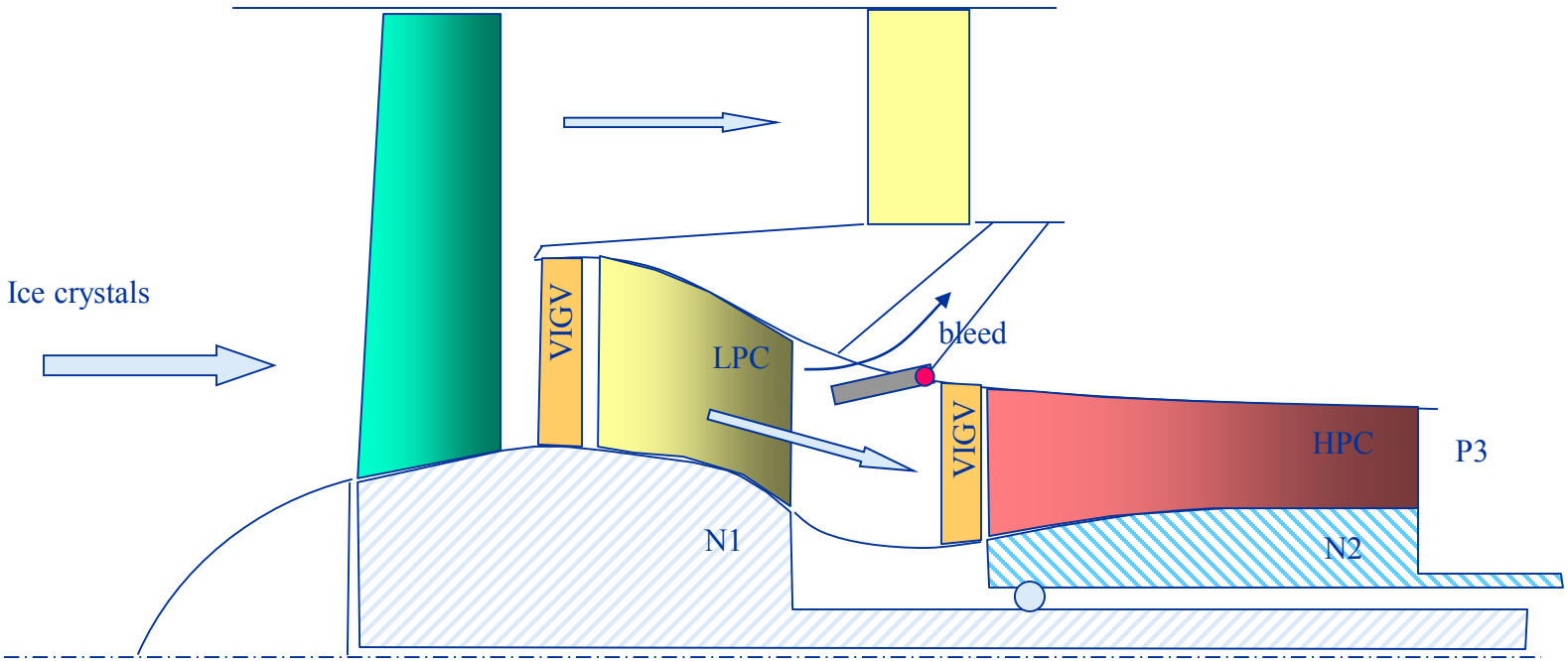

Coefficient of Restitution

- **Ice particles fracture on impact**
- **Almost all of the energy and mass is transferred to surface**

$$r = \left(\frac{V}{V_c}\right)^{-\log\left(\frac{V}{V_c}\right)}$$

Critical Velocity (cm/s)	Temperature (K)
25	269
35	261
61	245

Ice Erosion

- **Empirical model based on extremely limited amount of data**
- **Relationship with icing variables estimated**

$$\frac{\dot{\varepsilon}}{\dot{\varepsilon}_t} \approx \left(\frac{d}{d_t}\right)^2 \left(\frac{V}{V_t}\right)^2 \left(\frac{IWC}{IWC_t}\right)^{1/3} \left(\frac{\exp\left(14 - \frac{Q}{RT}\right)}{\exp\left(14 - \frac{Q}{RT_t}\right)}\right)$$

$$erosion = 0.08\left(\frac{\dot{\varepsilon}}{\dot{\varepsilon}_t} - 1\right)$$

Accretion on sub-freezing metal surfaces

It has been demonstrated that ice crystals bounced off sub-freezing surface shaped like wing leading edge, how about large stagnation regions like the turn inside a scoop?
Can ice crystals accrete in large stagnation regions without liquid water?
Where is the probable source of water in this zone?
Would an anti-iced stage upstream be responsible for the recreation of liquid water ?

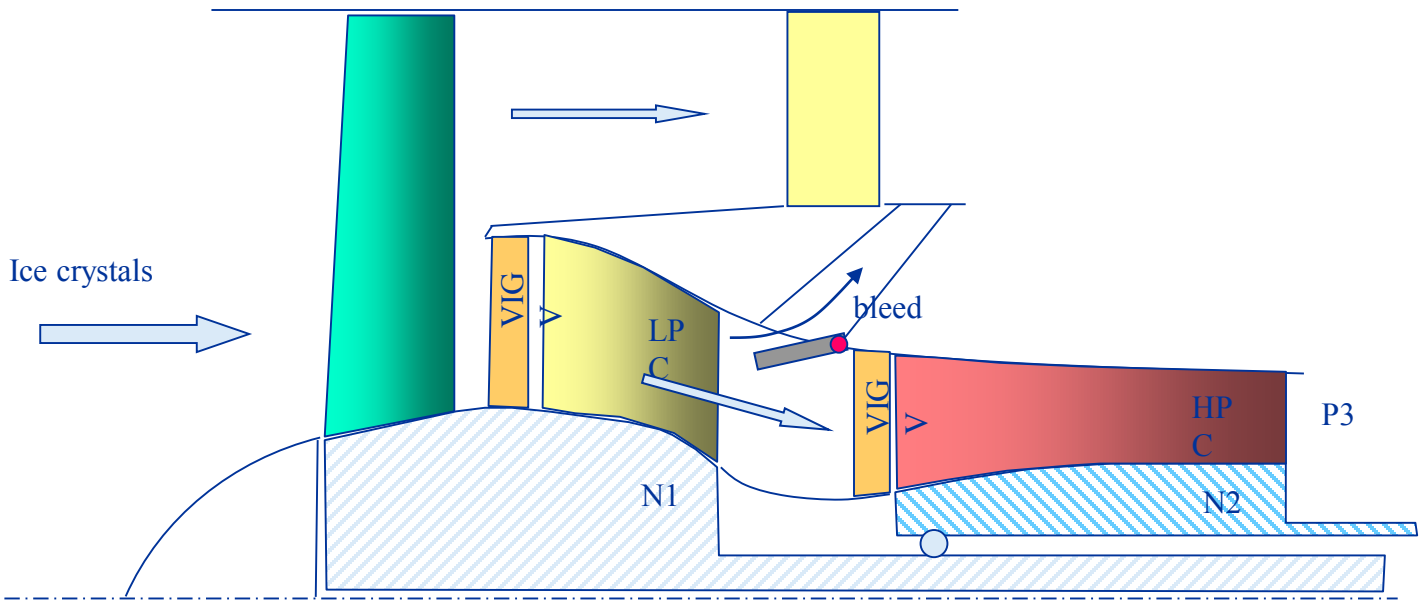

Accretion on above-freezing metal surfaces

How long of a contact time is needed for heat exchange between ice particles and a metal surface?
What is the particle melting mechanism?
Does the pressure & temperature rise across a stage play a role in melting? (rotating rig)
Does evaporation and sublimation and erosion play a role during accretion?

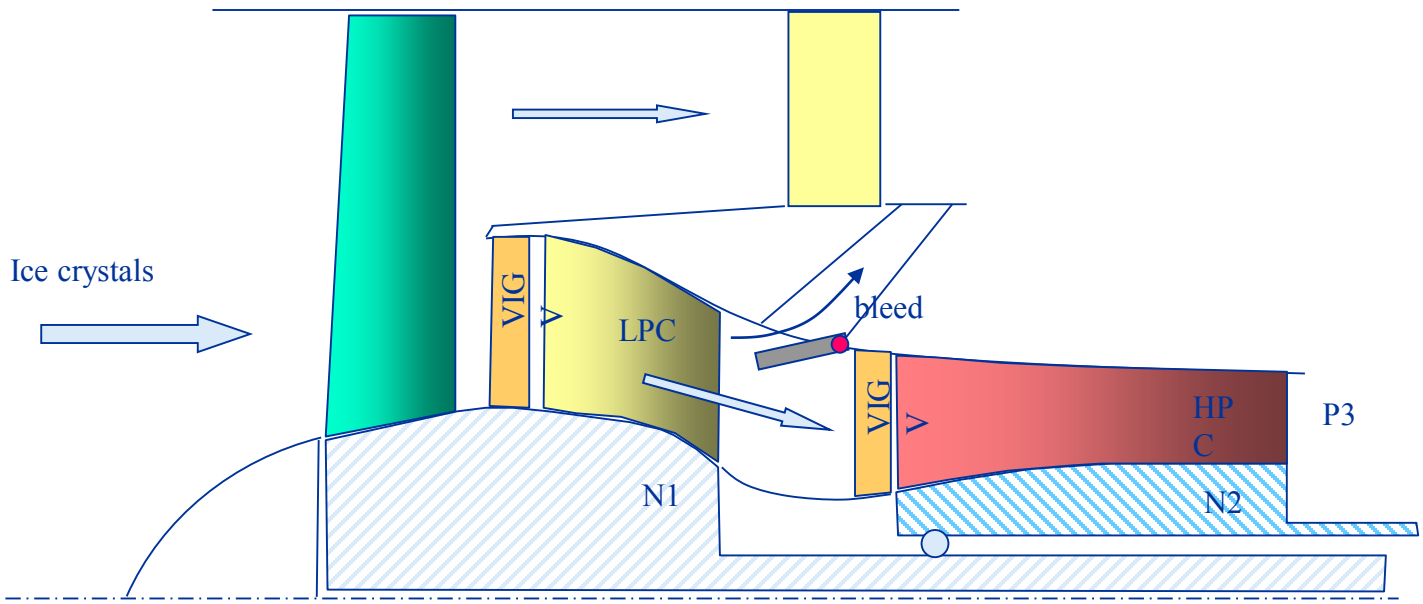

Accretion on above-freezing metal surfaces

Do melted particles create a film or rivulets?
Does this film experience centrifugal forces?
How thick a film is needed to capture ice particles?
Is there film splashing due to ice impact?
Is water film on ice particle important to the ice accretion process?
Would an anti-iced stage upstream be responsible for the recreation of liquid water ?

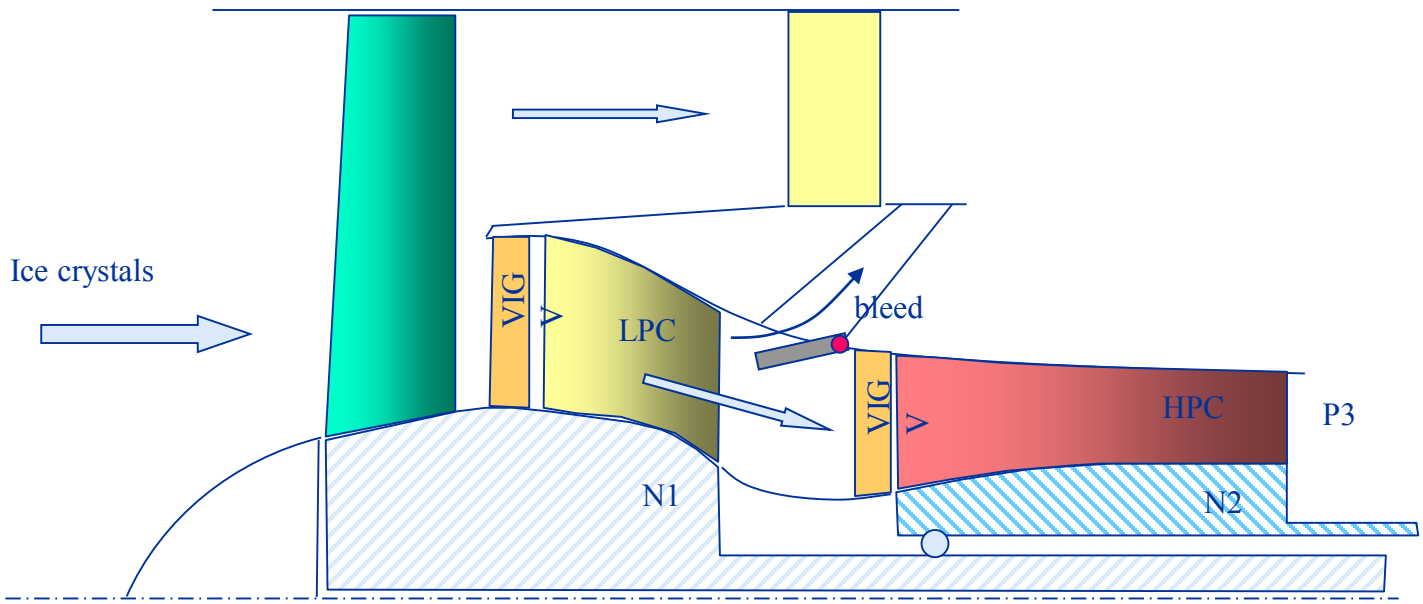

Mechanism of glaciated ice accretion inside engine core

- Exact mechanism is not known, only a hypothesis exists
- In the mixed phase/glaciated ice cloud, large amount of ice crystals are scooped into the core of the engine
- Liquid water is also present in the core either being ingested from the atmosphere or generated upstream due to melting of small ice particles
- Presence of liquid on an engine component surface slows down the ice crystals allowing heat transfer to take place between the ice and the metal
- Heat removed from the metal reduces its temperature until freezing point is reached
- Further liquid and ice impingement will continue to accrete on the component until self shedding or engine anomaly occurs

Mass and Energy Balance

- **Added term for mass of ice impingement**

$$\dot{m}_{imp,i} = (1 - erosion)(1 - r)\beta_i IWCV$$

- **Added kinetic energy from ice impacts**

$$q_{KE,i} = \frac{1}{2}\dot{m}_{imp,i}V_{imp}^2(1 - r)$$

- **Added melting of ice crystals**
- **Remove accreted mass from ice impacts if energy balance does not produce a liquid film**
  - **Melting ice**
  - **Impinging water**

E^3 Test Case

- Energy efficient engine (E^3) is a publicly available design for preliminary analysis
- Section analyzed is from fan to entrance of the high-pressure compressor

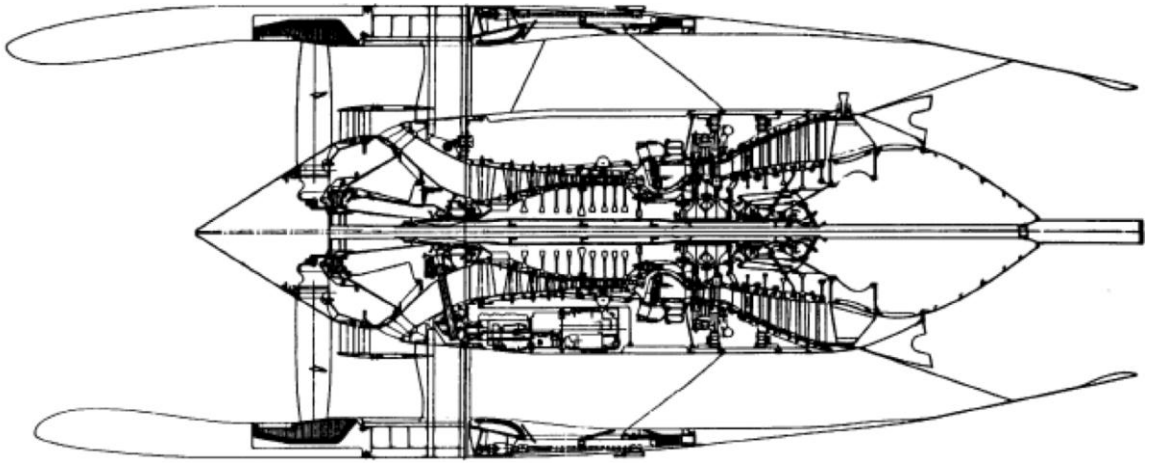

Fan and Quarter-Stage/Booster

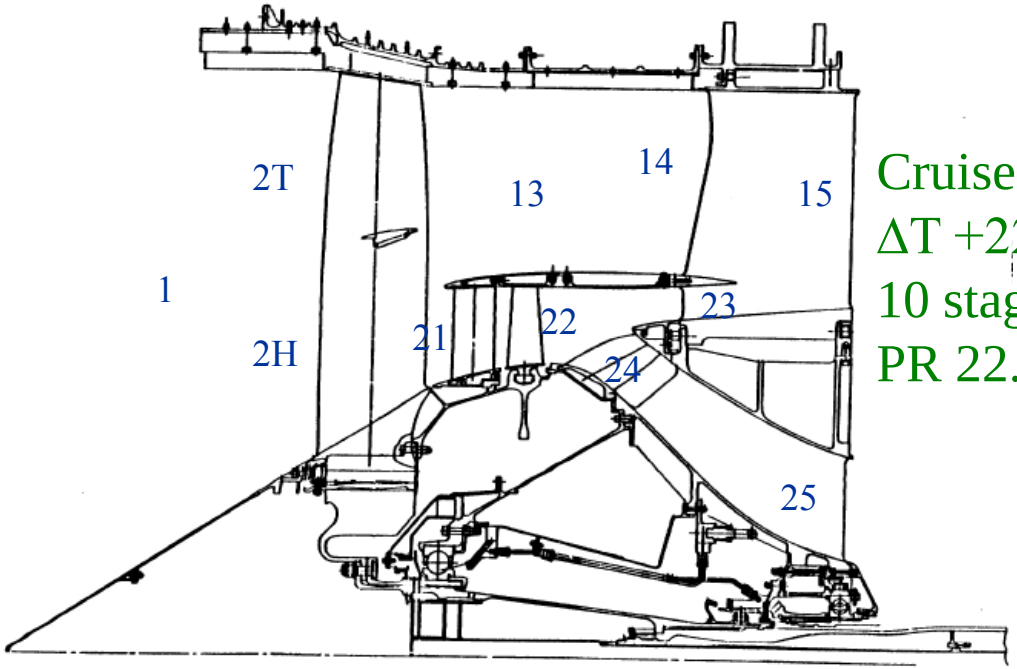

Cruise condition @39,000 ft,
ΔT +22R, 80% max thrust
10 stage HPC
PR 22.4

Station	T(R)	P(psia)	Mach	V(mph)	W(lbm/s)
1	462.2	4.27	0.78	776.4	1313.3
2	462.2	4.27	0.57	580.2	1313.3
2T	462.2	4.27	0.57	580.2	1017.5
2H	462.2	4.27	0.57	580.2	295.8
21	513.3	5.94	0.48	520.0	224.0
22	530.7	6.67	0.48	534.6	202.8
23	530.7	6.67	0.48	534.6	96.6
24	530.7	6.67	0.21	240.0	106.2
25	530.7	6.67	0.40	439.8	106.2
13	527.4	6.47	0.46	502.5	716.3
14	527.4	6.47	0.48	526.1	716.3
15	527.4	6.50	0.48	531.4	813.0

Total Temperature Range for Flight Envelope

- **Engine operating point in cruise at 39000 ft was selected for testing GlennICE**

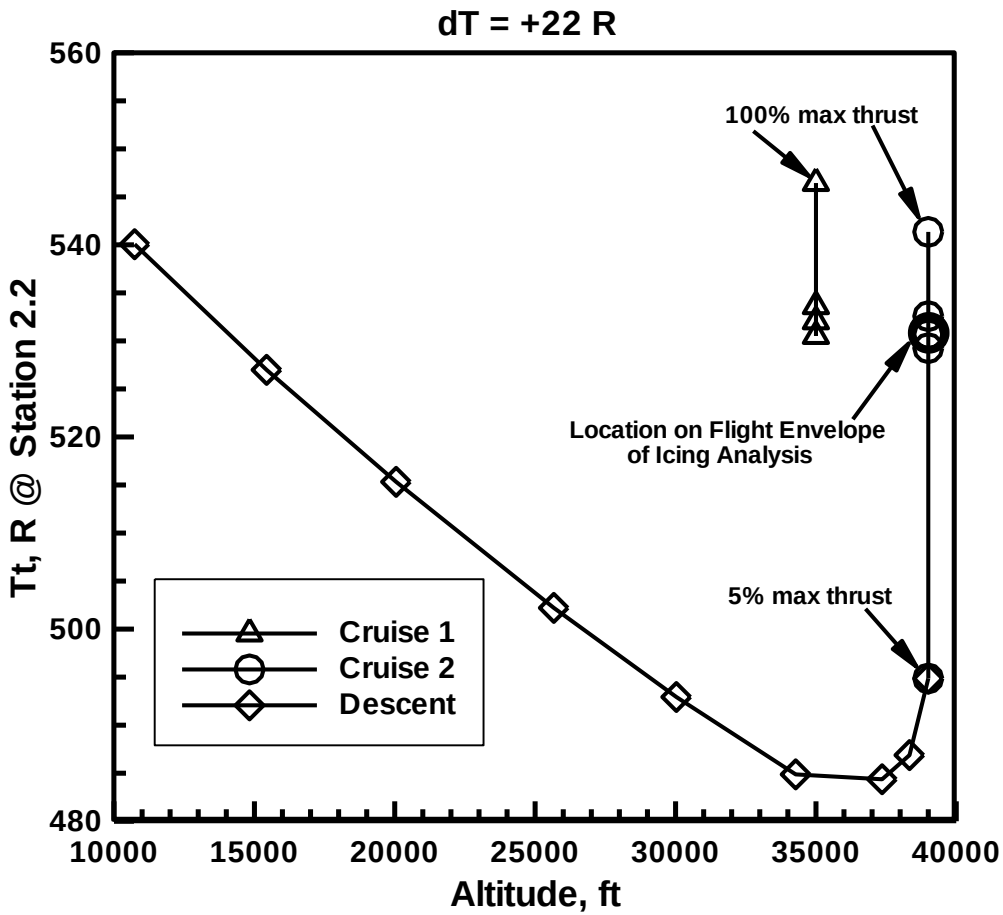

Fan Hub and Quarter Stage Performance Map

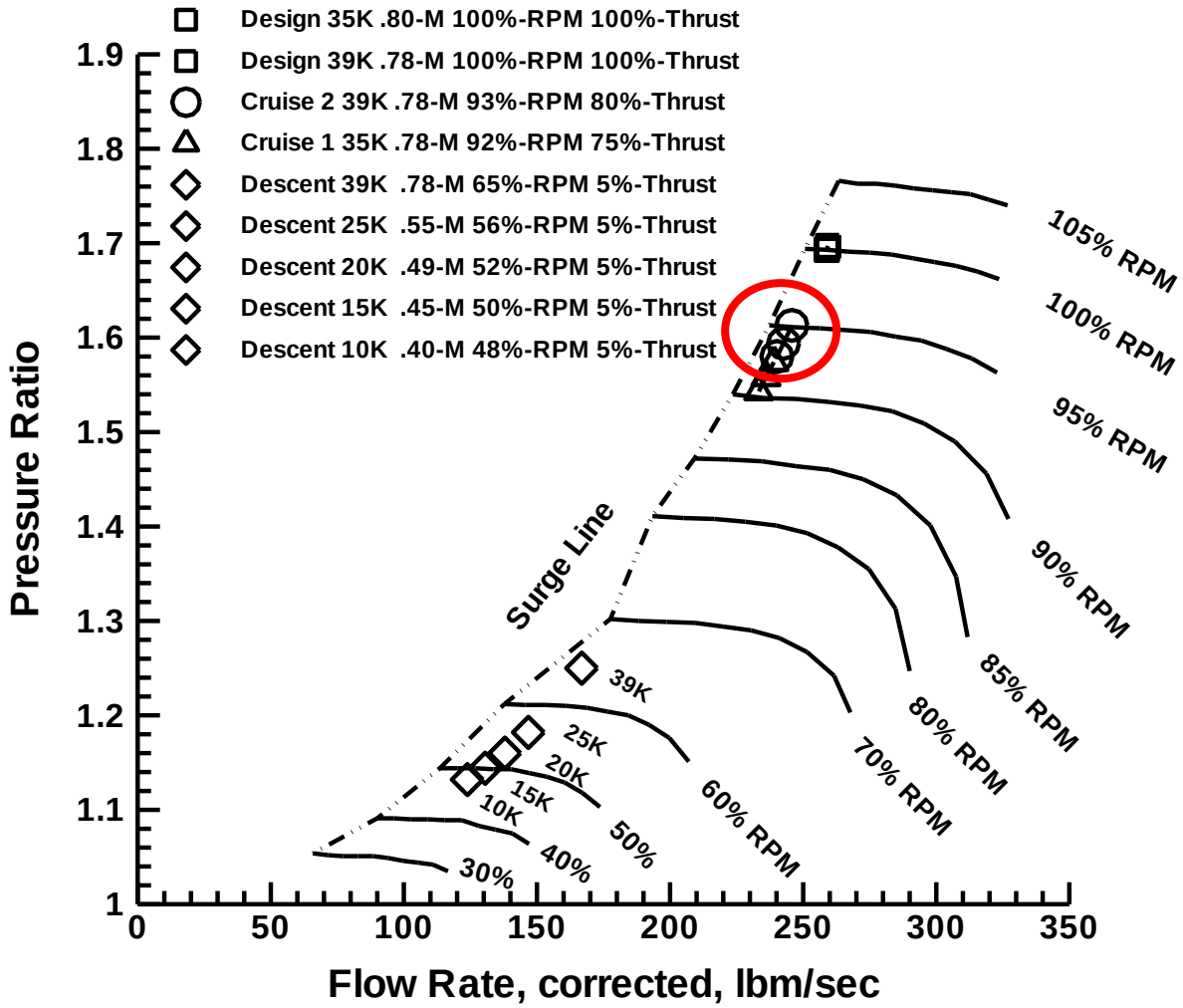

Ice Collection Efficiency on First Splitter

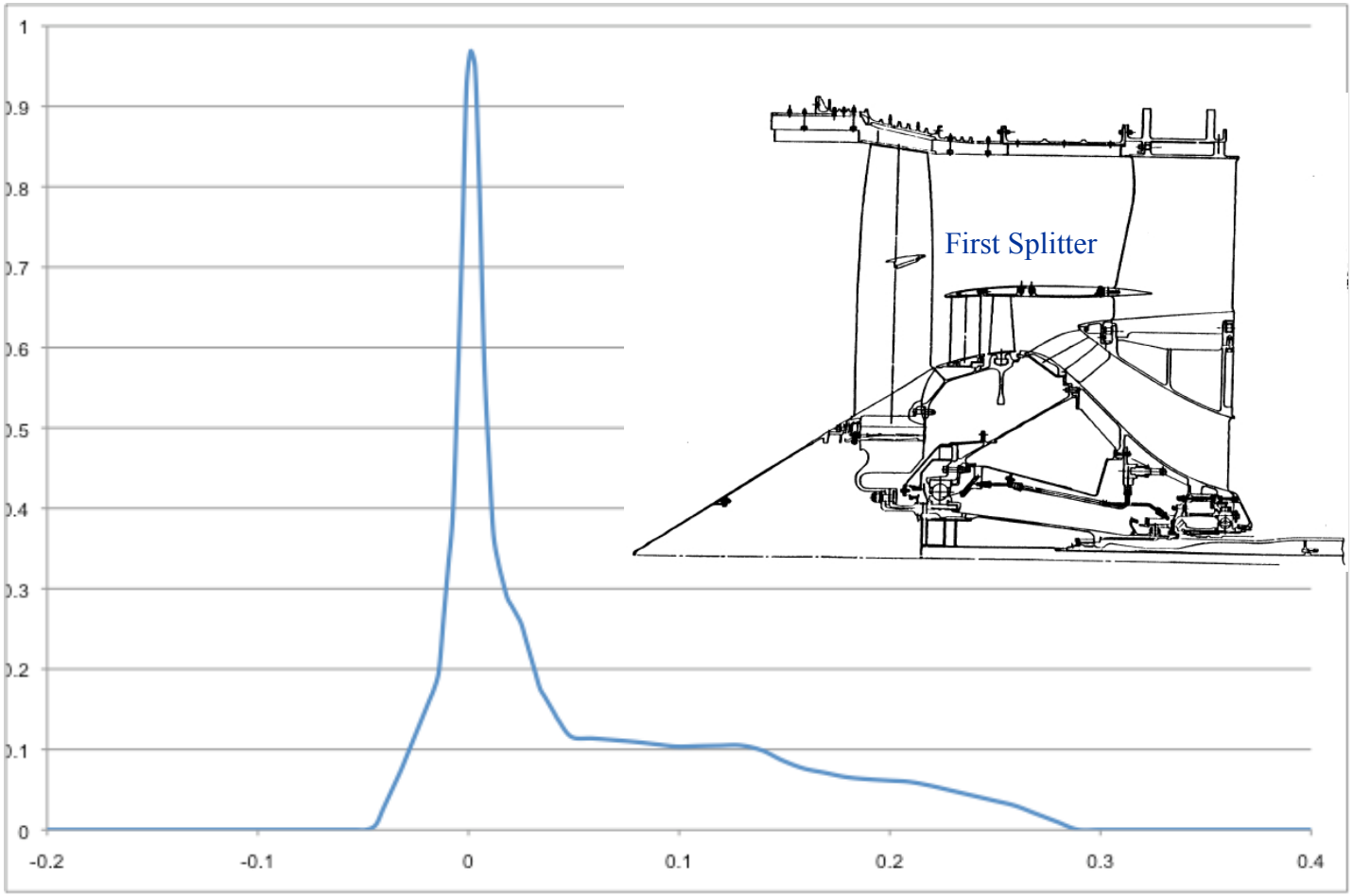

Ice Shape Assuming No Erosion

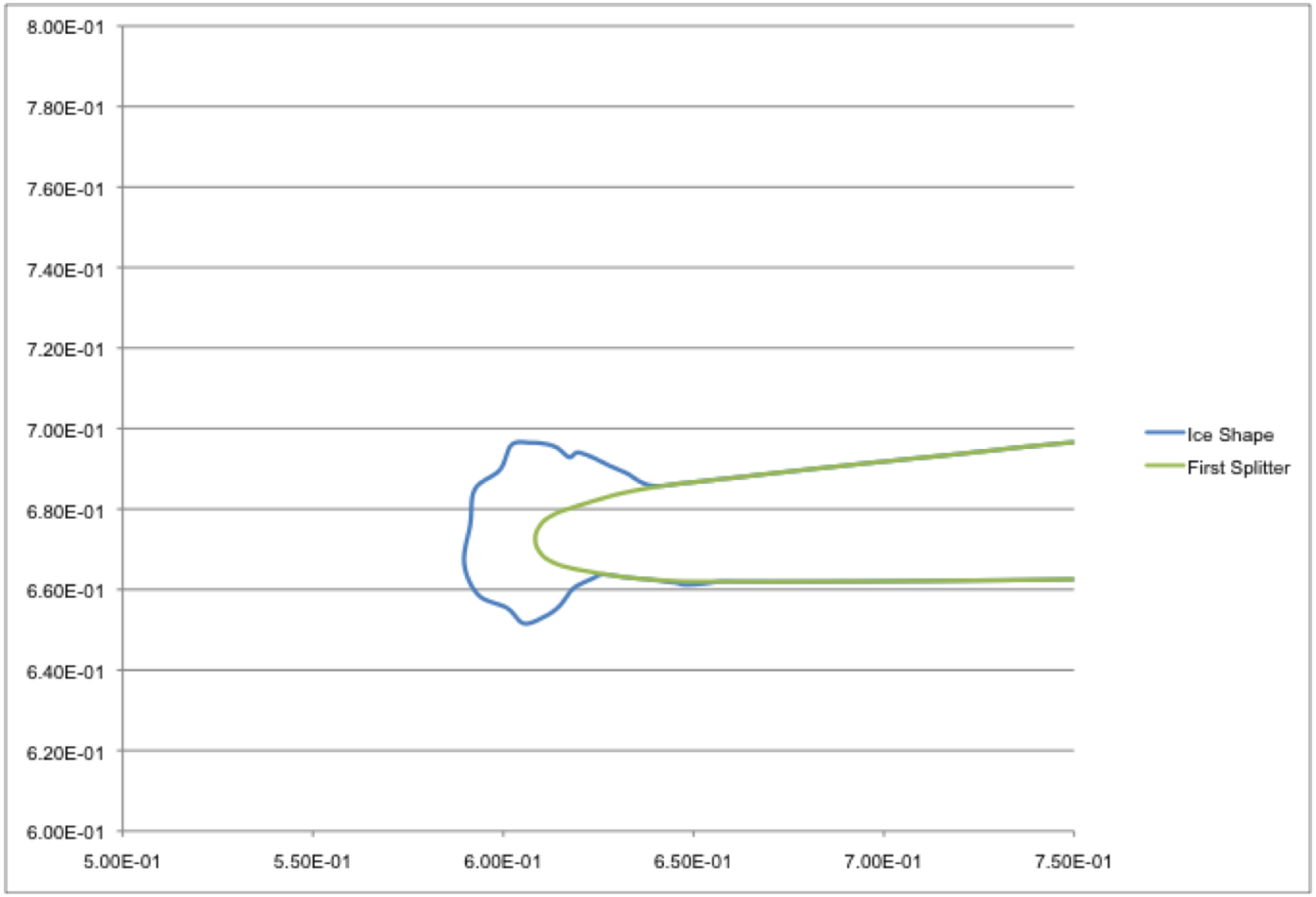

40k Thrust Engine Test Case

- Single splitter case more typical of current engine designs
- Section analyzed is from fan to entrance of the high-pressure compressor

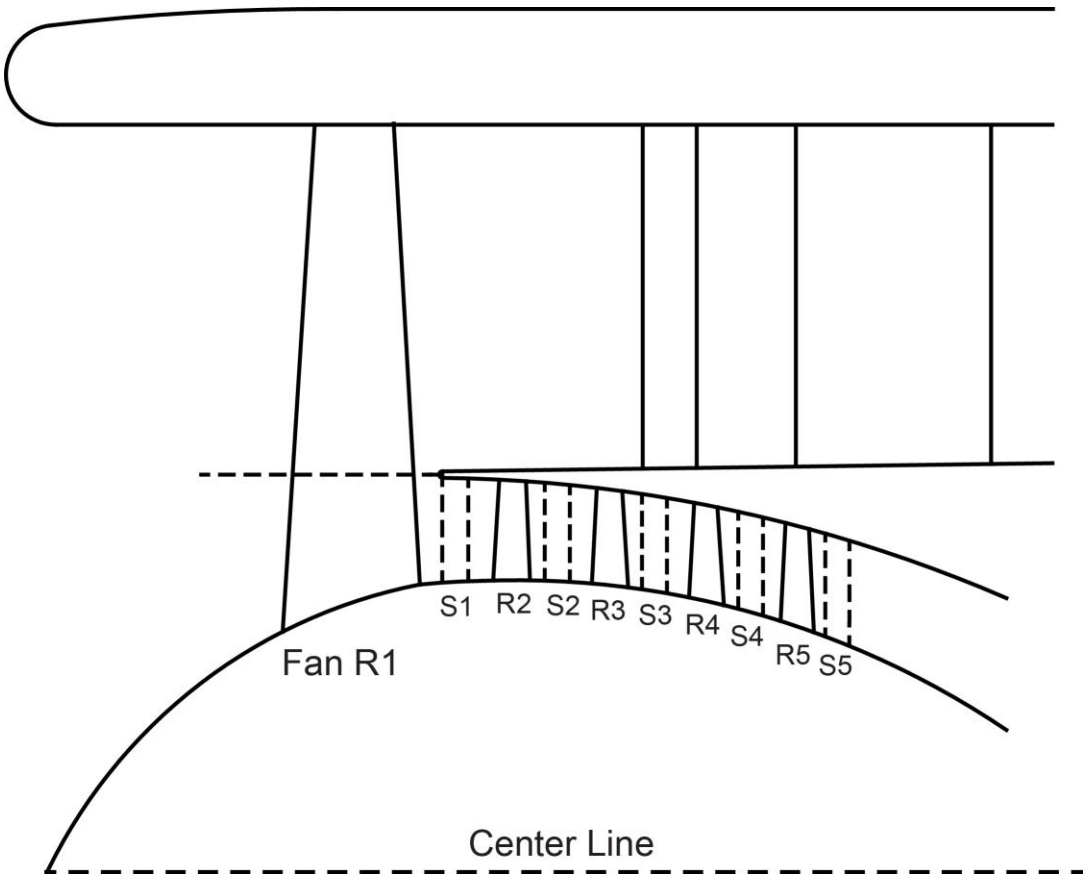

Test Conditions for Flight Profile

- **17 test cases were ran to simulate a typical flight**

Case	Mach No	Alt(ft)	Thrust(%)	Pt(psi)	Tt(R)
1	0.780	35000	100	5.18	466.4
2	0.780	35000	75.6	5.18	466.4
3	0.780	35000	72.9	5.18	466.4
4	0.780	35000	69.9	5.18	466.4
5	0.780	39000	100	4.28	462.0
6	0.780	39000	84	4.28	462.0
7	0.780	39000	79.8	4.28	462.0
8	0.780	39000	76.8	4.28	462.0
9	0.780	39000	10	4.28	462.0
10	0.730	38334	10	4.22	455.8
11	0.714	37357	10	4.36	453.9
12	0.669	34281	10	4.84	455.8
13	0.608	30029	10	5.60	465.6
14	0.552	25666	10	6.50	476.5
15	0.490	20047	10	7.90	491.7
16	0.446	15435	10	9.31	505.0
17	0.406	10735	10	11.01	518.9

Typical Ice Collection Efficiency on Splitter

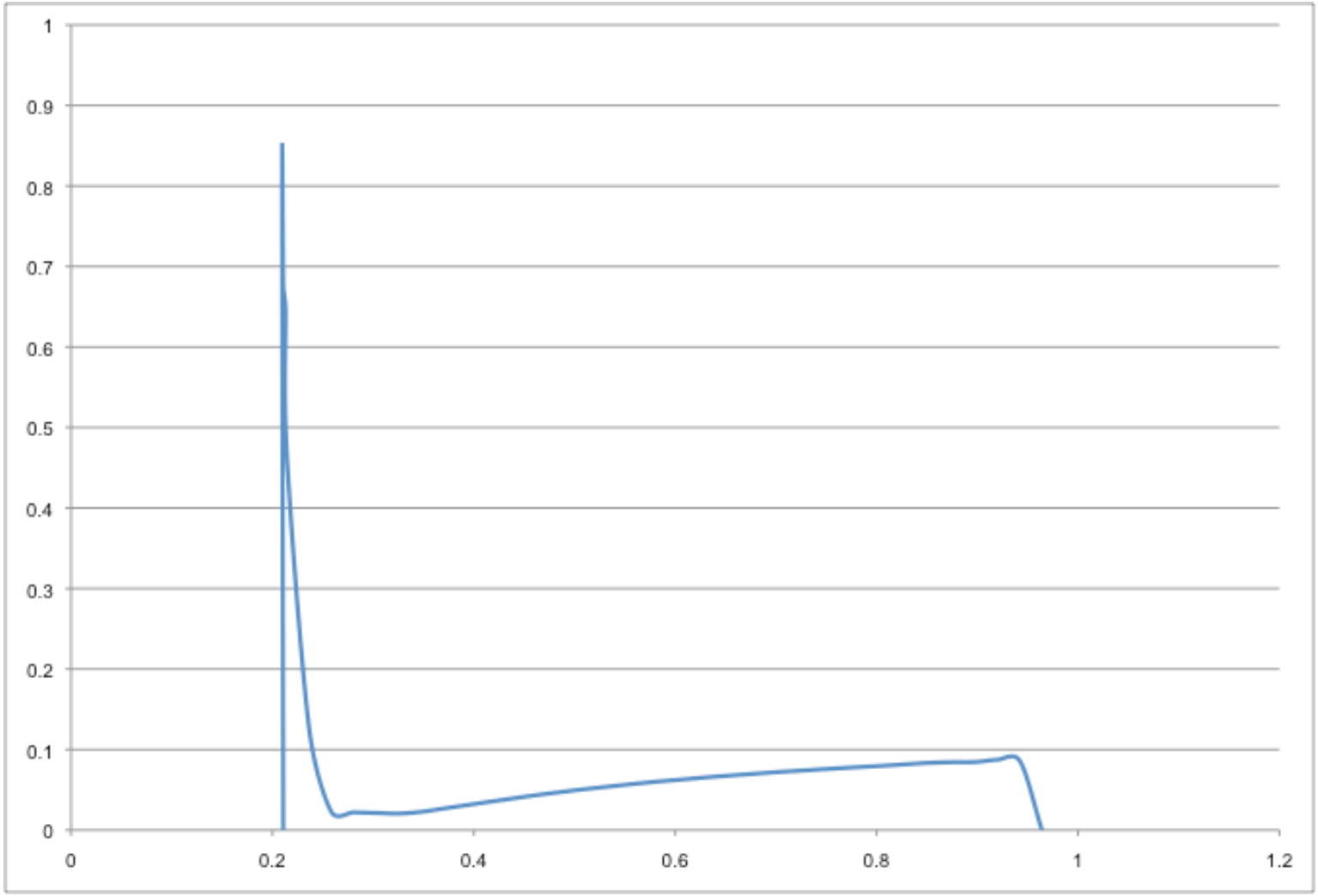

Ice Shape Assuming No Erosion

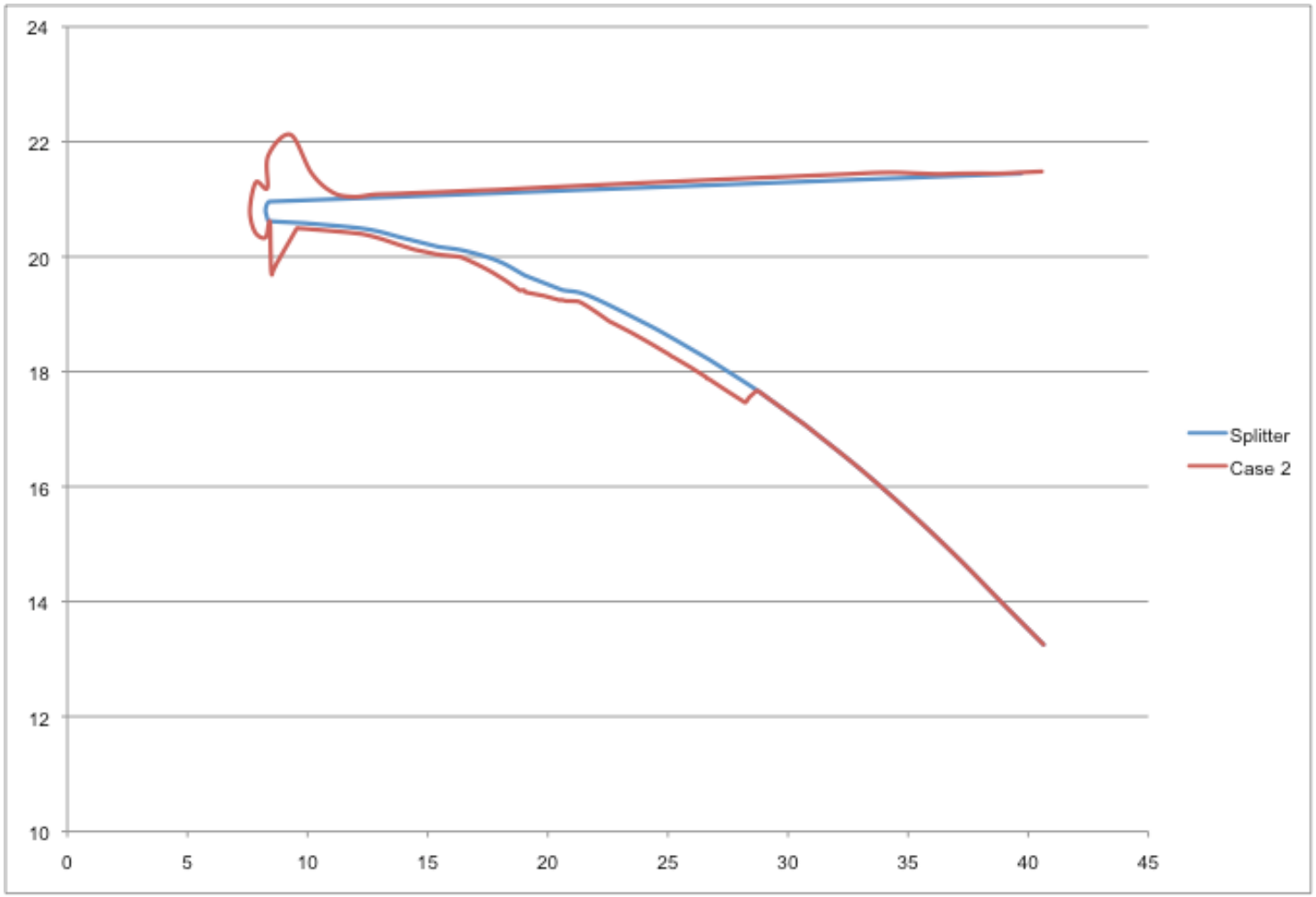

Stator Ice Shape Assuming No Erosion

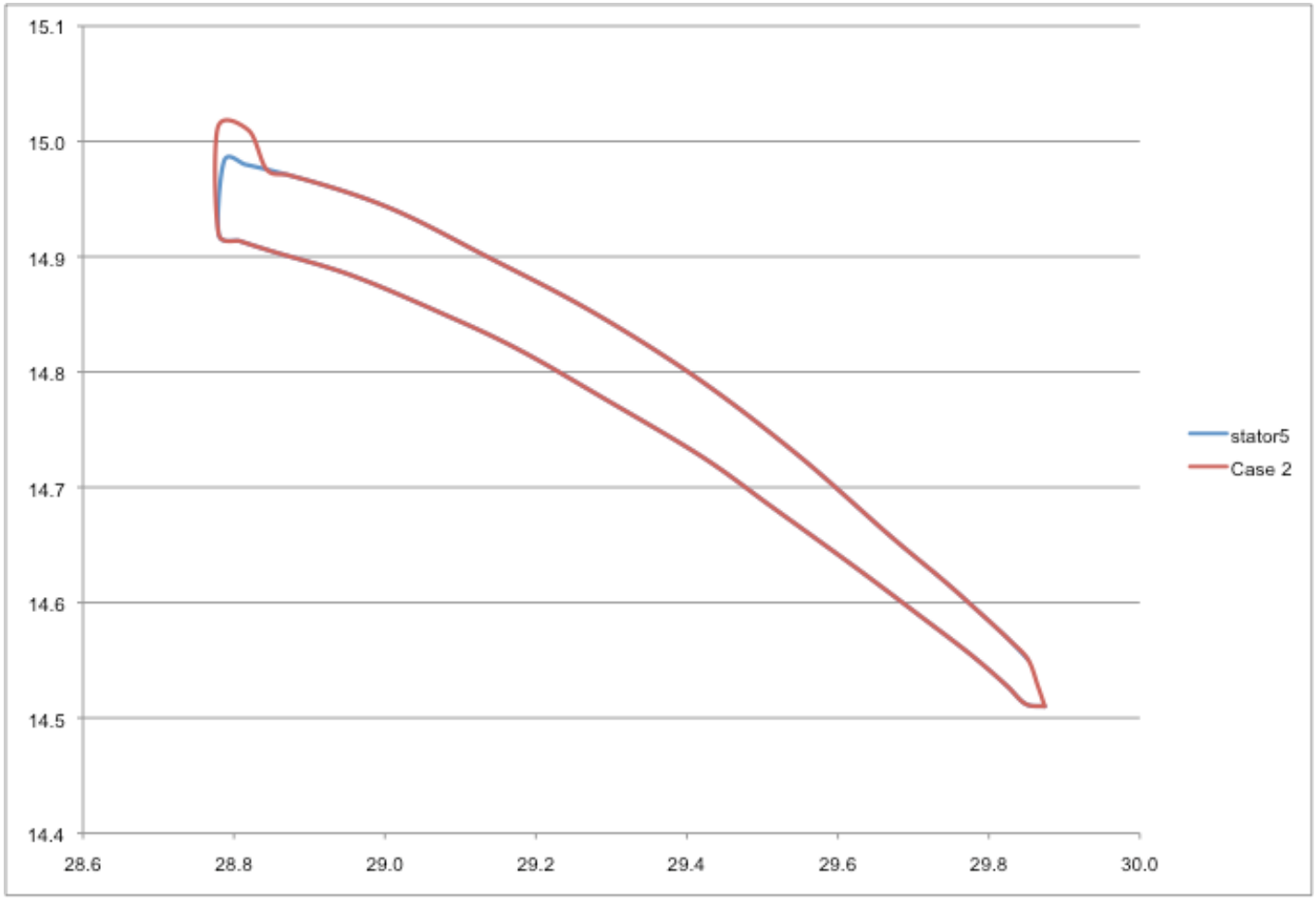

Future Work

- **Experimental data needed on:**
  - **Deposition rate of ice particles when water film is present**
  - **Coefficient of Restitution / ice fracture**
  - **Ice erosion (especially with a water film)**
  - **Mixed phase icing**
  - **Engine icing**
- **Allow impingement on grid boundary (lower wall)**
- **Incorporate higher fidelity NPSS results**
- **Incorporate model into LEWICE3D**

Conclusions

- **Multiphase physics were added to GlennICE including:**
  - **Temperature and phase change of particle before impact**
  - **Drag and heat transfer correlations for cylinders and disks**
  - **Particle bouncing (coefficient of restitution)**
  - **Ice erosion**
  - **Additional terms to mass and energy balance**
- **Test case on E^3 geometry showed ice build up is possible**
- **Verification of models needed before release is possible**