AirSTAR Hardware and Software Design for Beyond Visual Range Flight Research

Sean Laughter
Aeronautics Systems Engineering Branch
NASA Langley Research Center
Hampton, VA 23681

David Cox
Dynamic Systems & Control Branch
NASA Langley Research Center
Hampton, VA 23681

***Abstract*—The National Aeronautics and Space Administration (NASA) Airborne Subscale Transport Aircraft Research (AirSTAR) Unmanned Aerial System (UAS) is a facility developed to study the flight dynamics of vehicles in emergency conditions, in support of aviation safety research. The system was upgraded to have its operational range significantly expanded, going beyond the line of sight of a ground-based pilot. A redesign of the airborne flight hardware was undertaken, as well as significant changes to the software base, in order to provide appropriate autonomous behavior in response to a number of potential failures and hazards. Ground hardware and system monitors were also upgraded to include redundant communication links, including ADS-B based position displays and an independent flight termination system. The design included both custom and commercially available avionics, combined to allow flexibility in flight experiment design while still benefiting from tested configurations in reversionary flight modes. A similar hierarchy was employed in the software architecture, to allow research codes to be tested, with a fallback to more thoroughly validated flight controls. As a remotely piloted facility, ground systems were also developed to ensure the flight modes and system state were communicated to ground operations personnel in real-time. Presented in this paper is a general overview of the concept of operations for beyond visual range flight, and a detailed review of the airborne hardware and software design. This discussion is held in the context of the safety and procedural requirements that drove many of the design decisions for the AirSTAR UAS Beyond Visual Range capability.**

I. Introduction

In this paper we discuss the hardware design and implementation of the airborne avionics system of a new Beyond Visual Range (BVR) capability for the NASA Airborne Subscale Transport Aircraft Research (AirSTAR) project. This was the first unmanned aerial system (UAS) designed at NASA Langley Research Center to utilize single-pilot operation beyond the visual range of a safety observer or pilot. The focus of the text is on the airborne avionics design and the drivers for decisions that drove that design, including future research needs, flight efficiency, and flight range safety concerns and geography. Brief asides into the history of the project, evolving concepts of operations, and the changes made to them are taken to place the work into the context of the overall design space and operational restrictions levied on the work. A discussion of the ground hardware and associated systems are not included here, but detailed descriptions of this part of the project work as well as an extensive discussion of the final concept of operations can be found in other publications [1].

II. AirSTAR History and Development

The NASA AirSTAR project began as an element of the NASA Aviation Safety Program's Vehicle Safety Technologies Project. At its core, AirSTAR was meant to provide UAS platforms for the testing of experimental flight control laws and vehicle dynamics research on aircraft configurations currently and actively in use for civil transport applications [2]. Representative sub-scale models of existing aircraft were used to test new flight control laws and flight dynamic characterizations in areas of the flight envelope too risky for full-scale aircraft. Initial work built the project capability up to flying General Transport Models with a traditional tail configuration.

The AirSTAR UAS was built through a phased approach by adding complexity and functionality at every phase-upgrade of the system. This approach was taken since at the time of the project's conception, AirSTAR was one of the first large UAS projects undertaken at NASA Langley Research Center. In addition to the technical challenges to be solved, procedural, managerial, and safety issues were also addressed during this build-up, both at the project and Center levels of management. Table 1 illustrates the key functional elements of the system and how they changed through the phased build-up to BVR Phase-V.

As illustrated by Table 1, capabilities were added up until Phase-IV [3], at which point an exhaustive flight schedule was undertaken to utilize the system for more than fifty research flights.

TABLE I. AirSTAR Phased Build-Up

Element	P-I	P-II	P-III	P-IV	P-V
External Pilot	X	X	X	X	
Dynamically Scaled Vehicle				X	
Data System		X	X	X	X
Mobile Operations Station			X	X	X
Internal Pilot				X	X
Beyond Visual Range Ops					X

The Phase-IV system served this research well, but it had certain fundamental limitations to increasing research efficiency due to its concept of operations. When moving to Phase-V, the decision was made to conduct initial system testing using a surrogate aircraft rather than the expensive and more difficult to fly dynamically scaled, turbine powered vehicles used for the research in Phase-IV. Hence, the dynamically scaled aspect of the project was dropped for Beyond Visual Range operational development.

III. AirSTAR Concept of Operations

The AirSTAR Phase-IV Concept of Operations is illustrated in Figure 1. The system utilized two pilots throughout a research flight. An external safety pilot was utilized on the flight line for take-off and landing operations. This pilot used a traditional RC transmitter to operate the aircraft from a third-person perspective. After take-off the external pilot would hand-off the aircraft to the Research Pilot located in the cockpit of the Mobile Operations Station (MOS) who would then operate the aircraft for the duration of the research from his first-person cockpit perspective. The external safety pilot also acted as pilot-in-command and was able to override control at any time during a flight in the event of the Research Pilot losing control or situational awareness of the aircraft itself. In normal operation, the external pilot would re-establish control of the aircraft after research was complete and land the aircraft on the runway.

The external safety pilot being designated as pilot-in-command gave him final piloting authority of the aircraft and was central to the safety and range containment strategy of the Phase-IV system design. This created some fundamental limitations on the system's capability, not the least of which was the restriction on the operable airspace range resulting from this strategy. The aircraft had to remain within visual range of the external pilot at all times, and this requirement restricted flight range to about a half nautical mile distance at an altitude of 1,200 ft. This flight range size forced the aircraft into fairly tight racetrack or figure-eight flight patterns, and therefore a large amount of both time and personnel attention during a flight was spent monitoring range boundaries and making turns to remain within hazard boundaries. Since the majority of research tests could only be conducted during the twenty second straight legs of the flight patterns, research selected for test was restricted to that which could fit in those windows, and even then test points would often be repeated if they weren't completed prior to a turn having to be executed. Obviously, this affected both research selection and the research efficiency of the system.

AirSTAR Phase-V BVR was developed to lift these limitations and provide greater research efficiency through the expansion of the airspace range. The targeted expanded airspace is approximately 10 nautical miles from the MOS with a maximum altitude of 15,000 ft. Figure 2 illustrates the concept of operations for AirSTAR Phase-V. The basic difference from Phase-IV is the removal of the external pilot leaving the ground station research pilot as the only pilot necessary to operate the aircraft through all three phases of flight. Flight prep is conducted by personnel outside on the taxiway, and pre-flight checks are conducted over audio and video communication channels utilizing voice and hand prompts. The pilot communicates with the air traffic control tower as if he were operating a full-scale manned aircraft, taxis to the runway, and takes off utilizing both synthetic video views and tail-camera video feedback. Once in the air, all airspace control is conducted through the air traffic control tower in the same manner as a manned aircraft with the notable exception that a Range Safety Officer (RSO) is monitoring aircraft position in the event he or she must make the call for flight termination. This new paradigm simplifies the piloting scheme of the aircraft, but new safety systems were required to meet the safety and range containment requirements that were left open by the removal of the external pilot.

IV. Wallops Flight Facility Airspace

NASA Goddard Space Flight Center's Wallops Flight Facility (WFF) was chosen as the flight range for the initial operation of the BVR system. Since neither NASA Langley nor Wallops had operated such a system locally, a great deal of

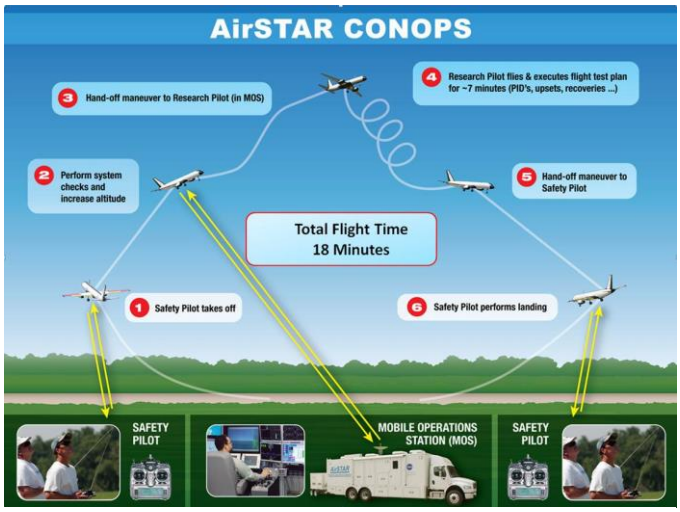

Figure 1: AirSTAR Phase-IV Concept of Operations

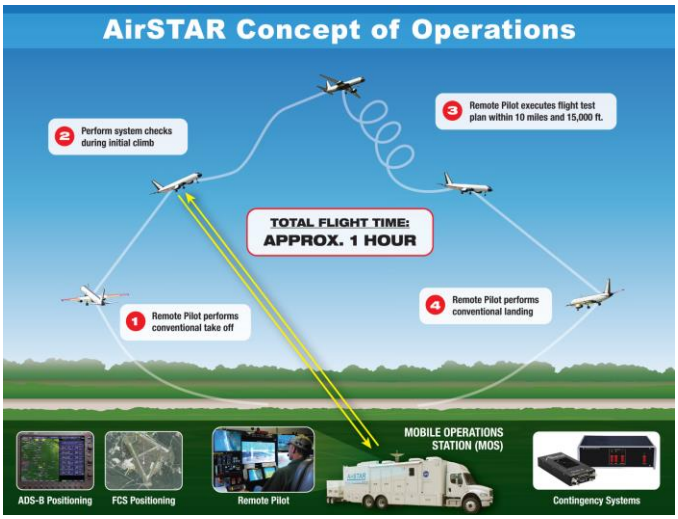

Figure 2: AirSTAR Phase-V Beyond Visual Range Concept of Operations

design collaboration was conducted between the project team at Langley and the team at Wallops. The decision was made to operate from the main runway complex rather than the smaller unmanned aerial vehicle runway that was available. The main driver for this was the extended length and width of the full size runway to make landing the aircraft from the internal cockpit as simple as possible. The potential for using the system on larger and faster aircraft with longer landing and take-off distance requirements was also considered in this decision.

Figure 3 illustrates the final airspace configuration utilized at WFF. The red line denotes the hazard boundary within which the aircraft must always remain. Waypoints are marked to establish standard flight paths for the aircraft during operation, and a marker for a lost-link loiter point (LLP) is also visible and is utilized in the case of control link failure. The hazard area is not uniform, nor does it encompass all of the available restricted airspace, and there is one no fly zone within the area itself. While the entire hazard area is within restricted airspace, WFF and other agencies have a great deal of infrastructure present on the ground within the restricted airspace area, and in addition there are beaches and other potentially inhabited areas scattered along the edges of the restricted airspace. As a result, a more restricted flight envelope and no-fly zones were established to WFF's specifications.

Not visible in this wider view is the fact that the main runway complex is actually not within the restricted airspace. Therefore, upon take-off the aircraft is in the National Airspace and Certificates of Authorization from the FAA were required in order to operate properly. The transition from the runway area into the larger restricted airspace requires flying over Chincoteague Road, which is the main corridor onto and off of Chincoteague Island, VA. As a result, the first flight of the system required this road to be closed for the duration of the flight, though this was not required for subsequent flight operations.

These restrictions greatly drove the design of the system both in terms of redundancy and the subsystems on board the aircraft, as WFF was concerned with having constant valid positional data from the aircraft under different failure modes and having multiple ways to ground the aircraft in the event of an imminent breach of the hazard boundaries.

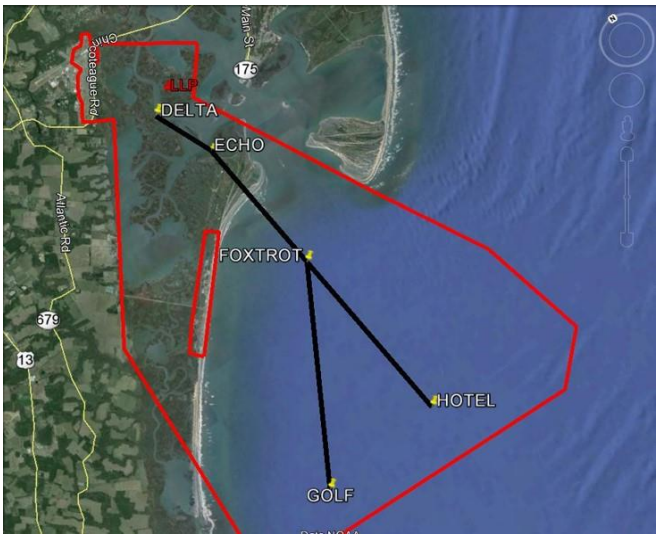

Figure 3: Wallops Flight Facility Operational Hazard Boundaries

V. High-Level System Description

Some discussion of the top-level system design, encompassing both the aircraft and the ground station is necessary to understand how the two interact. The pilot and all flight personnel work inside the Mobile Operation Stations (MOS), which is the main ground station for controlling the AirSTAR vehicle. In the MOS there are stations for researchers, hardware and software support personnel, flight directors, a cockpit for the pilot, etc. All displays and computations done in the MOS are driven by downlink data from the aircraft. In total there are four data links communicating between the aircraft and the MOS. These are the Automatic dependent surveillance – broadcast (ADS-B) data, the Contingency System-B (aka flight termination) controls, the analog video, and the Command and Control (C&C) telemetry link transmissions. Each of these links has their own transmitter and antenna (or antennas) and are therefore separate in order to promote redundancy and keep multiple systems from becoming inoperable via a single failure mode.

The ADS-B and Contingency System B are fundamental to the flight contingency system so we reserve discussion of them for a separate section. The analog video subsystem simply transmits analog video from a tail camera for display within the MOS and can act as a backup to the synthetic display in the event of a main data downlink telemetry failure. In that case it can also serve as a limited means of establishing aircraft position based on visual cues. The video system is separate from the airborne flight computer and since its main function is mainly for use during take-off and landing operations, it was designed for its best performance when close to the MOS.

The main Command and Control (C&C) telemetry link carries the data required between the aircraft and the MOS for the system to function and is bi-directional. Uplink data includes commands for switching between control laws under test and input from the cockpit flight inputs. Downlink data includes all sensor data, state data of the aircraft, control and system monitoring data. Due to the importance of the C&C telemetry link is is implemented in hardware via a redundant system.

Prior to AirSTAR Phase-V BVR operation, the AirSTAR system was designed such that the computationally heavy calculations were done on the ground, including all flight control law execution and other experimental code. The aircraft mainly just returned sensor data and fed surface actuators the commands sent from the ground computers. However, this architecture (where the controls and modeling are not local to the sensor data collection) imposed restrictions on the full round-trip (ground-to-air-to-ground) latency time of the system. Furthermore, in order to have a safe system that could

not only remain within hazard boundaries but also present the best possible chance to recover from faults, having all of the main computation occurring on the ground was not ideal. To alleviate some of these constraints the controls and modeling algorithms were moved into the airborne flight computer, requiring it to now have the power to execute this code in real-time. Remaining on the ground systems were generation of ground displays, caution and warning alerts, and required pilot and test interfaces. As a result, the entirety of the airborne avionics required a redesign to meet these new computational requirements.

Figure 4 illustrates the general structure of the top-level airborne avionics. The illustrated sensors are not a comprehensive list of all available on the aircraft, but are instead representative of the bulk of those in the system since many are standard analog or serial sensors that are commercially available. The four major hardware systems to be discussed in relation to this new design are the Flight Computer Unit (FCU), the Power Distribution Unit (PDU), the Autopilot, and the Flight Termination Receiver. All four play separate roles in parts of the system, and they all interact to provide the Flight Contingency System functionality required to meet range safety requirements.

As illustrated there are two channels of communication between the FCU and the PDU. One is a uni-directional multi-channel bundle of pulse-width modulation (PWM) signals for servo commands coming from the FCU to the PDU for delivery to system actuators. The selection of the source of these commands is determined by the state of the Flight Contingency System to be discussed later. The other channel between the FCU and PDU is used for various status monitoring functions via an RS422 connection and some

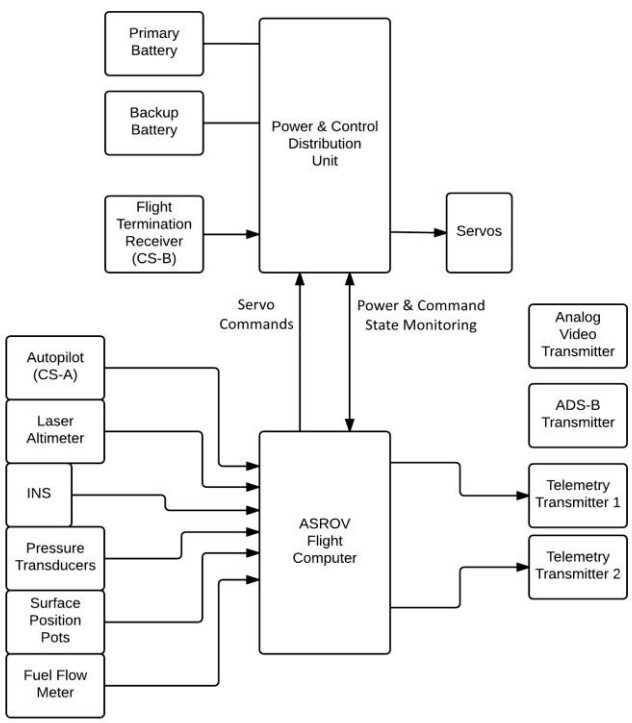

Figure 4: AirSTAR Beyond Visual Range Airborne Avionics System

general-purpose input/output channels. These monitors include the state of the flight termination receiver and the voltage and current monitors for the batteries and other subsystems. This status information is all placed in the main C&C downlink for transmission to the ground for real-time monitoring and display to researchers and flight test engineers.

VI. Avionics Hardware Subsystems

We will now discuss a number of the major subsystem components of the airborne avionics system. These are the main flight computer, the power distribution unit, the Command and Control Link hardware, and the Flight Contingency Systems for range containment.

A. ASROV Flight Computer

The Avionics System for Remotely Operated Vehicles Flight Computer (ASROV FCU) was procured under a Small Business Innovation Research (SBIR) agreement with Coherent Technology Services, Inc. (CTSI, Inc.) [4]. It is the central computing component in the AirSTAR BVR UAS and runs all controls and modeling code on the aircraft.

The system is a heterogeneous, dual-processor computing platform composed of one single-core x86 processor paired with a PowerPC processor within a programmable logic fabric that supports the majority of the required peripheral interfaces. The form factor of the system is a mixture of PC/104 and PC/104-plus boards in an integrated stack. The two-processor implementation is integral to how the software is split in order to promote safety and resilience of the flight system. The x86 processor is termed the Research Flight Control Systems (ResFCS) and executes all of the controls and modeling code under test. Any code that is unproven or subject to in-flight failure during the test is run on this processor. The PowerPC processor is termed the Primary Flight Control System (PriFCS) and runs the stable flight control laws. These stable laws are reversionary controls used to fly the aircraft when the code-under-test proves unstable or otherwise compromised during aircraft operation. The pilot retains full control of reverting to this fallback from his control panel in the cockpit of the MOS.

The programmable logic fabric surrounding the PowerPC processor implements peripheral interfaces such as servo command signal switching between ASROV-generated signals and external autopilot signals, serial interfaces, general purpose IO, and digital filtering of analog channels. The analog interface of ASROV supports 32 differential analog inputs. The most innovative aspect of the analog design is the programmable analog digital filter. Parameters for these filters can be set on a per-channel basis to tune for specific characteristics of the attached sensor. In the AirSTAR system, the primary analog sensors are the outside air temperature sensor, pressure transducers, angle of attack and sideslip vane potentiometers, and the outputs of an analog inertial measurement unit used as a supplement to the main inertial navigation system unit in the aircraft.

Serial interfaces supported are standard RS232 and RS422. A Data Format Description Language-based (DFDL) parsing system makes use of Extensible Markup Language (XML) files for message parsing configuration.

B. Power Distribution Unit

Figure 5 illustrates the AirSTAR Power Distribution Unit (PDU). The first of its two main subsystems is responsible for all power switching, regulation, and monitoring. The second controls final aircraft actuator command distribution. The decision to place both of these functions in the same enclosed unit was based primarily on packaging and wiring restrictions inside the aircraft. Since the power front-end is stand alone in its operation we will discuss it here, and discuss the command distribution system later as it relates to the Flight Contingency System.

The power front-end supports a shore-power source for flight line operation, and primary and backup batteries for flight operation. Automatic switching from shore power to primary battery to backup battery is supported as each input voltage source falls outside of its operational threshold. Rather than use the backup battery to extend total flight time, it was utilized as a contingency fallback in the event of a failed primary battery or if unplanned extended flight caused the aircraft to use all of the primary battery. Therefore, standard operating procedures dictate flight operation on the primary battery only and any situation that switches to the backup battery is a cause for an immediate return-to-base and landing of the aircraft. The battery in use is included in the aircraft's default downlink telemetry for display on the vehicle health monitor.

Standard voltage and current monitoring functions are also supported for all main power inputs and a majority of regulated supply rails. This data is communicated back to the ASROV FCU via an RS422 serial connection and included in the standard downlink telemetry. In addition to allowing real-time monitoring of power status during flight, review of the power data post-flight has been useful in correlating events with command data to verify potentially incorrect behavior in control laws under test.

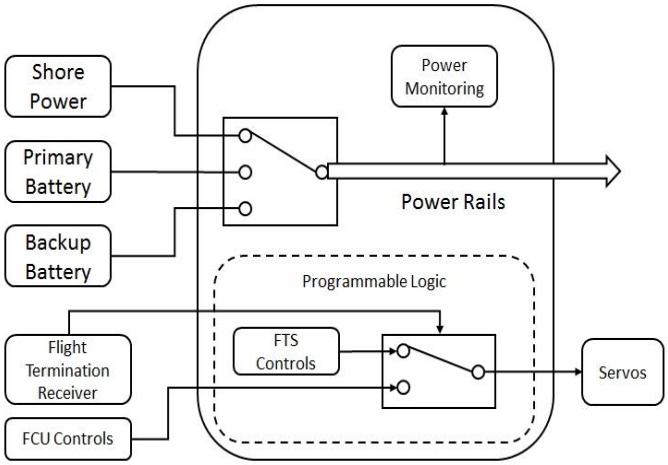

Figure 5: AirSTAR Phase-V Beyond Visual Range PDU

C. Command and Control Link

The main Command and Control Telemetry Link on the aircraft is provided by a pair of commercial off the shelf dual-band transceivers. These are ethernet-based transceivers that provide ethernet gateway capability over the RF link. This allows the transceivers on the aircraft to be addressed through normal ethernet-based protocols and become part of the MOS ethernet network and are addressed as such. User Datagram Protocol (UDP) communication is used since transmission time is critical and the dual transceiver solution lowered the required connection reliability of one single transceiver.

The primary reason for utilizing two of these transceivers is for redundancy. The ASROV FCU utilizes the newest received UDP packet from either system regardless of which transceiver receives it. This allows uninterrupted data transmission when the antenna of one system may be obstructed due to the attitude of the aircraft relative to the ground antenna.

D. Flight Contingency System

Devising a resilient flight contingency system was of the utmost importance to the project in order to buy down risk and allow access to the airspace required for operation. A two-level system was devised, consisting of an automatically injected failsafe, termed Contingency System-A, paired with a manually controlled secondary system, Contingency System-B. Making proper use of this system requires awareness of aircraft position, and therefore there are a total of three available position fixes for the aircraft. The primary position is provided by the main inertial navigation system on the aircraft and is transmitted in the main data on the C&C downlink. Secondary position backup is provided by the commercial autopilot's own GPS solution and is also transmitted in the C&C downlink data. Finally, in the event of either a double failure of the two previous systems or a loss of downlink communication with the aircraft, the on-board ADS-B position solution is available via a commercial receiver and display. The ADS-B system has its own transmission link and is not reliant on the main telemetry downlink. Any standard ADS-B receiver can see the aircraft and identify it by its FAA-assigned N-Number. All of these position solutions are there to allow the RSO and other ground personnel to make informed decisions about when or when not to terminate the flight. The actual mechanics of controlling the aircraft in these situations is reliant on a PWM path through the flight control system.

Figure 6 illustrates how control signals pass through the system and where they are switched at two points in the command chain. Both PWM command switches are implemented in programmable logic and controlled by outside signals (PWM or general purpose IO) and therefore do not require either the x86 or PowerPC processors to be operational to switch between command signal sources.

E. Contingency System – A, Autopilot

Contingency System-A refers to the commercial-off-the-shelf autopilot that is interfaced with the ASROV FCU in order to form the upstream automatic contingency system. The autopilot is programmed so that in the event it takes over command of the aircraft it proceeds to a predetermined GPS lost-link waypoint and loiters there until either command is re-established from the ground or fuel is exhausted. Orbiting the lost-link point is meant to allow for a standard diagnostic procedure to be executed in an attempt to identify and resolve the issue if it is something that can be remedied on the ground. In case of fuel exhaustion, the autopilot continues circling the lost-link waypoint as it descends, ultimately impacting the ground within that controlled loiter area.

The ASROV FCU programmable logic, controlled by a PWM from the autopilot itself, switches between either the computer's internally generated servo commands (for example, commands generated by a control law under test) or the autopilot commands. The commercial autopilot is actually being used in a non-standard mode in this system. Usually, a dedicated autopilot ground station would be tethered to an RC pilot controller and communicate with the autopilot over an RF link. However, in the AirSTAR BVR system the telemetry link is emulated over an available RS232 port so that the flight computer can set the mode of the autopilot to control its behavior. There are two main failure modes addressed by Contingency System-A.

- *Loss of Command and Control Data Telemetry Link*

In the event of a loss of data telemetry uplink, which results in commands from the ground being disrupted and the research pilot losing command, the ASROV FCU senses this disruption and instructs the autopilot to execute the relevant flight profile which switches the internal PWM switch to the autopilot inputs. The executed flight profile is dependent on the current state of flight. During up-and-away flight, where the aircraft has lifted off and rotated for a heading into the restricted airspace, the autopilot flies the aircraft to the lost-link waypoint. During take-off prior to rotation, the autopilot continues straight ahead, lowers altitude and cuts thrust in order to land the aircraft. Since the ASROV FCU is still in control of the contingency engagement it is able to more finely tailor the response to the phase of flight. An engagement of Contingency System-A via link failure results in the lost-link waypoint orbit being counter-clockwise.

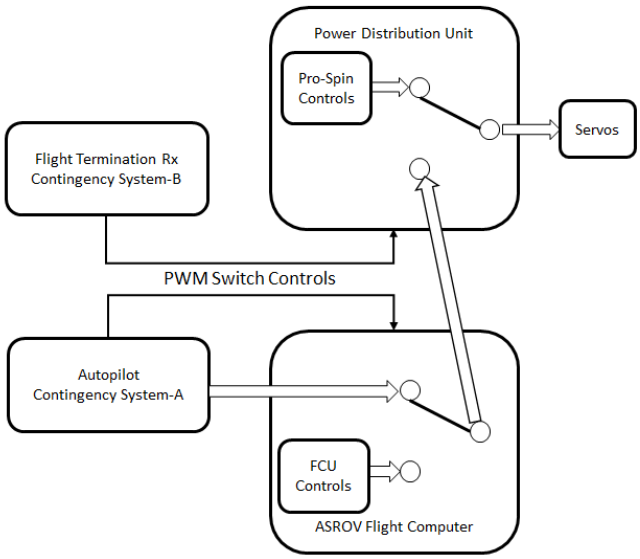

Figure 6: Servo Command Path through the Flight Contingency System

- *ASROV FCU and Autopilot Communication Failure*

In the event the communication channel between the ASROV FCU and the Autopilot becomes disrupted, either through a hardware fault or a software fault, the Autopilot will detect this condition and automatically execute the flight profile for proceeding to the lost-link waypoint. Again, since the PWM switch in the ASROV FCU is implemented in programmable logic, the Autopilot can switch itself into the command path and command for flight to the loiter point even without active serial communication with the ASROV FCU. This type of failure results in the lost-link waypoint orbit being clockwise. The change in orbit direction allows an immediate identification of where to start looking for potential failures of the system. This design does present the risk of an autopilot failure causing inadvertent autopilot control of the aircraft since it controls its own takeover of aircraft command, but this was considered a nominal and acceptable risk given the amount of safety margin implementing this system allowed. Furthermore, such a fault can be disrupted by use of Contingency System-B.

F. Contingency System – B, Flight Termination

Contingency System-B refers to the commercial-off-the-shelf Flight Termination System used to implement the last ditch contingency system on the aircraft. It consists of the receiver on the aircraft, the transmitter on the ground, and the PWM command switch in the aircraft PDU. Like all standard flight termination systems it uses transmitted "tones" to control the receiver and set it in Monitor, Armed, and Terminate states, as the relevant switches are thrown on the transmitter. The use of the term Contingency System-B for this system is mainly a semantic concern, so as not to give the impression that it utilizes ordinance and explosives to destroy the aircraft. Instead, activation of this system initiates pro-spin control positions, resulting in a tight spin to the ground. Furthermore, Wallops Flight Facility is a major location for rocket launches, which use fully certified FTS systems. As the AirSTAR implementation of this hardware does not meet those standards and is not required to do so, the terminology was changed to minimize confusion.

Like the PWM command switch in the ASROV FCU, the PDU switch is implemented in programmable logic using a synthesized VHDL description. The pro-spin control positions are hard-coded into the device and require a firmware edit and update to change. This aids in configuration management of the position definitions across this and any future aircraft to

use the system, though it does add time when a servo or servo linkage change is required. Again, the configuration management benefits of this design outweighed the inconvenience of these firmware updates.

The PWM command switch itself is controlled by the tone monitor outputs from the commercial FTS receiver. The tone command outputs were used rather than the command channel outputs because they were closer in level to the input voltage tolerance of the programmable logic device. In addition, utilizing the tone monitors directly can allow the use of a non-standard switch sequences to trigger the system if it were ever deemed necessary.

In normal operation, Contingency System-A will trigger on most software faults and allow for limited during-flight diagnosis of telemetry or control issues. Contingency System-B would be utilized if a double failure occurs where command from the ground is lost and Contingency System-A fails to take control of the aircraft.

VII. ASROV Flight Computer Software

The software architecture was designed to be as flexible as possible in accommodating changes both to the sensor components that drove the flight control algorithms, as well as to the research code that defined the flight experiment. To allow rapid software development and desktop testing most of the code was implemented in Matlab/Simulink, and autocoded into C-language modules for use on the real-time processor. Simulink provides an excellent environment for algorithm debugging and the construction of test-cases that verify proper operation under a variety of emulated input conditions. This nearly eliminated the need for run-time inspection of variables on the hardware as the software was developed. To allow flexibility in choice of sensors, the sensor processing code was written generically, with most of the sensor configuration done in an XML file read by the executable at startup. This allowed, for example, multiple vendors inertial navigation units to be supported and changed out without requiring modification to the Simulink-based autocode, or a recompile of the flight software.

Each of the sensor subsystems was managed by an independent thread on the primary processor, PriFCS, using a custom Linux kernel module for the analog inputs and serial ports instantiated in the programmable logic. A single generic parser was created which accepted specifications written in DFDL, a standard for describing stream messages in XML. On startup the main executive on PriFCS looked for DFDL files associated with each serial port, and if found used this information to configure a serial stream parser and launch a thread to manage that port. These DFDL-defined threads would provide the parsed data message in a specified format which was memory mapped into the main loop. The specification included casting to an output data type and applying scale and bias conversion. This allowed the main routine, and Simulink-based algorithms, to receive sensor inputs in engineering units. The DFDL specification also provided for the identification of a checksum algorithm and its application to ensure data integrity. A set of common checksums was built into the software libraries, and custom routines could be added. Even with complex sensors, such as the inertial navigation system that provides, accelerations, rates, position and orientation information, equipment from different vendors could be wired into the system and provide the same standardized data to the main real-time loop, with the only change being an XML configuration file.

PriFCS was responsible for timing of the main control loop, and its operation was critical to the ability of the pilot to control the vehicle. Most of the computational work was done in a routine that was autocoded from Simulink. For PriFCS this algorithm was relatively simple. It performed stick-to-surface mixing, mapping the pilot commands into aero control surface displacements. It also responded to trim inputs, to define a stick neutral bias point for each surface. These trim setting were passed into the research control laws to smooth the transition when a new control was invoked. PriFCS would pass data to the ResFCS over the Peripheral Component Interconnect (PCI) bus and wait for the return commands. If the flight mode required communication with ResFCS, and it failed to respond within a timeout period, commands would hold last value until a pilot input reverted the operation back to PriFCS control. This provided a degree of fault tolerance in the software being executed on the research processor, which were updated more frequently and received less testing than the PriFCS code.

The research processor, ResFCS contained several parallel algorithms that could be independently engaged for flight evaluation. These included not only different flight control laws, but also a variety of triggered test inputs to drive aircraft control surfaces for system identification. The operation of code on ResFCS was controlled by mode selection knobs and engage switches as part of the pilot input and were all implemented as hardware switches in the pilot cockpit. Because the system could be operated in several combinations of modes it was important to be able to test these in a real-time simulation environment.

For this testing, the ASROV hardware was not used, but rather it's hardware functions were emulated in Simulink, and tied to the existing Simulink models for PriFCS and ResFCS algorithms. This allowed for piloted simulations that included a model of the vehicle dynamics and a visual rendering of the flight trajectory. In these piloted simulations it was possible to exercise all the complexity in the underlying flight software, and if any switches caused signal jumps, filter resets or other unanticipated transients it was possible both to see those and to determine if the effects on the flight trajectory were acceptable. It was also possible to fail sensor components in the emulation, and follow the effects on both the automated system and the pilot's response. Through a series of these piloted simulations many of the failures that were identified as potential hazards were realistically emulated and provided evidence that our planned mitigations would be sufficient to ensure safety of flight. The previously discussed Contingency System-A and Contingency System-B are used to cover cases where the reversion to PriFCS control is not adequate or possible.

VIII. Integration and Flight Test Results

The airborne system was integrated into and tested in a "Bat-4 UAV," pictured in Figure 7, which was procured from then MLB UAV, now known as Martin UAV. It is a push-prop aircraft with fixed landing gear, and control surfaces consisting of two ailerons, two flaps, and two ruddervators on an inverted V-tail. It was primarily chosen as the test platform due to its abundance of internal volume for avionics integration and its simple flying characteristics, making it ideal for testing the system without the taxing workload of taking off and landing an already challenging aircraft with new avionics systems.

The system was tested over the course of three flights at Wallops Flight Facility. The initial flight was a qualification flight and was shortened to limit the amount of time Chincoteague Road was closed to traffic. The second flight suffered a non-fixed GPS solution and the decision to return-to-base was made and the aircraft landed without incident and the issue addressed. This flight, though suffering a hardware malfunction, successfully demonstrated the use of the caution and warning system to alert the research personnel to the fault so they could react accordingly. The final flight was a one hour flight that successfully demonstrated the airspace expansion the system was aiming to accomplish. The aircraft traveled 6 nautical miles from the MOS at an altitude of 4,000 feet, limited by battery size and aircraft performance. Maneuvers were performed to test the stability of the telemetry links on the aircraft, including both the main C&C telemetry link and the Contingency System-B link health. In addition to fundamental system checks, this flight also was used for airspeed envelope expansion, stall speed identification, air data calibration, and system identification technology research [5] [6].

Acknowledgment

The authors would like to thank Dr. Christine Belcastro for her years of project advocacy; Kevin Cunningham, John Foster, and Stephen Riddick for bringing years of flight test experience to bear on the project; the software team of Leigh Garbs, Regina Tober, and Josh Carbonneau; Dan Murri for his piloting skills; Kevin Barnes and Fernandus Rattliff for MOS hardware support; Greg Howland, Scott Sealey, and David Hare for mechanical and avionics support; Mike Scherner for antenna and RF support; and the many personnel at NASA Goddard Wallops Flight Facility for the use of their airspace, facilities, and expertise in support of the project operations.

Figure 7: Integrated AirSTAR Beyond Visual Range BAT-4

References

[1] Cunningham, K, Cox, D.E., Foster, J.V., Riddick, S.E., Laughter, S.A.. "AirSTAR Beyond Visual Range System Description and Preliminary Test Results", AIAA Guidance, Navigation, and Control Conference, AIAA SciTech, (AIAA 2016-0882).

[2] Bailey, R.M., Hostetler, R.W., Barnes, K.N., Belcastro, Christine M., and Belcastro, Celeste M., "Experimental Validation: Subscale Aircraft Ground Facilities and Integrated Test Capability," *AIAA Guidance, Navigation, and Control Conference*, AIAA, San Francisco, CA, 2005.

[3] Laughter, S.A., "Expanding AirSTAR Capability for Flight Research in an Existing Avionics Design," *2012 IEEE/AIAA 31st Digital Avionics Systems Conference (DASC)*, Williamsburg, VA, 2012.

[4] *Avionics for Scaled Remotely Operated Vehicles*, Phase-II Final Report Contract No. NNX10RA21C, Coherent Technical Services, Inc., Lexington Park, MD, Feb. 2012.

[5] Grauer, J.A., "Aircraft Fault Detection Using Real-Time Frequency Response Estimation", AIAA Guidance, Navigation, and Control Conference, San Diego, CA, January 2016, AIAA SciTech, (AIAA 2016-0372).

[6] Morelli, E.A., "Real-Time Global Nonlinear Aerodynamic Modeling for Learn-To-Fly," *AIAA SciTech 2016 Conference, San Diego, CA, January 2016*, AIAA SciTech, (AIAA 2016-2010).