Co-adsorption of Ammonia and Formaldehyde on Regenerable Carbon Sorbents for the Primary Life Support System (PLSS)

Marek A. Wójtowicz,[1] Joseph E. Cosgrove,[2] and Michael A. Serio[3]
Advanced Fuel Research, Inc., East Hartford, Connecticut, 06108

and

Monique S. Wilburn[4]
NASA Johnson Space Center, Houston, Texas 77058

Results are presented on the development of a reversible carbon sorbent for trace-contaminant (TC) removal for use in Extravehicular Activities (EVAs), and more specifically in the Primary Life Support System (PLSS). The current TC-control technology involves the use of a packed bed of acid-impregnated granular charcoal, which is deemed non-regenerable, while the carbon-based sorbent under development in this project can be regenerated by exposure to vacuum at room temperature. Data on concurrent sorption and desorption of ammonia and formaldehyde, which are major TCs of concern, are presented in this paper. A carbon sorbent was fabricated by dry impregnation of a reticulated carbon-foam support with polyvinylidene chloride, followed by carbonization and thermal oxidation in air. Sorbent performance was tested for ammonia and formaldehyde sorption and vacuum regeneration, with and without water present in the gas stream. It was found that humidity in the gas phase enhanced ammonia-sorption capacity by a factor larger than two. Co-adsorption of ammonia and formaldehyde in the presence of water resulted in strong formaldehyde sorption (to the point that it was difficult to saturate the sorbent on the time scales used in this study). In the absence of humidity, adsorption of formaldehyde on the carbon surface was found to impair ammonia sorption in subsequent runs; in the presence of water, however, both ammonia and formaldehyde could be efficiently removed from the gas phase by the sorbent. The efficiency of vacuum regeneration could be enhanced by gentle heating to temperatures below 60 °C.

Nomenclature

CH_2O	=	formaldehyde
CO_2	=	carbon dioxide
EVA	=	extravehicular activity
FTIR	=	Fourier transform infrared
H_2O	=	water
N/A	=	not available
NASA	=	National Aeronautics and Space Administration
NH_3	=	ammonia
N_2	=	nitrogen
O_2	=	oxygen
PLSS	=	primary life support system

[1] Vice President, Clean Energy & Carbon Materials, Advanced Fuel Research, Inc., 87 Church Street, East Hartford, CT 06108.
[2] Senior Engineer, Advanced Fuel Research, Inc., 87 Church Street, East Hartford, CT 06108.
[3] President, Advanced Fuel Research, Inc., 87 Church Street, East Hartford, CT 06108.
[4] PLSS Engineer, NASA Johnson Space Center, EC5 - Space Suit & Crew Survival Systems, Houston, TX 77058.

ppi	=	pores per inch
PVDC	=	polyvinylidene chloride
RCA	=	rapid cycle amine
RH	=	relative humidity (%)
SMAC	=	spacecraft maximum allowable concentration
TC	=	trace contaminant
TCCS	=	trace contaminant control system
XPS	=	X-ray photoelectron spectroscopy

I. Introduction

THE future of space exploration is critically dependent on regenerable life support systems. This study addresses the development of regenerable carbon sorbents for trace-contaminant (TC) removal for the space suit used in extravehicular activities (EVAs). Paul and Jennings[1] reviewed the current state of the art and historical approaches to TC removal in the Primary Life Support System (PLSS), often referred to as the space suit backpack. Activated carbon (charcoal) was identified as a preferred sorbent for the trace contaminant control system (TCCS) application in terms of effectiveness, simplicity, and maturity of this technological solution. Carbon regeneration, however, has always been problematic, mainly because all carbons used to date were impregnated with phosphoric acid or other acidic compounds. In the current TC-control system (TCCS), granular activated carbon called Ammonasorb II is used to adsorb TCs, and especially ammonia, which is the main trace contaminant of interest. The carbon is impregnated with phosphoric acid to ensure strong ammonia sorption, but this also makes regeneration difficult. Temperatures as high as 200 °C were shown to be required for only partial desorption of ammonia on time scales of 18–140 hours.[1] Thus, the activated carbon has been treated as an expendable resource and the sorbent bed has been oversized to last throughout the entire mission (23 kg carbon for cabin-air revitalization and about 0.45 kg for the space suit).

Another important consideration in the design of TC sorbents and systems is pressure drop. Granular sorbents offer significant resistance to gas flow, which is associated with a high demand for fan power. Thus, a monolithic structure (e.g., a honeycomb), or a sorbent in the form of open-porosity foam, is desirable to reduce the pressure drop.

Recent work on trace-contaminant control led to the conclusion that ammonia and formaldehyde are the only two trace contaminants the concentration of which can exceed the Spacecraft Maximum Allowable Concentration (SMAC).[2] Although adsorption of ammonia on activated carbon has been studied extensively,[1,3–7] adsorption of formaldehyde, especially in the presence of ammonia, water, carbon dioxide, and oxygen, has not. The objective of the present study is to determine ammonia and formaldehyde sorption capacity and sorbent regeneration behavior under conditions relevant to TC control within the PLSS.

The work is focused on a single TC sorbent, which was developed at Advanced Fuel Research.[5–7] The high-purity, microporous carbon is obtained by carbonization of polyvinylidene chloride, which is followed by thermal oxidation by exposure to air at temperatures below 400 °C. It is believed that good TC-sorption capacity can be accomplished through the combination of: (1) a particularly favorable pore structure (microporosity, i.e. pores smaller than 2 nm) for optimum physical adsorption (physisorption) of TCs; and (2) carbon-surface conditioning that enhances adsorption without adversely affecting vacuum regeneration. Such enhancement of ammonia-sorption capacity by thermal oxidation of the carbon surface was reported previously. [5–7] Furthermore, the avoidance of acid impregnation of carbon helps the cause of adsorption reversibility. Finally, the issue of pressure drop and fan-power requirement is addressed through the use of a thin carbon sorbent layer deposited on a vitreous carbon foam structure with fairly open porosity (60 pores per inch).

Although the main interest is in vacuum regeneration, rapid resistive heating to moderate temperatures (up to 80 °C) is also considered as an optional feature that could accelerate the vacuum regeneration process. Such regeneration could be performed, for example, on board the spacecraft after an EVA has been completed. The time scale associated with a single EVA is not expected to exceed 8 hours, which defines sorbent-performance requirements.

II. Materials and Experimental Techniques

A. Carbon Sorbent Supported on Vitreous Carbon Foam

The sorbent used in this study was obtained by carbonization of PVDC procured from Goodfellow. The support employed in this work was Duocel® foam manufactured by ERG Aerospace Corporation. This foam is described as

an open-cell, porous structure consisting of an interconnected network of solid "struts," the porosity of which is determined by the number of pores per inch (ppi). 60 ppi foam was used in this study.

B. Carbon-Surface Treatment by Oxidation in Air

As described below, and also in references,[5,6] surface conditioning of the PVDC carbon via thermal oxidation at modest temperatures had a dramatic effect on ammonia adsorption. In experiments performed in this study, the sorbent was oxidized in ambient air at 350 °C for a period sufficient to achieve a PVDC carbon weight loss of about 50% (38 hours).

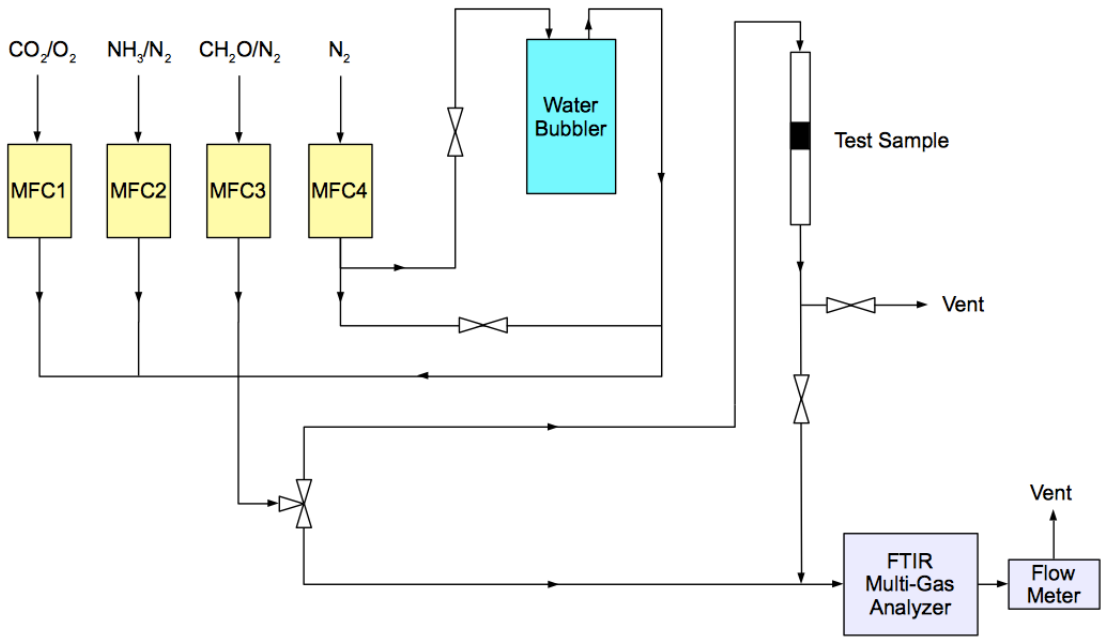

Figure 1. A schematic representation of the sorption testing apparatus; *MFC1*, *MFC2*, *MFC3*, and *MFC4* are mass-flow controllers.

C. Experimental Set-up and Procedures for Sorbent Testing

Figure 1 shows a schematic of the testing system used in this study. The system makes it possible to measure the adsorption capacity of carbon sorbents in the presence of all gases of interest: carbon dioxide, ammonia, formaldehyde, oxygen, nitrogen, and water vapor. The apparatus incorporates a Fourier transform infrared (FTIR) spectrometer-based On-Line Technologies model 2010 Multi-Gas Analyzer for quantification of infrared-active gas species, including ammonia, formaldehyde, carbon dioxide, and water.

Using mass-flow controllers, the initial gas mixtures were blended to achieve the desired gas concentration, which are: ~20 ppm ammonia, ~3 ppm formaldehyde, ~1.0 vol% carbon dioxide, 29.3 vol% oxygen, and balance nitrogen. The inlet concentration of ammonia was set at the 24-hour Spacecraft Maximum Allowable Concentration (SMAC) for this species, which is 20 ppm,[2] whereas the inlet concentration of formaldehyde (3 ppm) was selected on the basis of the detection limit and instrumentation sensitivity. The 24-hour and 7-day SMAC values for formaldehyde are 0.5 ppm and 0.1 ppm, respectively.[2] For humidifying the gas stream, the flow of nitrogen was rerouted through a water bubbler. During sorbent testing, the final mixture was first directed through a sample bypass line to establish the baseline gas concentration. It was then redirected through the sample cell for sorbent testing. The sample cell consisted of a glass tube that contained the sorbent. The tube was mounted in a vertical orientation, with the gas inlet at the top of the cell so that the gas flow was in a downward direction. A 22 mm inner diameter tube was used for testing sorbents supported on vitreous foam. The carbon sample was supported inside the tube with ceramic wool on both ends, and the sorbent height was 12.5 mm. At a gas flow rate of 1.2 L/min, the above sorbent geometry corresponds to a gas residence time within the sorbent of 0.238 s. Gas-concentration data were collected once every minute, and sorbent testing was performed for 700-1,500 min so that almost complete breakthrough was achieved in each run (at least 94% breakthrough). Sorption-capacity curves (amount of TC

adsorbed per gram sorbent versus time) were obtained from breakthrough curves (TC concentration versus time) by integrating the area above breakthrough curve from the beginning of the run until a given point in time to determine the cumulative amount of TC adsorbed.

For experiments involving sorbent regeneration in vacuum, the sample cell was removed from the test stand and installed in a high-vacuum chamber pumped by a turbomolecular pump (base vacuum of ~10^{-6} Torr). After the vacuum regeneration, the sample cell was reinstalled on the test stand and the ammonia and formaldehyde adsorption was measured again to determine the sorption capacity after regeneration.

Table 1. A summary of ammonia (NH_3) and formaldehyde (CH_2O) sorption experiments performed using sorbent 090115A under dry and humid conditions (RH is relative humidity). Inlet gas concentrations were ~20 ppm ammonia, ~3 ppm formaldehyde, ~1.0 vol% carbon dioxide, 29.3 vol% oxygen, and balance nitrogen (not all the gases were present in all the runs, as indicated in the table). The gas flow rate through a 22-mm ID tube was 1.2 L/min, and the adsorption temperature was 21 °C. %BT is percent breakthrough.

Run	Gas Mixture	RH (%)	Vacuum Regeneration Prior to Run	Sorption Capacity (mg / g PVDC carbon)		Run Time (min)	NH_3 %BT
				NH_3	***CH_2O***		
a	$NH_3/CO_2/O_2/N_2$	0	None	20.4	N/A	1,184	100
b	$NH_3/CO_2/O_2/N_2$	0	6 hours, room temp.	10.4	N/A	1,144	100
c	$NH_3/CO_2/O_2/H_2O/N_2$	60	6 hours, room temp.	25.6	N/A	1,445	94
d	$CH_2O/CO_2/O_2/N_2$	0	6 hours, room temp.	N/A	10.0	1,227	N/A
e	$CH_2O/CO_2/O_2/N_2$	0	6 hours, room temp.	N/A	3.53	1,053	N/A
f	$NH_3/CO_2/O_2/N_2$	0	6 hours, room temp.	6.67	N/A	864	96
g	$CH_2O/NH_3/CO_2/O_2/H_2O/N_2$	60	6 hours, room temp.	19.5	> 10*	1,059	94
h	$CH_2O/NH_3/CO_2/O_2/N_2$	0	6 hours, 60 °C	14.2	> 7.8*	834	94
i	$CH_2O/NH_3/CO_2/O_2/N_2$	0	6 hours, 60 °C	12.8	> 9.6*	1,099	96
j	$CH_2O/NH_3/CO_2/O_2/H_2O/N_2$	51	6 hours, 60 °C	21.4	> 9.5*	1,009	96
k	$CH_2O/NH_3/CO_2/O_2/H_2O/N_2$	35	6 hours, 50 °C	18.5	> 7.2*	740	94
l	$CH_2O/NH_3/CO_2/O_2/H_2O/N_2$	35	6 hours, 60 °C	19.0	> 8.8*	1,073	94
m	$CH_2O/NH_3/CO_2/O_2/H_2O/N_2$	35	6 hours, room temp.	9.95	> 6.1*	819	99

*Breakthrough was not observed, so the maximum sorption capacity is unknown.

III. Results and Discussion

A. Ammonia Sorption and Sorbent Regeneration

Several runs involving adsorption of ammonia and formaldehyde were performed under dry conditions, and also in the presence of water. The aims of these experiments were: (1) to determine the formaldehyde adsorption capacity before and after sorbent regeneration in vacuum; (2) to determine whether there exist positive or negative interactions during the concurrent adsorption of ammonia and formaldehyde on the carbon surface; and (3) to determine the effect of humidity on ammonia and formaldehyde adsorption. Conditions under which thirteen sequential experiments *a* through *m* were conducted, as well as results, are presented in Table 1, Figure 2, and Figure 3.

For the sake of establishing a reference sorption capacity, initial ammonia-sorption experiments *a* and *b* were performed in an atmosphere of dry gas. After the ammonia breakthrough occurred in run *a*, the saturated sorbent sample was regenerated by exposure to high vacuum at room temperature for six hours. The measurement was repeated after regeneration, again in a flow of dry gas (run *b*). The sorbent sample was then vacuum regenerated again, as described above, and another ammonia-sorption measurement was carried out, this time at a relative humidity (RH) of 60% (~1.6 vol% water at ~22 °C). The above experiments were followed by run *d*, in which the

(A)

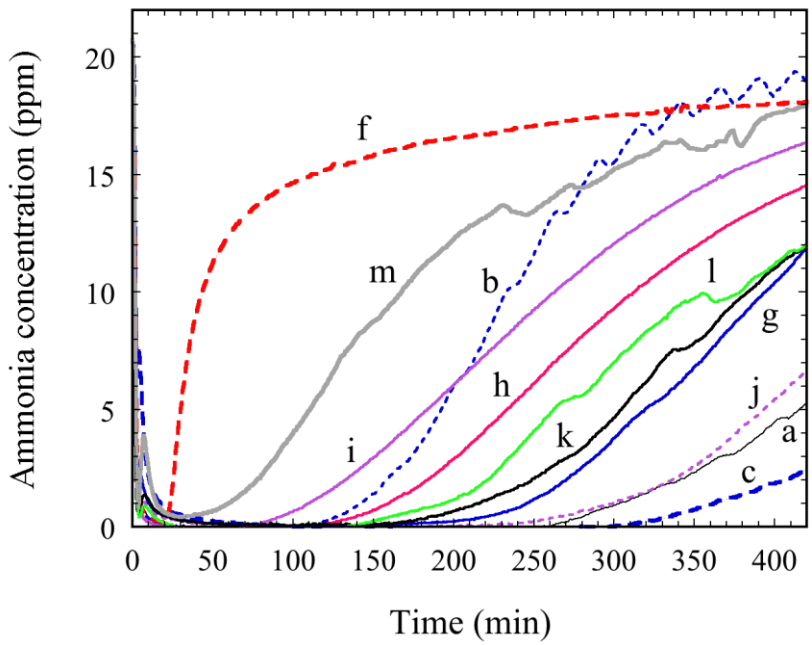

(B)

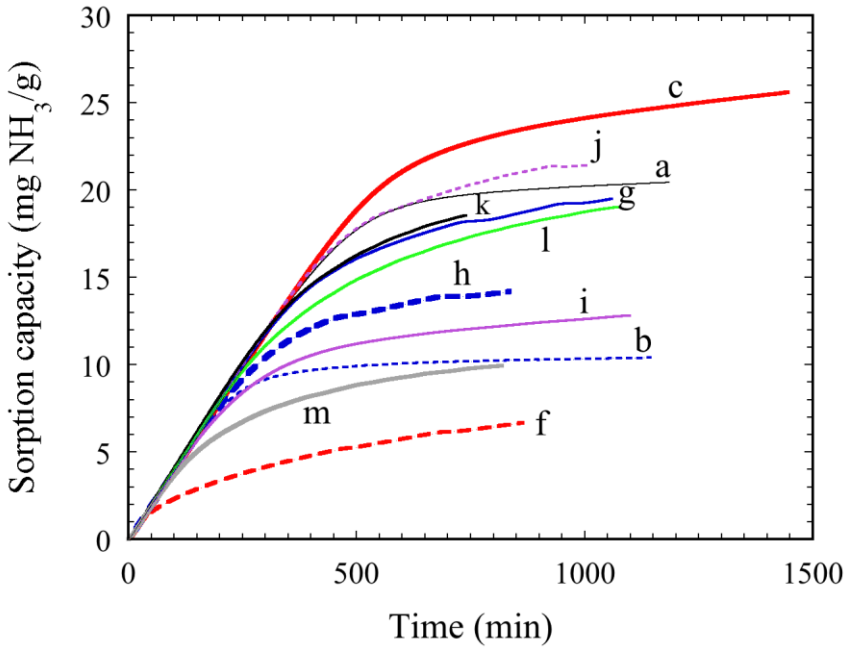

Figure 2. Ammonia-sorption breakthrough curves (A) and ammonia-sorption capacity curves (B) for runs listed in Table 1: (a) 1st cycle (dry gas); (b) 2nd cycle (dry gas); (c) 3rd cycle (RH = 60%); (f) 6th cycle (dry gas; after 2 formaldehyde-sorption runs); (g) 7th cycle (co-adsorption of ammonia and formaldehyde; RH = 60%); (h) 8th cycle (co-adsorption of ammonia and formaldehyde; dry gas; after regeneration at 60 °C); (i) 9th cycle (co-adsorption of ammonia and formaldehyde; dry gas; after regeneration at 60 °C); (j) 10th cycle (co-adsorption of ammonia and formaldehyde; RH = 51%; after regeneration at 60 °C); (k) 11th cycle (co-adsorption of ammonia and formaldehyde; RH = 35%; after regeneration at 50 °C); (l) 12th cycle (co-adsorption of ammonia and formaldehyde; RH = 35%; after regeneration at 60 °C); (m) 13th cycle (co-adsorption of ammonia and formaldehyde; RH = 35%; after regeneration at room temperature).

(A)

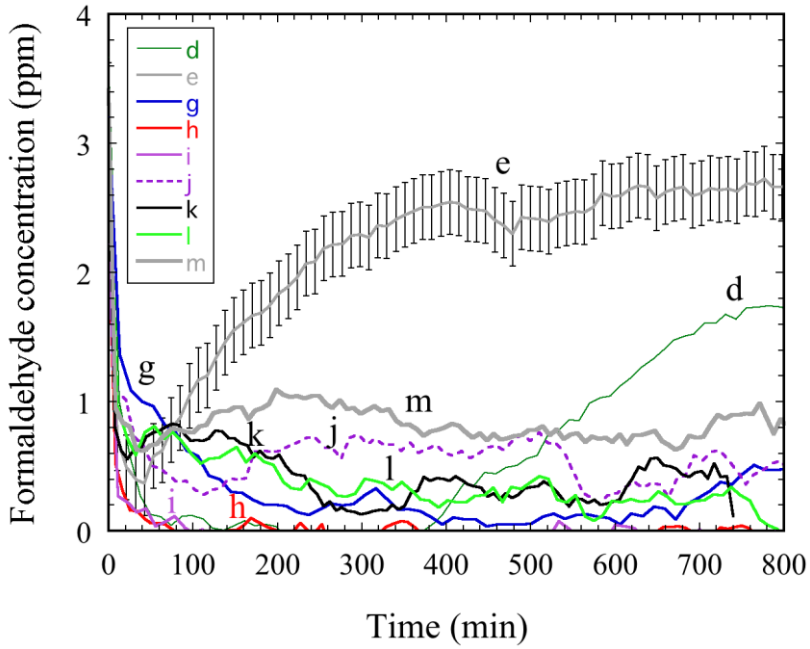

(B)

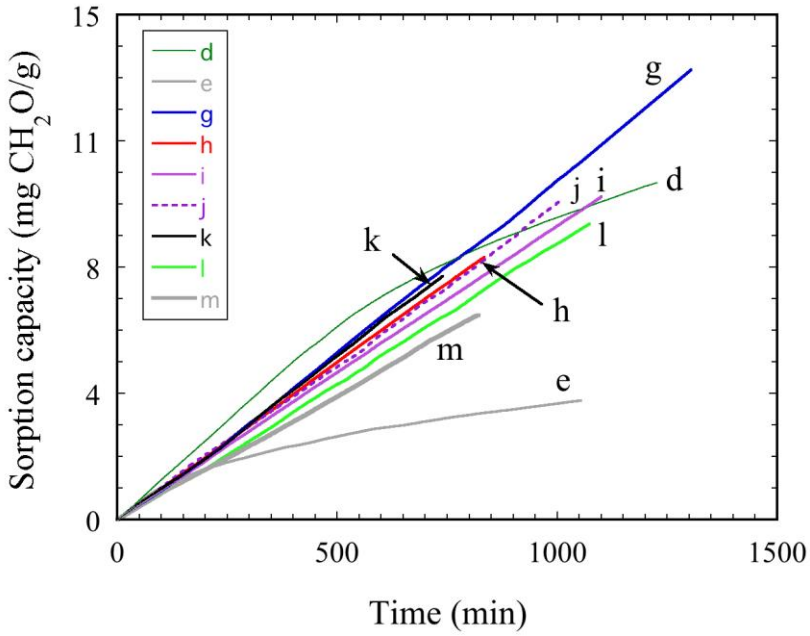

Figure 3. Formaldehyde-sorption breakthrough curves (A) and formaldehyde-sorption capacity curves (B) for runs listed in Table 1: (d) 4th cycle (dry gas); (e) 5th cycle (dry gas); (g) 7th cycle (co-adsorption of ammonia and formaldehyde; RH = 60%); (h) 8th cycle (co-adsorption of ammonia and formaldehyde; dry gas; after regeneration at 60 °C); (i) 9th cycle (co-adsorption of ammonia and formaldehyde; dry gas; after regeneration at 60 °C); (j) 10th cycle (co-adsorption of ammonia and formaldehyde; RH = 51%; after regeneration at 60 °C); (k) 11th cycle (co-adsorption of ammonia and formaldehyde; RH = 35%; after regeneration at 50 °C); (l) 12th cycle (co-adsorption of ammonia and formaldehyde; RH = 35%; after regeneration at 60 °C); (m) 13th cycle (co-adsorption of ammonia and formaldehyde; RH = 35%; after regeneration at room temperature). Error bars shown in (A) are similar for all curves and, for the sake of clarity, they are shown only for run (e).

sorption of formaldehyde was studied in the absence of ammonia under dry-gas conditions. The sorbent was then regenerated in vacuum for 6 hours, and the formaldehyde-sorption measurements were repeated (run *e*). The next experiment involved ammonia sorption in the absence of formaldehyde under dry-gas conditions (run *f*), which was followed by vacuum regeneration for 6 hours. In the final seven runs, *g* through *m*, both ammonia and formaldehyde were present in the gas mixture. Run *g* was carried out at a relative humidity of 60%, whereas runs *h* and *i* were performed under dry-gas conditions. The relative humidity was 51% in run *j* and 35% in runs *k* through *m*. Vacuum regeneration that preceded runs *h*, *i*, *j*, and *l* was performed at 60 °C for 6 hours, whereas the regeneration temperature prior to runs *k* and *m* was 50 °C and room temperature, respectively.

The following observations are made on the basis of data presented in Table 1, Figure 2, and Figure 3: (1) foam-supported PVDC carbon sorbent shows ammonia-sorption comparable to that of acid-impregnated carbons, such as Ammonasorb II (~20 mg NH_3 / g sorbent[3–5]); (2) about half of the initial ammonia-sorption capacity is recovered after the first regeneration; (3) the presence of humidity in the gas phase enhances the ammonia sorption capacity after regeneration by a factor larger than two; (4) about one third of the initial formaldehyde-sorption capacity is recovered after the first regeneration; (5) the presence of humidity in the gas phase in the range 35%–60% RH greatly enhances formaldehyde sorption (to the point that it is difficult to saturate the sorbent on the time scales used in this study); (6) in the absence of humidity, adsorption of formaldehyde on the carbon surface impairs ammonia sorption in subsequent runs; in the presence of water, however, both ammonia and formaldehyde can be efficiently removed from the gas phase by the sorbent (compare runs *f* and *g*); (7) in the absence of humidity, excellent ammonia and formaldehyde sorption capacities can be achieved if vacuum regeneration is carried out at 60 °C. Even lower regeneration temperatures produce good results, as shown by data for 50 °C.

The question of long-term sorbent performance still needs to be addressed in future research, although our previous work on ammonia adsorption and vacuum regeneration demonstrated reproducible ammonia sorption capacity from cycle to cycle for consecutive cycles 2 through 9, with the significant loss of sorption capacity observed only between cycle 1 and 2.[5,7] This can be explained by the existence of a distribution of active sites on the carbon surface, the "strong" sites being responsible for the ammonia-carbon adsorption that is irreversible under the regeneration conditions used in our study (typically several hours in vacuum at room temperature). It is quite possible that these sites could be recovered for ammonia sorption, if vacuum regeneration is replaced by, or complemented by, thermal regeneration. Data presented in Table 1 and Figure 2 of this paper certainly support this mechanism, although a more systematic study is needed to clarify and quantify the effect of regeneration temperature. In particular, using temperatures lower than 50 °C for sorbent regeneration, if possible, would be associated with benefits of great practical importance. In contrast to the "strong" adsorption sites, the "weak" sites present on the carbon surface are associated with weaker van der Waals interactions between ammonia and carbon, and these sites are deemed fully regenerable upon exposure to vacuum, without the need to heat the sorbent. At this stage, there is no reason to believe that the adsorption/regeneration mechanism for formaldehyde is any different from the one for ammonia, as described above, but a more detailed study is certainly warranted.

The question of possible chemical reactions taking place on the carbon surface will also need to be investigated. One such reaction may be a reaction between carbon dioxide and ammonia, but we have not seen any noticeable sorbent degradation upon repeated sorbent exposure to a gas mixture containing both gases.[5] Another reaction of interest is a reaction between ammonia and formaldehyde, which may be responsible for the observed reduction in ammonia sorption in the presence of formaldehyde under dry-gas conditions. A future study involving X-ray photoelectron spectroscopy (XPS) may shed light on the composition of species adsorbed on the carbon surface and the possible reaction mechanisms. Also, the use of formaldehyde concentrations closer to those typical for EVA (SMAC = 0.04–0.1 ppm) is desirable in the future, but this will require improved formaldehyde quantification.

The observed enhancement of both ammonia and formaldehyde sorption by the presence of water can be explained by the dissolution of both adsorbates in the water present in the condensed form within the carbon micropores. Ammonia and formaldehyde are both known to be water-soluble, and the high percentage of microporosity (pores smaller than 2 nm) in the PVDC carbon is conducive to moisture condensation within the pores. This phenomenon is limited to the sorbent internal pore structure, without the concern that the sorbent bed could be flooded by water as the sorbent temperature is always maintained above the dew point. The largely microporous nature of PVDC carbon is well documented in the literature,[8-10] and it is an important feature that distinguishes PVDC carbon from most activated carbons, which contain appreciable amounts of mesoporosity and macroporosity (pores larger than 2 nm) in addition to micropores.

In the context of EVA application, system engineering of the future TCCS will determine the required operating parameters, such as the sorbent mass, the desired frequency of regeneration, etc. The TC control assembly is expected to provide adequate trace-contaminant removal for at least a single EVA, and preferably for several EVAs, after which the sorbent will be vacuum regenerated on board spacecraft. For example, if an assumption of 250 hours

of EVAs is made, i.e. about 31 eight-hour EVAs, and an ammonia sorption capacity is ~9 mg/g sorbent (see Table 1), then the amount of sorbent needed can be shown to be approximately 288 g, assuming an ammonia-generation rate of 83 mg per 8 hours. If regeneration is assumed to take place after each EVA, the sorbent requirement is lower than 10 g. Although these are just rough estimates that do not take into account real performance considerations, such as sorbent geometry, residence time, vent loop circulation rates, and pressure drop, they nonetheless demonstrate the potential cost savings and performance enhancements of regenerable trace-contaminant sorbents. Specific design considerations are beyond the scope of this study, and they will be addressed in future work. An intriguing possibility would be the use of a small TC control unit in a pressure-swing fashion, with several adsorption-regeneration cycles performed on a time scale of a single EVA, but this would require improvements in the speed of desorption.

IV. Conclusions

Humidity plays an important role in co-adsorption of ammonia and formaldehyde on a carbon sorbent derived from polyvinylidene chloride. The presence of humidity in the gas phase enhances ammonia-sorption capacity by a factor larger than two. Co-adsorption of ammonia and formaldehyde in the presence of water results in high sorption capacities for both species. In the absence of humidity, however, adsorption of formaldehyde on the carbon surface was found to impair ammonia sorption in subsequent runs. The efficiency of vacuum regeneration can be enhanced by gentle heating to temperatures up to 60 °C.

The beneficial effect of humidity on both ammonia and formaldehyde sorption capacities leads to the conclusion that serious consideration should be given to the idea of placing the TC control unit upstream of the rapid-cycle amine (RCA) system in the ventilation loop. The RCA system was shown to remove moisture from the gas flow so efficiently that it essentially eliminated the need for the condensing heat exchanger in the PLSS.[11] Since the presence of moisture makes trace-contaminant control more efficient, it makes sense to adsorb TCs before water gets removed from the loop.

Future work will focus on improving the effectiveness of regeneration and integration with the PLSS.

Acknowledgments

Financial support for the project was provided by NASA under Contract No. NNX14CJ09C. The authors wish to acknowledge helpful discussions with Dr. Timothy Nalette and Mr. William Papale of United Technologies Aerospace Systems.

References

[1]Paul, H. L. and Jennings, M. A., "Results of the trace contaminant control trade study for space suit life support development," *Proc. 39th Int. Conf. on Environmental Systems (ICES)*, Savannah, Georgia, July 12-16, 2009, SAE technical paper No. 2009-01-2370, SAE International, 2009.

[2]James, J., "Spacecraft Maximum Allowable Concentrations for Airborne Contaminants," JSC-20584, Houston: NASA/Johnson Space Center, November 2008.

[3]Luna, B., Podolske, J., Ehresmann, D., Howard, J., Salas, L. J., Mulloth, L., and Perry, J. L., "Evaluation of commercial off-the-shelf ammonia sorbents and carbon monoxide oxidation catalysts," *Proc. 38th Int. Conf. on Environmental Systems (ICES)*, San Francisco, California, June 29-July 2, 2008, SAE technical paper No. 2008-01-2097, SAE International, 2008.

[4]Luna, B., Somi, G., Winchester, J. P., Grose, J., Mulloth, L., and Perry, J., "Evaluation of commercial off-the-shelf sorbents and catalysts for control of ammonia and carbon monoxide," *Proc. 40th Int. Conf. on Environmental Systems (ICES)*, Barcelona, Spain, July 11-15, 2010, AIAA technical paper No. 2010-6062, AIAA, 2010.

[5]Wójtowicz, M. A., Cosgrove, J. E., Serio, M. A., and Jennings, M. A., "Reversible ammonia sorption on carbon for the Primary Life Support System (PLSS)," *Proc. 42nd Int. Conf. on Environmental Systems (ICES)*, San Diego, California, July 15-19, technical paper No. AIAA-2012-3437, AIAA, 2012.

[6]Wójtowicz, M. A., Cosgrove, J. E., Serio, M. A., Manthina, V. Singh, P., and Chullen, C., "Carbon-based regenerable sorbents for the combined carbon dioxide and ammonia removal for the Primary Life Support System (PLSS)," *Proc. 44th International Conference on Environmental Systems (ICES)*, Tucson, Arizona, 13-17 July 2014, technical paper No. ICES-2014-241, AIAA, 2014.

[7]Wójtowicz, M. A., Cosgrove, J. E., and Serio, M. A., "Carbon sorbent for reversible ammonia sorption," U.S. Patent No. 9,073,039 (2015).

[8]Walker, P. L., Jr., Austin, L. G., and Nandi, S. P., "Activated Diffusion of Gases in Molecular-Sieve Materials," in *Chemistry and Physics of Carbon*, P. L. Walker, Jr. (Ed.), vol 2, Marcel Dekker, New York, 1966.

[9]Wójtowicz, M. A., Markowitz, B. L., Smith, W. W. and Serio, M. A., "Microporous carbon adsorbents for hydrogen storage," *Int. Journal of the Society of Materials Engineering for Resources* **7** (2), 253–266, 1999.

[10]Wójtowicz, M. A., Cosgrove, J. E., Serio, M. A., and Wilburn, M. S., "Adsorption of ammonia on regenerable carbon sorbents," *Proc. 45th International Conference on Environmental Systems (ICES)*, Bellevue, Washington, 12-16 July, 2015, technical paper No. ICES-2015-179, 2015.

[11]Chullen, C., Papale, W., Campbell, C., Hawes, K., and Wichowski, R., "Rapid cycle amine (RCA) 3.0 system development," technical paper No. ICES-2015-313, *Proc. 45th Int. Conf. on Environmental Systems (ICES)*, Bellevue, WA, July 12-16, 2015.