https://ntrs.nasa.gov/search.jsp?R=20170000213 2019-04-29T08:03:04+00:00Z

US009531303B2

(12) **United States Patent**
Sherrit et al.

(10) **Patent No.: US 9,531,303 B2**
(45) **Date of Patent: Dec. 27, 2016**

(54) **FLOW ENERGY PIEZOELECTRIC BIMORPH NOZZLE HARVESTER**

(71) Applicants: **California Institute of Technology**, Pasadena, CA (US); **CHEVRON U.S.A. INC.**, San Ramon, CA (US)

(72) Inventors: **Stewart Sherrit**, La Crescenta, CA (US); **Phillip E. Walkemeyer**, Pasadena, CA (US); **Jeffrey L. Hall**, Pasadena, CA (US); **Hyeong Jae Lee**, Pasadena, CA (US); **Tim Colonius**, Sierra Madre, CA (US); **Phillipe Tosi**, Houston, TX (US); **Namhyo Kim**, Houston, TX (US); **Kai Sun**, Missouri City, TX (US); **Thomas Gary Corbett**, Willis, TX (US); **Alvaro Jose Arrazola**, Houston, TX (US)

(73) Assignees: **CALIFORNIA INSTITUTE OF TECHNOLOGY**, Pasadena, CA (US); **CHEVRON U.S.A. INC.**, San Ramon, CA (US)

(*) Notice: Subject to any disclaimer, the term of this patent is extended or adjusted under 35 U.S.C. 154(b) by 412 days.

(21) Appl. No.: **14/261,412**

(22) Filed: **Apr. 24, 2014**

(65) **Prior Publication Data**

US 2014/0319970 A1 Oct. 30, 2014

Related U.S. Application Data

(60) Provisional application No. 61/815,647, filed on Apr. 24, 2013.

(51) **Int. Cl.**

H01L 41/08	(2006.01)
H02N 2/18	(2006.01)
H01L 41/113	(2006.01)

(52) **U.S. Cl.**
CPC ***H02N 2/185*** (2013.01); *H01L 41/1136* (2013.01)

(58) **Field of Classification Search**
CPC H02N 2/185; H01L 41/1136
(Continued)

(56) **References Cited**

U.S. PATENT DOCUMENTS

5,823,265 A * 10/1998 Crow E21B 34/06 166/110
7,453,187 B2 11/2008 Richards et al.
(Continued)

FOREIGN PATENT DOCUMENTS

JP 2005-292941 A 10/2005
WO WO 2007/071975 A1 6/2007

OTHER PUBLICATIONS

International Search Report and Written Opinion for International Application No. PCT/US2014/035374, mailed Sep. 1, 2014, 9 pages.

Primary Examiner — Thomas Dougherty
Assistant Examiner — Karen B Addison
(74) *Attorney, Agent, or Firm* — Lewis Roca Rothgerber Christie LLP

(57) **ABSTRACT**

A flow energy harvesting device having a harvester pipe includes a flow inlet that receives flow from a primary pipe, a flow outlet that returns the flow into the primary pipe, and a flow diverter within the harvester pipe having an inlet section coupled to the flow inlet, a flow constriction section coupled to the inlet section and positioned at a midpoint of the harvester pipe and having a spline shape with a substantially reduced flow opening size at a constriction point along the spline shape, and an outlet section coupled to the constriction section. The harvester pipe may further include a piezoelectric structure extending from the inlet section through the constriction section and point such that the fluid
(Continued)

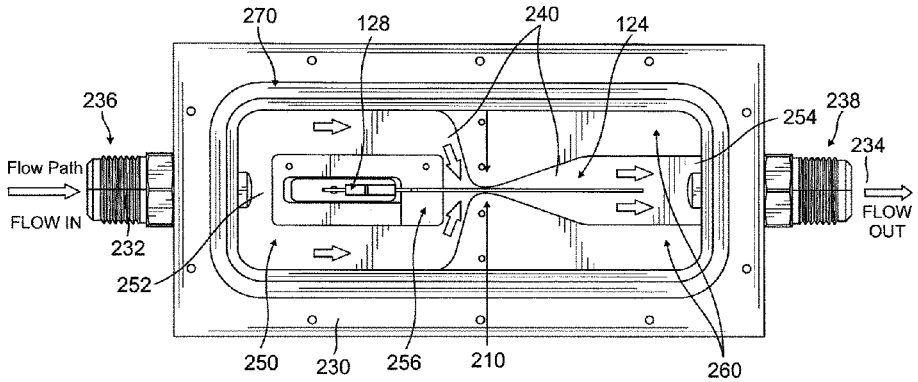

flow past the constriction point results in oscillatory pressure amplitude inducing vibrations in the piezoelectric structure sufficient to cause a direct piezoelectric effect and to generate electrical power for harvesting.

20 Claims, 24 Drawing Sheets

(58) **Field of Classification Search**
USPC 310/339, 330, 332, 328
IPC H02N 2/18
See application file for complete search history.

(56) **References Cited**

U.S. PATENT DOCUMENTS

2009/0140604	A1*	6/2009	Chen	E21B 41/0085 310/311
2012/0119621	A1	5/2012	Frey et al.	

* cited by examiner

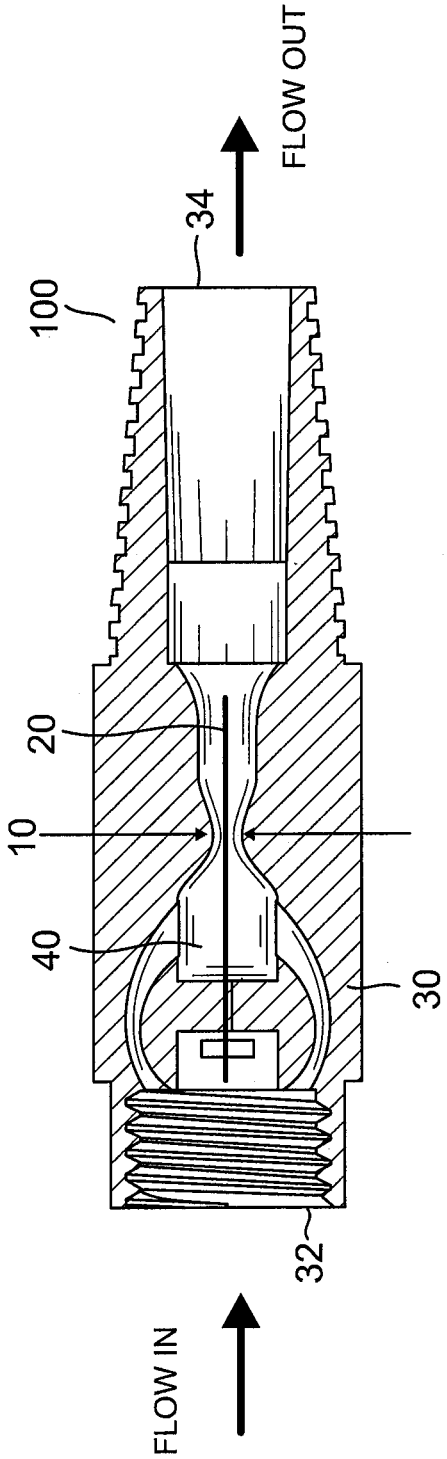

FIG. 1

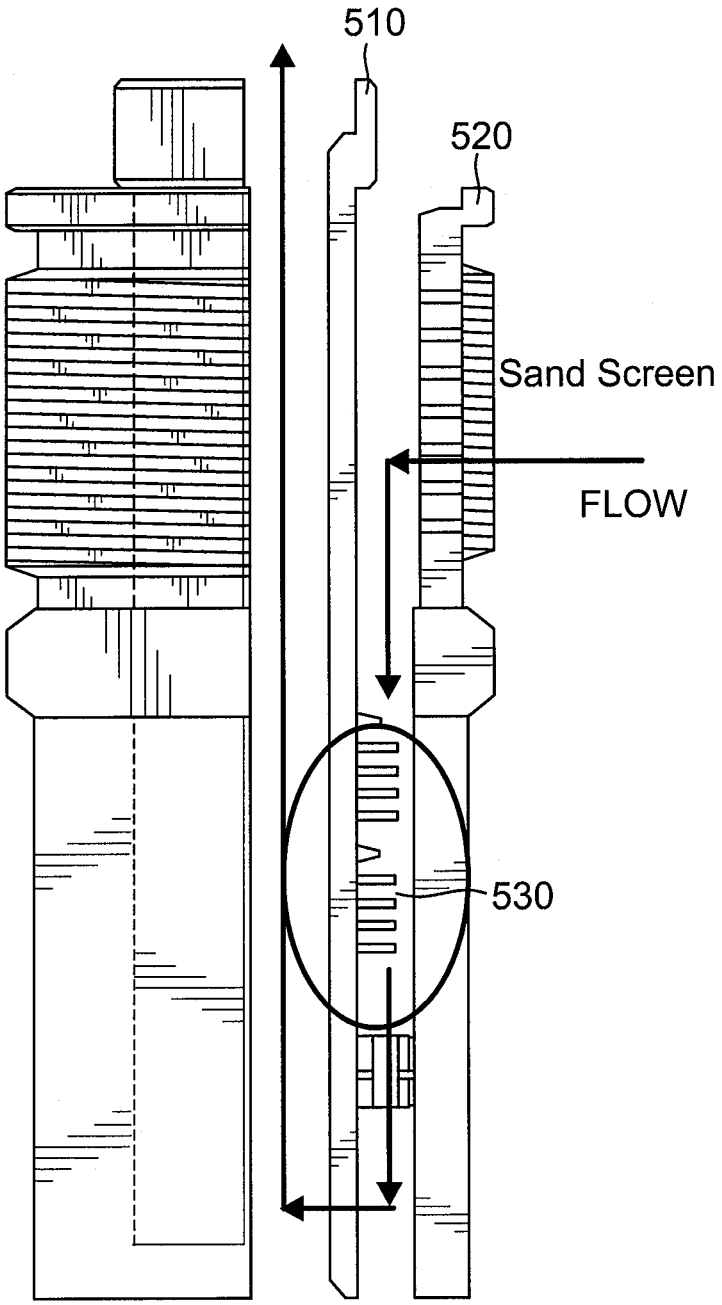

FIG. 2

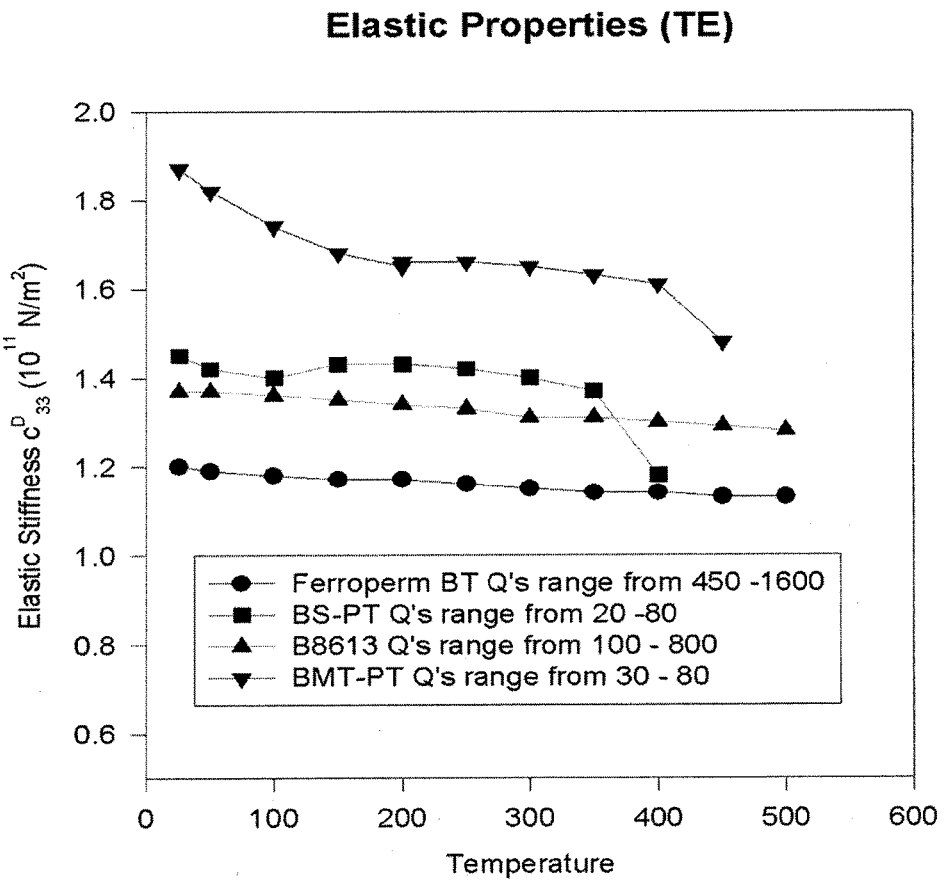
Elastic Properties (TE)
Elastic Stiffness c^D_{33} (10^{11} N/m^2)
2.0
1.8
1.6
1.4
1.2
1.0
0.8
0.6
0
100
200
300
400
500
600
Temperature
Ferroperm BT Q's range from 450 -1600
BS-PT Q's range from 20 -80
B8613 Q's range from 100 - 800
BMT-PT Q's range from 30 - 80

FIG. 3A

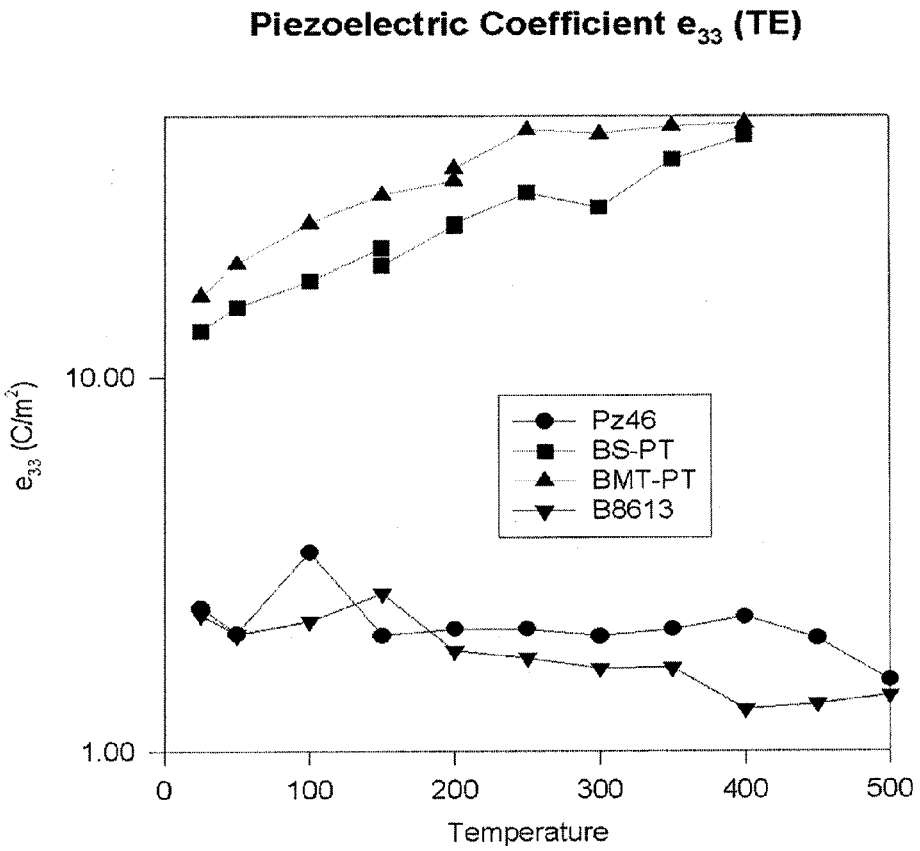
Piezoelectric Coefficient e33 (TE)
e33 (C/m2)
10.00
1.00
0
100
200
300
400
500
Temperature
Pz46
BS-PT
BMT-PT
B8613

FIG. 3B

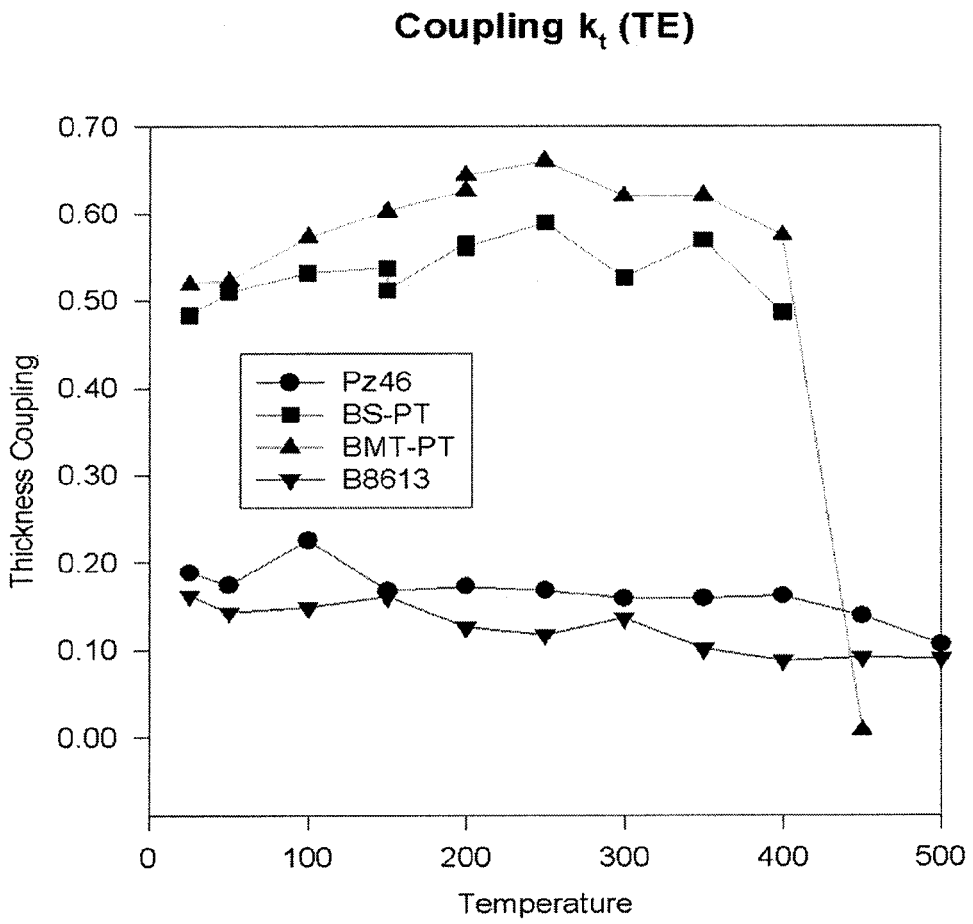
Coupling k_t (TE)
0.70
0.60
0.50
0.40
0.30
0.20
0.10
0.00
Thickness Coupling
Pz46
BS-PT
BMT-PT
B8613
0
100
200
300
400
500
Temperature

FIG. 3C

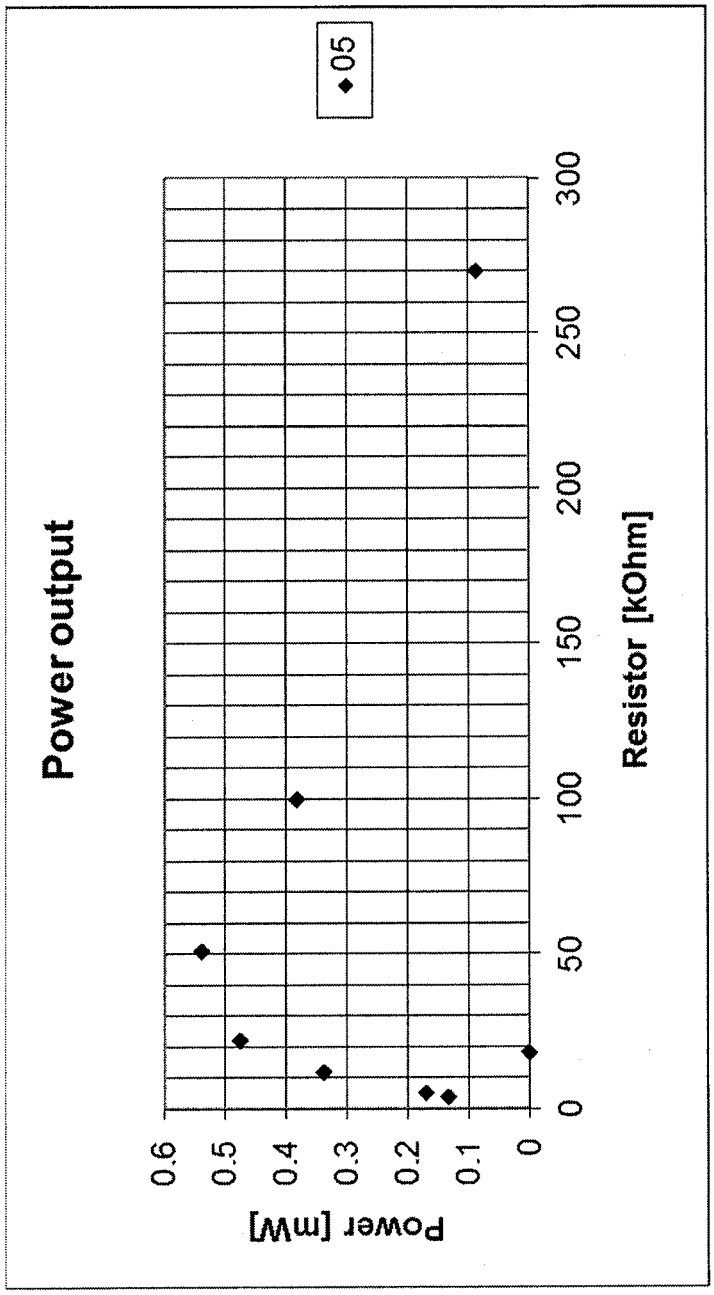
Power output
Power [mW]
0.6
0.5
0.4
0.3
0.2
0.1
0
0
50
100
150
200
250
300
Resistor [kOhm]
05

FIG. 4

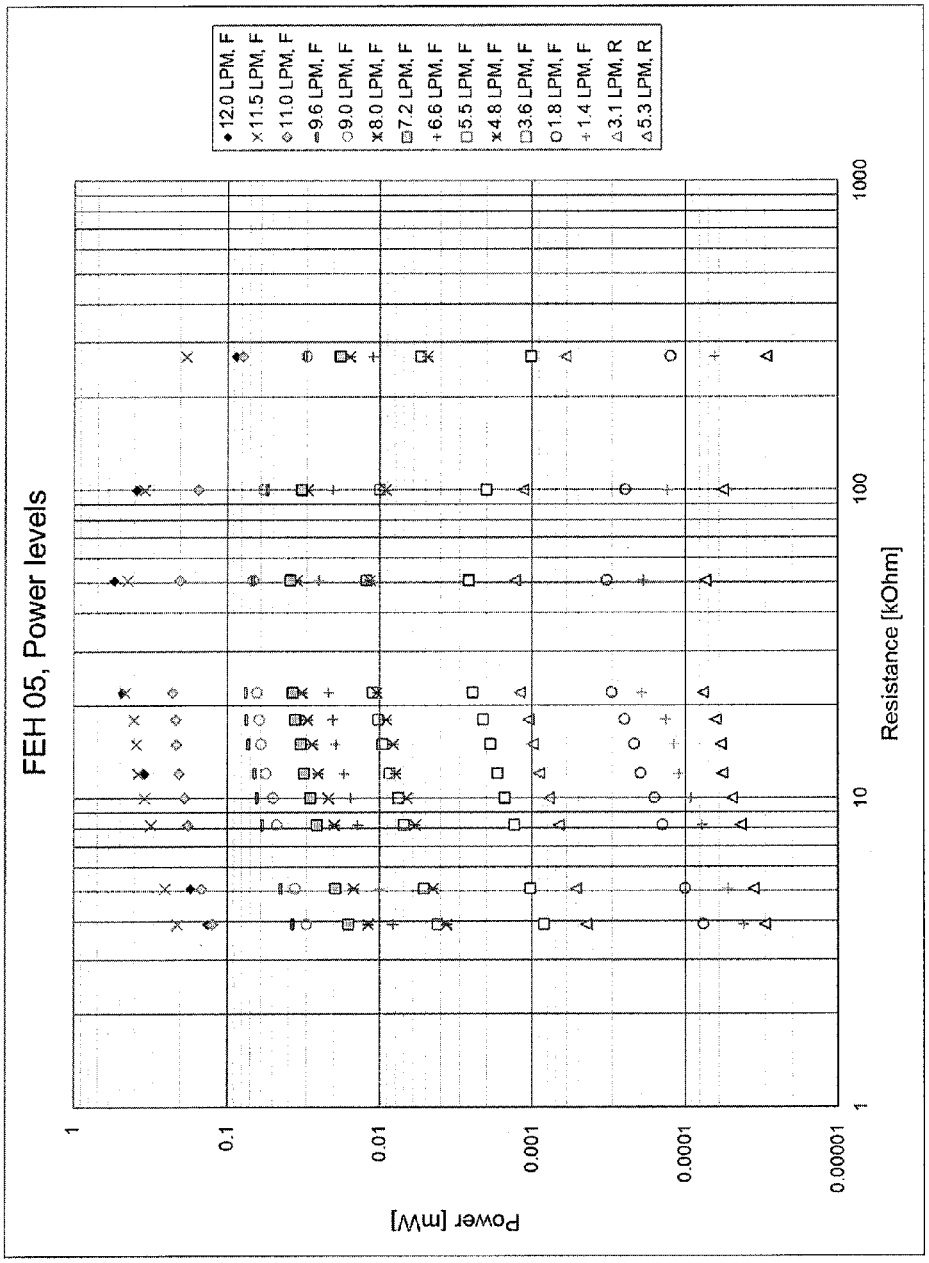
FEH 05, Power levels
Power [mW]
1
0.1
0.01
0.001
0.0001
0.00001
Resistance [kOhm]
1
10
100
1000
12.0 LPM, F
11.5 LPM, F
11.0 LPM, F
9.6 LPM, F
9.0 LPM, F
8.0 LPM, F
7.2 LPM, F
6.6 LPM, F
5.5 LPM, F
4.8 LPM, F
3.6 LPM, F
1.8 LPM, F
1.4 LPM, F
3.1 LPM, R
5.3 LPM, R

FIG. 5

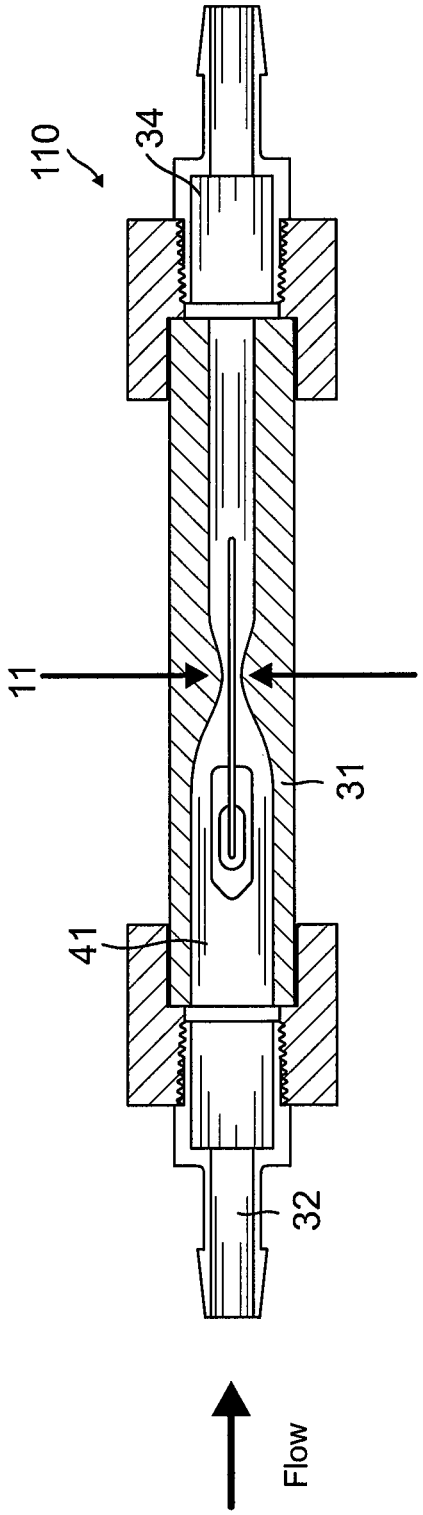

FIG. 6

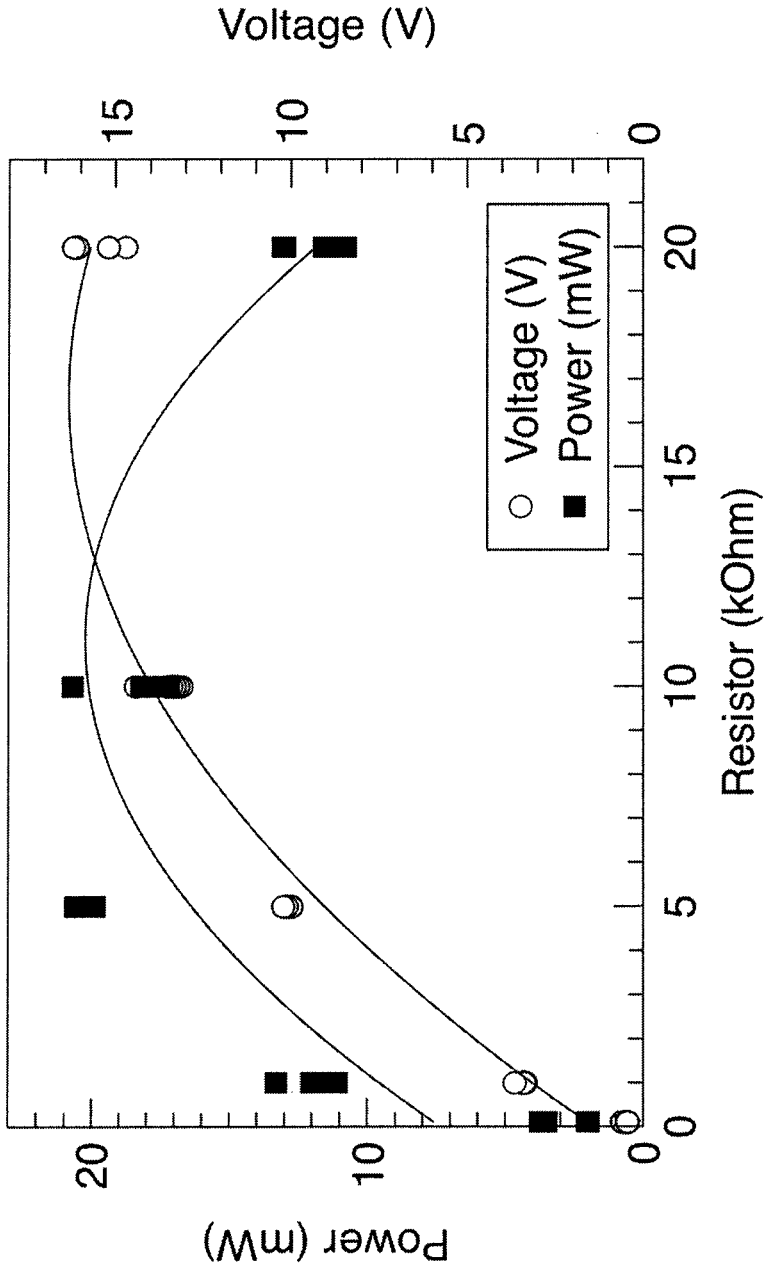
Voltage (V)
15
10
5
0
Power (mW)
20
10
0
0
5
10
15
20
Resistor (kOhm)
Voltage (V)
Power (mW)

FIG. 7

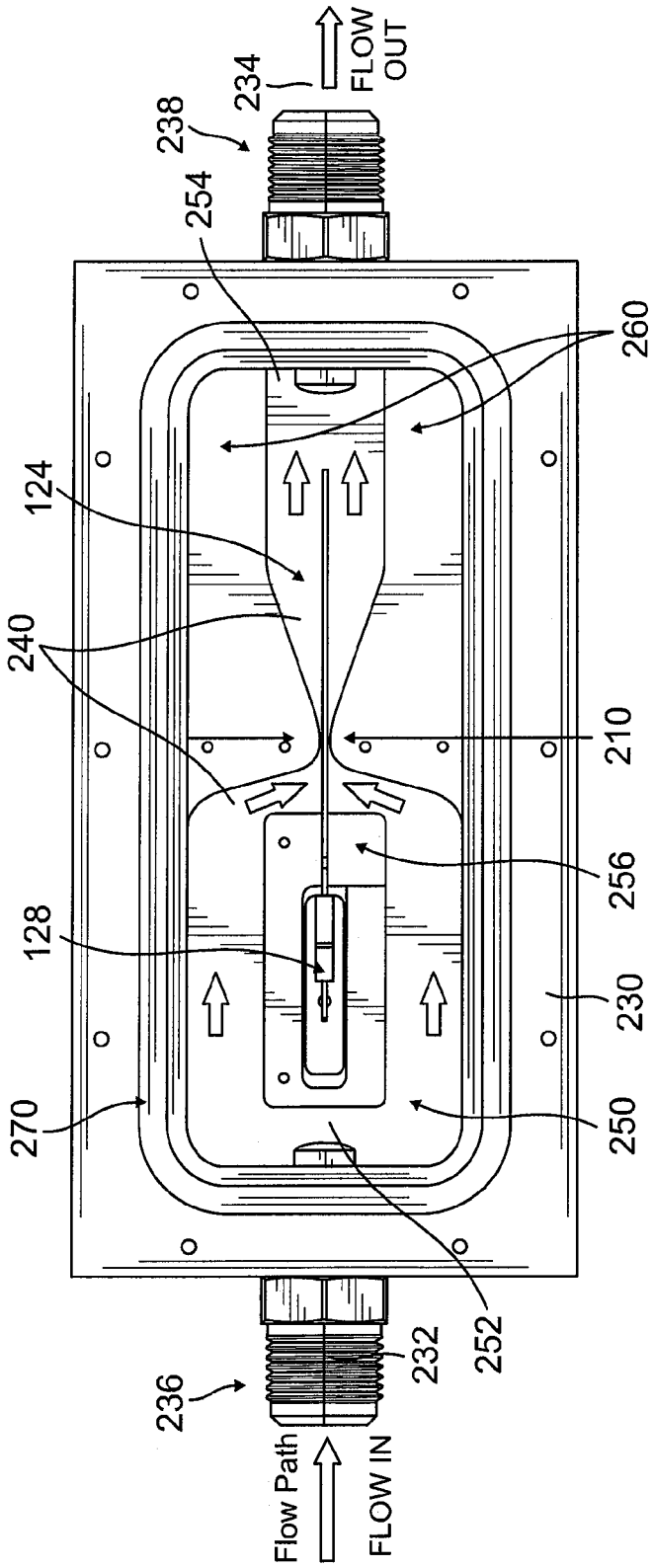
FLOW OUT
234
238
254
260
124
240
210
256
128
230
270
250
252
232
236
Flow Path
FLOW IN

FIG. 8A

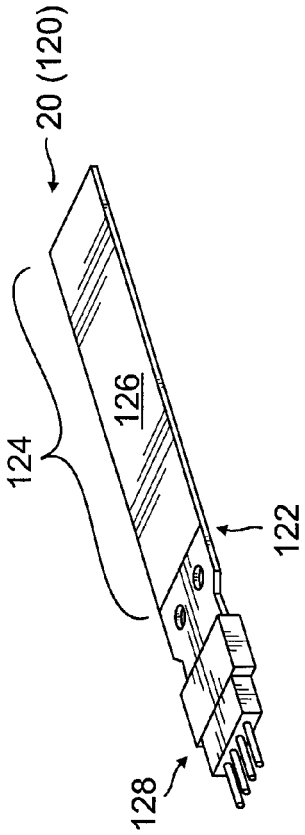

FIG. 8B

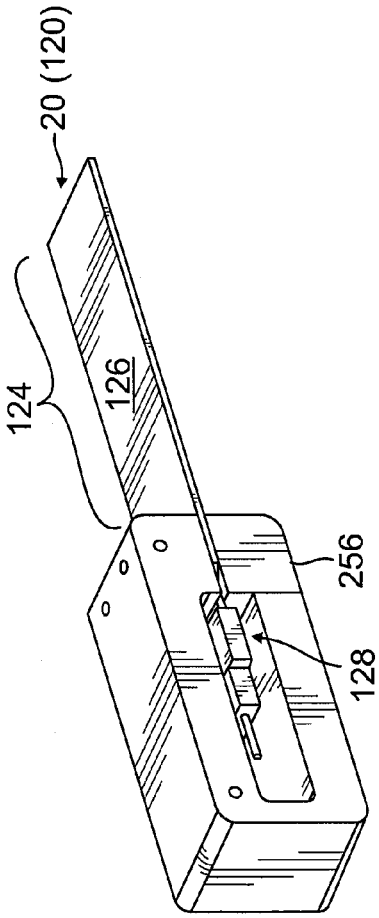

FIG. 8C

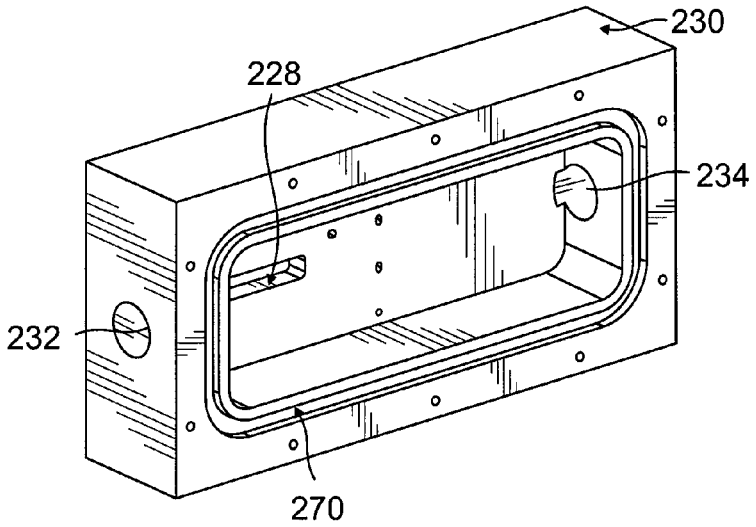

FIG. 8D

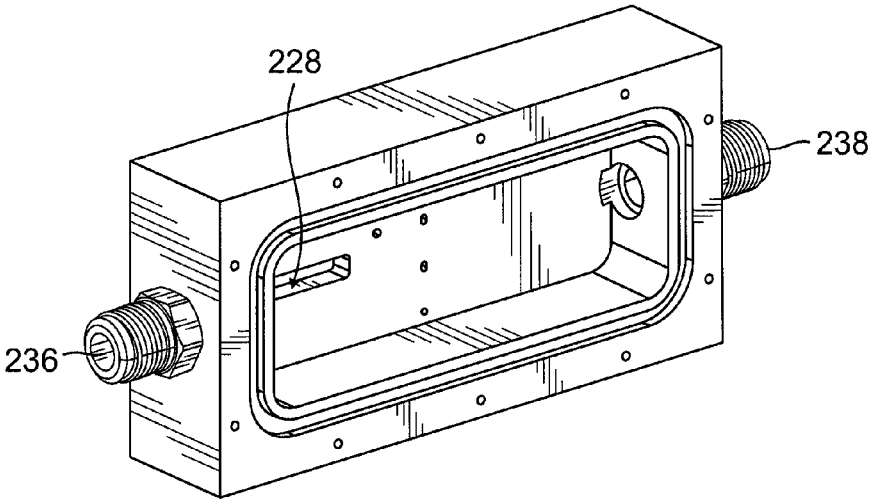

FIG. 8E

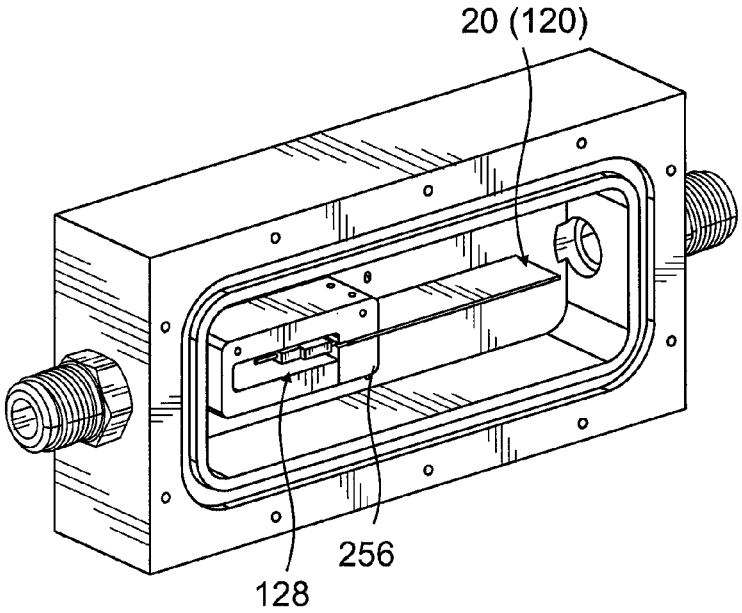

FIG. 8F

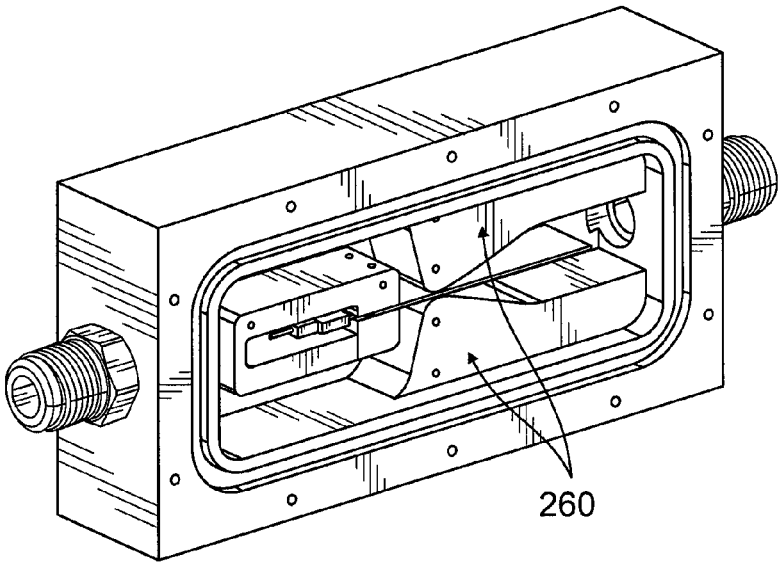

FIG. 8G

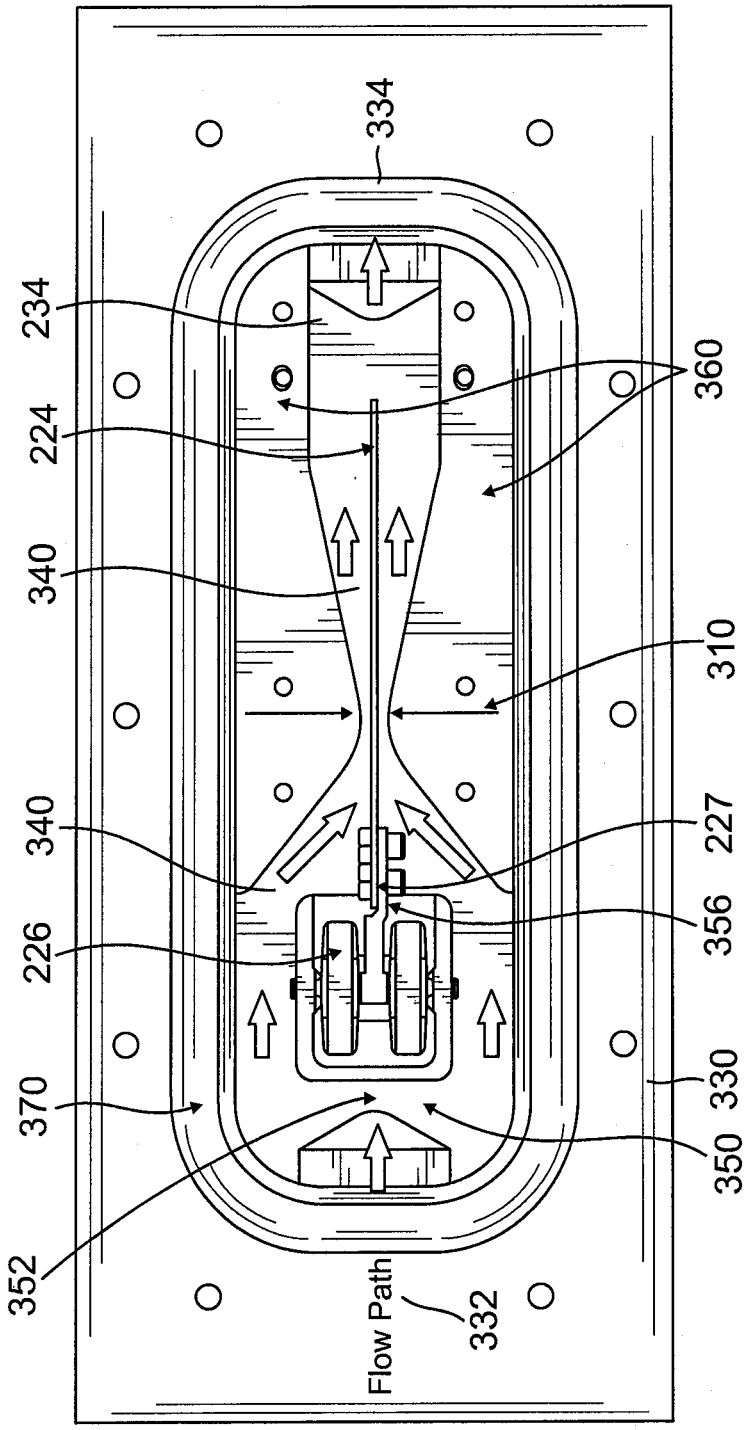
334
234
224
340
340
226
370
352
Flow Path
332
360
310
227
356
330
350

FIG. 9A

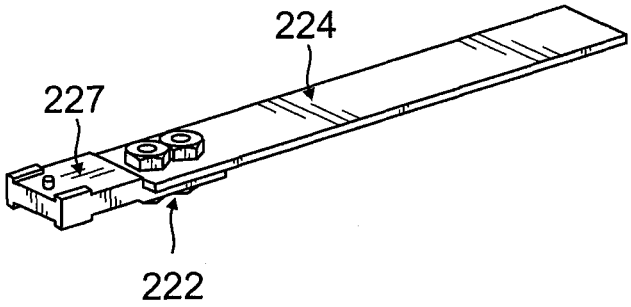

FIG. 9B

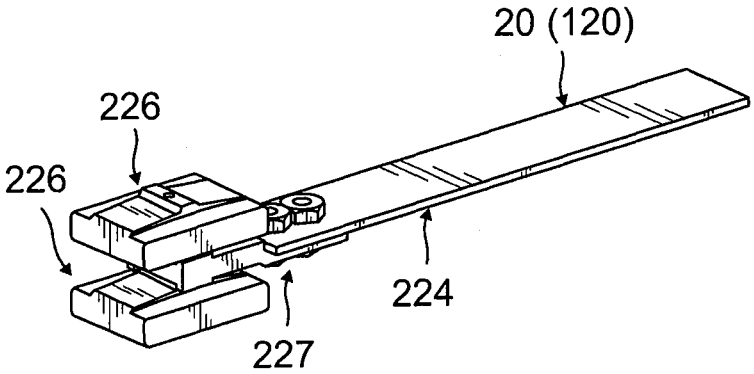

FIG. 9C

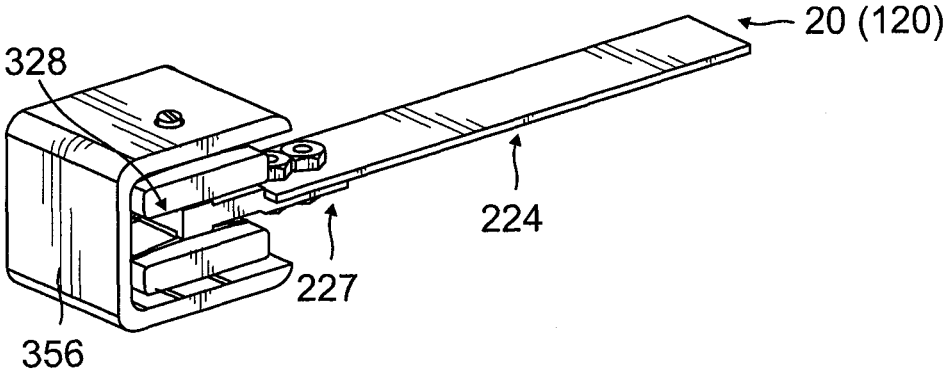

FIG. 9D

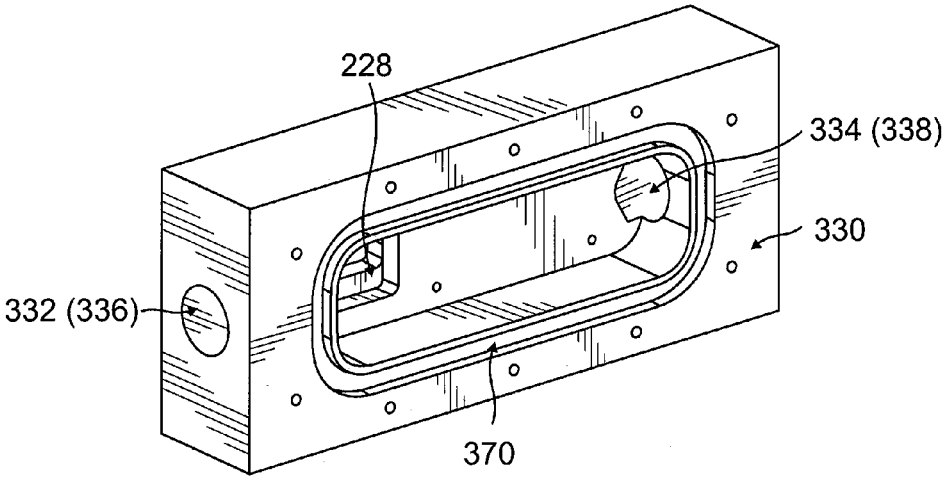

FIG. 9E

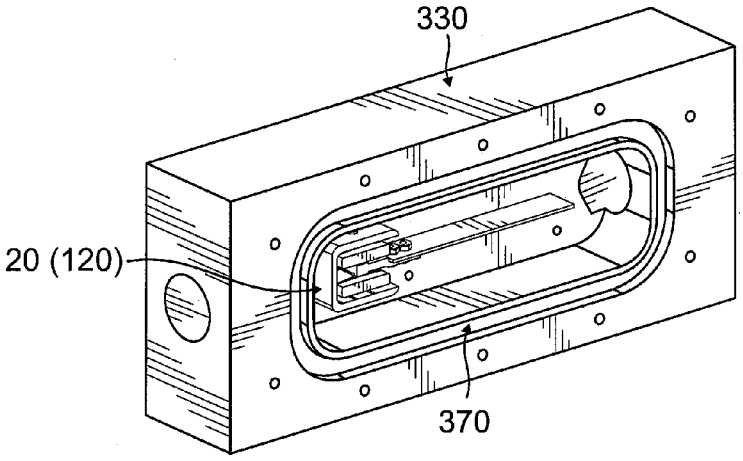

FIG. 9F

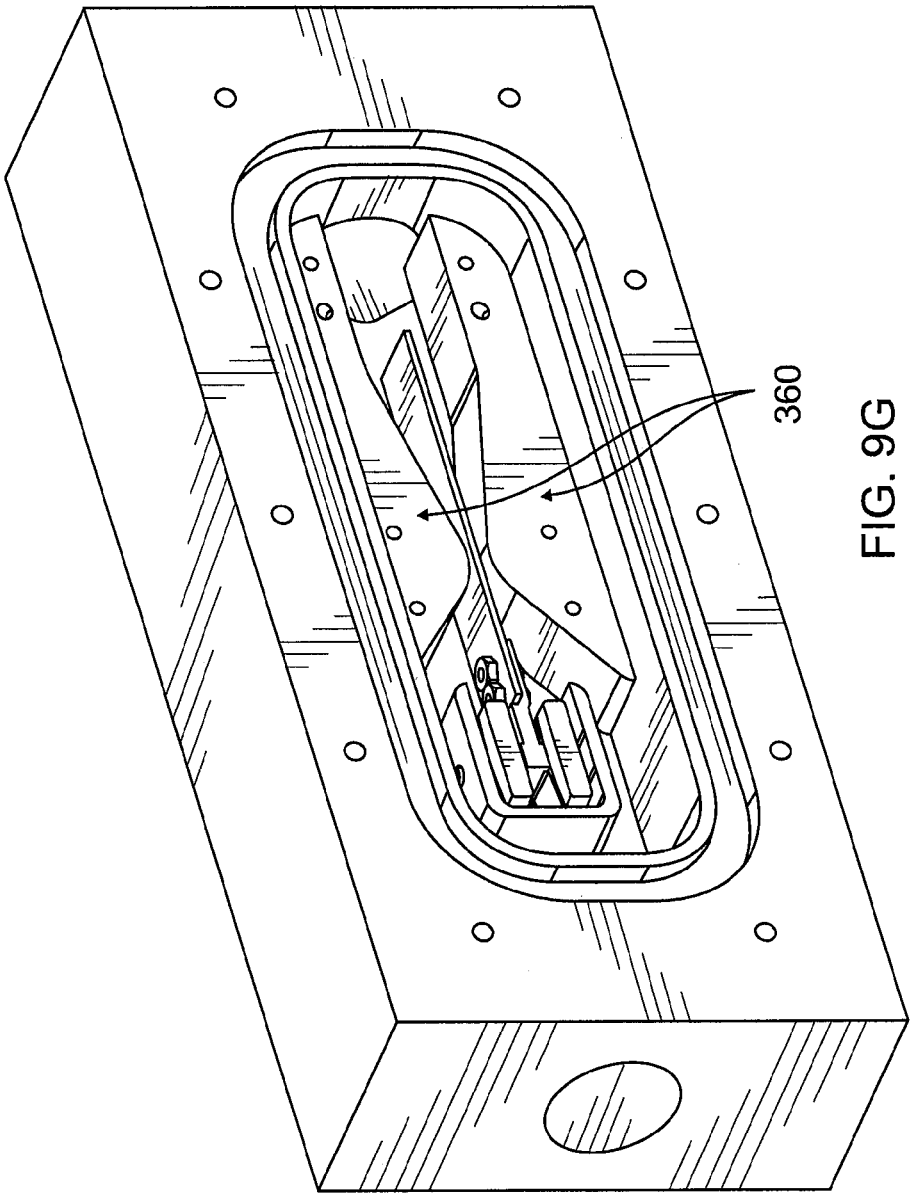

FIG. 9G

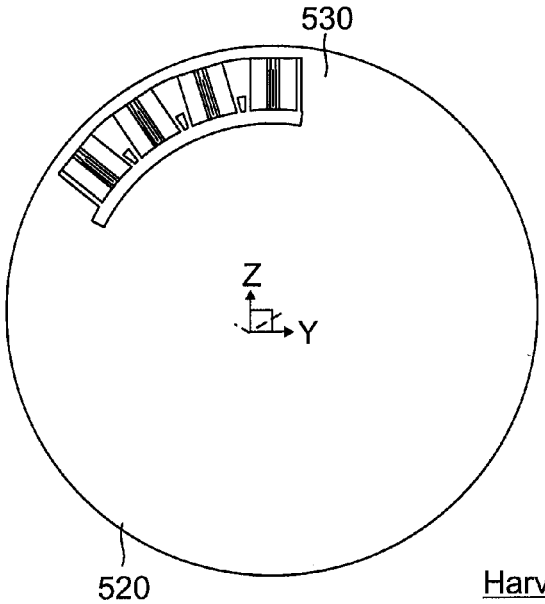

FIG. 10A

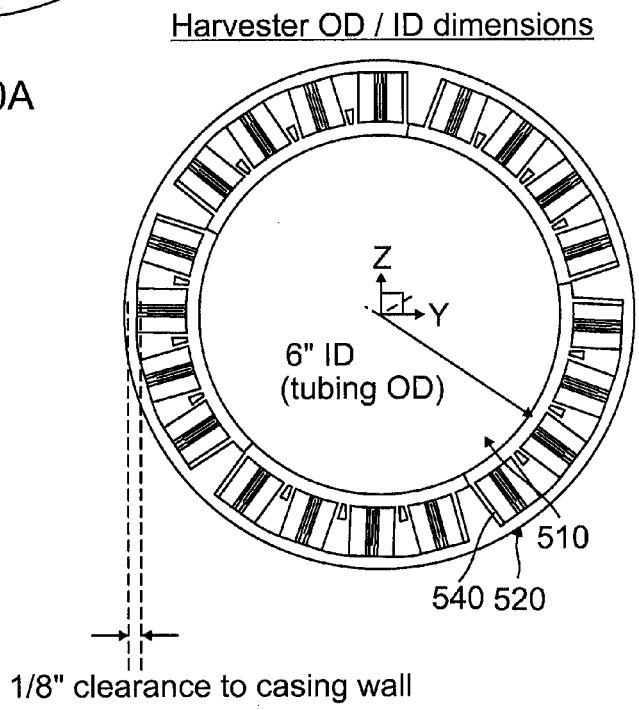

FIG. 10B

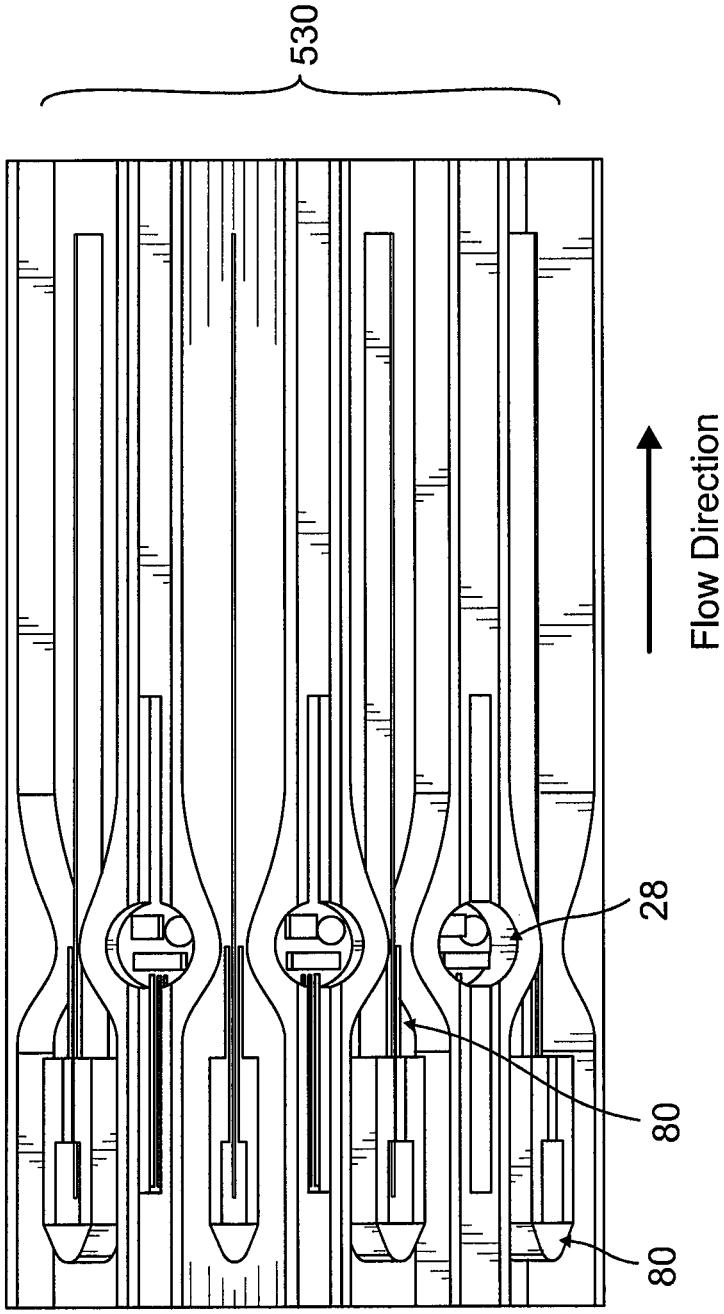

FIG. 10C

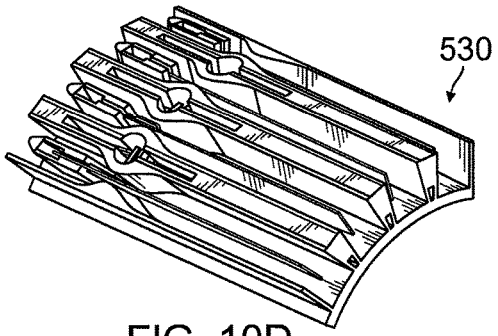

FIG. 10D

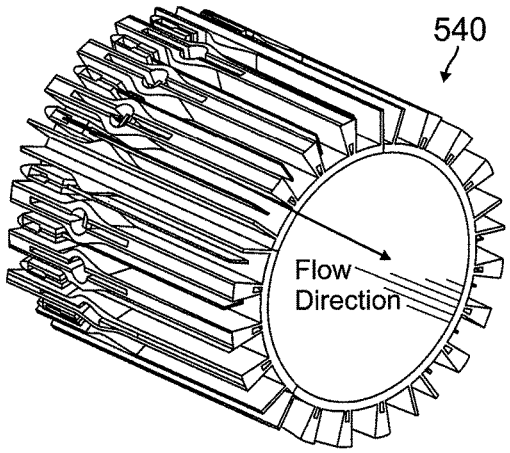

FIG. 10E

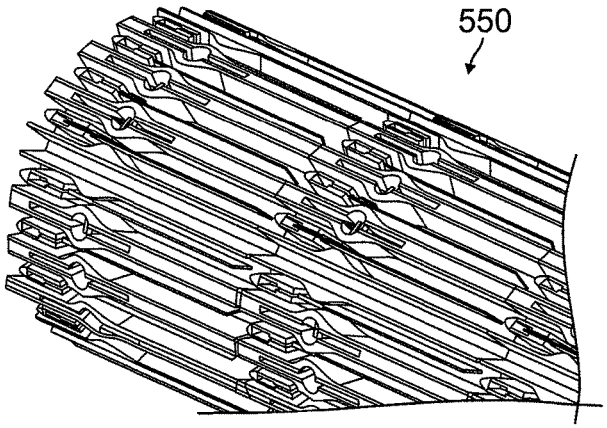

FIG. 10F

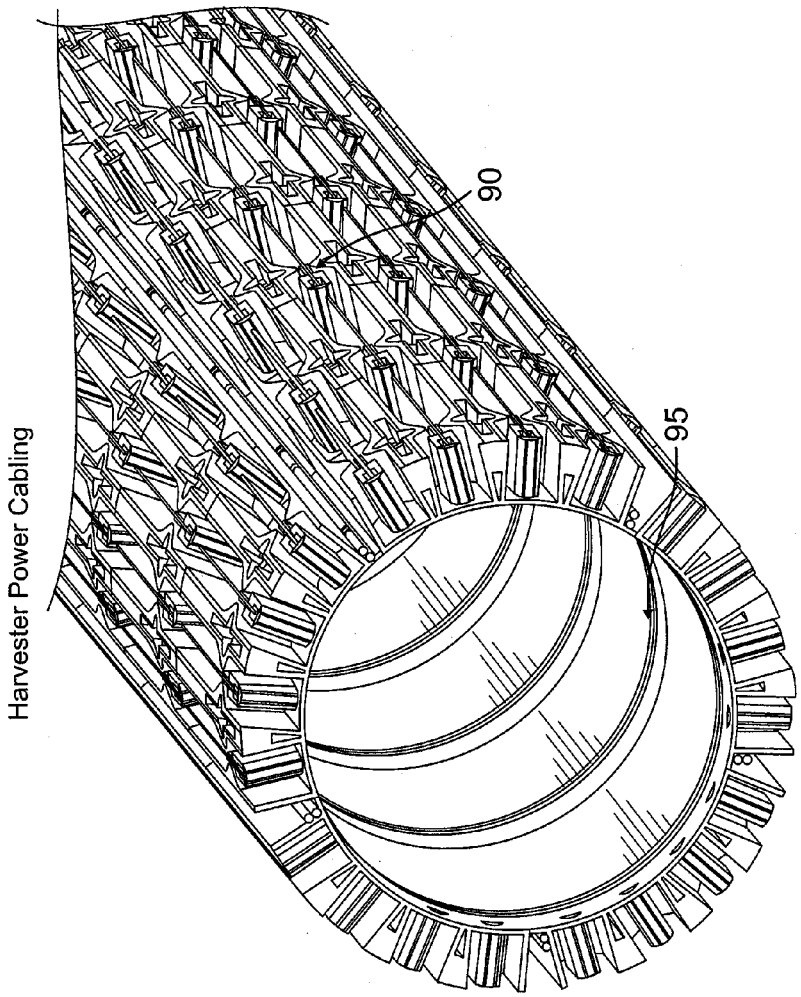

FIG. 10G

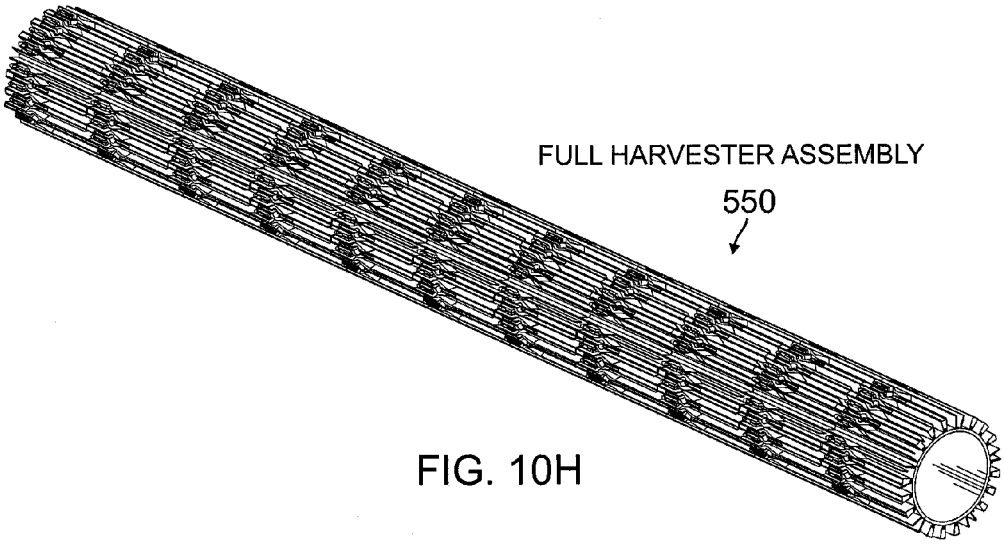

FIG. 10H

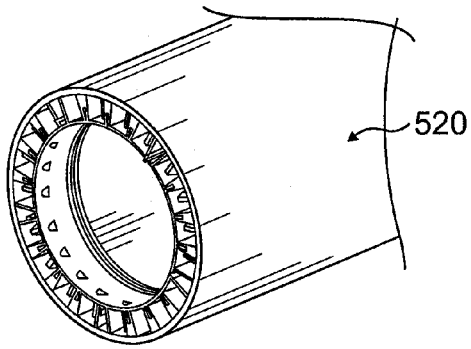

FIG. 10J

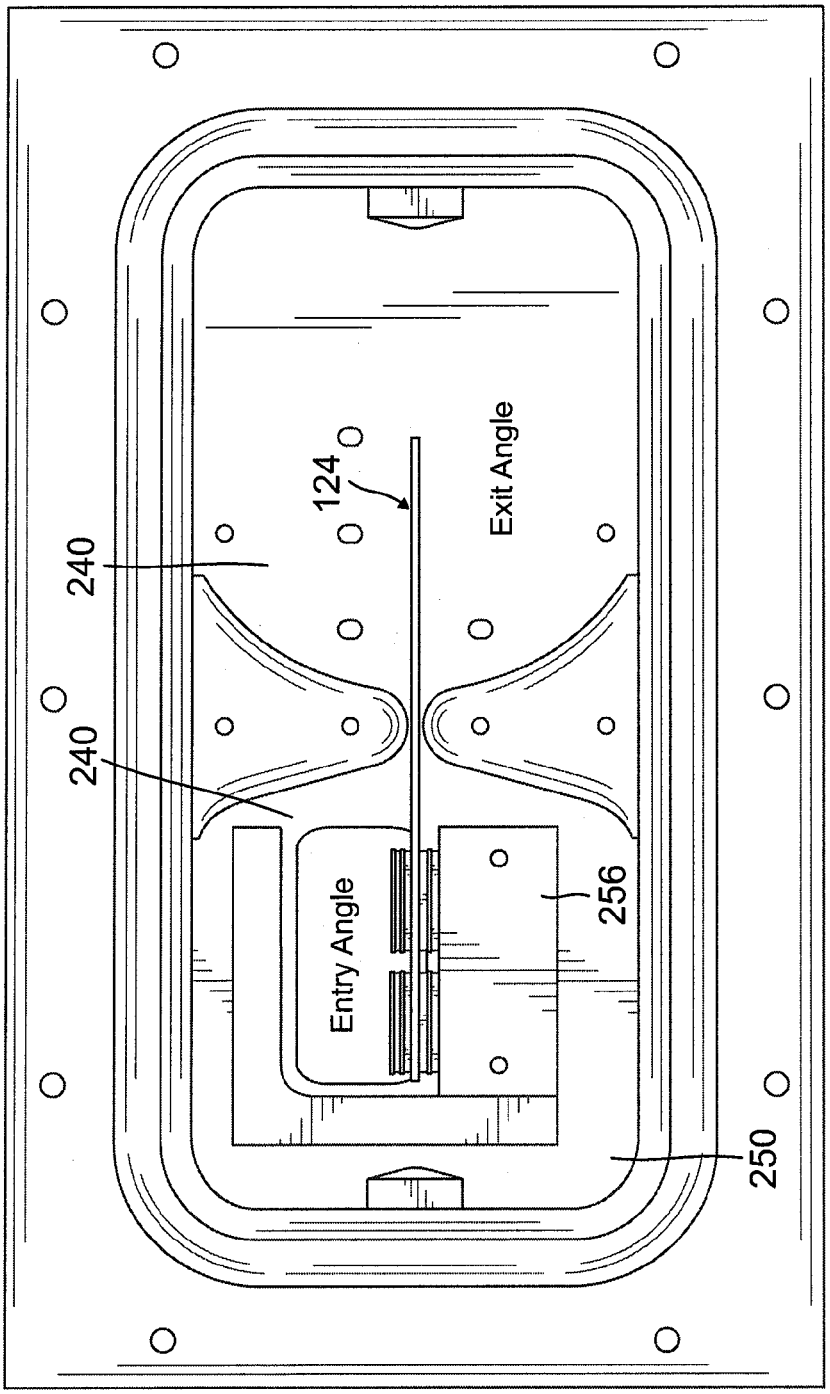

FIG. 11

DIMENSIONS, PARAMETERS, FLOW DATA, AND RANGES FOR EMBODIMENTS OF THE FLOW ENERGY HARVESTER

BIMORPH ACTUATOR	LENGTH (mm)	WIDTH (mm)	THICKNESS (mm)
Actuator 1	49	1.8	0.6
Actuator 2	54	6.4	1.8
Actuator 3	84.1	16.8	0.8
Actuator Min	10	1	0.2
Actuator Max	300	75	6

SPLINE NOZZLE	MIN	MAX
Length of Inlet (mm)	5	150
Cross-Sectional Area of Inlet or Outlet (mm^2)	5	1000
Approximate Entry Angle into Throat Constriction (Degrees)	20	180
Approximate Exit Angle into Throat Constriction (Degrees)	5	90
Cross sectional Area of Throat Constriction (mm^2)	2	30
Length of Outlet (mm)	10	300

FLOW RATES & DATA	Min	Max	Example 1 - Min	Example 1 - Max
Volumetric Flow Rate (LPM)	0.25	30	1	14
Flow Velocities at Throat Constriction (m/s)	0.5	60	2	22
Pressure Drop Across Single Energy Harvester (PSI)	0	500	0	100
Frequency of Actuator Vibration (Hz)	50	1000	--	--
Number of Devices to Be Arrayed in System Design (within a pipe with a 1m section)	25	200	--	--

FIG. 12

FLOW ENERGY PIEZOELECTRIC BIMORPH NOZZLE HARVESTER

CROSS-REFERENCE TO RELATED APPLICATION

This application claims priority to and the benefit of U.S. Provisional Application No. 61/815,647, filed with the U.S. Patent and Trademark Office on Apr. 24, 2013, the entire content of which is incorporated herein by reference.

STATEMENT REGARDING FEDERALLY SPONSORED RESEARCH OR DEVELOPMENT

The invention described herein was made in the performance of work under a National Aeronautics and Space Administration (NASA) contract, and is subject to the provisions of Public Law 96-517 (35 U.S.C. §202) in which the Contractor has elected to retain title.

BACKGROUND

1. Field

Aspects of the present invention relate generally to energy harvesting, and more specifically, to a flow energy piezoelectric bimorph nozzle harvester.

2. Description of the Related Art

Operation of electronics, sensors, or actuators down hole in oil producing wells, or other deep well operations, is difficult, expensive, and generally requires power to be transmitted down hole in a production zone. Transmitting generated power down hole is further complicated by difficulty in transmitting the power to flow past production packers. While in the alternative, power may instead be generated down hole in lieu of being transmitted, with use of rotating turbo-machinery, this type of power generation device is subject to erosion or a short life-cycle. Thus, the operating and replacement costs of existing down hole power generation devices make them difficult, complex, and expensive to operate and maintain.

SUMMARY

Aspects of the present invention relate generally to energy harvesting, and more specifically, to a flow energy harvesting apparatus integrated along a pipe or pipe sleeve or casing and utilizing a vibrating piezoelectric element or structure in such a way as to locally create energy produced from the flow for harvesting, for example, for use down hole in a deep well operation. Power can be produced locally using the flow energy harvesting device according to aspects of the present invention, thus eliminating the need to transmit power down hole to power sensors and actuators and, thus, reducing the overall complexity and difficulty of bringing power down hole.

According to an embodiment of the present, a flow energy harvesting device having a harvester pipe including a flow inlet that receives flow from a primary pipe, a flow outlet that returns the flow into the primary pipe, and a flow diverter within the harvester pipe having an inlet section coupled to the flow inlet, a flow constriction section coupled to the inlet section and positioned at a midpoint of the harvester pipe and having a spline shape with a substantially reduced opening size at a constriction point along the spline shape, and an outlet section coupled to the constriction section. The harvester pipe may further include a piezoelectric structure extending from the inlet section through the

constriction section and point such that the fluid flow past the constriction point results in oscillatory pressure amplitude inducing vibrations in the piezoelectric structure sufficient to cause a direct piezoelectric effect and to generate electrical power for harvesting.

According to an embodiment of the present invention, a flow energy harvesting device configured to be integrated with a fluid flow path of a primary pipe includes a harvester pipe with a flow inlet that receives flow from the primary pipe at one end and a flow outlet at a different part of the harvester pipe that returns the flow into the primary pipe, and a flow diverter fitted within the harvester pipe and coupled to the flow inlet and the flow outlet, the flow diverter being configured to redirect the fluid flow from the main pipe through the harvester pipe. The flow diverter may include an inlet section coupled to the flow inlet at a first end, a flow constriction section coupled to the inlet section and positioned at a midpoint of the harvester pipe, the flow constriction section having a spline shape with a substantially reduced flow opening size at a constriction point along the spline shape and configured to create oscillatory pressure amplitude resulting from the reduced flow opening within the harvester pipe, and an outlet section coupled to the constriction section at a first end and coupled to the flow outlet at an opposite second end, the outlet section having an opening matching a widest section of the spline shape at the constriction section and configured to allow the fluid flow to exit the harvester pipe through the flow outlet. The harvester pipe may further include a piezoelectric actuator having a cantilever beam having a free end, wherein the free end extends from the inlet section in the direction of fluid flow at least through the constriction section and the constriction point such that the fluid flow past the constriction point from the inlet section induces vibrations in the free end sufficient to cause a direct piezoelectric effect in the piezoelectric actuator and to generate electrical power.

In an embodiment, the piezoelectric actuator is a bimorph.

In an embodiment, the piezoelectric material of the bimorph may be lead zirconate titanate (PZT).

In an embodiment, the flow diverter further includes a flow diverter clamp accommodated within the inlet section and positioned along a centerline of the inlet section spaced from the flow inlet such that fluid entering the harvester pipe is prevented from flowing through the flow diverter clamp and is rerouted around the flow diverter clamp in the inlet section. The piezoelectric actuator may further include an electrical connection component accommodated within the flow diverter clamp such that fluid flow is diverted around it, the electrical connection component being coupled to the cantilever beam at an end opposite to the free end such that the electrical power generated by the vibrations in the beam at the free end are transferred to and stored on an external power storage device through the electrical connection component.

In an embodiment, the piezoelectric actuator is a piezoelectric flextensional actuator having a stack of at least two beams, at least one of which is a flextensional piezoelectric beam, integrated around a cantilever adaptor beam, the cantilever adaptor beam being coupled to the beam having a free end that extends from the inlet section in the direction of fluid flow at least through the constriction section and the constriction point and being configured to undergo and transmit oscillatory vibrations to the piezoelectric flextensional actuator via the cantilever adaptor beam.

In an embodiment, the piezoelectric flextensional actuator may be lead zirconate titanate (PZT).

In an embodiment, the electrical power generated by the vibrations transferred via the cantilever adaptor beam may be further transferred to and stored on an external power storage device electrically connected to the piezoelectric flextensional actuator.

In an embodiment, the spline shape of the flow constriction section may include a spline having a converging opening size which narrows to a minimum in cross-sectional flow area at the constriction point and then diverges to a maximum cross-sectional flow area of the flow constriction section where it is coupled to the outlet section, creating a flow area through the constriction point designed to have flow velocity greater than 5 meters per second (m/s).

In an embodiment, the flow area through the constriction point may be designed to have flow velocity greater than 20 meters per second (m/s).

In an embodiment, the piezoelectric actuator may be a piezoelectric unimorph actuator.

In an embodiment, the harvester pipe may be a planar pipe.

In an embodiment, the harvester pipe may be a circular pipe.

In an embodiment, the flow energy harvesting device may be configured to be integrated with the fluid flow path in an oil well production casing within a circumferential region surrounding an outer diameter of an inner pipe.

In an embodiment, the flow constriction section may include a pair of flow constrictor inserts positioned closer to the end of the harvester pipe at the outlet section, each flow constrictor insert having a cubic or higher order spline shape that is a mirror image of the other such that the pair of flow constrictors creates the flow constriction point at the midpoint of the harvester pipe having the substantially reduced opening size.

According to another embodiment of the present invention, a flow energy harvesting system configured to be integrated with a fluid flow path of a primary pipe includes a primary pipe having an inner diameter and an outer diameter, a casing positioned around the outer diameter of the primary pipe and annularly spaced from the primary pipe, the annular area between the primary pipe and the casing being subject to a fluid flow, and a plurality of flow energy harvesting devices positioned around the outer diameter of the primary pipe between the casing and the primary pipe, the plurality of flow energy harvesting devices having a clearance from the casing. Each flow energy harvesting device of the plurality of flow energy harvesting devices may be connected in series and/or in parallel to adjacent flow energy harvesting devices of the plurality of flow energy harvesting devices such that a power output of the flow energy harvesting system is derived from the plurality of flow energy harvesting devices.

In an embodiment, each flow energy harvesting device of the plurality of flow energy harvesting devices may include a harvester pipe having a flow inlet that receives flow from the annular area around the primary pipe at one end and a flow outlet at a different part of the harvester pipe that returns the flow into the annular area, and a flow diverter fitted within the harvester pipe and coupled to the flow inlet and the flow outlet, the flow diverter being configured to redirect the fluid flow from the main pipe through the harvester pipe and having an inlet section coupled to the flow inlet at a first end, a flow constriction section coupled to a second end of the inlet section and positioned at a midpoint of the harvester pipe, the flow constriction section having a spline shape with a substantially reduced flow opening size at a constriction point along the spline shape and configured to create oscillatory pressure amplitude resulting from the reduced flow opening within the harvester pipe. The flow diverter of each harvester pipe may further include an outlet section coupled to the constriction section at a first end and coupled to the flow outlet at an opposite second end, the outlet section having an opening matching a widest section of the spline shape at the constriction section and configured to allow the fluid flow to exit the harvester pipe through the flow outlet. Each harvester pipe may further include a piezoelectric element having a cantilever beam having a free end, wherein the free end extends from the inlet section in the direction of fluid flow at least through the constriction section and the constriction point such that the fluid flow past the constriction point from the inlet section induces vibrations in the free end sufficient to cause a direct piezoelectric effect in the piezoelectric element and to generate electrical power.

In an embodiment, the piezoelectric element may be a lead zirconate titanate (PZT) bimorph.

In an embodiment, the plurality of flow energy harvesting devices may be positioned around the outer diameter of the primary pipe between the casing and the primary pipe in wedges and sections. Each wedge may include a plurality of flow energy harvesting devices positioned side by side around the outer diameter of the primary pipe and connected in series or in parallel to each adjacent flow energy harvesting device. Each section may include at least two wedges, each including a plurality of flow energy harvesting devices positioned side by side around the outer perimeter of the primary pipe. The flow energy harvesting system may include at least one section, each section being lined up along a length of the primary pipe with the flow energy harvesting devices each aligned and connected with the respective flow energy harvesting device in the adjacent section.

In an embodiment, the primary pipe may have an outer diameter ranging from approximately 2.875 inches to approximately 9 inches and the casing may have an inner diameter ranging from approximately 5.375 inches to approximately 9.5 inches

In an embodiment, each flow energy harvesting device may be less than or equal to 4 inches in length, less than or equal to 1 inch in width, and less than or equal to 1 inch in thickness, and may produce at least 1 milliwatt (mW) of power.

BRIEF DESCRIPTION OF THE DRAWINGS

These and other features and advantages of embodiments of the present invention will become more apparent by reference to the following detailed description when considered in conjunction with the following drawings. In the drawings, like reference numerals are used throughout the figures to reference like features and components. The figures are not necessarily drawn to scale.

FIG. **1** is a schematic diagram illustrating a flow energy harvester according to an embodiment.

FIG. **2** is a schematic diagram of an array of flow energy harvesters positioned in a circumferential or annular region between a well casing and a pipe.

FIGS. **3A-3C** show a series of graphs depicting the elastic, piezoelectric, and electromechanical properties of four different piezoelectric materials as a function of temperature.

FIG. **4** is a power output graph demonstrating the power generation as a function of resistance for an example flow harvester device (FEH#5).

FIG. **5** is a power output graph demonstrating the power generation as a function of resistance for a second example flow harvester device (FEH 05) measured at various flow rates.

FIG. **6** is a schematic diagram illustrating a planar flow energy harvester according to an embodiment.

FIG. **7** is a power output graph demonstrating the power and voltage generation as a function of resistance and flow rate for a third example flow harvester device.

FIGS. **8**A-**8**G are schematic diagrams illustrating a flow energy harvesting device having a spline flow constriction section and an in-flow piezoelectric bimorph actuator, and the various components of the flow energy harvesting device, according to an embodiment.

FIGS. **9**A-**9**G are schematic diagrams illustrating a flow energy harvesting device having a spline flow constriction section and a pair of piezoelectric flextensional actuators out of flow coupled to a non-piezoelectric cantilever beam extending in-flow, and the various components of the flow energy harvesting device, according to another embodiment.

FIGS. **10**A-**10**H and **10**J are schematic diagrams illustrating a flow energy harvesting system including an array of flow energy harvesting devices integrated within an annular fluid flow path of a primary pipe, and the various components of the flow energy harvesting system, according to an embodiment.

FIG. **11** is a schematic diagram illustrating a flow energy harvester having a spline flow constriction section and a piezoelectric bimorph actuator according to an embodiment including an Entry Angle and an Exit Angle for reference in conjunction with FIG. **12**.

FIG. **12** is a chart including dimensions for the flow energy harvesting device having the spline flow constriction section and piezoelectric bimorph actuator according to the embodiment illustrated in FIG. **11**.

DETAILED DESCRIPTION

The detailed description set forth below in connection with the accompanying drawings is intended as a description of embodiments of a flow energy harvesting device, as provided in accordance with the present invention, and is not intended to represent the only forms in which the present invention may be constructed or utilized. The description sets forth the features of the present invention in connection with the illustrated embodiments. It is to be understood, however, that the same or equivalent functions and structures may be accomplished by different embodiments that are also intended to be encompassed within the spirit and scope of the invention. As denoted elsewhere herein, like reference numbers are intended to indicate like elements or features. Moreover, the sizes of the layers and regions in the drawings may be exaggerated for convenience of explanation.

Embodiments of the present invention, as shown in FIG. **1**, for example, are directed toward the use of nozzles and/or flow cavities or constrictors **40** (hereinafter referred to interchangeably as "nozzle(s)," "flow cavities," "constrictor(s)," and/or "constriction section(s)," **40**) along a pipe **510** or pipe sleeve or casing **520** to produce flow conditions that excite a vibrating piezoelectric element or structure **20** in such a way as to enable conversion of energy produced from the flow into useable or storable electrical power for local use, for example, down hole in a deep well operation. In order to enable this energy conversion, in these embodiments, the frequency content of the unsteady flow must be manipulated to match the resonant frequency of the vibrating or piezoelectric structure **20** in a closely coupled fluid-structure interaction design. In these embodiments, the use of a piezoelectric element or structure **20**, unlike other forms of power producing structures, may result in an energy producing mechanism capable of operating for very long periods of time, for example, decades.

Accordingly, a flow energy harvester **100** (hereinafter referred to interchangeably as "flow energy harvester," "flow energy harvesting device(s)," and/or "FEH," **100**), according to embodiments of the present invention, may overcome a principle limitation of existing technology, for example, rotating turbo-machinery power generators, which are subject to erosion or shorter life-cycles. Moreover, the use of piezoelectric elements **20**, according to embodiments of the present invention, also allows for use of higher temperature materials (i.e., up to 250° C.) in production of the flow energy harvester devices **100**. The piezoelectric elements or actuators **20** (hereinafter used interchangeably with "piezoelectric structure" and/or "piezoelectric element" **20**), according to these embodiments, may be in the form of a bimorph **120**, a unimorph, a thunder actuator, a flextensional actuator **220**, a moonie actuator, etc.

In an embodiment, a flow nozzle and/or flow cavity **40** is placed within a flow energy harvester pipe **30** as a means of generating vibrations over a predetermined frequency band. The flow energy harvester pipe **30**, according to this embodiment, also includes a piezoelectric element or structure **20** extending from a position within the harvester pipe upstream from the flow nozzle and/or flow cavity **40** through the flow nozzle **40**, and the combination results in a vibrating piezoelectric element or structure **20** that can locally generate power. Thus, sufficient power can be produced locally, using the flow energy harvester **100** according to embodiments of the present invention, such that the need to transmit power down hole to power sensors and actuators in deep well operations, for example, may be eliminated.

The flow energy harvester **100**, according to an embodiment of the present invention, integrates flow nozzles or constrictors **40** specifically designed to excite piezoelectric elements or structures **20**, for example, bimorph actuators **120**, over a limited frequency band to induce a direct piezoelectric effect of the piezoelectric materials of each actuator **20** at is natural resonant frequency. The alternating current (AC) pressure and displacements resulting from the direct piezoelectric effect may then be converted to useable or storable AC electricity. The fluid flow through the flow nozzle or constrictor **40**, in these embodiments, induces vibrations imposing mechanical stresses or strains on the piezoelectric element or structure **20**, which results in the generation of electrical power.

Referring to the embodiment illustrated in FIG. **1**, the flow energy harvesting device **100** may include a harvesting pipe **30** having a nozzle or flow constriction section **40** where a fluid flow entering the flow energy harvesting device from a flow inlet experiences a reduced cross-sectional harvester pipe area through which it can pass. The flow constriction section **40**, in this embodiment, may further include a flow constriction point or throat **10** (hereinafter used interchangeably) where a necking effect along a circumference or perimeter of the harvester pipe **30** is reduced down to its smallest cross-sectional area. In the embodiment shown in FIG. **1**, the flow constriction point **10** is at a middle or midpoint of the harvester pipe **30**. The piezoelectric actuator **20**, for example a bimorph actuator

120 shown in the embodiment of FIG. 1, is positioned to extend through the flow constriction point 10 and section 40 such that the piezoelectric actuator 20 experiences an oscillatory pressure amplitude or stress resulting from the disruption in pressure flow and frequency passing through the constriction point 10 and through the harvester pipe 30, causing the piezoelectric actuator 20 to vibrate and undergo a direct piezoelectric effect to produce an energy field at its natural resonant frequency in the liquid. More specifically, as a piezoelectric actuator 20 is excited due to an oscillatory pressure or stress (T) vibrating the piezoelectric structure 20 at its natural resonant frequency, an alternating electricity or an electrical field (E) is produced via the direct piezoelectric effect, where E=g*T or E=d*(T/∈), and d is the piezoelectric charge, g is the voltage coefficient, and ∈ is the dielectric permittivity. The electricity or electrical field E that is generated may then be conditioned and stored, for example, in a battery, a supercapacitor, or via delivery to a power conditioning circuitry device, for example, a rectifier circuit or a capacitance device, and then to a DC to DC amplifier, etc.

The natural frequency of the piezoelectric element or structure 20 in a fluid, according to embodiments of the present invention, can be calculated from impedance measurements as a function of frequency. In order to calculate the approximate resonant frequencies to properly scale and design the flow nozzle or constrictor 40, equations governing piezoelectric actuators 20 and non-dimensional analysis using the Buckingham Pi Theory can be used as a guide. The scale and design of the flow nozzle or constrictor 40 can be more precisely honed or tuned using Computational Fluid Dynamics (CFD) simulations, in certain instances.

With continued reference to FIG. 1 and with reference to the embodiment illustrated in FIG. 2, a piezoelectric actuator 20 or an FEH device 100 having a piezoelectric actuator 20 element may be positioned within and integrated with a fluid flow through a circumferential or annular region around an oil or other deep well or pipe 510 within a production sleeve or casing 520. In the embodiment illustrated in FIG. 2, an array of piezoelectric actuators 20, for example, bimorph actuators 120 or unimorph actuators, may be positioned in the circumferential or annular region around an oil or other deep well or pipe 510 within the production sleeve or casing 520, either on an outer diameter of the well or pipe 510 or on an inner diameter of the sleeve or casing 520, creating flow constriction sections 540 affecting the fluid flow through the sleeve 520. The fluid flow through the flow constriction sections 540 past these piezoelectric actuators 20 creates an oscillatory motion at a frequency determined and controlled by a length, mass, and stiffness of the piezoelectric actuators 520 as well as the density, viscosity, and velocity of the fluid and flow. The oscillatory motion, according to this embodiment, produces an electric field via the direct piezoelectric effect as each of these piezoelectric actuators 20 is excited by the oscillatory vibrations, and the resulting locally generated electricity may be transferred to a storage device, for example a battery, a supercapacitor, a power conditioning circuitry device such a rectifier circuit or a capacitance device, a DC to DC amplifier, etc., or the generated electricity may be immediately used to perform various functions, for example, to open and shut valves in the production zone of the deep well operation, or to provide the power to perform other tasks down hole.

With continued reference to FIGS. 1 and 2, the conditions in the production zone of an oil well or other deep well or pipe 510 are generally extreme. For example, the static pressure in the production zone of an oil well can be greater than 25,000 pounds-square-inch (psi) and temperature can reach 160° C. or higher. Moreover, the oil produced in these oil wells or pipes 510 can contain an abrasive fine grit and can flow as fast as 50 feet per second (ft/s) or 15 meters/second (m/s). The mechanical power in the fluid flow associated with this high flow rate of 50 ft/s or 15 m/s can be calculated using the following equation:

$$P_f = \frac{dE}{dt} = \frac{1}{2}\rho v^3 A = \frac{1}{2A}\rho Q^3,$$

where E is the kinetic energy, t is the time, p is the density, A is the cross sectional area of the pipe, v is the fluid velocity, and Q is the flow rate (where Q=v*A). In an embodiment according to the present invention, ignoring any fluid compression effects, oil, having a flow rate of 15 m/s, a density of 900 kilograms per cubic meter (kg/m^3) in a 4 inch diameter pipe, may generate mechanical power P equal to 12.5 kilowatts (kW) of power flowing across the cross sectional area of the pipe. Since the mechanical power P is proportional to the cube of the velocity, 3% of the mechanical power can be extracted with only a reduction of 1% in the velocity, according to an embodiment. Accordingly, extracting useful mechanical power on the order of 10 Watts, for example, may be accomplished, without noticeably impeding the flow rate or velocity of the oil, according to this embodiment.

In embodiments of the present invention, design of the flow energy harvesting device 100 is also dependent on the desired electrical power output of the piezoelectric actuator. Electrical power of the piezoelectric actuator 20, according to some embodiments, can be calculated using the following formula: $P_{ev}=(1/4)k^2\eta\rho v^3A$, where k is electromechanical coupling of the vibrating mode of the piezoelectric, η is the conversion efficiency of the power in the fluid flow to power in the vibrating structure, ρ is the density, A is the cross sectional area of the pipe, and v is the fluid velocity of the fluid flow. In these embodiments, power P_f flowing through the pipe with the cross-sectional area A can be calculated using the formula $P_f=(1/2)\rho v^3A$, and power in the vibrating structure P_v can be calculated using the formula $P_v=(1/2)\eta\rho v^3A$, where electrical power P_{ev} in the piezoelectric actuator 20 is equal to k^2P_v, or $P_{ev}=(1/2)k^2\eta\rho v^3A$, except where an impedance of load Z_1 is set to equal an impedance load of the piezoelectric actuator Z_p such that the delivered power P_{ed} is equal to $(1/2)P_{ev}$, arriving at the formula for calculating the electrical power output of the piezoelectric actuator, $P_{ev}=(1/4)k^2\eta\rho v^3A$.

Mechanical power or energy can be converted into electrical energy through various transduction mechanisms, such as piezoelectric, electromagnetic, and/or electrostatic mechanisms. Piezoelectric mechanisms have been the mainstay for energy harvesting systems due to their high electromechanical coupling and solid state nature (i.e., no bearings or bushings required). Energy conversion efficiency from mechanical into electrical energy or vice versa may be defined by the square of the electromechanical coupling factor k. The electromechanical coupling factor k may serve as an indicator of the effectiveness with which the piezoelectric material is converting mechanical into electrical energy or electrical into mechanical energy. The electromechanical coupling factor k is often denoted with two subscripts, where the first subscript refers to the direction along which electrodes are applied, and the second subscript refers to the direction along which mechanical energy is applied or

created. Due to a high anisotropy in piezoelectric properties, piezoelectric transducers or actuators **20** have different values for the electromechanical coupling factor k depending on the mode of vibration. Accordingly, optimum transducer or actuator **20** design is vital for converting the mechanical energy U_m, to a maximal electrical energy U_E, where $U_E=k^2U_m$. In an embodiment, for example as shown in FIG. **1**, where the piezoelectric actuator **20** is a bimorph **20**, the electromechanical coupling factor is a k_{31} coupling device, the electrical power generated may be increased, nonetheless, by designing, for example, additional extensional k_{33} mode or shear k_{15} mode transducers.

With reference now to TABLET below, it may be evident that piezoelectric mechanisms can function over a wide temperature range, with a maximum operating temperature determined by a Curie temperature T_C, remaining stable under large hydrostatic pressures. One of the most widely used piezoelectric materials is in the lead zirconate titanate (PZT) family, where PZTs have high piezoelectric properties with high Curie temperatures. For example, Navy type II (PZT5A), shown in TABLE I, has a Curie temperature of 365° C. and has been used successfully under operating temperatures of up to 200° C. Other materials that may be utilized for high temperature piezoelectric mechanisms may include lead titanate, $BiScO_3$—$PbTiO_3$ (BS—PT), bismuth titanate, and/or lithium niobate; however, these materials generally have inferior piezoelectric properties or higher dielectric loss factors (tan δ) as compared with the PZT family of materials, and as is evident from TABLE I. TABLE I demonstrates the room temperature material properties of various high temperature piezoelectric materials.

there does not appear to be any property degradation up to a temperature of 400° C., meaning, a wide variety of high temperature transducers and actuators **20** may be manufactured from these and other materials depicting similar properties.

Thus, as shown in the graphs in FIGS. **3**A-**3**C, a variety of piezoelectric materials may be utilized to manufacture the piezoelectric actuator **20**, according to the embodiments of the present invention. In an embodiment, the piezoelectric actuator **20** is a bimorph actuator **120**. In other embodiments, however, the piezoelectric actuator **20** may be made of any of a variety of piezoelectric materials that can be used in temperatures up to 160° C., and, as illustrated in FIGS. **3**A-**3**C, these piezoelectric materials can remain functionally operational under high temperature conditions reaching up to 400° C. With reference back to the embodiment shown in FIG. **1**, the piezoelectric actuator **20** may include a cantilever beam system **122** including a cantilever beam **124** having two piezoelectric layers **126** (i.e., a bimorph **120**), as shown in the embodiment in FIG. **8**B, for example. The piezoelectric bimorph **120**, according to this embodiment, has a low resonant frequency such that the cantilever system **122** is more likely to match the natural frequency content of the unsteady flow created by the flow-through nozzle or cavity **40** geometry. The piezoelectric bimorph **120**, according to this embodiment, also offers large amplitude of vibration for a given oscillatory force, (i.e., fluid flow), increasing the mechanical power stored in the piezoelectric bimorph **120** cantilever system **122**. The piezoelectric bimorph **120** cantilever beam **124** has a tendency to vibrate at its natural frequency in the fluid. And, as the fluid flow

	T_c/T_m (° C.)	Structure	Dielectric properties	Electromechanical coupling factors	Piezoelectric coefficients (pC/N)	Physical properties
PZT5A	365	Perovskite	K_{33}^T~1700, tanδ~2%	k_t~0.49, k_{31}~−0.34, k_{33}~0.71	d_{33}~370, d_{15}~584	ρ = 7.9 g/cc, s_{33}^E = 18.8 pm^2/N, Q_m = 75
Lead titanate	400	Perovskite	K_{33}^T~210, tanδ~1.4%	k_t~0.4, k_{31}~0.05, k_{33}~0.40	d_{33}~50, d_{15}~40	s_{33}^E~7 pm^2/N, Q_m > 500
$BiScO_3$— $PbTiO_3$ (BS-PT)	450	Perovskite	K_{33}^T~2010, tanδ~5%	k_t~0.49, k_{31}~−0.22, k_{33}~0.69	d_{33}~401, d_{15}~520	ρ = 7.9 g/cc, Q_m = 50
Bismuth titanate	650	Bismuth layer	K_{33}^T~120, tanδ~0.4%	k_t~0.2, k_{31}~0.02, k_{33}~0.09	d_{33}~18, d_{15}~16	ρ = 6.55 g/cc, s_{33}^E~44 pm^2/N, Q_m > 600
$LiNbO_3$	1150	Corundum	K_{33}^T~25, tanδ~0.5%	k_t~0.17 (z cut), 0.49 (y/36° cut)	d_{31} = −1, d_{33} = 6, d_{15} = 68, d_{22} = 21	ρ = 4.65 g/cc, Q_m = 10,000

While the flow energy harvesting device **100** has been described in the embodiments above, with reference to FIG. **2**, for example, for extracting energy down hole in an oil well production zone, aspects of the present invention are directed toward extracting energy in any system where the flow of oil or gas, or any fluid, is substantial, including these oil and gas pipelines. In these embodiments of the FEH **100** utilized to extract energy in any system having a substantial fluid flow, the generated energy can be used for a variety of applications, for example to power sensors, lower powered electronics, or to generate anticorrosion currents.

With reference now to FIGS. **3**A-**3**C, various properties of the piezoelectric materials, for example, the elastic, piezoelectric, and electromechanical properties, are temperature dependent. FIGS. **3**A-**3**C, depict these temperature dependent properties for various high temperature piezoelectric materials, for example Pz46 and B8613 bismuth titanate based materials, and BMT-PT bismuth magnesium titanate-lead titanate materials, with a piezoelectric stress constant e_{33}. In these examples, due to their high Curie temperatures,

velocity ν increases, the maximum velocity ν_t at the constriction point or the throat **10** ($\nu_t=\omega*S$) must also increase to keep up with the increased flow velocity ν. In order for the maximum velocity ν_t at the constriction point **10** to increase while still maintaining the frequency $\omega=2*\pi*f$, tip displacement S of the cantilever beam **124** must increase. Accordingly, in these embodiments, the tip displacement S increases with increasing fluid flow velocity ν until the tip displacement S can no longer be displaced, at which point the frequency ω of the piezoelectric bimorph **120** cantilever **124** jumps to it second mode.

In an example, the results of which are depicted in the power as a function of load impedance graph illustrated in FIG. **4**, a piezoelectric bimorph **120** was connected in parallel and used to demonstrate the power generation in a proof-of-concept nozzle or flow constrictor **40** flow harvesting device **100** (FEH#5), with a design based off the embodiment shown in FIG. **1**, having a resonant frequency approximately equal to 110 Hertz (Hz), and capacitance equal to 25 nanofarads (nF). In this example, the piezoelec-

tric bimorph **120** with the design based off the embodiment shown in FIG. **1**, has a length of approximately 42 millimeters (mm), a width of approximately 2.5 mm, and a thickness of approximately 0.6 mm. In this embodiment, in order to achieve maximum power transfer from the source to the load, the load resistance R_L should be matched to the source impedance (i.e., a piezoelectric mechanism). The electrical impedance of a piezoelectric material at off-resonance frequencies can be approximated using the formula $1/j\omega C+R_p$, where R_p is the internal resistance related to the dielectric loss (i.e., tan $\delta/\omega C$, tan δ=2%), and C is the capacitance of the piezoelectric material. The nozzle or flow constrictor **40**, according to the embodiment shown in FIG. **1**, produced an average power of approximately 0.53 milliwatt (mW)·per FEH **100** having a piezoelectric bimorph **120**, measured at a flow rate of 12 liters per minute (LPM), which was the maximum possible flow rate available for the testing apparatus use. The power generated as a function of the load resistance for the piezoelectric bimorph **120** flow constrictor **40** FEH **100**, according to the embodiment shown in FIG. **1**, can be found in FIG. **4**, where the maximum power was achieved when the load resistance approximated 50 kiloohms (kOhm), which is close to the value of electrical impedance estimated using the formula $1/j\omega C+R_p$, or 57.8 kOhm. As illustrated in the graph in FIG. **4**, maximum power of 0.53 mW was achieved at a resistance of approximately 50 KOhms, above which, power steadily decreased as load resistance increased.

In additional examples, a variety of different nozzle or flow constrictor **40** designs were tested, based on simple flow channels. As compared with the flow nozzle or constrictor **40** shown in FIG. **1** (FEH#5), FEH#5 had power levels an order of magnitude higher than all the other simple direct flow nozzles or flow constrictors. The power generated by each of the FEH#5 type harvesting devices **100** having a flow constriction point **10** near a midpoint of the harvester pipe **30** is greater, by an order of magnitude, than any power generated by similar devices having a piezoelectric bimorph configuration. Accordingly, in order to confirm the design and results achieved from testing the FEH#5 (shown in FIG. **4**), a second nozzle or flow constrictor FEH 05 was fabricated, based on the same flow channel and design as the FEH#5, and tested. FIG. **5** illustrates a graph depicting power as a function of load resistance and flow rate for the duplicate FEH#5 (FEH 05) fabricated and tested. In this example, the duplicate FEH#5 has a piezoelectric bimorph **120** with the design based off the embodiment shown in FIG. **1** with a length of approximately 42 mm, a width of approximately 2.5 mm, and a thickness of approximately 0.6 mm. FIG. **5** depicts the power curves as a function of flow rate in LPM and in the forward F and reverse R directions. The data for this example was taken from a flow from a tap with fluid exiting the device at ambient pressure. As shown in the graph of FIG. **5**, the power levels reached approximately the same levels as the original FEH#5 prototype and design shown in FIG. **1**. In this example and in the example shown in FIG. **4**, the maximum velocity ν for the FEH#5 and the FEH 05 was approximately 21 m/s at a maximum volumetric flow rate of approximately 14 LPM. In an embodiment, the fluid flow was subject to a high pressure loop of 250 psi which resulted in a power generation of up to 2.5 mW, at which the FEH **100** became unstable and the piezoelectric bimorph **120** showed signs of degradation.

With continued reference to FIG. **5**, each of the curves depicted in the graph provides a range of velocities ν for the FEH 05 device. For example, 12 LPM corresponds to a velocity ν of 21 m/s. In the example shown in FIG. **5**, the lowest flow rate in the forward F direction to produce measurable power output results was 1.4 LPM which corresponds to a velocity ν of approximately 2.45 m/s (where ν=(21 m/s at 12 LPM)*(1.4 LPM/12 LPM)). In these examples, the velocity in the flow constriction section **40** and the flow rate are directly linearly related through the flow area of the constriction point **10** such that as the flow rate increases so does the velocity, generating higher average power, as shown in FIG. **5**. In embodiments of the present invention, the flow energy harvesting devices **100** can be manufacture much smaller to operate on a micro-scale such that the frequencies and vibration of the piezoelectric actuator **20** increases to a greater degree. More specifically, in other embodiments, as the substantially scaled down (micro) piezoelectric actuator **20** of the micro-FEH system is excited due to an oscillatory pressure or stress vibrating the substantially scaled down (micro) piezoelectric structure **20** at its natural resonant frequency, a much greater relative alternating electricity or an electrical field (E) can be produced via the direct piezoelectric effect on these micro-FEH systems.

Moreover, in an additional example for purposes of comparison, a planar version of the FEH#5 flow energy harvesting device **110** having a piezoelectric bimorph **120** extending through a nozzle **41** and flow constriction point **11**, was manufactured, having a point of constriction **11** at a midpoint of the pipe **31**, as shown schematically in FIG. **6**. The planar version 110 of the FEH#5 appeared to provide similar results as the FEH#5 and its duplicate FEH 05.

With reference now to FIG. **7** a power output graph demonstrating the power and voltage generation as a function of resistance and flow rate for a third example flow harvester device **100** is shown. The FEH device **100** used in this example has a piezoelectric bimorph **120** with a length of approximately 91 mm, a width of approximately 17 mm, and a thickness of approximately 0.8 mm. In this example, as shown in the graph in FIG. **7**, this FEH device **100** generated a minimum power output of approximately 1 mW and a maximum power output of approximately 20 mW of stable power under a flow rate of 12 LPM. In an embodiment, an array of 100 FEH devices **110** consisting of the FEH device **100** in the example in FIG. **7** could produce up to 2 W of power.

With reference now to the embodiment illustrated in FIGS. **8**A-**8**G, a flow energy harvesting device **200** having a spline nozzle or flow constriction section **240** and an in-flow piezoelectric bimorph actuator **120** is shown. In this embodiment, the flow energy harvesting device **200** includes a harvester pipe **230** having a flow inlet **232** that receives flow from a primary pipe at one end and a flow outlet **234** at the opposite end of the harvester pipe **230** that returns the flow into the primary pipe. The flow inlet **232** may include an external fitting **230**, for example a National Pipe Thread Taper (NPT) fitting coupled to the harvester pipe at the fluid inflow path location, as shown in FIGS. **8**A and **8**E-**8**G. The flow path of a fluid inflow (from an upstream direction) is indicated in FIG. **8**A with arrows in the direction of flow. Similarly, the flow outlet **234** may also include an external fitting **238**, for example, a NPT fitting coupled to the harvester pipe at the fluid outflow path location, as shown in FIGS. **8**A and **8**E-**8**G. The flow path of the fluid outflow (from the upstream to the downstream direction) is also indicated in FIG. **8**A with the arrows in the direction of fluid flow. The fluid inlet **232** and fluid outlet **234** can be manufactured using any fitting suitable for connecting to a coupled flow harvester device **100** and/or **200**, the main pipe

with which the flow harvester device **200** is integrated, or any suitable connection required at each of the fluid inlet **232** and/or outlet **234** locations. The fluid inlet **232** and outlet **234** do not require a fitting **236** and/or **238** and can be internally threaded within the harvester pipe **230**, or include just an opening at each end with no threading or fitting attached.

With continued reference to FIGS. **8**A-**8**G, the harvester pipe **230** may further include a flow diverter **250** fitted within the harvester pipe **230**, for example in the pipe cavity, and coupled to the flow inlet **232** at one end and the flow outlet **234** at the opposite end, as shown in FIGS. **8**A and **8**G. The flow diverter **250**, according to an embodiment, is configured to redirect the fluid flow from the main pipe through the harvester pipe **230**, as indicated by the flow path arrows in FIG. **8**A. The flow diverter **250**, as shown in FIGS. **8**A and **8**F, may include an inlet section **252** coupled to the flow inlet **232** at a first end of the harvester pipe **230**. The inlet section **252**, according to this embodiment, has an opening matching an interior of the harvester pipe (cavity) **230** such that the fluid can flow through the interior cross-section of the harvester pipe **230**. As shown in FIGS. **8**A and **8**G, the harvester pipe **230** further includes a flow constriction section **240** coupled to a second end of the inlet section **252** opposite the flow inlet **232**. According to the embodiment shown in FIGS. **8**A and **8**G, the constriction section **240** may be positioned at a midpoint of the harvester pipe **230**, however the constriction section **240** is not limited to this particular embodiment, and may, instead, be positioned at an end of the harvester pipe **230** or at any location to provide desired oscillatory vibration in the fluid flow. The constriction section **240**, according to the embodiment shown in FIGS. **8**A and **8**G has a spline shape with a substantially reduced opening size at a constriction point or a necking or bottle-neck area **210** along the spline shape. The constriction point **210**, according to this embodiment, is configured to create an oscillatory pressure amplitude resulting from the reduced flow opening within the harvester pipe **230**. While the constriction point **210**, according to this embodiment, is positioned at a midpoint of the harvester pipe **230**, it is not limited to this location, and may be placed at any location within the harvester pipe **230** to produce the desired oscillatory pressure amplitude. The constriction section **240** and point **210**, according to this embodiment, are created in a spline shape such that two mirror-image spline shapes converge at a point to create the constriction point (or throat) **210**, and diverge in a direction away from the constriction point **210** in a direction downstream to couple with an outlet section **254** at a first end, the outlet section **254** being coupled to the flow outlet **234** at an opposite second end, as shown in FIG. **8**A. The outlet section **254**, according to this embodiment, has an opening matching a widest section of the spline shape at the constriction section **240** and is configured to allow the fluid flow to exit the harvester pipe **230** through the flow outlet **234**. The spline shape of the constriction section **240** as well as the outlet section **254** may be manufactured in a variety of ways, for example, using spline nozzle or constrictor inserts **260**, having a cubic or higher order spline shape, as shown in the embodiment of FIGS. **8**A and **8**G. These inserts **260** may be symmetrical with one another, or may be asymmetrical, and include the shape of the constriction section **240** and/or point **210**, functioning like a mold, blocking fluid flow from areas where the inserts **260** are positioned.

The harvester pipe **230**, according to this embodiment, as shown in FIGS. **8**A-**8**C, also includes a piezoelectric actuator **20**. The piezoelectric actuator **20** may include any form or vibration mode. In the embodiment shown in FIG. **8**A-**8**C, the piezoelectric actuator **20** is fixed within the harvester pipe **230** and includes a cantilever beam system **122** having a free end or beam **124** extending from the inlet section **252** in the direction of fluid flow at least through the constriction section **240** and the constriction point **210**. The piezoelectric actuator **20**, in this embodiment, is fixed in a particular position within the flow energy harvester **200** such that the fluid flow past the constriction point **210** from the inlet section **252** induces vibrations in the free end of the beam **124** sufficient to cause the direct piezoelectric effect in the piezoelectric actuator **20** and to generate electrical power. The piezoelectric actuator **20**, according to the embodiment shown in FIGS. **8**A-**8**C may be a piezoelectric bimorph **120**. The bimorph **120** may be made from any piezoelectric material suitable for a bimorph **120**. In one embodiment, the piezoelectric material of the bimorph **120** is lead zirconate titanate (PZT).

The piezoelectric actuator **120** according to the embodiment shown in FIGS. **8**A-**8**C, may further include an electrical connection component **128** coupled to the cantilever beam system **122** at an end opposite to the free end of the beam **124** such that the electrical power generated by the vibrations in the beam at the free end **124** are transferred to the electrical connection component **128** which may then be connected to a battery, a supercapacitor, a power conditioning circuitry device such as a rectifier circuit or a capacitance device, a DC to DC amplifier, etc., for storing the generated power. The electrical connection component **128** of the piezoelectric actuator **20**, **120**, according to this embodiment, may be accommodated within a flow diverter clamp **256**, as shown in FIGS. **8**A, **8**C, and **8**F, such that fluid flow is diverted around it. The flow diverter clamp **256**, according to this embodiment, may be part of the flow diverter **250** and accommodated within the inlet section **256** and positioned along a centerline of the inlet section **256** spaced from the flow inlet **232** such that fluid entering the harvester pipe **230** is prevented from flowing through the flow diverter clamp **256** and is rerouted around the flow diverter clamp **256** in the inlet section **252**. As shown in FIG. **8**A, the flow diverter clamp **256** forces fluid flow to reroute around the non-exposed portions of the piezoelectric actuator **20**, **120**, including the electrical connection component **128**.

According to an embodiment, for example, as shown in FIG. **8**D, the harvester pipe **230** may have cut-outs or openings **228** defined in through an exterior of the harvester pipe **230** and coupled to a location where the electrical connection component **128** and diverter clamp **256** are positioned within the harvester pipe **230**. The cut-outs or openings **228**, according to this embodiment, allow for any wiring or electrical components necessary to connect with the electrical connection component **128** for energy transfer and storage to be run through the harvester pipe **230** in a location protected from fluid flow.

With continued reference to FIGS. **8**A and **8**D, the harvester pipe **230** may also include a fluid sealing mechanism **270** surrounding an inner diameter of the harvester pipe **230**. The sealing mechanism **270**, for example, may be an o-ring seal to prevent any fluid from leaking out of the harvester pipe **230** around the flow path created by the flow diverter **250**. The harvester pipe **230** according to the embodiment shown in FIGS. **8**A-**8**G is a planar pipe. However, in other embodiments, the harvester pipe **230** can include any shape, for example, the harvester pipe **230** may be a circular pipe.

According to some embodiments, for example, as shown in FIGS. **8**A-**8**G and **9**A-**9**G, the spline shape of the flow constriction section **240**, **340** may be designed to have a flow

velocity greater than 5 meters per second (m/s). In another embodiment, the spline shape of the flow constriction section **240**, **340** may be designed to a have flow velocity greater than 20 meters per second (m/s). The spline shape of the flow constriction section **240**. **340** of the flow energy harvesting device **200**, **300**, according to these embodiments, may having a converging opening size which narrows to a minimum in cross-sectional flow area at the constriction point **210**, **310** and then diverges to a maximum cross-sectional flow area of the flow constriction section **240**, **340** where it is coupled to the outlet section **254**, **354**, creating a flow area through the constriction point **210**, **310** designed to have flow velocity greater than 5 meters per second (m/s). In an embodiment, the flow velocity through the constriction point **210**, **310** exceeds 20 m/s.

According to the embodiments shown in FIGS. **8**A-**8**G and **9**A-**9**G, for example, the flow energy harvesting device **200**, **300** may be configured to be integrated with the fluid flow path in an oil well production casing **520** within a circumferential region surrounding an outer diameter of an inner pipe **510** (for example, as shown in FIGS. **10**A-**10**H and **10**J, and in FIG. **2**).

With reference now to the embodiment illustrated in FIGS. **9**A-**9**G, a flow energy harvesting device **300** having a spline nozzle or flow constriction section **240** and a pair of piezoelectric flextensional actuators **220** out of flow coupled to a non-piezoelectric beam **224** extending in-flow is shown. In this embodiment, the flow energy harvesting device **300** includes a harvester pipe **330** having a flow inlet **332** that receives flow from a primary pipe at one end and a flow outlet **334** at the opposite end of the harvester pipe **330** that returns the flow into the primary pipe. The flow inlet **332** may include an external fitting **336**, for example a NPT fitting coupled to the harvester pipe **330** at the fluid inflow path location. The flow path of a fluid inflow (from an upstream direction) is indicated in FIG. **9**A with arrows in the direction of flow. Similarly, the flow outlet **334** may also include an external fitting **338**, for example, a NPT fitting coupled to the harvester pipe **330** at the fluid outflow path location. The flow path of the fluid outflow (from the upstream to the downstream direction) is also indicated in FIG. **9**A with the arrows in the direction of fluid flow. The fluid inlet **332** and fluid outlet **334** can be manufactured using any fitting suitable for connecting to a coupled flow harvester device **100**, **300**, the main pipe with which the flow harvester device **300** is integrated, or any suitable connection required at each of the fluid inlet **332** and/or outlet **334** locations. The fluid inlet **332** and outlet **334** do not require a fitting **336** and/or **338** and can be internally threaded within the harvester pipe **330**, or include just an opening at each end with no threading or fitting attached, for example, as shown in FIGS. **9**E-**9**G.

With continued reference to FIGS. **9**A-**9**G, the harvester pipe **330** may further include a flow diverter **350** fitted within the harvester pipe **330**, for example in the pipe cavity, and coupled to the flow inlet **332** at one end and the flow outlet **334** at the opposite end, as shown in FIGS. **9**A and **9**G. The flow diverter **350**, according to an embodiment, is configured to redirect the fluid flow from the main pipe through the harvester pipe **330**, as indicated by the flow path arrows in FIG. **9**A. The flow diverter **350**, as shown in FIGS. **9**A and **9**F, may include an inlet section **352** coupled to the flow inlet **332** at a first end of the harvester pipe **330**. The inlet section **352**, according to this embodiment, has an opening matching an interior of the harvester pipe (cavity) **330** such that the fluid can flow through the interior cross-section of the harvester pipe **330**. As shown in FIGS. **9**A and **9**G, the harvester pipe **330** further includes a flow constriction section **340** coupled to a second end of the inlet section **352** opposite the flow inlet **332**. According to the embodiment shown in FIGS. **9**A and **9**G, the constriction section **340** may be positioned at a midpoint of the harvester pipe **330**, however the constriction section **340** is not limited to this particular embodiment, and may, instead, be positioned at an end of the harvester pipe **330** or at any location to provide desired oscillatory vibration in the fluid flow. The constriction section **340**, according to the embodiment shown in FIGS. **9**A and **9**G has a spline shape with a substantially reduced opening size at a constriction point or a necking or bottle-neck area **310** along the spline shape. The constriction point **310**, according to this embodiment, is configured to create an oscillatory pressure amplitude resulting from the reduced flow opening within the harvester pipe **330**. While the constriction point **310**, according to this embodiment, is positioned at a midpoint of the harvester pipe **330**, it is not limited to this location, and may be positioned at a different location within the harvester pipe **330** to maximize the desired oscillatory pressure amplitude, as required. The constriction section **340** and point **310**, according to this embodiment, are created in a spline shape such that two mirror-image spline shapes converge at a point to create the constriction point (or throat) **310**, and diverge in a direction away from the constriction point **310** in a direction downstream to couple with an outlet section **354** at a first end, the outlet section **354** being coupled to the flow outlet **334** at an opposite second end, as shown in FIG. **9**A. The outlet section **354**, according to this embodiment, has an opening matching a widest section of the spline shape at the constriction section **340** and is configured to allow the fluid flow to exit the harvester pipe **330** through the flow outlet **334**. The spline shape of the constriction section **340** as well as the outlet section **354** may be manufactured in a variety of ways, for example, using spline nozzle or constriction inserts **360**, as shown in the embodiment of FIGS. **9**A and **9**G. These inserts **360** may be symmetrical with one another, or may be asymmetrical, and include the shape of the constriction section **340** and point **310**, functioning like a mold, blocking fluid flow from areas where the inserts **360** are positioned.

The harvester pipe **330**, according to this embodiment, as shown in FIGS. **9**A-**9**C, also includes a piezoelectric actuator **20**. The piezoelectric actuator **20** may include any form of piezoelectric actuator **20**. In the embodiment shown in FIG. **9**A-**9**C, the piezoelectric actuator **20**, **220** is fixed within the harvester pipe **330** and includes a cantilever beam system **222** having a non-piezoelectric free end **224** extending from the inlet section **352** in the direction of fluid flow at least through the constriction section **340** and the constriction point **310**. The piezoelectric actuator **20**, **220**, in this embodiment, is fixed in a particular position within the flow energy harvester **300** such that the fluid flow past the constriction point **340** from the inlet section **352** induces vibrations in the free end **224** sufficient to cause the direct piezoelectric effect in the piezoelectric actuator **20**, **220** and to generate electrical power. The piezoelectric actuator **20** according to the embodiment shown in FIGS. **9**A-**9**C may be a piezoelectric flextensional actuator **220** having a stack of at least two beams **226**, at least one of which is a flextensional piezoelectric beam, integrated around a cantilever adaptor beam **227** which is coupled to the beam having a free end **224** that extends from the inlet section **352** in the direction of fluid flow. In an embodiment, the beam having a free end **224** that extends from the inlet section **352** is a non-piezoelectric metal beam. The piezoelectric flexten-

sional actuator **220** may be made from any piezoelectric material suitable for a flextensional actuator **220**. In one embodiment, the piezoelectric material of the flextensional actuator **200** is lead zirconate titanate (PZT).

The piezoelectric actuator **20**, **220** according to the embodiment shown in FIGS. **9**A-**9**C, may further include an electrical connection component **328** coupled to the stack of at least two beams **226**, at least one of which is a flextensional piezoelectric beam, integrated around the cantilever adaptor beam **227** coupled to the beam having a free end **224** such that the electrical power generated by the vibrations in the beam at the free end **224** are transferred to the electrical connection component **328** which may then be connected to a battery, a supercapacitor, a power conditioning circuitry device such as a rectifier or a capacitance device, a DC to DC amplifier, etc., for storing the generated power. The electrical connection component **328** of the piezoelectric actuator **20**, **220**, according to this embodiment, may be accommodated within a flow diverter clamp **356**, as shown in FIGS. **9**A, **9**D, and **9**F, such that fluid flow is diverted around it. The flow diverter clamp **356**, according to this embodiment, may be part of the flow diverter **350** and accommodated within the inlet section **352** and positioned along a centerline of the inlet section **352** spaced from the flow inlet **332** such that fluid entering the harvester pipe **330** is prevented from flowing through the flow diverter clamp **356** and is rerouted around the flow diverter clamp **356** in the inlet section **352**. As shown in FIG. **9**A, the flow diverter clamp **356** forces fluid flow to reroute around the non-exposed portions of the piezoelectric actuator **20**, **220**, including the electrical connection component **328**.

According to an embodiment, for example, as shown in FIG. **9**E, the harvester pipe **330** may have cut-outs or openings **228** defined in through an exterior of the harvester pipe **330** and coupled to a location where the electrical connection component **328** and diverter clamp **356** are positioned within the harvester pipe **330**. The cut-outs or openings **228**, according to this embodiment, allow for any wiring or electrical components necessary to connect with the electrical connection component **328** for energy transfer and storage to be run through the harvester pipe **330** in a location protected from fluid flow.

With continued reference to FIGS. **9**A and **8**E, the harvester pipe **330** may also include a fluid sealing mechanism **370** surrounding an inner diameter of the harvester pipe **330**. The sealing mechanism **370**, for example, may be an o-ring seal to prevent any fluid from leaking out of the harvester pipe **370** around the flow path created by the flow diverter **356**. The harvester pipe **330** according to the embodiment shown in FIGS. **9**A-**9**G is a planar pipe. However, in other embodiments, the harvester pipe **330** can include any shape, for example, the harvester pipe **330** may be a circular pipe.

With reference to the embodiments shown in FIGS. **10**A-**10**H and **10**J, a flow energy harvesting system **500** including an array of flow energy harvesting devices **100** and configured to be integrated within an annular fluid flow path of a primary pipe **510** is shown. The flow energy harvesting system **500**, according to this embodiment, may be positioned around a primary pipe, well, or tube **510** having an inner diameter and an outer diameter, and a casing or sleeve **520** positioned around the outer diameter or annulus of the primary pipe **510** and spaced from the primary pipe **510**, as shown in FIGS. **10**B, **10**G, and **10**H. The annular area between the primary pipe **510** and the casing or sleeve **520**, according to these embodiments, may be subject to a fluid flow (for example, as discussed above regarding FIG. **2**), and a plurality of flow energy harvesting devices **100** may positioned around the outer diameter of the primary pipe **510** between the casing **520** and the primary pipe **510**, as shown in the embodiments in FIGS. **10**B, **10**H, and **10**G, for example. As used herein, the term "plurality" means more than one. In an embodiment, for example as shown in FIG. **10**B, the plurality of flow energy harvesting devices **100** may be spaced to have at least a 0.125 inch clearance from the casing **520**.

In an embodiment, for example, as shown in FIG. **10**B, the primary pipe **510** may have an outer diameter ranging from approximately 2.875 inches to approximately 9 inches, and the outer casing or sleeve **520** may have an inner diameter ranging from approximately 5.375 inches to approximately 9.5 inches. In an embodiment, the outer casing or sleeve **520** may have an inner diameter that is greater than 9.5 inches. In an embodiment, the outer diameter of the primary pipe **510** may be 6 inches, and the inner diameter of the outer casing or sleeve **520** may be 8.5 inches, such that with a 0.125 inch clearance from the casing **520**, each flow energy harvesting device **100** is no greater than 2.375 inches in depth around the outer diameter of the primary pipe **510**, in this embodiment.

With particular reference to the embodiments shown in FIGS. **10**A, **10**D-**10**F, and **10**H, the plurality of flow energy harvesting devices **100** may consist of wedges **530** of flow energy harvesting devices **100**, for example the flow energy harvesting devices **100**, **200**, **300** described above with reference to either of FIG. **8**A or **9**A. In an embodiment shown in FIG. **10**A, for example, the flow energy harvesting devices **100** may be grouped in wedges **530**, where each wedge **530** includes four flow energy harvesting devices **100**, and each primary pipe **510** can accommodate a total of five wedges **530** around its outer diameter within the casing **520**. Thus, the flow energy harvesting system **500** according to the embodiment shown in FIG. **10**A, may include a total of 20 flow energy harvesting devices **100** around its perimeter in a single section **540**. FIG. **10**D depicts a schematic diagram of a single wedge unit or basic unit **530**, including four flow energy harvesting devices **100**, according to this embodiment. FIG. **10**E depicts a schematic diagram of a single section **540**, which includes a full set of five wedges or basic units **530** arranged annularly around the outer diameter of the primary pipe **510**, each basic unit **530** including four flow energy harvesting devices **100**, such that the section **540** includes 20 flow energy harvesting devices **100**, according to the embodiment. FIG. **10**F depicts a harvester assembly **550**, which includes "N" number of sections **540** each having a full set of five wedges or basic units **530** arranged annularly around the outer diameter of the primary pipe **510**, each section **530** including 20 flow energy harvesting devices **100**, such that the N sections **540** includes 20*N flow energy harvesting devices **100**, according to the embodiment.

The flow energy harvesting devices **100**, according to these embodiments, and as shown in FIGS. **10**C and **10**G, may be connected to adjacent flow energy harvesting devices **100** either in parallel or in series such that a power output of the flow energy harvesting system **500** is derived from the plurality of flow energy harvesting devices **100**. As shown in the embodiment in FIG. **10**C, for example, the flow energy harvesting system **500** may further include erosion resistant inserts **80**, for example, tungsten carbide, or any suitable erosion-resistant material, positioned around the piezoelectric actuators **20** within a fluid flow path. Each flow energy harvesting device **100** in the embodiment shown in FIG. **10**C may further include a cut-out or opening **28** accessing the piezoelectric actuator **20** for an electrical

connection to a power storage device, an electronic device, or to allow wires to be run through and routed against the annular pipe or tube **510**, **520** for connecting adjacent flow energy harvesting devices **100** to each other in parallel or in series. With further reference to the embodiment shown in FIG. **10**G, larger wires **90** connecting adjacent flow energy harvesting devices **100** may be run axially along a length of the exterior of the primary pipe **510** for series connection of adjacent flow energy harvesting devices **100**. Each wedge **530** in a section **540**, according to this embodiment, may include a pair of these axial cables **90**. Within the inner diameter of the primary pipe **510**, ribbon strips **95** may be positioned and tucked, according to the embodiment shown in FIG. **10**G. In this embodiment, the ribbon strips **95** may be used to connect adjacent flow energy harvesting devices **100** in parallel to the axial cables **90** running axially along the length of the exterior of the primary pipe **510**.

As shown in FIGS. **10**H and **10**J, the array of flow energy harvesting devices **100** of the flow energy harvesting system **500** may be positioned around the outer diameter of the primary pipe **510** between the casing **520** and the primary pipe **510** in wedges **530** and sections **540**. The flow energy harvesting system **500** according to the embodiment shown in FIG. **10**H may include ten sections **540** lined up along a length of the primary pipe **510** with the flow energy harvesting devices **100** each aligned and connected with the respective flow energy harvesting devices **100** in the adjacent section **540** such that a total of 200 flow energy harvesting devices **100** are positioned along the annulus of the primary pipe **510**. The outer casing or sleeve **520**, for example a 6 millimeter thick tube to protect the flow energy harvesting devices **100** may be placed around the flow energy harvesting system **500** and sealed against any pressure differentials, according to an embodiment.

According to an embodiment, each flow energy harvesting device **100** may be less than or equal to 4 inches in length, less than or equal to 1 inch in width, and less than or equal to 1 inch in thickness, and may produce at least 1 mW of power. The flow energy harvesting system **500**, according to this embodiment and the embodiment shown in FIG. **10**H, for example, having a total of 200 flow energy harvesting devices **100**, may, thus, produce at least 200*1 mW or 200 mW of power. In another embodiment, each flow energy harvesting device **100** of the flow energy harvesting system **500** may produce up to 20 mW of power, such that the flow energy harvesting system **500** may, thus, produce at least 200*20 mW or 4 W of power.

With reference to FIGS. **11** and **12**, specific parameters and ranges of embodiments of the present invention that have been tested as well as other useful parameters and ranges according to other embodiments of the invention are provided in the schematic diagram shown in FIG. **11** illustrating the flow energy harvester having a spline flow constriction section and a piezoelectric bimorph actuator according including an Entry Angle and an Exit Angle for reference in conjunction with the tables in FIG. **12** including the dimensions, parameters, flow date, and ranges for a flow energy harvesting device according to embodiments of the present invention.

While this invention has been described in detail with particular references to embodiments, the embodiments described herein are not intended to be exhaustive or to limit the scope of the invention to the exact forms disclosed. Persons skilled in the art and technology to which this invention pertains will appreciate that alterations and changes in the described structures and methods of assembly and operation can be practiced without meaningfully departing from the principles, spirit, and scope of this invention, as set forth in the following claims. Although relative terms such as "outer," "inner," "upper," "lower," "below," "above," "vertical," "horizontal," "top," "bottom," "middle," and similar have been used herein to describe a spatial relationship of one element to another, it should be understood that these terms are intended to encompass different orientations of the various elements and components of the invention in addition to the orientation depicted in the figures. Additionally, as used herein, the term "substantially," "about," "approximately," and similar are used as terms of approximation and not as terms of degree, and are intended to account for the inherent deviations in measured or calculated values that would be recognized by those of ordinary skill in the art. Moreover, the tasks described above may be performed in the order described or in any other suitable sequence. Instead, for each embodiment, one or more of the tasks described above may be absent and/or additional tasks may be performed. Furthermore, as used herein, when a component is referred to as being "on" another component, it can be directly or indirectly on the other component, meaning, for example, intervening layers, regions, or components may also be present. Moreover, when a component is referred to as being "coupled" to another component, it can be directly attached or connected to the other component, or other intervening components may also be present therebetween.

While the invention has been described in connection with certain embodiments, it is to be understood by those skilled in the art that the invention is not limited to the disclosed embodiments, but, on the contrary, is intended to cover various modifications included within the spirit and scope of the appended claims and equivalents thereof

What is claimed is:

1. A flow energy harvesting device configured to be integrated with a fluid flow path of a primary pipe, the flow energy harvesting device comprising a harvester pipe comprising:

a flow inlet that receives flow from the primary pipe at one end and a flow outlet at a different part of the harvester pipe that returns the flow into the primary pipe;

a flow diverter fitted within the harvester pipe and coupled to the flow inlet and the flow outlet, the flow diverter being configured to redirect the fluid flow from the main pipe through the harvester pipe and comprising

an inlet section coupled to the flow inlet at a first end,

a flow constriction section coupled to the inlet section and positioned at a midpoint of the harvester pipe, the flow constriction section having a spline shape with a substantially reduced flow opening size at a constriction point along the spline shape and configured to create oscillatory pressure amplitude resulting from the reduced flow opening within the harvester pipe, and

an outlet section coupled to the constriction section at a first end and coupled to the flow outlet at an opposite second end, the outlet section having an opening matching a widest section of the spline shape at the constriction section and configured to allow the fluid flow to exit the harvester pipe through the flow outlet; and

a piezoelectric actuator comprising a cantilever beam having a free end, wherein the free end extends from the inlet section in the direction of fluid flow at least through the constriction section and the constriction point such that the fluid flow past the constriction point from the inlet section induces vibrations in the free end

sufficient to cause a direct piezoelectric effect in the piezoelectric actuator and to generate electrical power.

2. The flow energy harvesting device of claim **1**, wherein the piezoelectric actuator comprises a bimorph.

3. The flow energy harvesting device of claim **2**, wherein the piezoelectric material of the bimorph comprises lead zirconate titanate (PZT).

4. The flow energy harvesting device of claim **2**, wherein

the flow diverter further comprises a flow diverter clamp accommodated within the inlet section and positioned along a centerline of the inlet section spaced from the flow inlet such that fluid entering the harvester pipe is prevented from flowing through the flow diverter clamp and is rerouted around the flow diverter clamp in the inlet section; and

the piezoelectric actuator further comprises an electrical connection component accommodated within the flow diverter clamp such that fluid flow is diverted around it, the electrical connection component being coupled to the cantilever beam at an end opposite to the free end such that the electrical power generated by the vibrations in the beam at the free end are transferred to and stored on an external power storage device through the electrical connection component.

5. The flow energy harvesting device of claim **1**, wherein the piezoelectric actuator comprises a piezoelectric flextensional actuator comprising a stack of at least two beams, at least one of which is a flextensional piezoelectric beam, integrated around a cantilever adaptor beam, the cantilever adaptor beam being coupled to the beam having a free end that extends from the inlet section in the direction of fluid flow at least through the constriction section and the constriction point and being configured to undergo and transmit oscillatory vibrations to the piezoelectric flextensional actuator via the cantilever adaptor beam.

6. The flow energy harvesting device of claim **5**, wherein the piezoelectric flextensional actuator comprises lead zirconate titanate (PZT).

7. The flow energy harvesting device of claim **6**, wherein the electrical power generated by the vibrations transferred via the cantilever adaptor beam are further transferred to and stored on an external power storage device electrically connected to the piezoelectric flextensional actuator.

8. The flow energy harvesting device of claim **1**, wherein the spline shape of the flow constriction section comprises a spline having a converging opening size which narrows to a minimum in cross-sectional flow area at the constriction point and then diverges to a maximum cross-sectional flow area of the flow constriction section where it is coupled to the outlet section, creating a flow area through the constriction point designed to have flow velocity greater than 5 meters per second (m/s).

9. The flow energy harvesting device of claim **8**, wherein the flow area through the constriction point is designed to have flow velocity greater than 20 meters per second (m/s).

10. The flow energy harvesting device of claim **1**, wherein the piezoelectric actuator is a piezoelectric unimorph actuator.

11. The flow energy harvesting device of claim **1**, wherein the harvester pipe is a planar pipe.

12. The flow energy harvesting device of claim **1**, wherein the harvester pipe is a circular pipe.

13. The flow energy harvesting device of claim **1**, wherein the flow energy harvesting device is configured to be integrated with the fluid flow path in an oil well production casing within a circumferential region surrounding an outer diameter of an inner pipe.

14. The flow energy harvesting device of claim **1**, wherein the flow constriction section comprises a pair of flow constrictor inserts positioned closer to the end of the harvester pipe at the outlet section, each flow constrictor insert having a cubic or higher order spline shape that is a mirror image of the other such that the pair of flow constrictors creates the flow constriction point at the midpoint of the harvester pipe having the substantially reduced opening size.

15. A flow energy harvesting system configured to be integrated with a fluid flow path of a primary pipe, the flow energy harvesting system comprising:

a primary pipe having an inner diameter and an outer diameter;

a casing positioned around the outer diameter of the primary pipe and annularly spaced from the primary pipe, the annular area between the primary pipe and the casing being subject to a fluid flow; and

a plurality of flow energy harvesting devices positioned around the outer diameter of the primary pipe between the casing and the primary pipe, the plurality of flow energy harvesting devices having a clearance from the casing,

wherein each flow energy harvesting device of the plurality of flow energy harvesting devices is connected in series and/or in parallel to adjacent flow energy harvesting devices of the plurality of flow energy harvesting devices such that a power output of the flow energy harvesting system is derived from the plurality of flow energy harvesting devices.

16. The flow energy harvesting system of claim **15**, wherein each flow energy harvesting device of the plurality of flow energy harvesting devices comprises a harvester pipe comprising:

a flow inlet that receives flow from the annular area around the primary pipe at one end and a flow outlet at a different part of the harvester pipe that returns the flow into the annular area;

a flow diverter fitted within the harvester pipe and coupled to the flow inlet and the flow outlet, the flow diverter being configured to redirect the fluid flow from the main pipe through the harvester pipe and comprising

an inlet section coupled to the flow inlet at a first end,

a flow constriction section coupled to a second end of the inlet section and positioned at a midpoint of the harvester pipe, the flow constriction section having a spline shape with a substantially reduced flow opening size at a constriction point along the spline shape and configured to create oscillatory pressure amplitude resulting from the reduced flow opening within the harvester pipe, and

an outlet section coupled to the constriction section at a first end and coupled to the flow outlet at an opposite second end, the outlet section having an opening matching a widest section of the spline shape at the constriction section and configured to allow the fluid flow to exit the harvester pipe through the flow outlet; and

a piezoelectric element comprising a cantilever beam having a free end, wherein the free end extends from the inlet section in the direction of fluid flow at least through the constriction section and the constriction point such that the fluid flow past the constriction point from the inlet section induces vibrations in the free end sufficient to cause a direct piezoelectric effect in the piezoelectric element and to generate electrical power.

17. The flow energy harvesting system of claim **16**, wherein the piezoelectric element comprises a lead zirconate titanate (PZT) bimorph.

18. The flow energy harvesting system of claim **15**, wherein the plurality of flow energy harvesting devices are positioned around the outer diameter of the primary pipe between the casing and the primary pipe in wedges and sections, wherein

each wedge comprises a plurality of flow energy harvesting devices positioned side by side around the outer diameter of the primary pipe and connected in series or in parallel to each adjacent flow energy harvesting device,

each section comprises at least two wedges, each wedge comprising a plurality of flow energy harvesting devices positioned side by side around the outer perimeter of the primary pipe, and

the flow energy harvesting system comprises at least one section, each section being lined up along a length of the primary pipe with the flow energy harvesting devices each aligned and connected with the respective flow energy harvesting device in the adjacent section.

19. The flow energy harvesting system of claim **18**, wherein the primary pipe has an outer diameter ranging from approximately 2.875 inches to approximately 9 inches and the casing has an inner diameter ranging from approximately 5.375 inches to approximately 9.5 inches.

20. The flow energy harvesting system of claim **18**, wherein each flow energy harvesting device is less than or equal to 4 inches in length, less than or equal to 1 inch in width, and less than or equal to 1 inch in thickness, and produces at least 1 milliwatt (mW) of power.

* * * * *