https://ntrs.nasa.gov/search.jsp?R=20170001637 2020-03-10T19:31:24+00:00Z

Testing Installed Propulsion for Shielded Exhaust Configurations

James Bridges, Gary G. Podboy, and Clifford A. Brown
NASA Glenn Research Center

22nd AIAA/CEAS Aeroacoustics Conference
Lyon, France, 01 June 2016

Supported by NASA Aeronautics Mission Directorate
Commercial Supersonics Project

Challenges of installed exhaust noise

- Prediction
  - Complex geometries, tightly integrated propulsion make complex grids
  - Distributed noise sources hard to propagate
  - Multiple-stream nozzles create large parameter space
- Model-scale Experiments
  - Large planforms to fit in facilities
  - Scale factors push frequencies
  - Jet flow supply bigger than engines

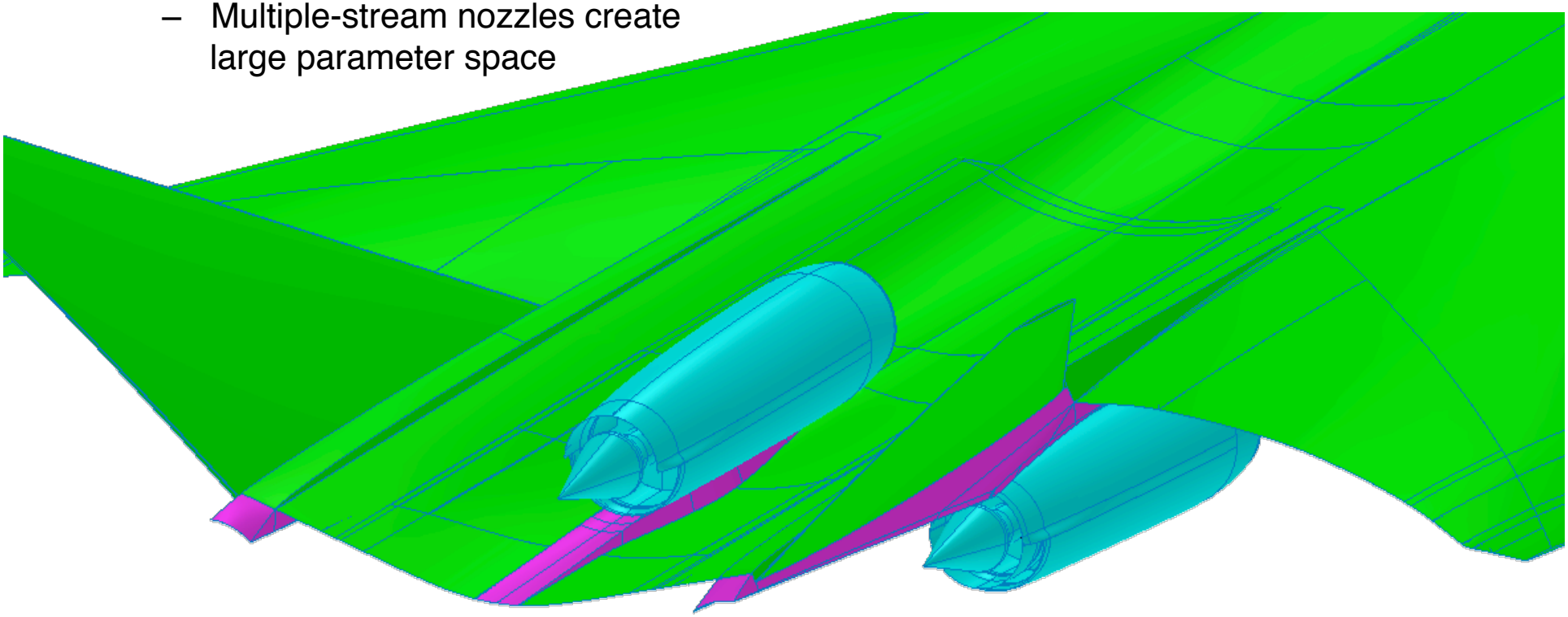

Doty, M.J., et al. "Jet Noise Shielding Provided by a Hybrid Wing Body Aircraft", *AIAA 2014-2625* (2014).

Aeroacoustic Facility Capability/Limitations

- Nozzle Acoustic Test Rig (NATR) in Aero-Acoustic Propulsion Lab at NASA Glenn
- Three independent air streams for nozzle models, large far-field
- 53” (1.35m) Ø freejet flight stream

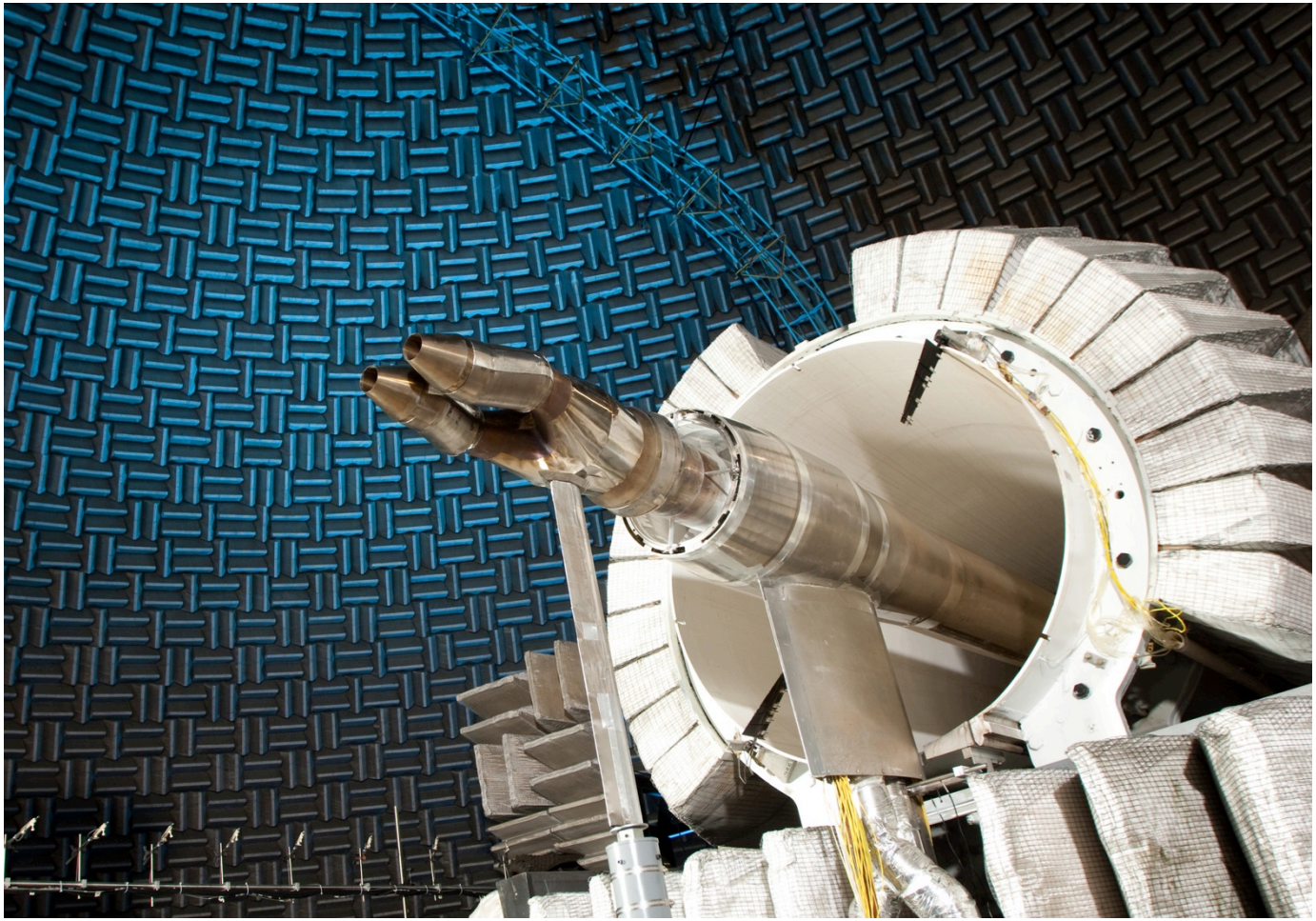

Simulating propulsion-airframe in NATR

- Aircraft positioned relative to microphones in ceiling

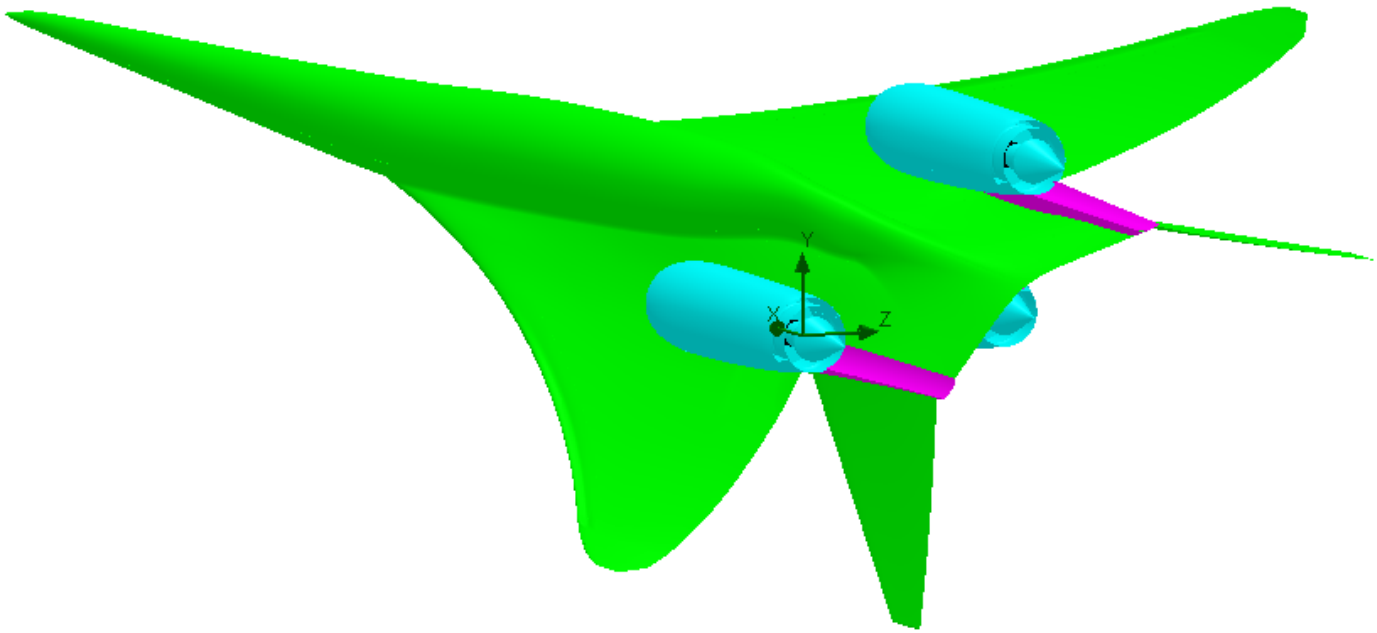

Simulating propulsion-airframe in NATR

- Aircraft superimposed on jet rig for outboard engine, matching nozzle size
- Note how much larger jet rig is than nacelle

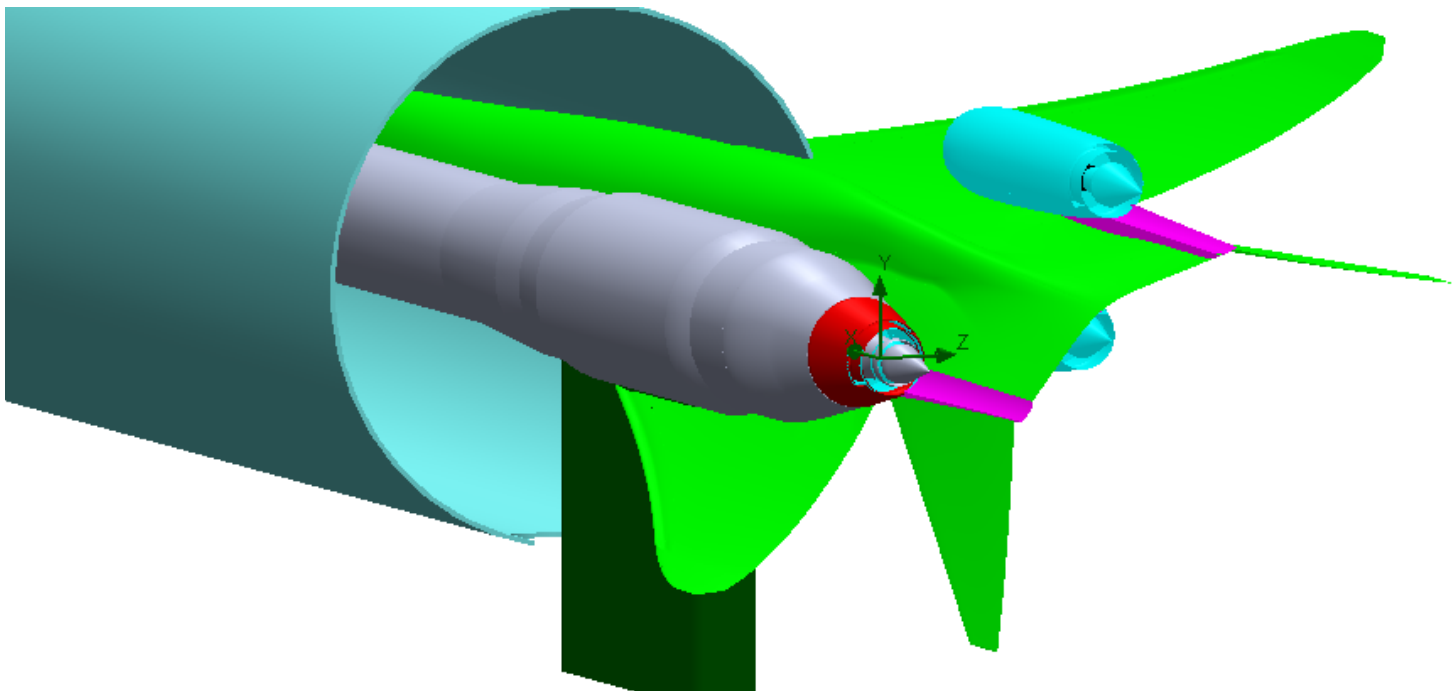

Fitting planform inside freejet flight stream

- Can’t put whole plane in!
- Avoid crossing freejet shear layer.
- How much vehicle planform required?

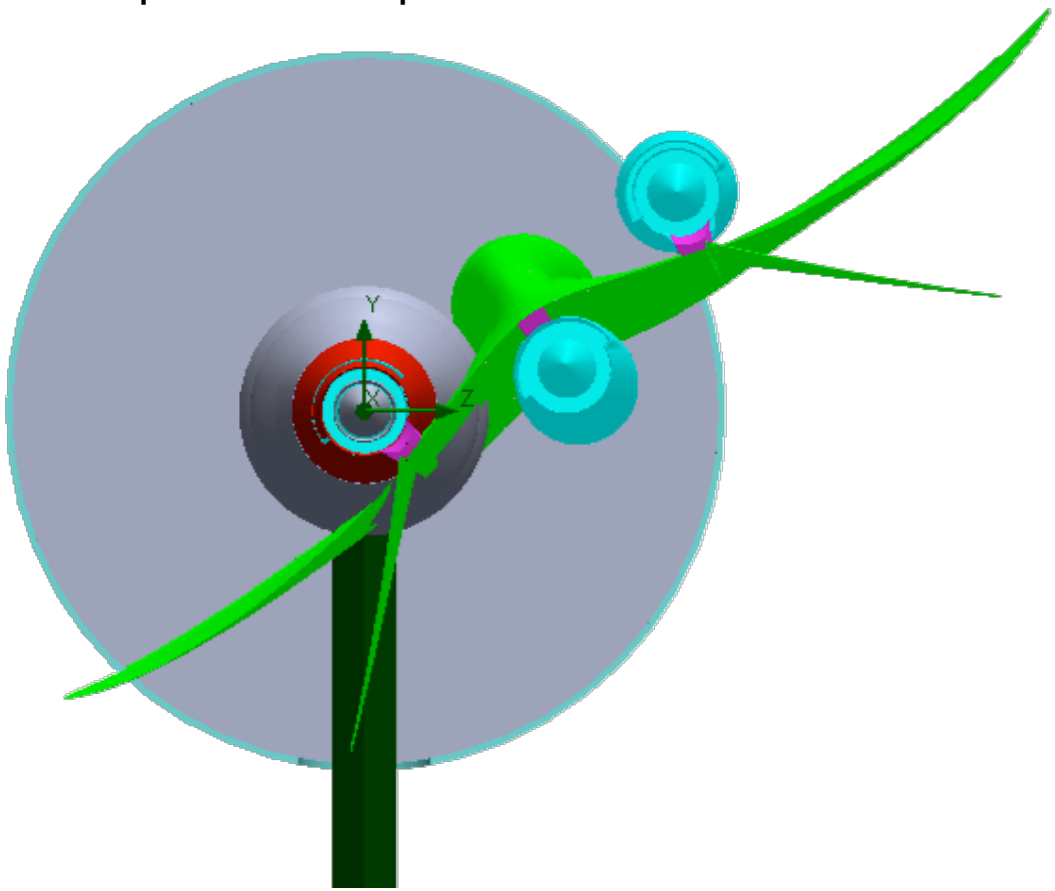

Objective 1: How much planform required for aeroacoustic testing of installed exhause noise?

- Trim aircraft planform to fit within freejet.
- Neglect curvatures outside of pylon contours in immediate contact with flow.

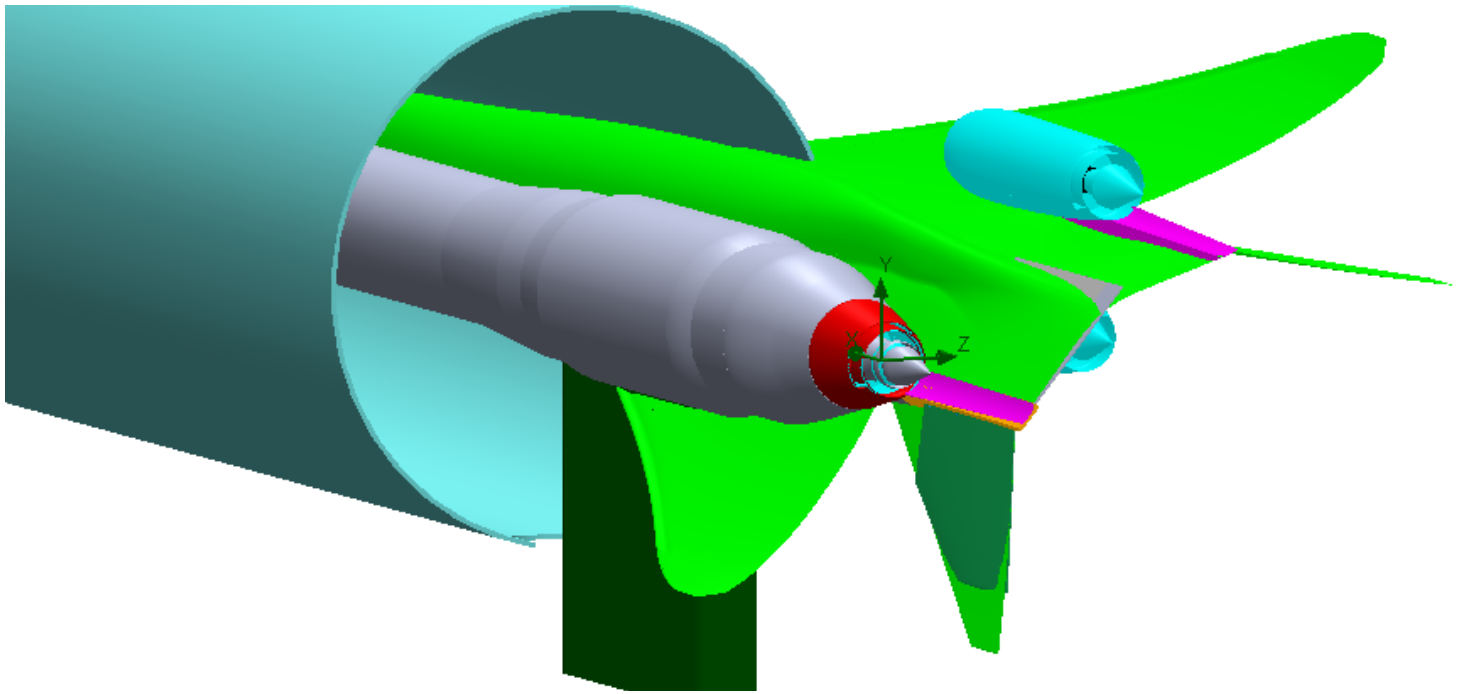

Objective 1: How much planform required for aeroacoustic testing of installed exhause noise?

- Result: minimal aircraft planform
  - Captures reflection of jet plume noise sources.
  - Provides accurate trailing edge to interact with turbulent plume.
  - Minimizes support hardware that may cause parasitic noise, reflection.

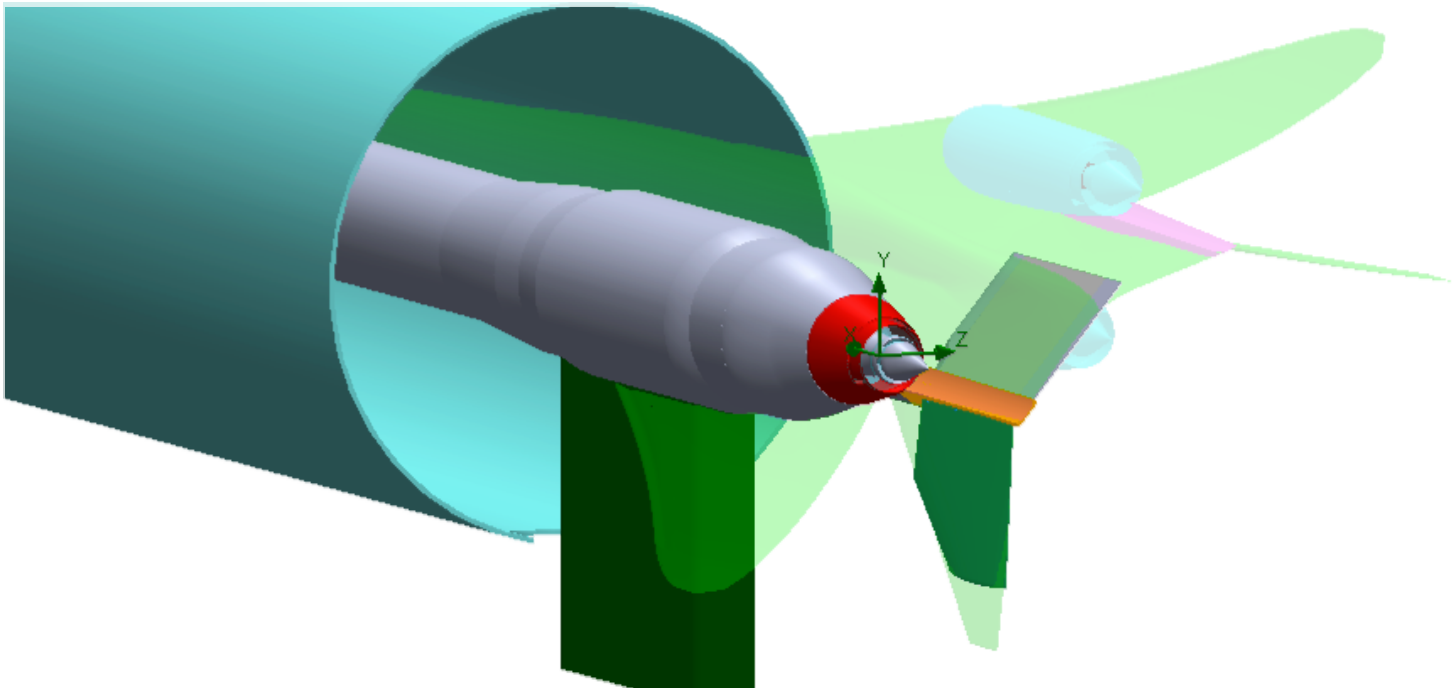

Objective 1 of current test was to determine size requirements for flight stream tests

Objective 2: Extending previous jet-surface interaction (JSI) database to realistic exhaust systems

- Initial JSI database created for simple, single-stream nozzle with semi-infinite flat surface without flight
- Modeling of acoustic impact due to shielding completed for initial JSI database[1].
- Extend JSI database by including
  - Plug nozzles
  - Dual-stream nozzles
  - Finite span of surface
  - Pylon features
  - ~~Flight stream~~

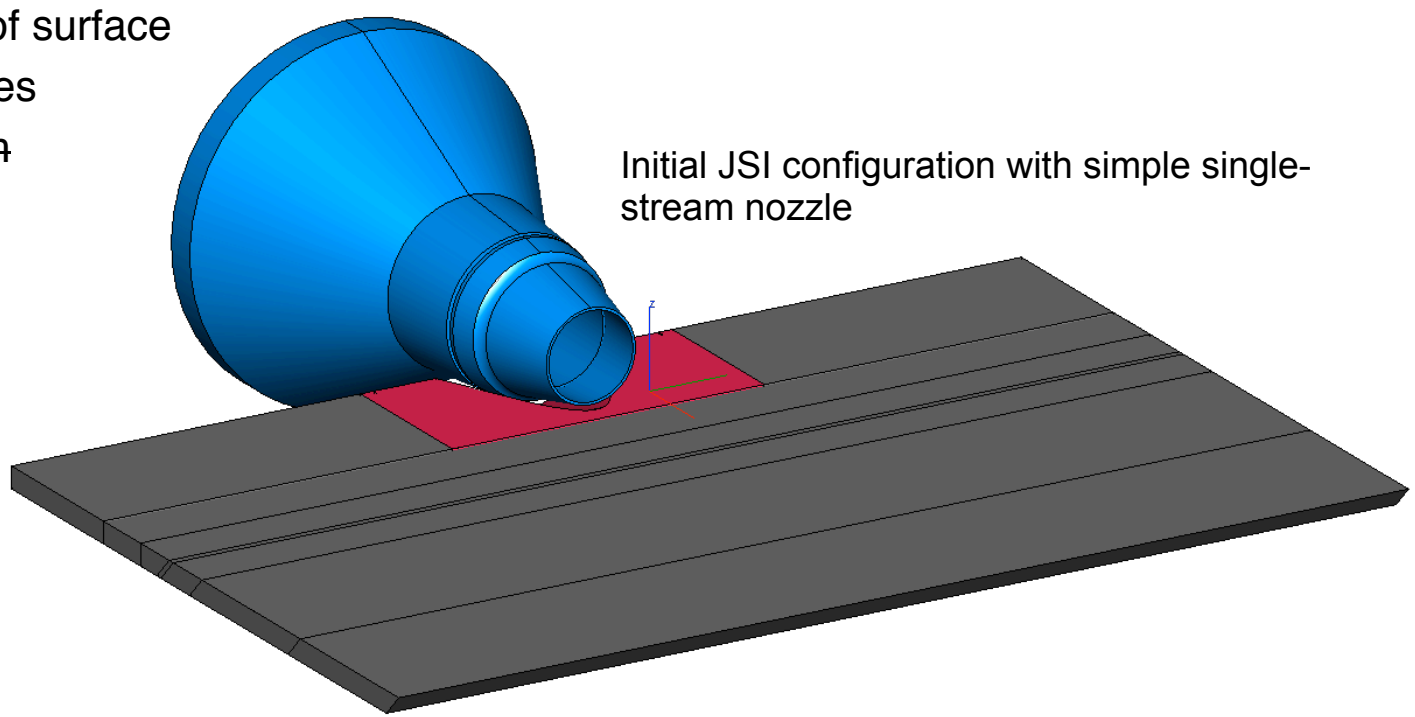

Initial JSI configuration with simple single-stream nozzle

[1]Brown, C., "Empirical Models for the Shielding and Reflection of Jet Mixing Noise by a Surface", AIAA 2015-3128

Progression of nozzle complexity

- Extending JSI from simple, single-stream jets to practical exhaust systems:

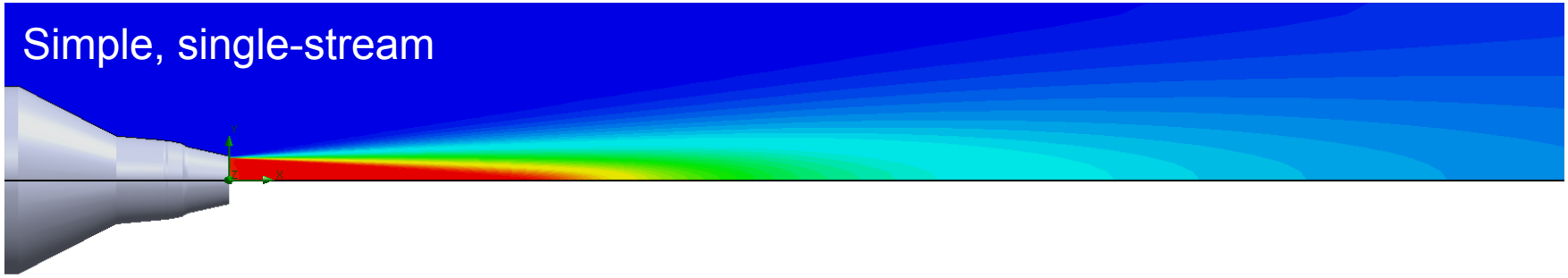

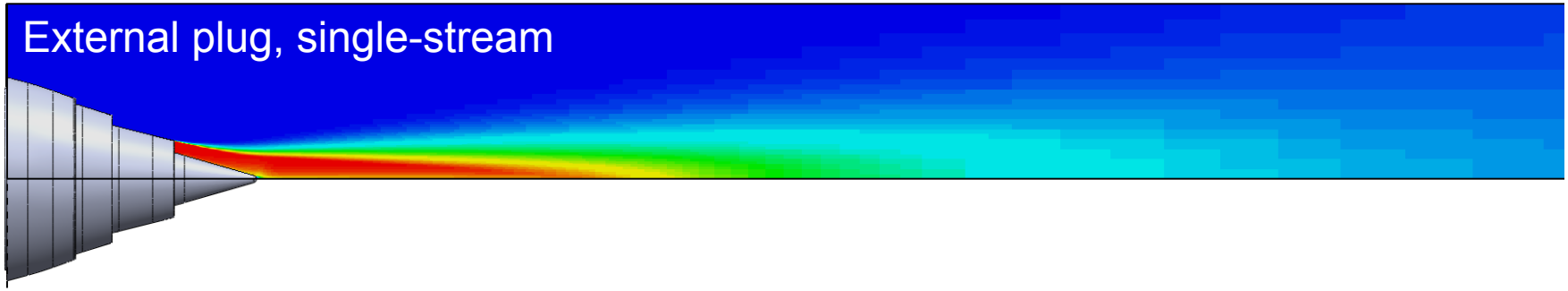

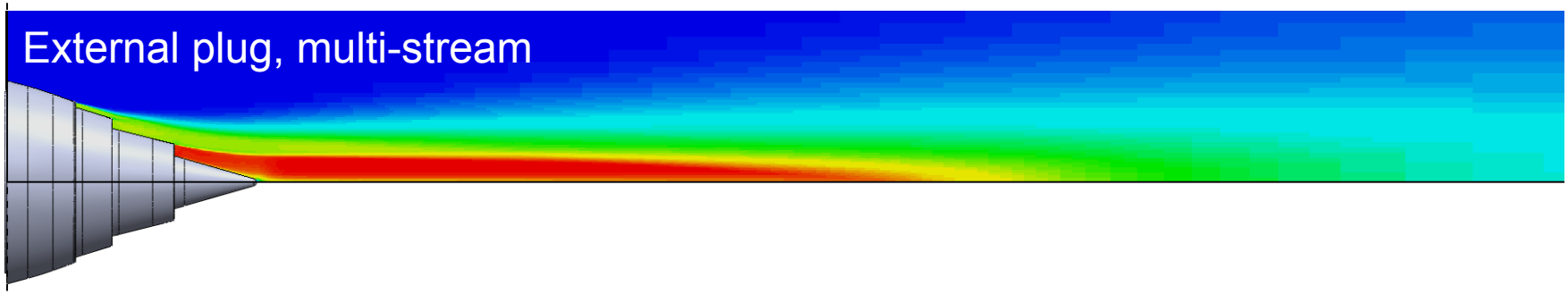

Flow matrices tested

- Single-stream on plugged nozzle to relate to simple, single-stream cases
  - Unheated, 0.5 < M < 1.4
  - Use both core stream or both to vary jet diameter
  - Equivalent diameters 3.7”-6.9” (93-172mm)

- Dual-stream flows on plugged nozzles (C1, C3)
  - Vary area ratio (1.0:1, 2.5:1)
  - Vary bypass ratio
  - Fixed temperature ratios
  - Equivalent diameters 5.2”-6.9” (132-172mm)

Table 1 Definitions of single-stream setpoints on the C1 nozzle. NPR_b matches NPR_c when outer stream is active.

Setpoint	NPR_c	NTR_c	NPR_b	*Ma*	*M*
300	1.200	1	1	0.50	0.52
330	1.200	1	1.200	0.50	0.52
500	1.435	1	1	0.70	0.74
550	1.435	1	1.435	0.70	0.74
700	1.856	1	1	0.90	0.98
770	1.856	1	1.856	0.90	0.98
9010	3.183	1	1	1.19	1.40

Table 2 Matrix of setpoints for conventional dual-stream flows on nozzles C1 and C3.

Setpoint	NPR_c	NTR_c	NPR_b	NTR_b
1312	1.3	3	1.22	1.25
1316	1.3	3	1.58	1.25
1518	1.5	3	1.8	1.25
1813	1.8	3	1.25	1.25
1815	1.8	3	1.5	1.25
1818	1.8	3	1.8	1.25
2116	2.1	3	1.6	1.25
2120	2.1	3	2.0	1.25
2323	2.3	3	2.3	1.25

Surface parametric variations tested—flat surface

- Vary standoff h_E and length x_E as before.
- Standoff and length measured from first nozzle lip.

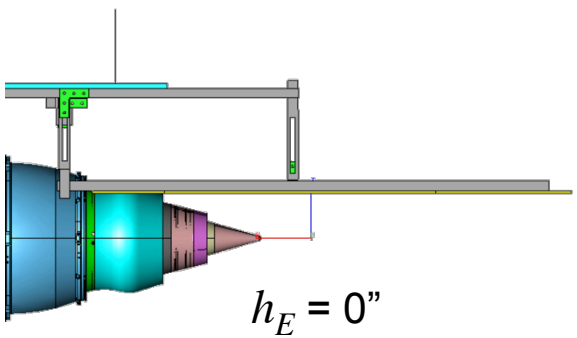

h_E = 0”

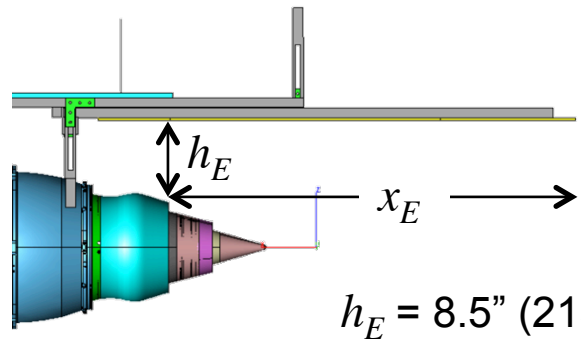

h_E = 8.5” (215mm)

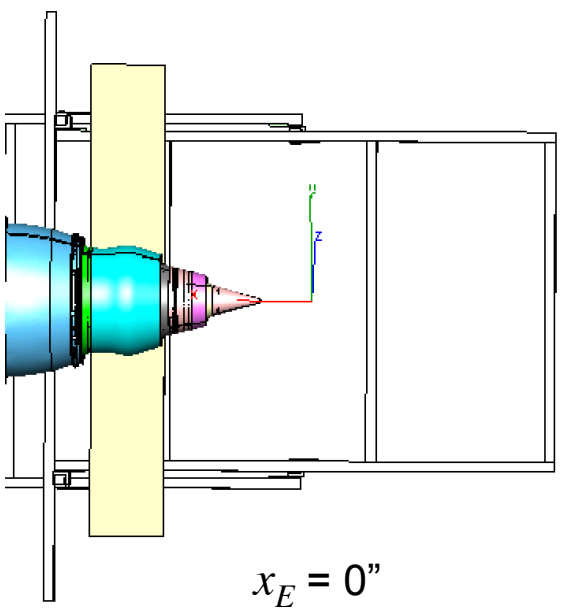

x_E = 0”

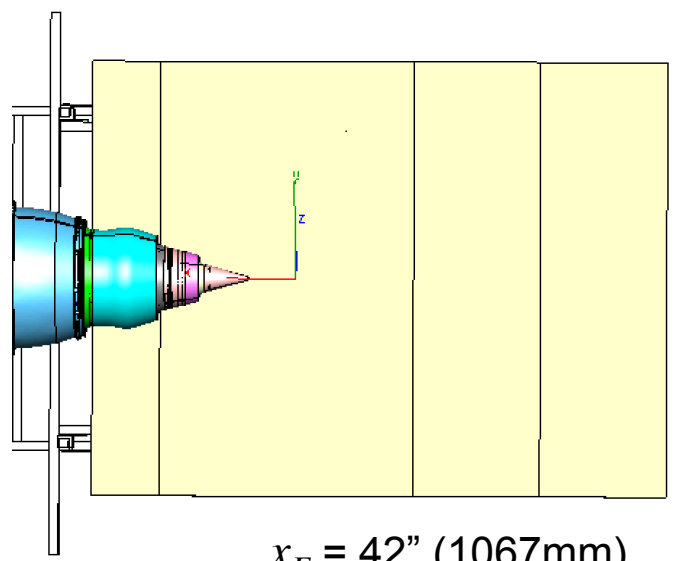

x_E = 42” (1067mm)

Complex planforms: Simulated LM1044 aircraft

- Planforms created for center engine and outboard engine configurations.
- Static test—no flight stream. No compromises on size.
- Scale factor ~9:1

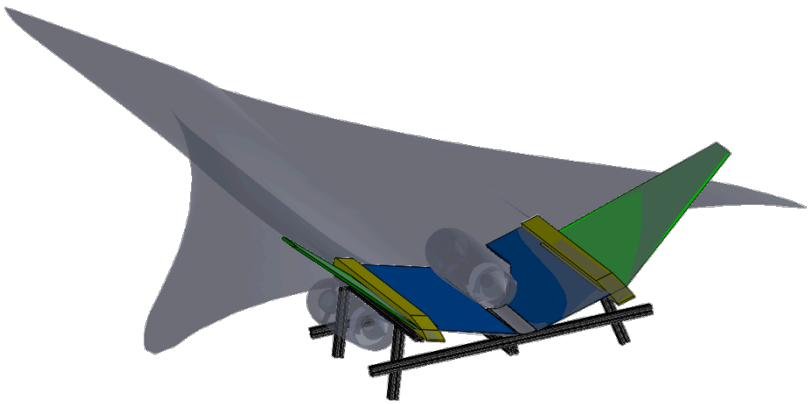

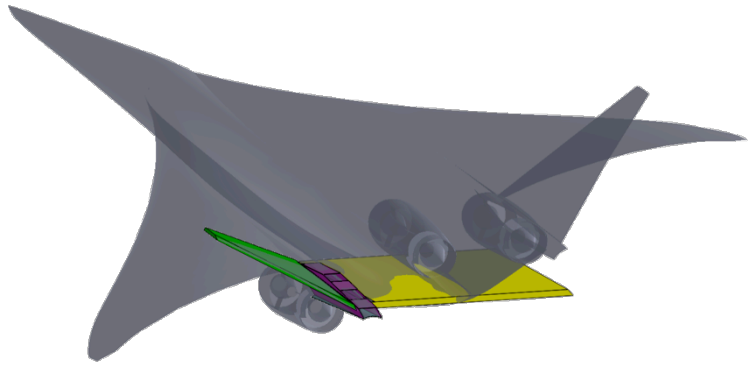

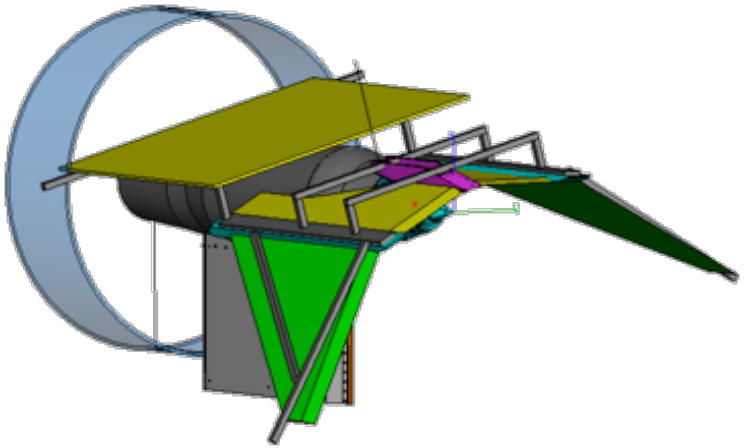

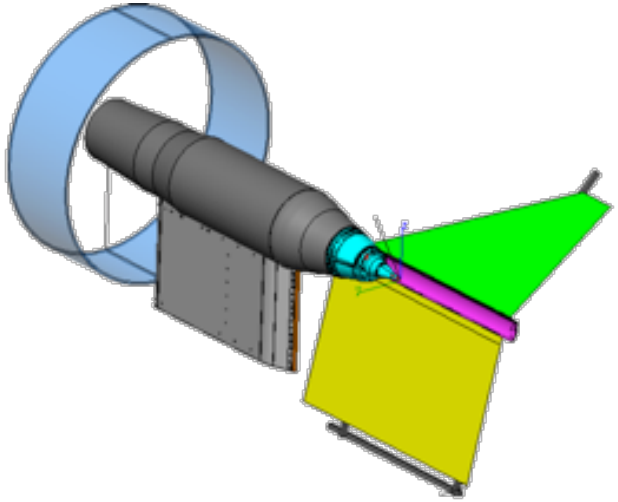

Problem: Rig-Planform Integration

- Issue with fitting surface around rig
  - Irregular mating surface
  - Real problem with variable standoff
- With flight this creates a juncture flow problem
  - Rig bigger diameter than nacelle
  - Critical (nonrepresentative) because leaves low-velocity deficit near nozzle.
- Need to cover some region upstream of nozzle lip
  - Represent fore of aircraft planform
  - Diffraction of sound at upstream edge of surface?

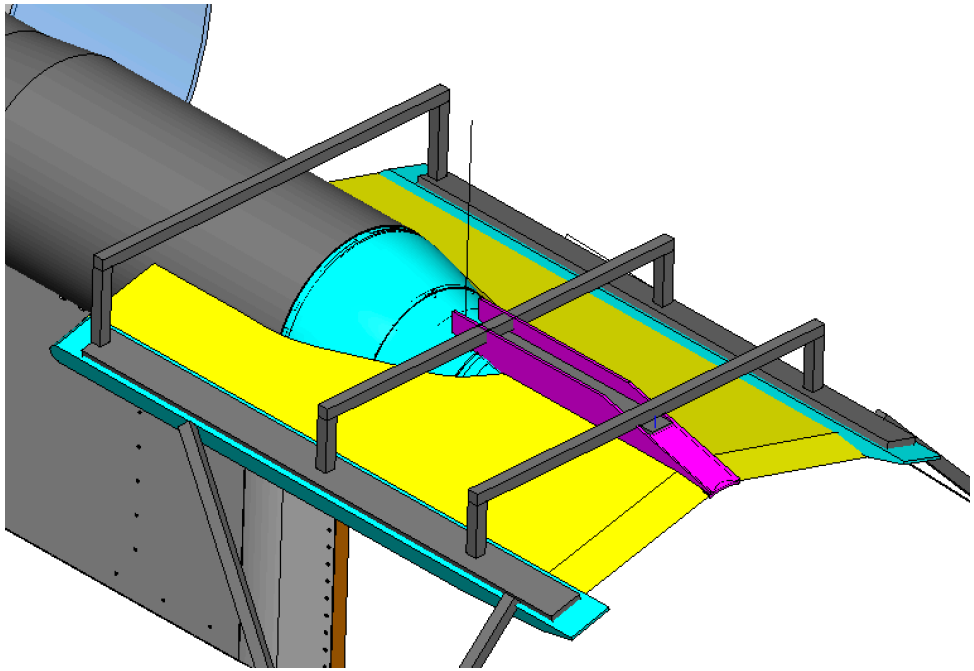

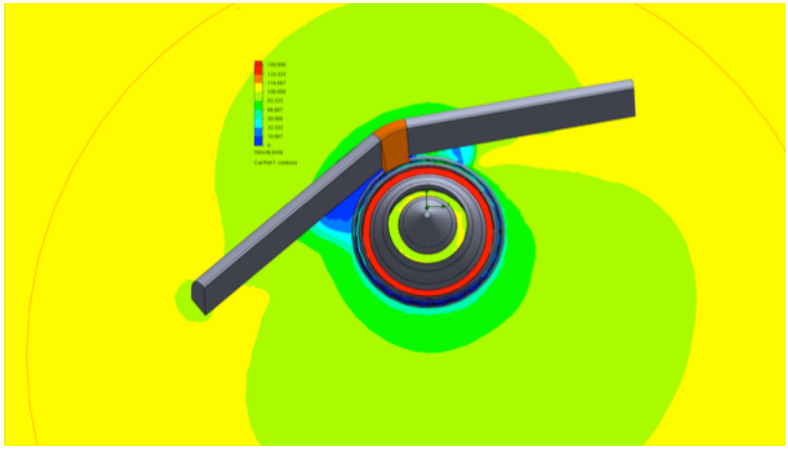

Solution: Biplane

- Add surface above rig, parallel to planform
- Extends acoustic shielding forward
- Simple, no interference with rig
- Design questions:
  - How big?
  - How much overlap with main surface?
  - What jet conditions needed?
- Several biplane geometries tried
- Phased array used to find leakage

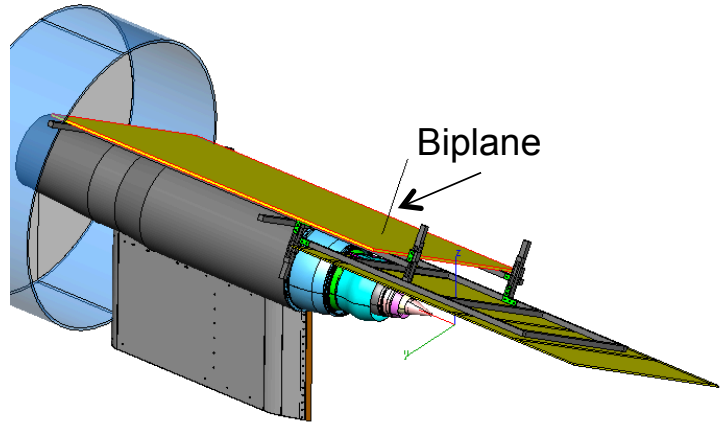

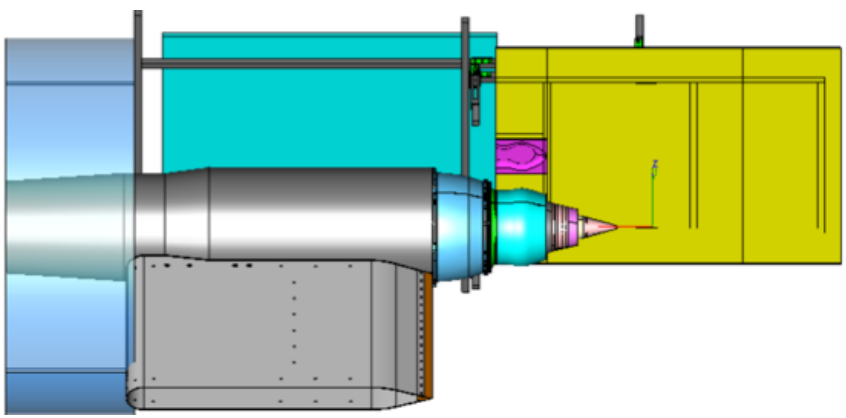

Long (1.2m) biplane surface, no overlap

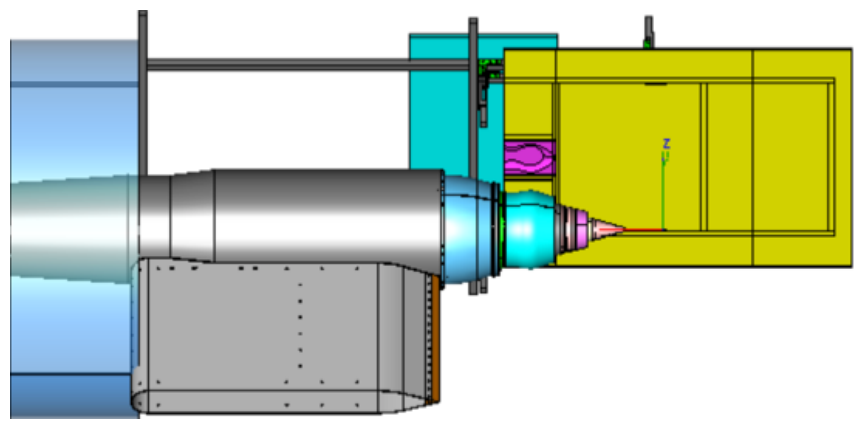

Short (0.5m) biplane surface, max overlap (190mm)

Far-field acoustic microphones and phased array

- 24-microphone polar array at ~15m radius
  - 45°—160° @ 5° increments
  - ~70 jet diameter distance
  - 120Hz – 80kHz
- 48-element phased array (OptiNav)
  - Not at the same time as far-field!
  - Nearly the same plane as far-field
  - ~2m distance, 90° polar angle
  - 200Hz – 32kHz
  - Conventional and Functional beamforming algorithms

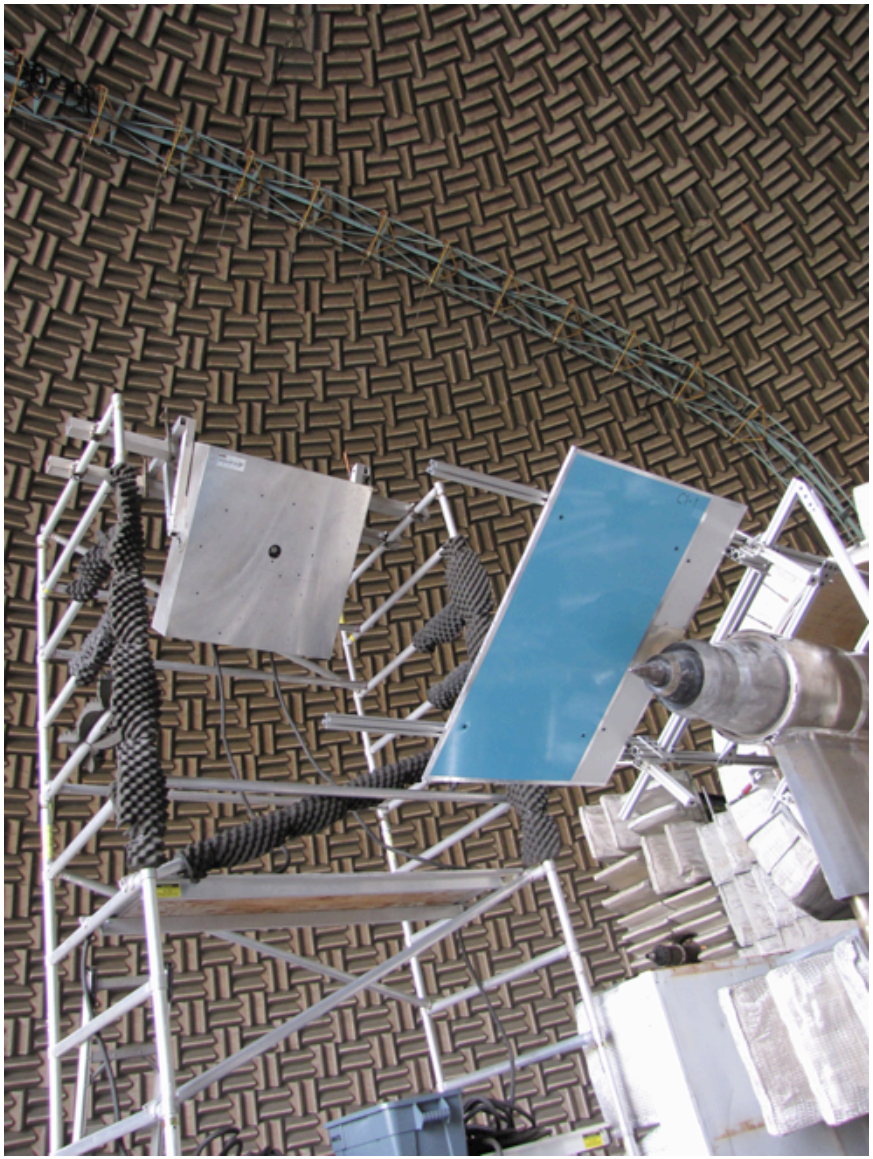

Impact of Biplane Geometry—Biplane Overlap

- Spectral directivity of far-field sound, colored by difference (in dB) in sound between **long** biplanes **with** and **without** overlap (overlap minus no overlap), at maximum standoff.
- Subsonic jet shows no difference with overlap.
- Supersonic (shock-containing) jet has significant differences in screech and broadband shock noise with biplane overlap.

M=0.98, unheated

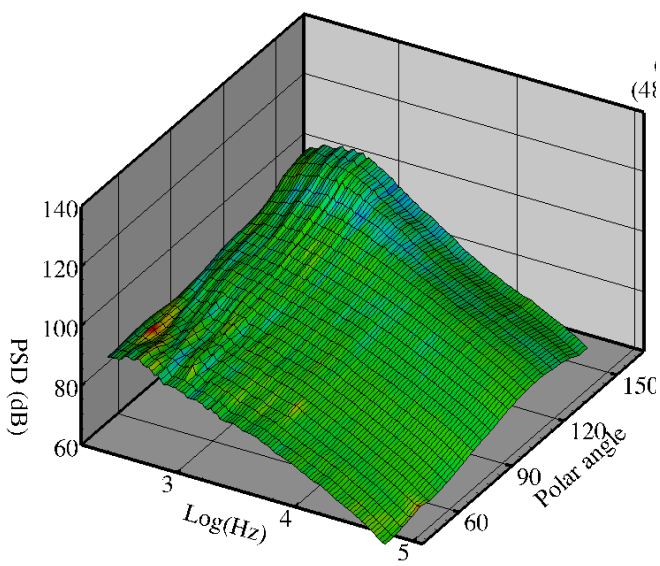

M = 1.4, unheated

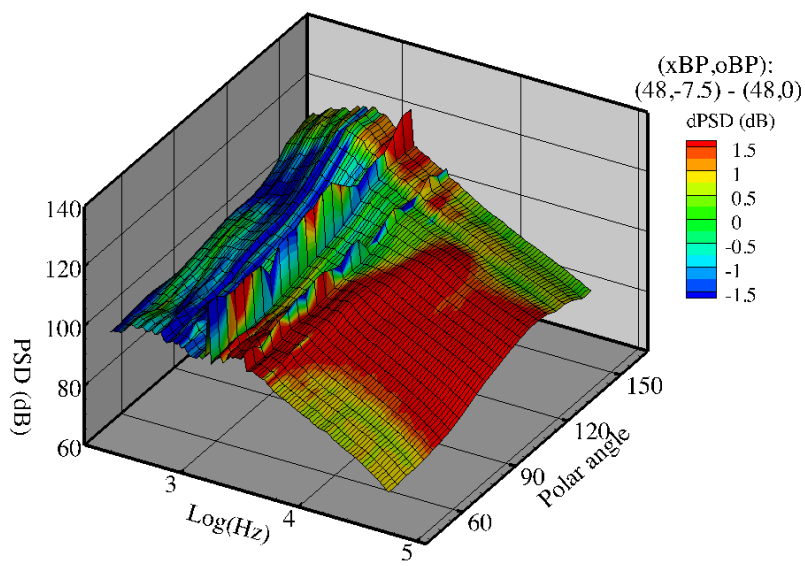

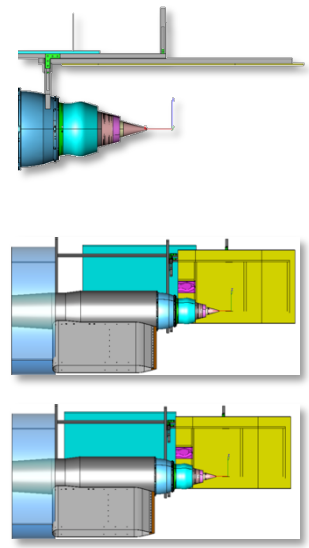

Effect of biplane on subsonic jet noise

- Spectral directivity of far-field sound, colored by difference (in dB) in sound between **long** biplane with **max** overlap and **no biplane**
  - Difference is only significant at polar angles < 55°
- Source map at frequency of maximum difference (3.3kHz) suggests noise reflecting off surface supports to be the source of discrepancy
  - Not edge diffraction!
- Acquired JSI database with long biplane with max overlap anyway.

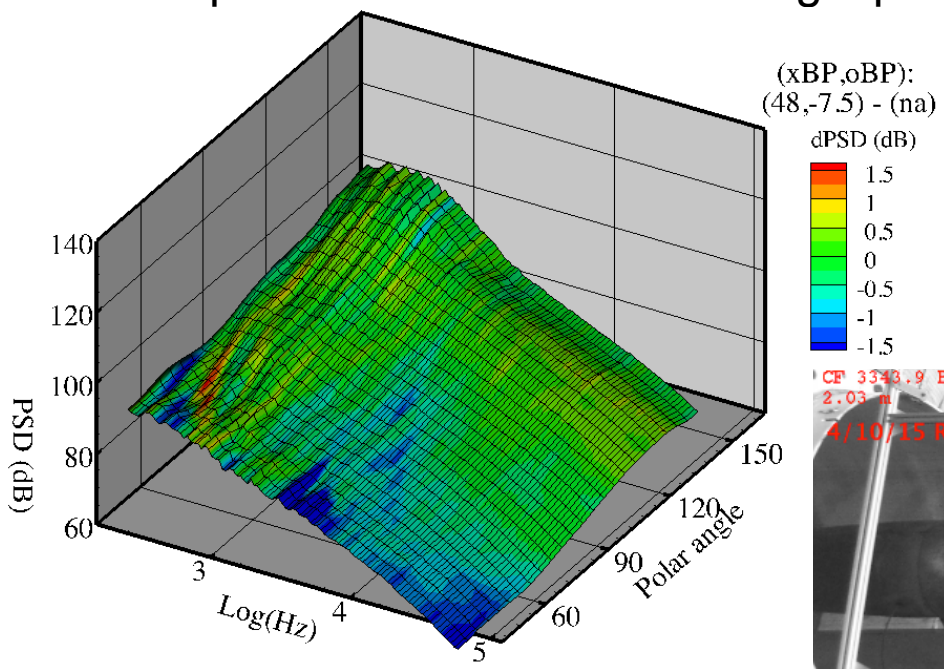

M=0.98, unheated

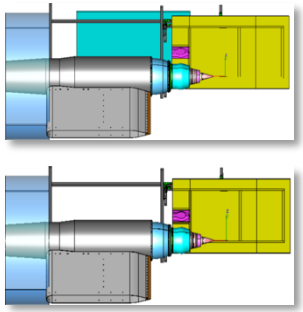

3.3kHz

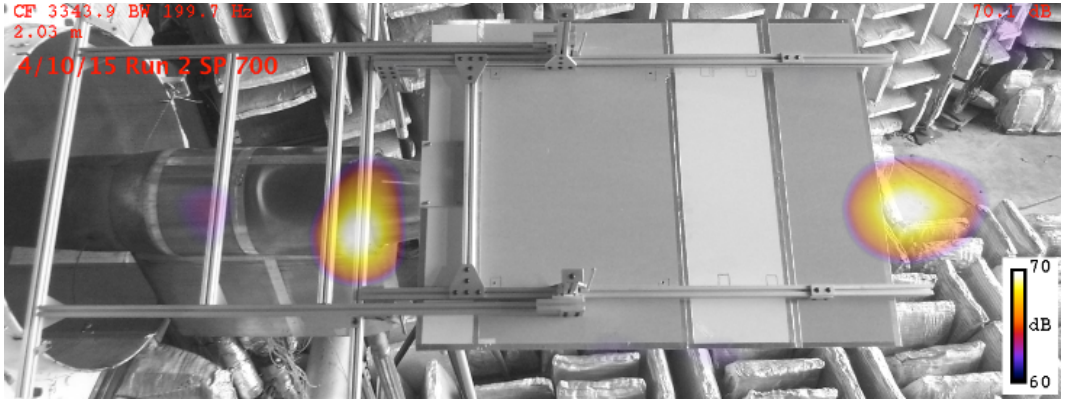

Database of dual-stream nozzles

- Examples of data acquired for dual-stream nozzle flows at various flows
- Surface length x_E/De = 2.2, standoff h_E = 0.
- Colors indicate difference in sound, **with** surface minus **without**.
- Trailing edge dipole (low frequency, 90°) dominant at low speeds.
- Significant shielding at high frequencies.
- Surprising reduction in aft angle noise; change in directivity?
- To be used in empirical modeling[1].

NPRc:	1.3	1.8	2.1
NPRb:	1.22	1.5	2.0

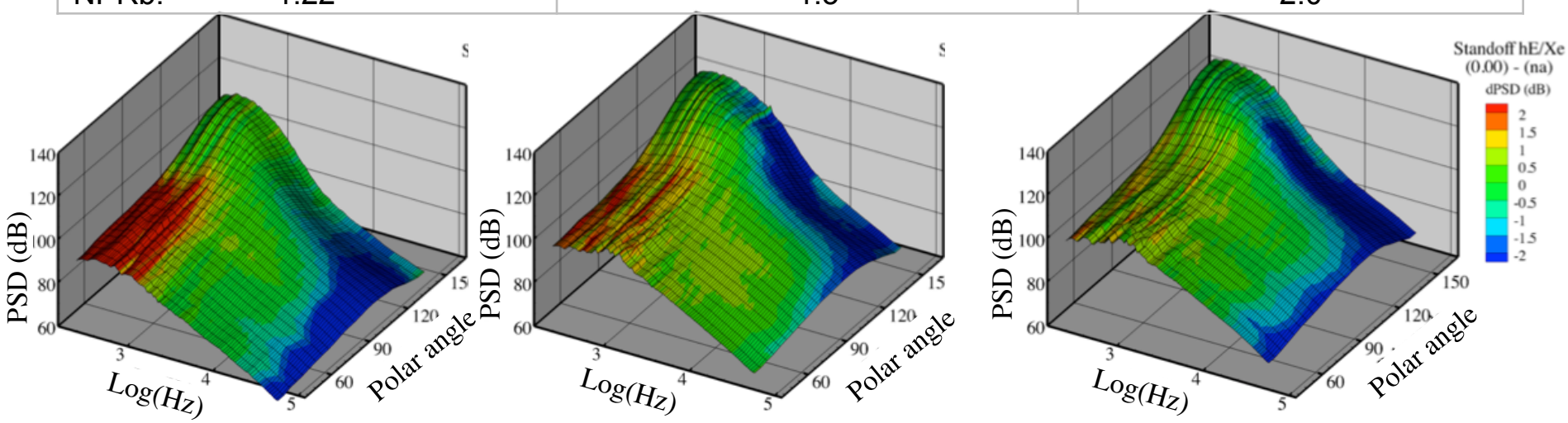

[1]Cliff Brown, et al. "Modeling Jet-Surface Interaction Noise for Separate Flow Nozzles" AIAA/CEAS 2016-xxxx.

Source distributions of dual-stream vs single-stream

- Axial location of peak source strength (as measured by phased array) vs frequency.
- Axial location normalized by calculated **potential core length** β, equivalent jet **diameter** D_e, and shifted **origin** x_0.
- Values of β, D_e, x_0 that normalize flow[1,2] do not collapse source distribution.

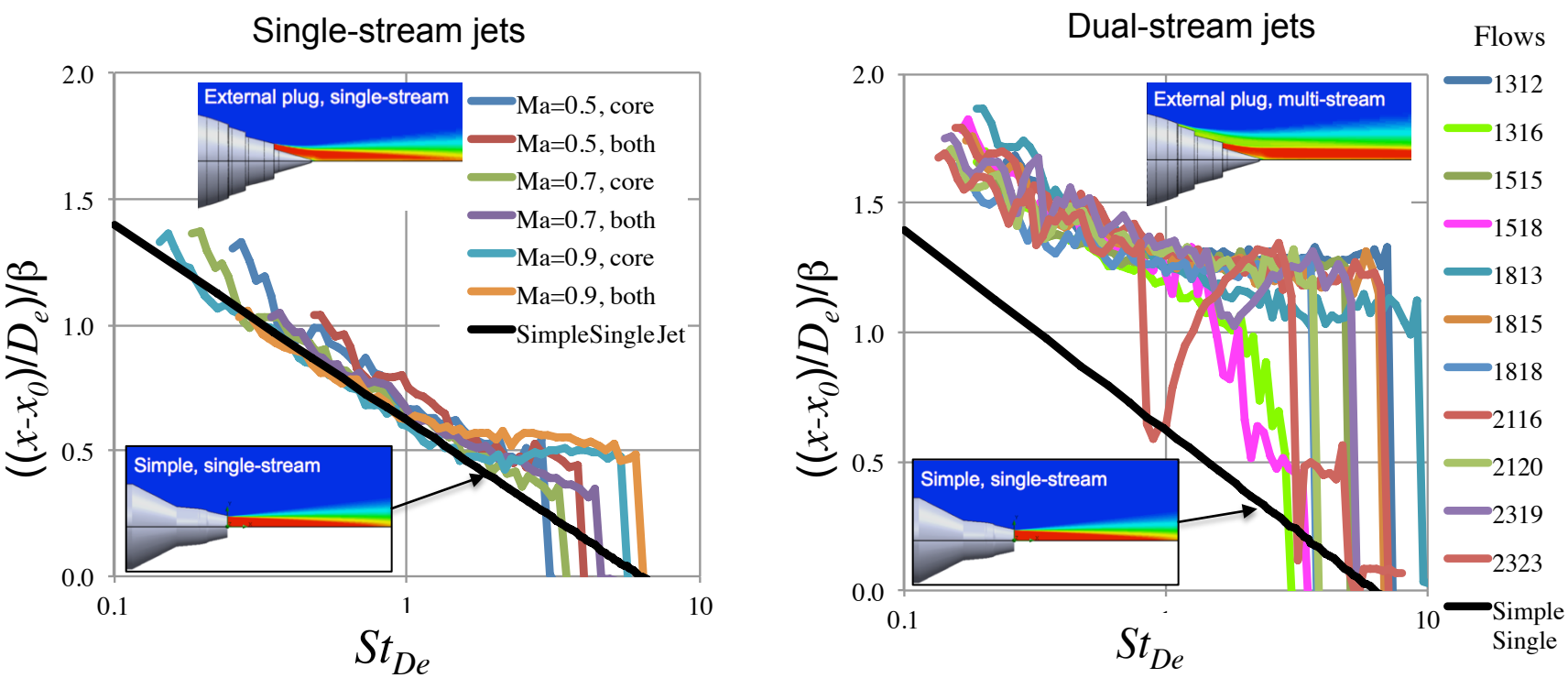

[1]Henderson, B.S. & Wernet, M.P., "Characterization of Three-Stream Jet Flow Fields", *AIAA 2016-1636*, (2016)
[2]Bridges, J, "Simple Scaling Of Multi-Stream Jet Plumes For Aeroacoustic Modeling", *AIAA 2016-1637*, (2016).

Source distributions in multi-stream jets

- Sound source maps produced by the phased array and overlaid on the array's field of view for a range of frequencies.
- Typical of all multi-stream flows examined.
- Sources roughly located at end of potential core over wide range of frequencies.
- Sudden shift to nozzle at St_{De} = 3.

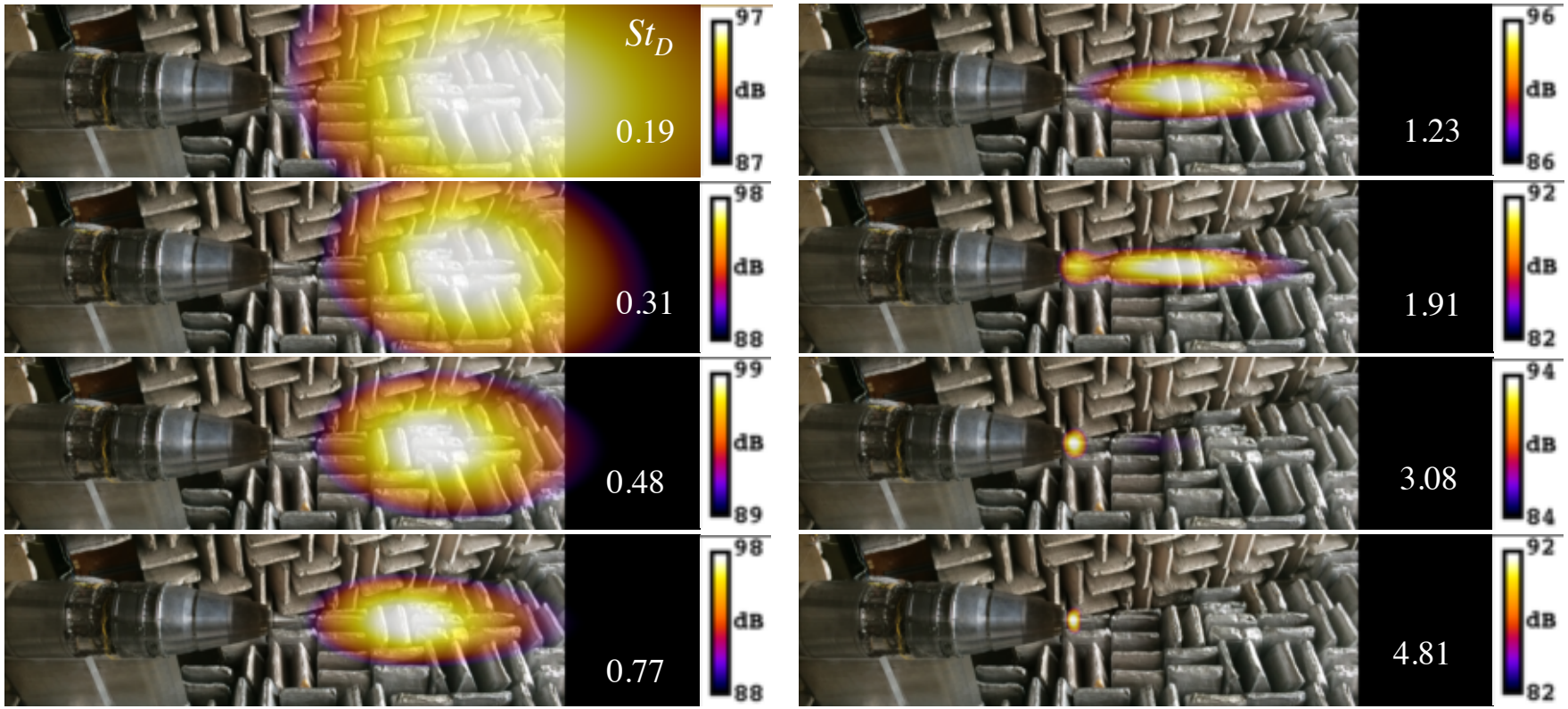

Complex geometries, azimuthal observers

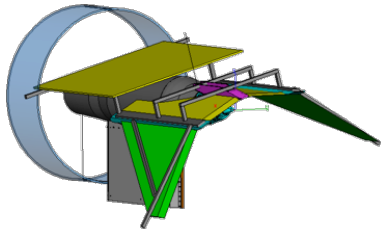

- Source distributions for center engine configuration
- 12.5kHz modelscale (~1500Hz fullscale)
- Source distribution predominantly at nozzle
- Residual sources (< 10dB of peak) aft of trailing edge (note scales)
- Exposed sources slightly higher with surface, suggests surface enhances mixing noise sources.

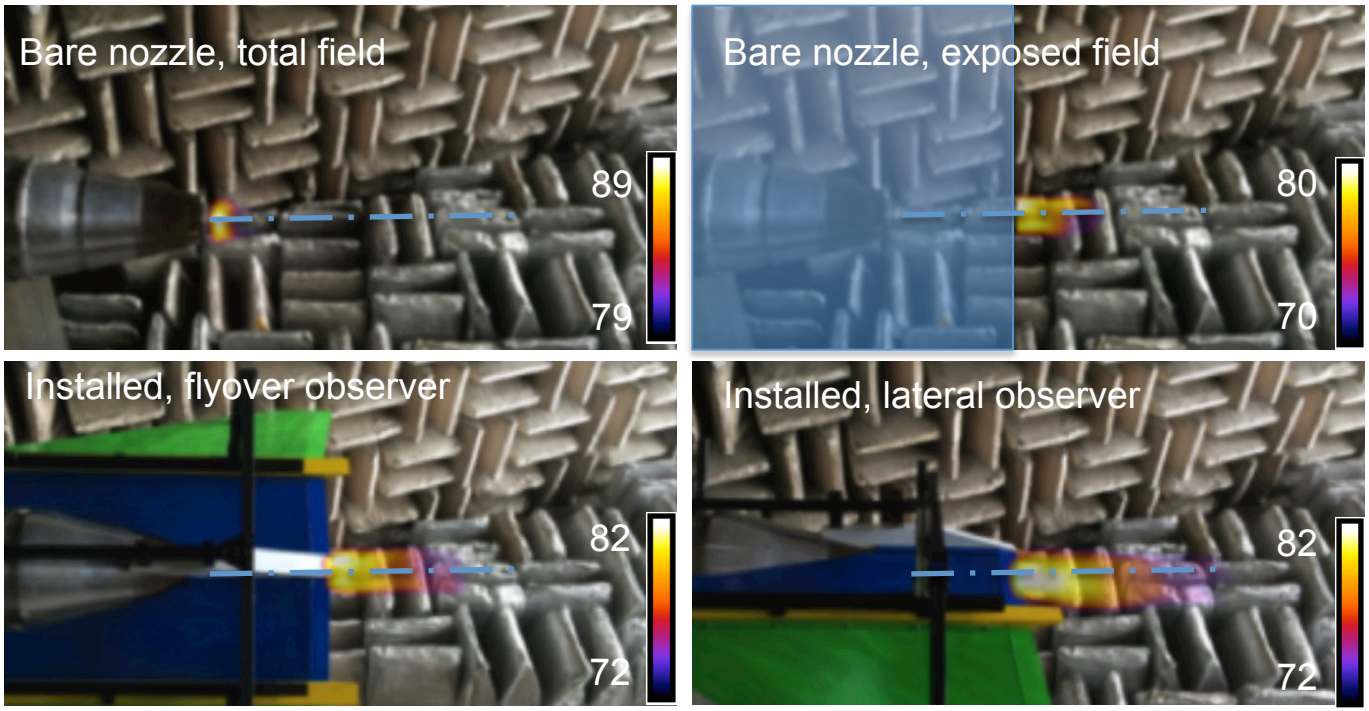

Discussion

- Phased array invaluable in determining if planform approximations are acoustically valid.
- PIV *near surfaces* will be critical in confirming that test articles are aerodynamically valid.
- Impact of surface on screeching jet very tricky, perhaps not surprising given that flow is dominated by resonance.
- Installed subsonic jets do not appear to need much upstream planform. Seems better to foreshorten surface and improve aerodynamics at nozzle. Use biplane if required.
- Finite span surfaces/ azimuthal angle variations show that line-of-sight blockage of sound source distributions explains majority of shielding observations.

Summary

- Aeroacoustic testing of installed exhaust is a new challenge.
  - Critical, given role of shielding in low-noise concept vehicles.
  - Working on what test model approximations are valid, what are incorrect.
- Biplane concept developed to extend surface upstream with minimal rig interference and flow impact. May not be critical for subsonic flows.
- Jet-Surface Interaction acoustic database extended to subsonic dual-stream nozzles with external plugs, on surfaces with finite span.
- Phased array confirmed planform coverage was adequate.
- Source distributions of dual-stream plumes different than single-stream.
- Planforms simulating conceptual aircraft were tested, will be used to confirm application of simple JSI models to realistic geometries.