CRYOGENIC THERMAL EMITTANCE MEASUREMENT ON SMALL-DIAMETER STAINLESS STEEL TUBING

A. E. Jahromi, J.G. Tuttle, and E.R. Canavan
NASA – Goddard Space Flight Center
Greenbelt, Maryland, 20771, USA

Goddard Space Flight Center

Abstract

The Mid Infrared Instrument aboard the James Webb Space Telescope includes a mechanical cryocooler which cools its detectors to their 6 K operating temperature. The refrigerant flows through several meters of ~2 mm diameter 304L stainless steel tubing, with some sections gold plated, and some not, which are exposed to their environment. An issue of water freezing onto the tube surfaces is mitigated by running a warm gas through the lines to sublimate the water. To model the effect of this process on nearby instruments, an accurate measure of the tube emittance is needed. Previously we reported the absorptance of the gold plated stainless steel tubing as a function of source temperature (i.e. its environment). In this work the thermal emittance of the uncoated tubing is measured as a function of its temperature between 100 and 300 K. These values lead to an accurate prediction of the minimum length of time required to thermally recycle the system. We report the technique and present the results.

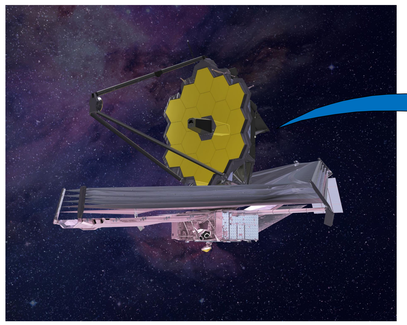

Image source : NASA

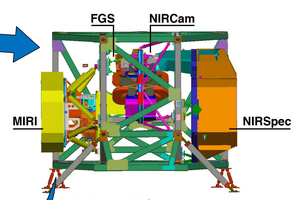

Image source : NASA

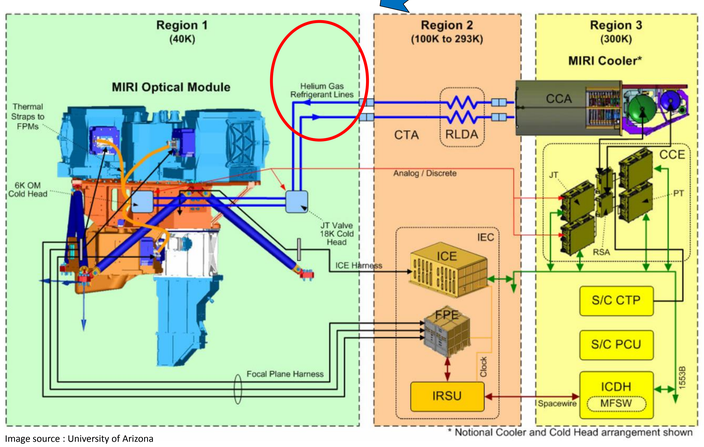

Image source : University of Arizona

Introduction

Review: MIRI includes a JT cooler to maintain detector temperatures at ~6 K

- A pulse-tube cryocooler precools helium gas to ~18 K before going through JT expansion
- The helium gas flows through sections of AISI 304L SS tubing that are either:
  - Uncoated (bare)
  - Gold plated
- Heat absorption by the gold plated sections must be minimized → Absorptance measurement conducted by Tuttle et. al. (2015)

Issue: Small amounts of water freezing onto the uncoated and gold plated tubes, resulting in increased emittance, and absorptance respectively.

Solution: If necessary MIRI cooler will need to be thermally recycled by passing warm gas (~200 K) through the affected sections in order to sublimate the frozen water from tube surfaces.

Sub-issue: Warming of uncoated sections will result in heating of well-thermally-isolated components surrounding them → the longer it takes to thermally recycle → the longer it will take to cool the surrounding components back down upon resuming normal operation → Emittance is needed to properly model the bake-out process

Solution: Experimentally measure the radiative emittance of the uncoated tube to accurately predict the minimum length of time necessary for thermal recycling.

Experimental setup

- Tube suspended inside a blackbody cavity
- Cavity is a 10 cm x 10 cm x 30 cm rectangular Aluminum box
- Interiors have Al-painted honeycombs - geometrically and optically "black".
- The tube's ID and OD are 1.96 mm, and 1.29 mm respectively.
- A small heater is bonded internal to the tube along its length
- The tube-heater sub-assembly is positioned inside a cylindrical copper "guard" → A ring of Vespel is epoxied to the annular space between the tubing and the copper sleeve.
- A shiny tape was used at the face of the guards to minimize heat leak into the sample
- Each guard was supported so that it passed through a hole in one of the box's ends, with its inner face flush with the inner extent of the painted honeycomb.

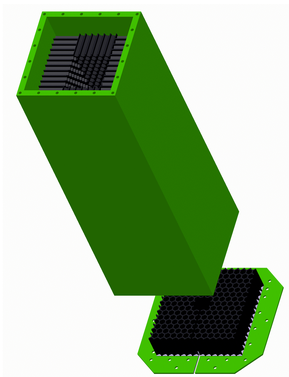

Measurement technique

- The tube's resistance was calibrated at controlled isothermal temperatures.
- The tube's measured resistance was used as a thermometer.
- Dropped the cavity temperature to a minimum value (~15 K) and measured the tube's heater power at the controlled warm resistance (temperature).
- As cavity temperature went down → sample heater power rose to compensate for the "lost radiative heat"

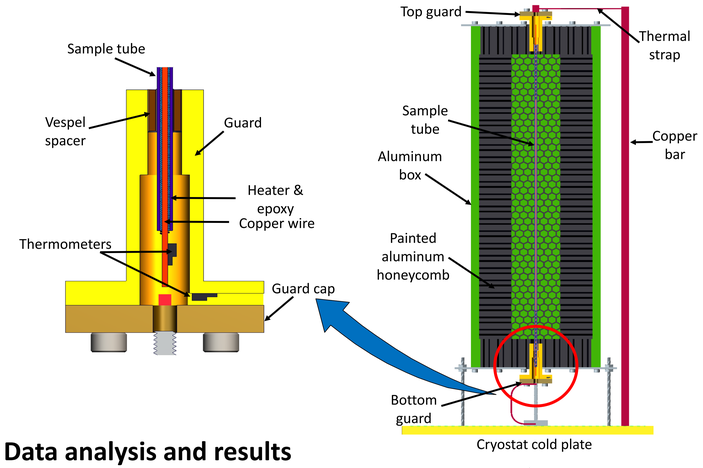

Data analysis and results

The "zero-radiation" power for each set of measurement is subtracted from the measured power → true radiative power.
(s: sample, bb:blackbody)

$$\varepsilon_{sample} = \frac{\dot{Q}_{s\to bb}}{A_s\,\sigma\left(T_s^4 - T_{bb}^4\right)}$$

Theoretical value of emissivity is found by using the measured electrical resistivity in Parker and Abbott's equation [1965].

$$\varepsilon_{th} = 0.766\sqrt{T_s\,\rho_{dc}} - \ldots \left[0.309 - 0.0889\ln\left(T_s\,\rho_{dc}\right)\right] T_s\,\rho_{dc} \ldots - 0.0175\,T_s\,\rho_{dc}\sqrt{T_s\,\rho_{dc}}$$

A geometric factor presented by Wen et. al. [2005] is used to predict theoretical value of emittance through a surface roughness matched between measurement and theory at 100 K.

$$\varepsilon_{rough\ surface} = \left[1 + \left(\frac{1}{\varepsilon_{th}} - 1\right)\chi\right]^{-1},$$

$$\chi = \left(1 + 1.25\,\pi^2\,n^2\,R_a^2\right)^{-1}$$

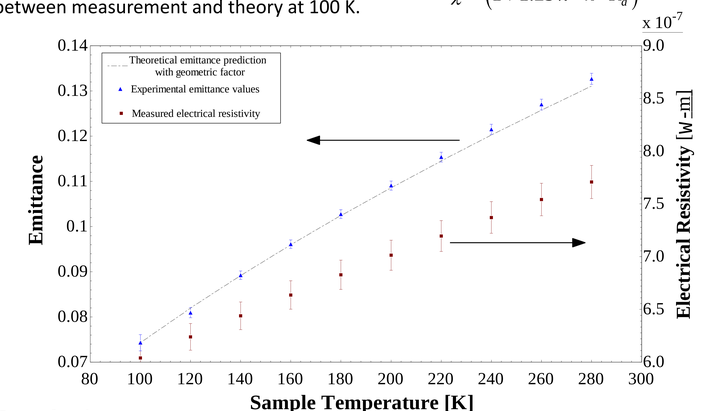

Conclusion:

The geometrically-adjusted theoretical and experimental values for emittance of the uncoated stainless steel tube agree to within ~1 %.