https://ntrs.nasa.gov/search.jsp?R=20170007829 2020-05-09T10:05:38+00:00Z

Novel High Temperature Capacitive Pressure Sensor Utilizing SiC Integrated Circuit Twin Ring Oscillators

M. Scardelletti, P. Neudeck,
D. Spry, R. Meredith, J. Jordan, N. Prokop,
M. Krasowski, G. Beheim and G. Hunter
NASA Glenn Research Center

ECTC 2017
The 67th Electronic Components and Technology Conference

Introduction

- Exploration of planets and other celestial bodies is essential in order to determine the origins and future environmental conditions on Earth.
- Venus (our sister planet) especially noteworthy due similarities to Earth (size and make-up)
- But the two planets evolved very differently
  - Venus lacks oceans
  - Thick CO_2 atmosphere
  - Surface temperature 470°C and pressure 1350 psi
  - Very caustic containing enough SO_2 to form large sulfuric acid clouds tens kilometers thick in the upper atmosphere

Introduction

However Venus may have had shallow liquid-water oceans and habitable surface temperatures for up to 2 billion years in its early history……. What happened??????

Fundamental questions about the nature of Venus remain shrouded due to:

- The huge challenge of returning useful scientific data from this hostile surface environment
- Only possible to return more than two hours of meteorological and seismic observational data from landers with current electronics and sensors

Introduction

Electronics and sensors designed for harsh environments

- Wide bandgap semiconductors
- 4-H SiC JFET integrated circuits
- GEER (Glenn Extreme Environments Rig) Chamber
- Three weeks of operation in Venus-like conditions
- The Long-Life In-situ Solar System Explorer (LLISSE) project at NASA Glenn Research Center

Introduction

The presentation will describe the initial development of a high temperature capacitive pressure sensor system for the surface of Venus

- SiC IC twin ring oscillators and SiCN capacitive pressure sensor
- Keysight's Advanced Design System circuit simulator
- 25 to 500°C and 0 to 300 psi operation
- Measured with and without sensor to demonstrate the effects of the sensor
- The sensor system illustrates the initial Earth-like condition testing as a step to long periods of time on the surface of Venus

11-Stage Ring Oscillator Design

- NOT logic gate stage
  - 2 JFET (Models for 25 and 500°C)
  - 3 resistors (Models for 25 and 500°C)
  - 1 capacitor (parasitic effects)

- 11-satge ring oscillator
  - 11 NOT logic gates placed in a series feedback ring
  - Two Not gate buffers for output signal

- Capacitive pressure sensor
  - Pressure sensor is connected to one node of the feedback loop and to ground (modeled as capacitor)

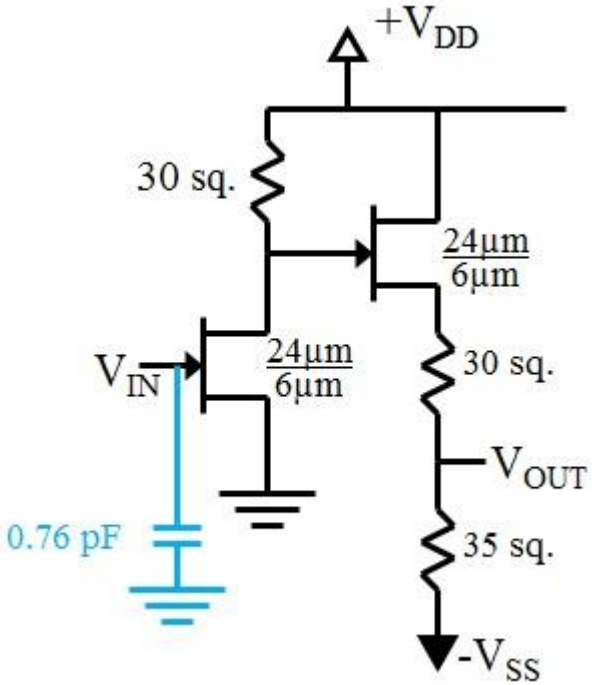

Single stage NOT Gate schematic

11-Stage Ring Oscillator Design

11-stage ring oscillator with buffer gates and capacitor pressure sensor

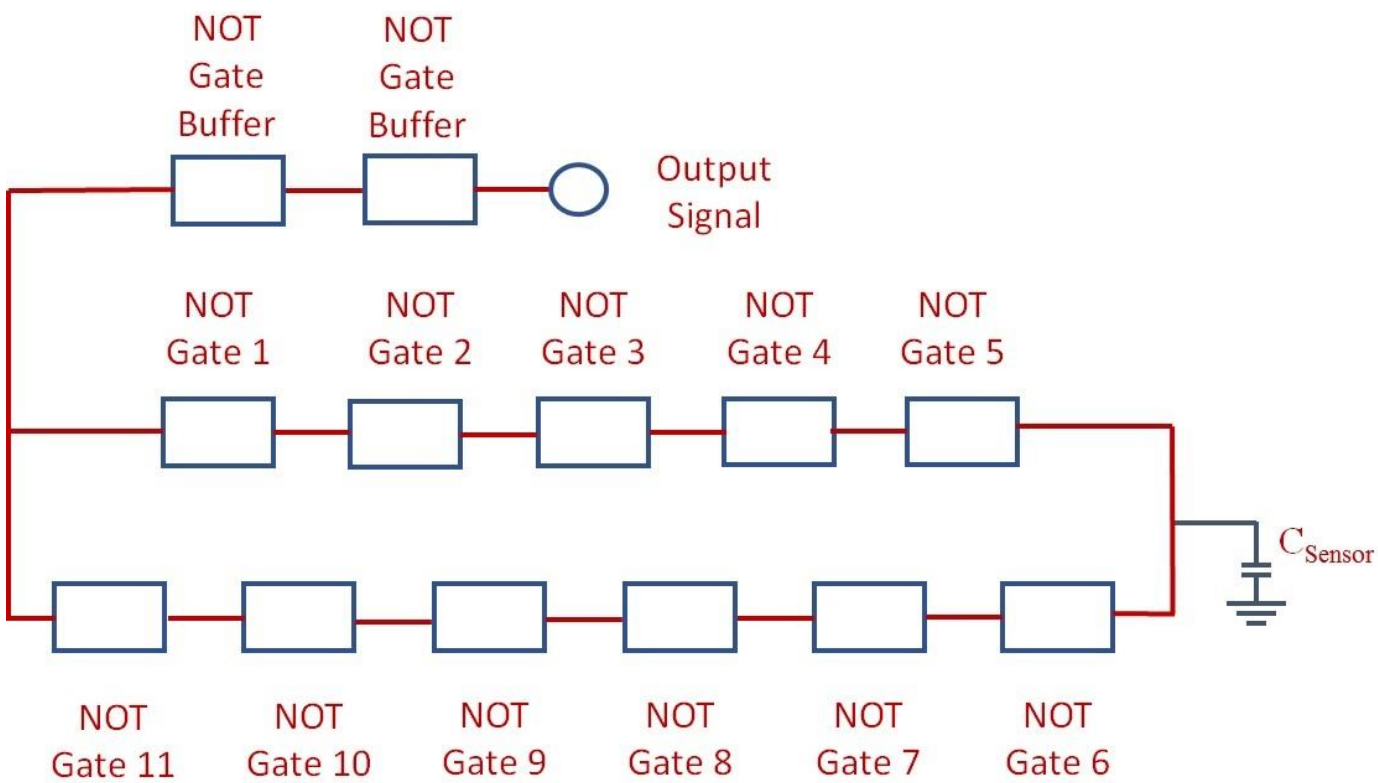

Simulations

Simulations performed in Keysight's Advanced Design System (ADS) Software Circuit Simulator

- JFET models parameters extracted from material and circuit evaluation
- Models for 25, 300 and 500°C developed
- IV-curves simulations
- Harmonic Balance simulations
- Transient Analysis

Simulations

Harmonic Balance simulations of 11-stage ring oscillator with NO sensor at 25 and 500°C

500°C simulated results

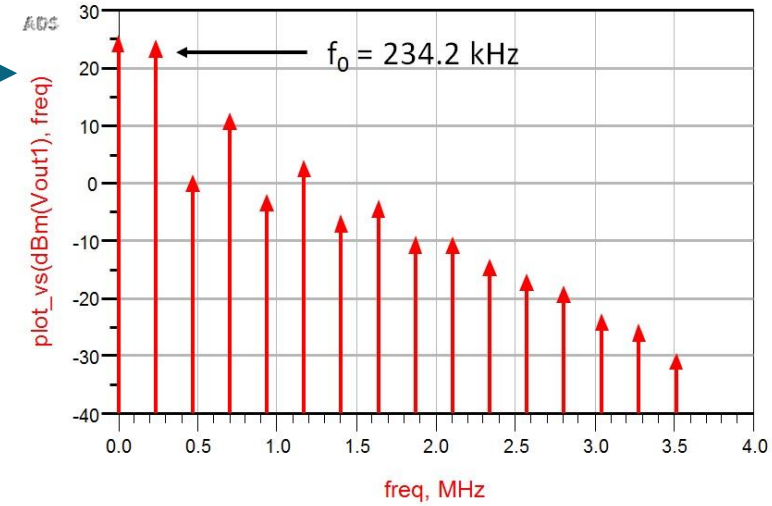

25°C simulated results

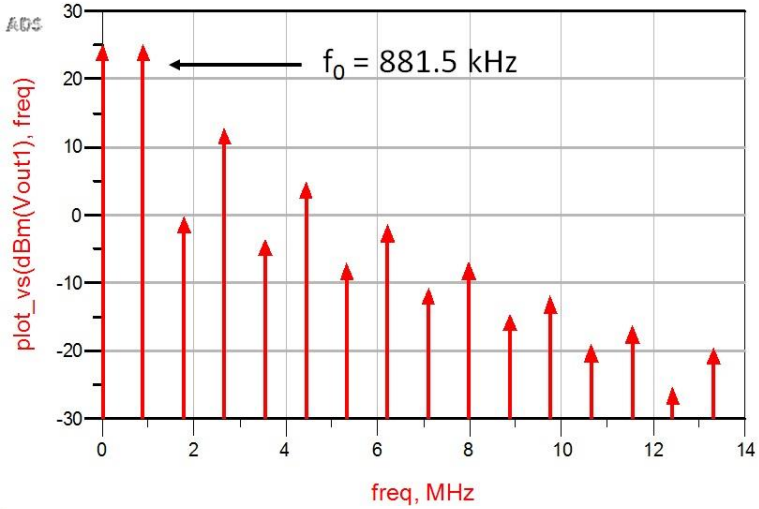

The resonate frequency decreases from 881.5 kHz at 25°C to 234.2 kHz at 500°C, which is a reduction of 647.3 kHz or 73.4% from 25 to 500°C

Simulations

Transient Analyses simulations of 11-stage ring oscillator with NO sensor at 25 and 500°C

500°C simulated results

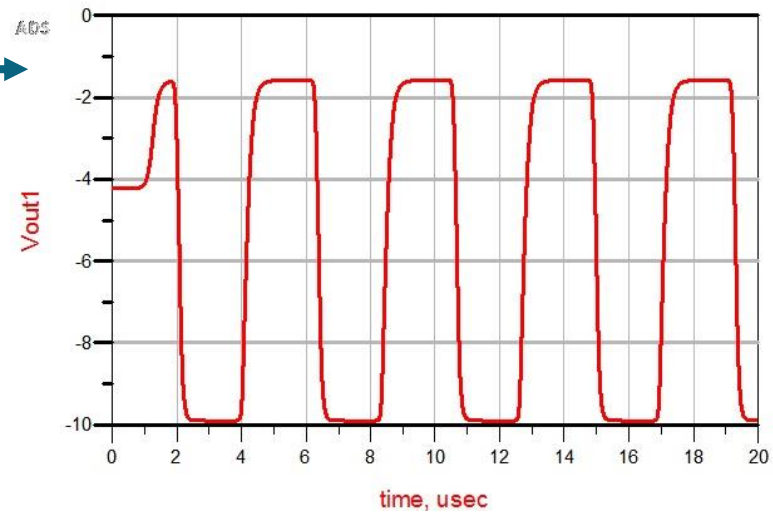

25°C simulated results

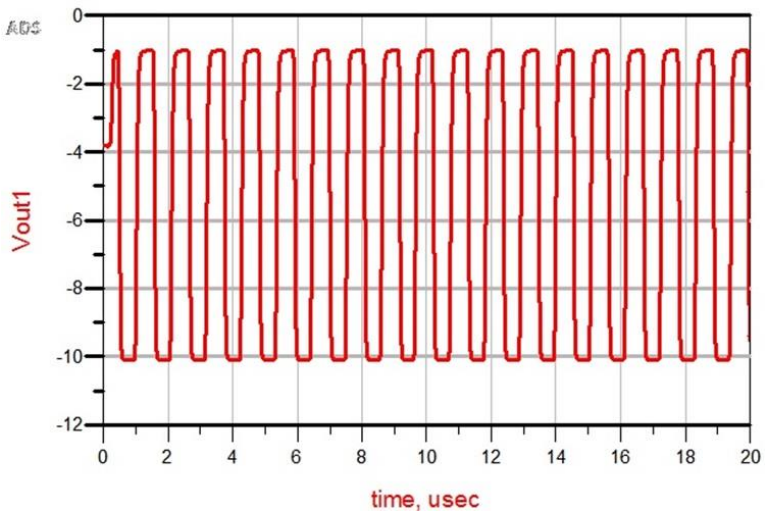

Transient simulated behavior illustrates same reduction in frequency from 25 to 500°C as expected

Fabricated 11-stage ring oscillator

Fabricated 4-H SiC integrated circuit technology developed at NASA GRC exhibiting thousands of hours at 500°C in Earth-like conditions and over 500 hours Venus-like conditions

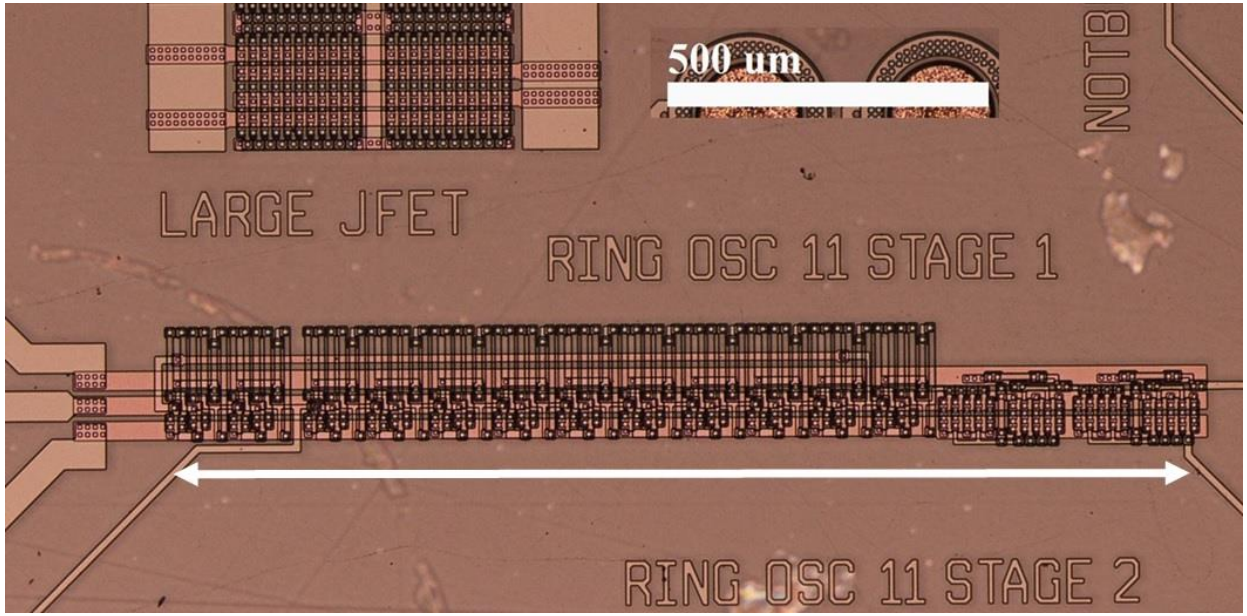

Capacitive Pressure Sensor

Capacitive pressure sensor developed by Sporian Microsystems

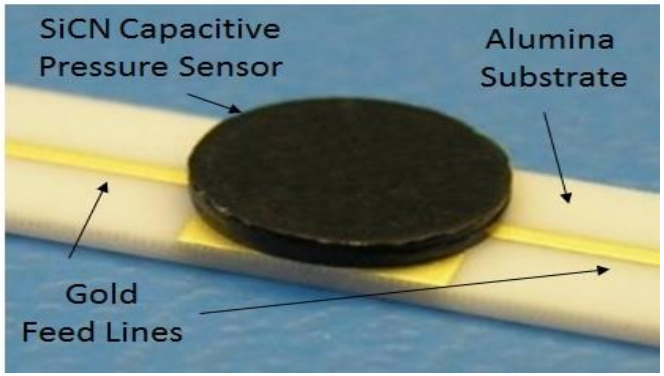

- Parallel plate capacitor design
- SICN membrane
- Superior oxidation/corrosion resistance at temperatures up to 1500°C
- One electrode of the capacitive sensor is fabricated on the deflecting membrane that forms a sealed cavity and the second electrode to the gold lead on the alumina substrate
- As pressure increases the capacitance of the sensor decreases

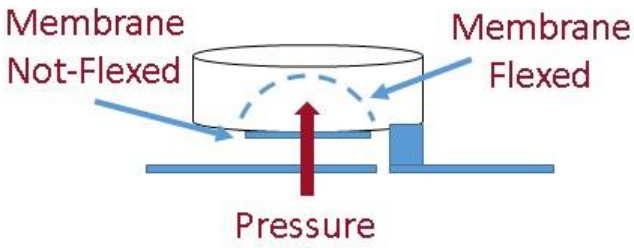

Capacitive Pressure Sensor

- Characterized from 0 to 300 psi at 25°C in steps of 50 psi with an Agilent 1500A Semiconductor Device Analyzer and customized pressure test fixture
- Custom built standards used to ensure accuracy
- At 0 psi the sensor has an initial capacitance of 3.76 pF and reduces to 1.75 pF at 300 psi
- Sensor sensitivity of 6.67 fF/psi across pressure range

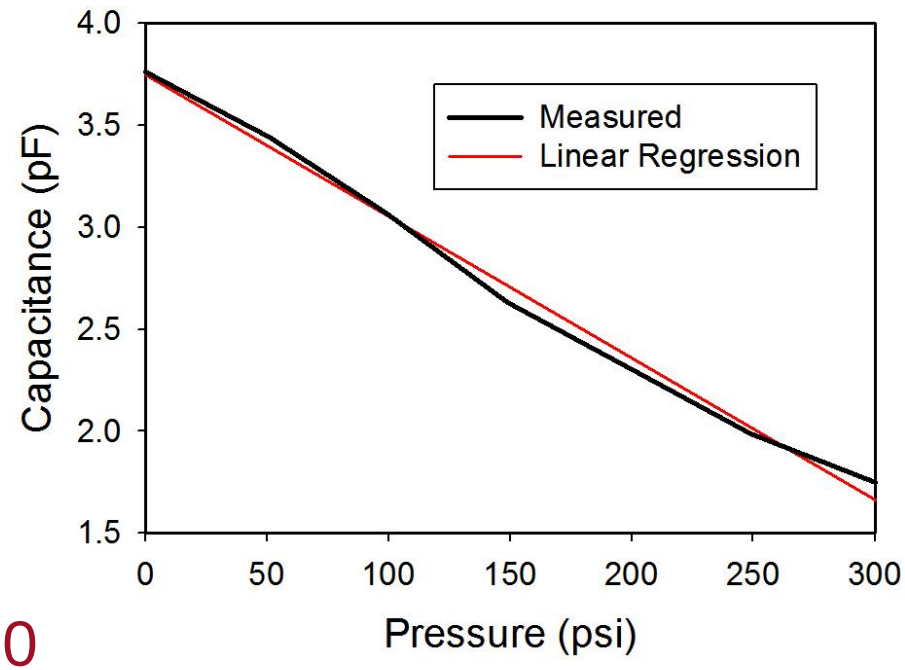

Sensor is extremely linear from 0 to 300 psi

Correlation coefficient "r^2" was 0.999

Pressure Sensor System

The pressure sensor system consisted of two 11-stage ring oscillators and SiCN pressure sensor

- Osc1 has the sensor connected to a node in the feedback loop and then to ground
- Osc2 left unbounded
- Osc1 varies as a function of both pressure and temperature and Osc2 provides a pressure-independent reference frequency which can be used to temperature compensate Osc1

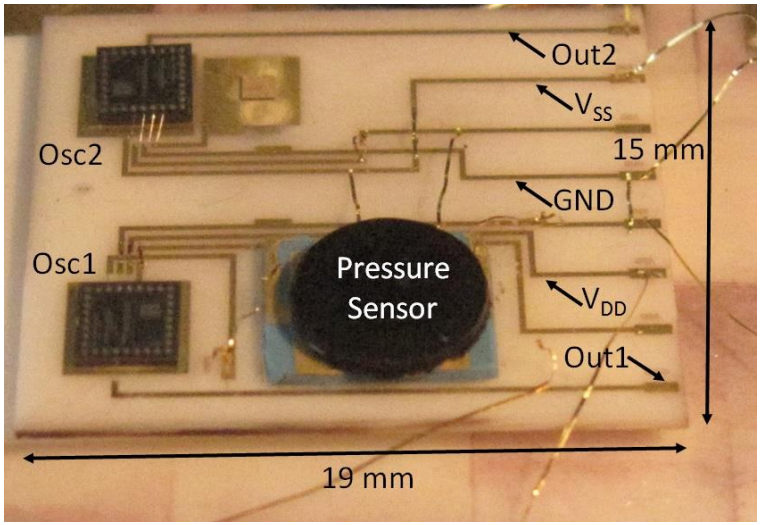

Pressure Sensor System

Pressure sensor system characterization

- Two Agilent E4440A spectrum analyzers (where each analyzer is dedicated to one oscillator output)
- DC power supply
- Computer with LabVIEW program for data acquisition
- Custom built high temperature pressure test fixture

Ring Oscillator Reliability

- Oscillators initially tested in an oven up to 500°C prior to connecting the pressure sensor to Osc1
- LabVIEW program recorded the f_0 and corresponding magnitude for Osc1 and Osc2 as a function of temperature and time
- The temperature was ramped up 3°C/min to 500°C were the temperature dwelled for 5 hours and then ramped back down 3°C/min to room temperature
- During test V_{DD} was set to +25V and V_{SS} was set to -25V, and both supply voltages remained constant throughout the test
- The test was repeated the following day to study the reliability and consistency of the devices

Ring Oscillator Reliability

	Day1	Day1	Day2	Day2
	25C	500C	25C	500C
Osc1	893.5 kHz	204.6 kHz	901.1 kHz	206.4 kHz
Osc2	956.1 kHz	216.3 kHz	963.9 kHz	218.3 kHz

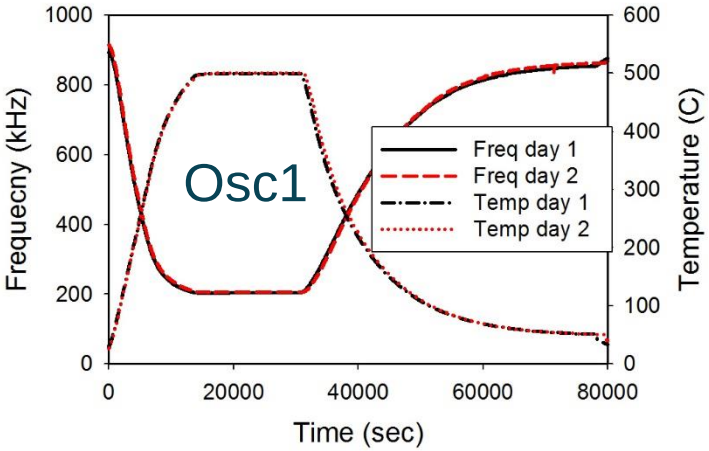

- Osc1 f_0 changed 77.1 and 77.2% from 25 to 500°C on Day1 and Day2, respectively
- Osc2 f_0 changed 77.4 and 77.3% from 25 to 500°C on Day1 and Day2, respectively

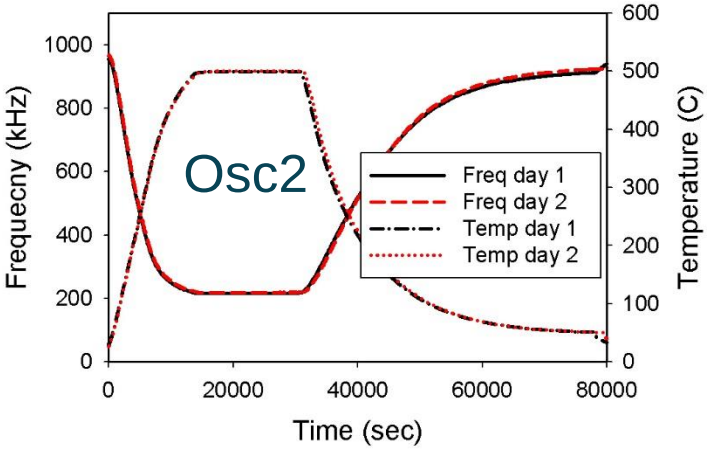

Note: Even though Osc1 and Osc2 are identical in layout and fab, their electrical performance differs slightly due to location on wafer

Ring Oscillator Reliability

	Day1	Day1	Day2	Day2
	25C	500C	25C	500C
Osc1	-32.6 dBm	-28.3 dBm	-29.8 dBm	-28.1 dBm
Osc2	-27.8 dBm	-28.4 dBm	-27.7 dBm	-29.3 dBm

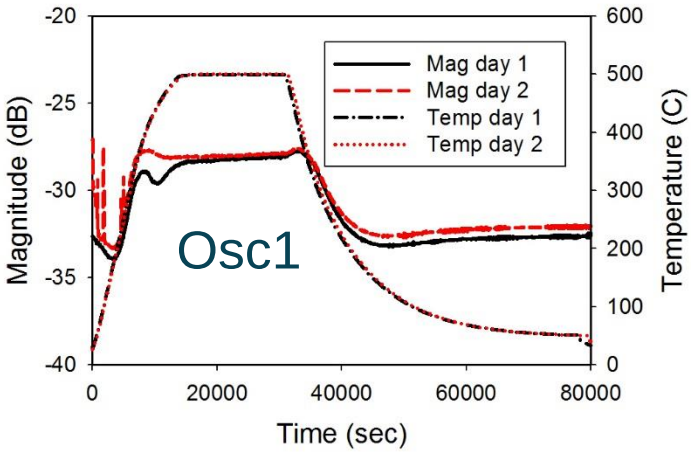

The initial decrease in amplitude is due to the increase output resistance as the temperature increases. However as the frequency decreases the amplitude increases and becomes the predominant factor.

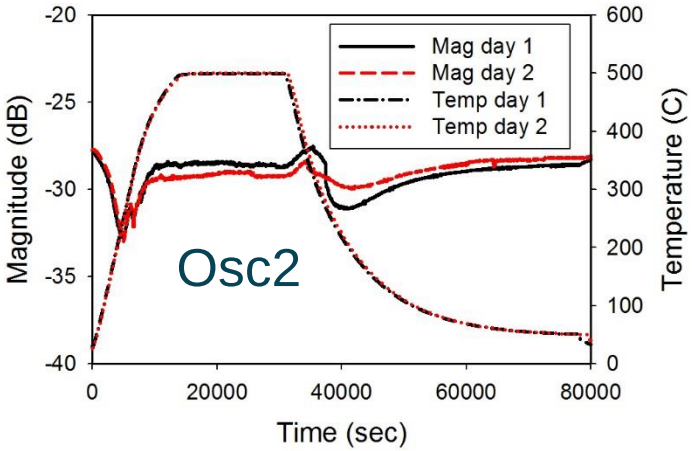

Sensor System Characterization

- Measured from 25 to 500°C from 0 to 300 psi in steps of 50 psi
- Custom built high temperature/pressure test fixture
- LabVIEW program recorded the f_0 and corresponding magnitude for Osc1 and Osc2 as a function of temperature and pressure
- During test V_{DD} was set to +25V and V_{SS} was set to -25V, and both supply voltages remained constant throughout the test
- Thermocouple placed directly under DUT to facilitate accurate temperature reading

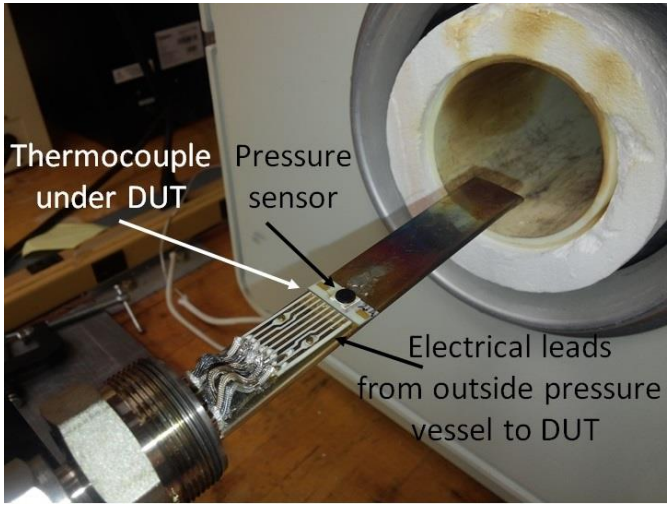

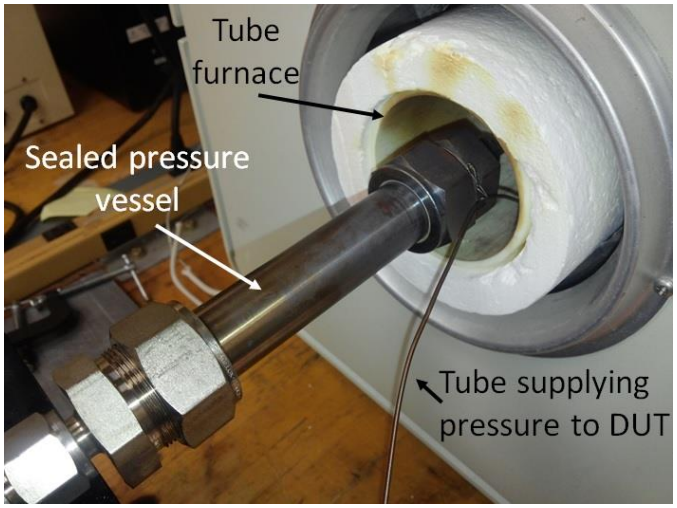

Senor System Characterization

The measured oscillation frequencies for Osc1 (with sensor for pressures of 0 and 300 psi and without sensor) and Osc2 from 25 to 500°C

- Oscillation frequencies decrease with increasing T due to decrease SiC JFET and resistor current conduction
- Osc1 without sensor falls just below Osc1 with sensor for T>350°C, believed to be due to unaccounted parasitics from pressure sensor at high temperature

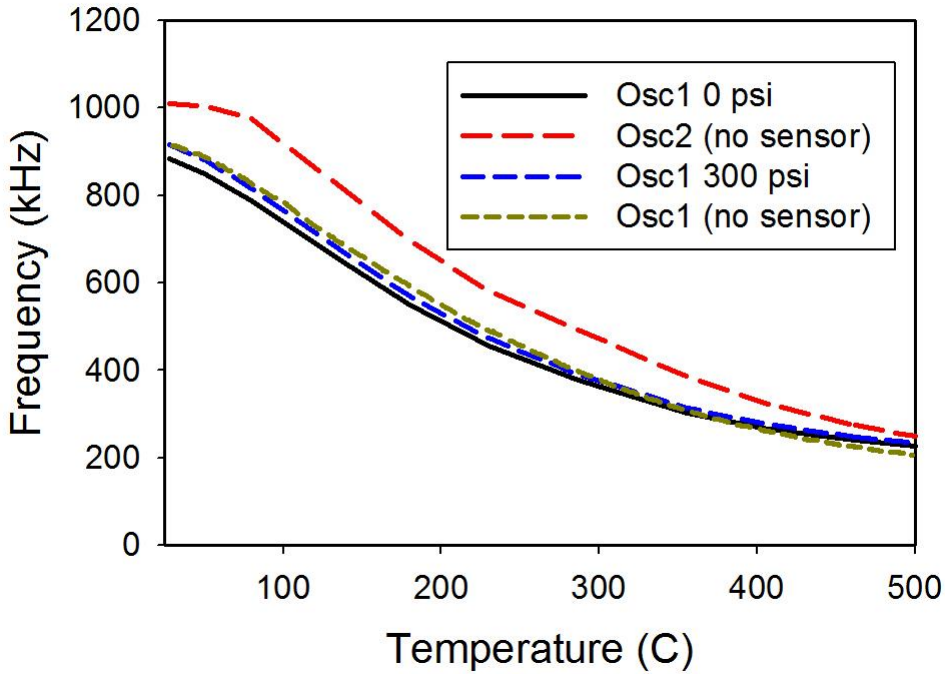

Sensor System Characterization

Measured response Osc1 as a function of temperature and pressure

- The Δf_0 ($f_{300psi} - f_{0psi}$) decreases as the temperature increases
- The % Change remains relatively the same with minor fluctuations which is due to the a non-optimal ±2°C fluctuation in furnace temperature
- The Rate of Change decreases as temperature increases due to the decreasing Δf_0 over the consistent pressure range of 0 to 300 psi

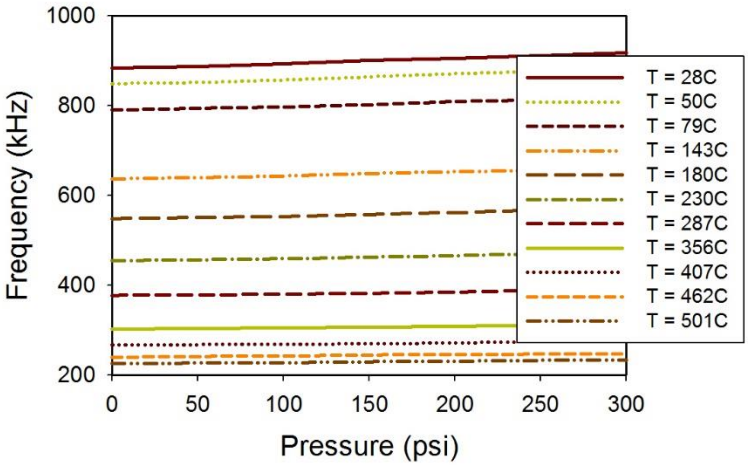

Temp (°C)	Δf_0 (kHz)	% Change 0-300psi	Rate of Change kHz/psi
28	34	3.85	0.113
50	32	3.78	0.107
79	28	3.54	0.093
143	21	3.30	0.070
180	21	3.83	0.070
230	18	3.96	0.060
287	13	3.44	0.043
356	11	3.63	0.037
407	9	3.37	0.030
462	8	3.33	0.027
501	8	3.54	0.026

Sensor System Characterization

Measured response of the sensor with temperature compensation

- The fundamental frequency, f_0, of Osc2 minus Osc1 from 0 to 300 psi over the temperature range of 25 to 500°C decreases as pressure increases.
- Subtracting Osc1 from Osc2 effectively removes the temperature dependence with respect to pressure changes leaving only the pressure change as a function of frequency.

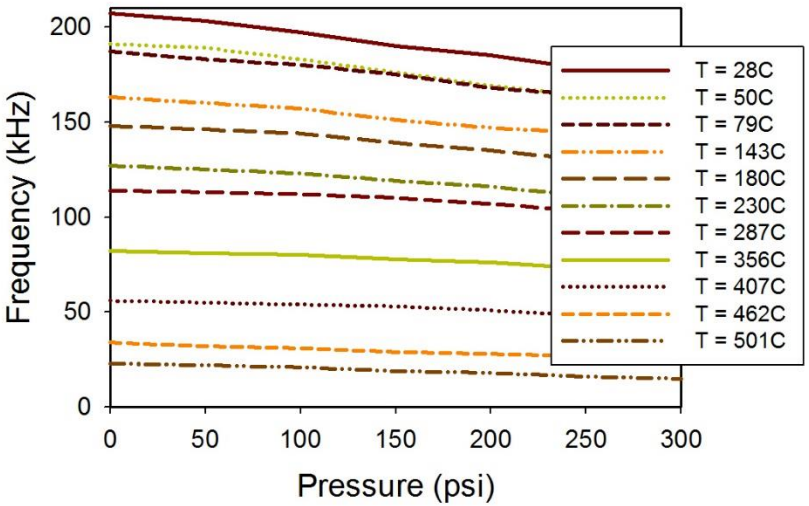

f_{02} minus $f_{01\ (0\ to\ 300pis)}$ removes temperature dependency of the sensing system

Summary

- Demonstrated a Novel pressure sensing system utilizing a SiCN capacitive pressure sensor and twin SiC IC ring oscillators over a temperature range of 25 to 500°C from 0 to 300 psi
- 1st order spice model were used to design the sensor with very good accuracy as a function of temperature
- Demonstrated the reliability and consistency of the ring oscillators
- The % Change of the sensing system remained relatively the same with minor fluctuations which is due to the a non-optimal ±2°C fluctuation in furnace temperature
- The Rate of Change of the sensing system decreased as temperature increased and is due to the decreasing Δf_0 over the consistent pressure range of 0 to 300 psi
- The temperature dependency of the sensing system can effectively be removed by subtracting Osc2 (f_0) from Osc1(f_0)
- This is the initial design of a pressure sensing system that will detect the change in pressure on the surface of Venus

Acknowledgements

NASA Glenn Research Center

Elizabeth Mcquaid, Nick Varaljay and Liang-Yu Chen

Long-Life In-Situ Solar System Explorer (LLISSE) and Transformative Tools and Technologies projects

Sporian Microsystems

Keven Harsh, Evan Pilant and Mike Usrey

Thank you