https://ntrs.nasa.gov/search.jsp?R=20180002166 2018-07-24T05:41:49+00:00Z

Implementation of a Space Communications Cognitive Engine

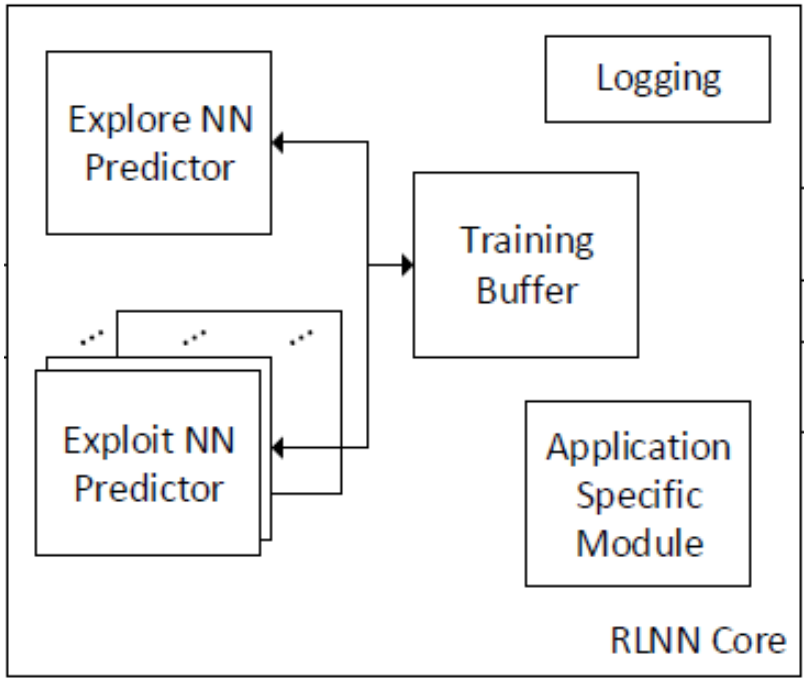

Timothy M. Hackett, *PSU*
Sven G. Bilén, *PSU*
Paulo Victor R. Ferreira, *WPI*
Alexander M. Wyglinski, *WPI*
Richard C. Reinhart, *NASA GRC*

28 June 2017

PennState

This work was sponsored under by a NASA Space Technology Research Fellowship (grant number NNX15AQ41H) and a cooperative agreement with NASA John H. Glenn Research Center (grant number NNC14AA01A).

Overview of Research

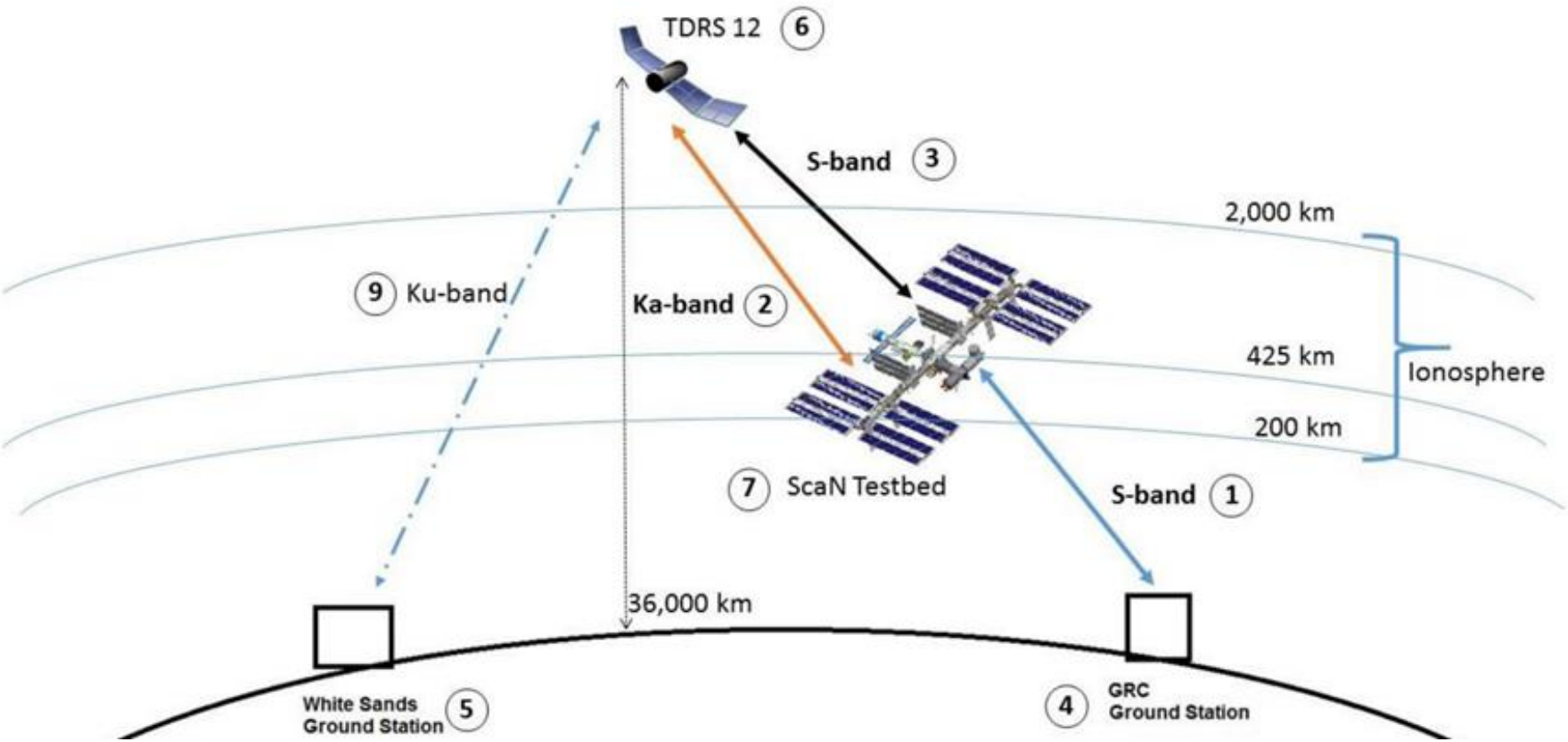

PennState

High Level Algorithm Block Diagram

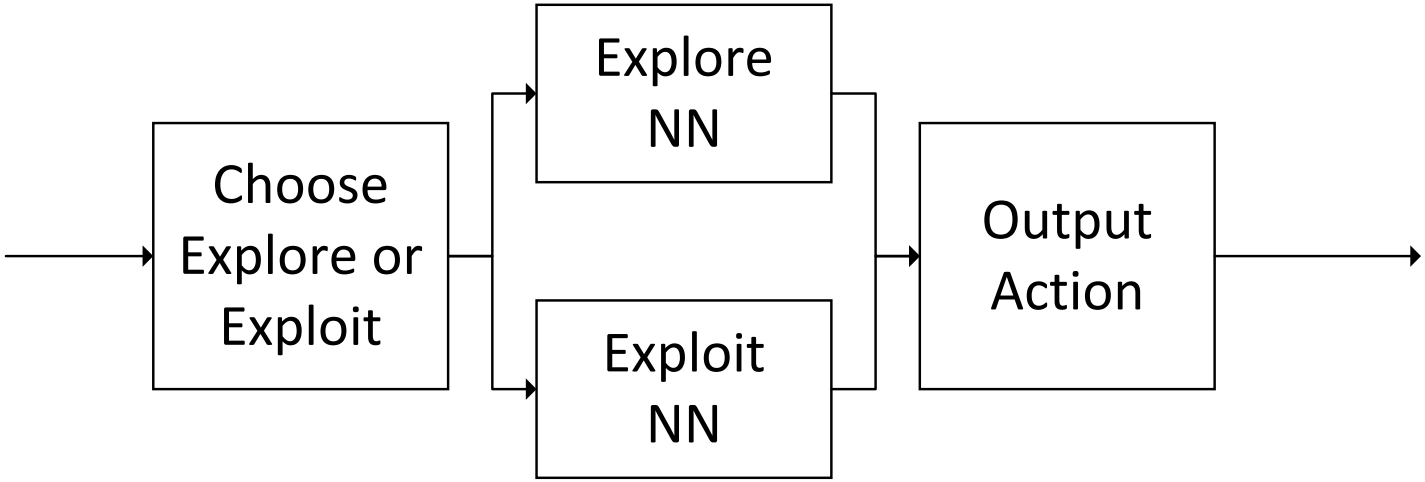

Multi-Objective Values:

Throughput
Bit/Frame/Packet Error Rate
Target Bandwidth
Spectral Efficiency
TX Power Efficiency
DC Power Consumption

PennState

Ferreria, R. et al., *IEEE Journal on Selected Areas in Communications*, 2017 (submitted)

Full System Architecture

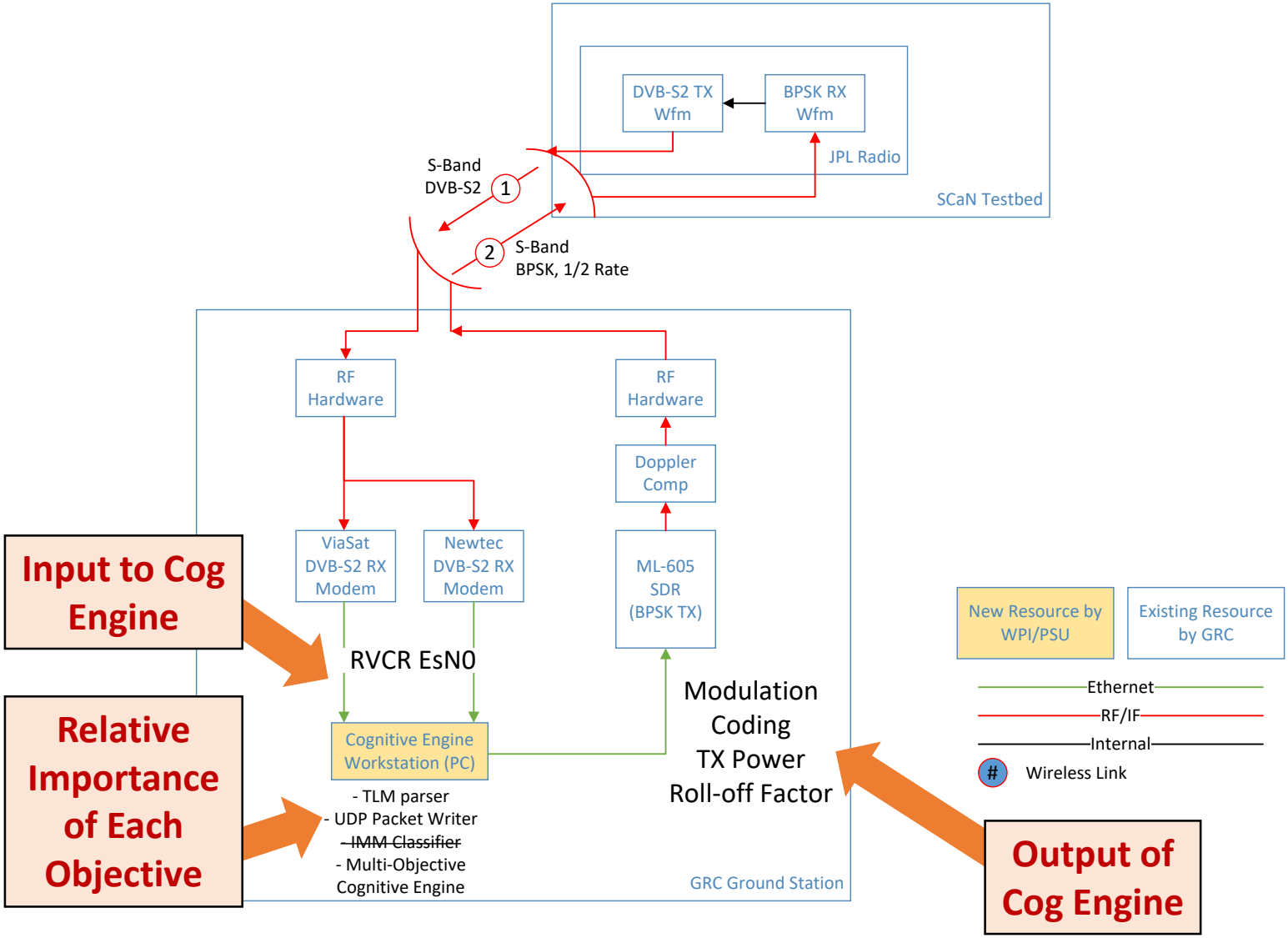

PennState

Software Libraries

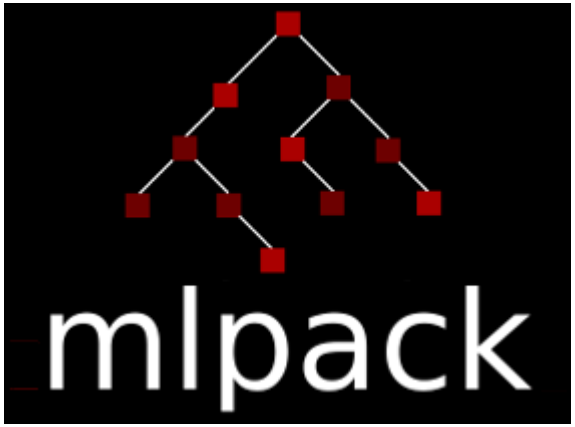

Curtin, R. et al., *Journal of Machine Learning Research*, 2013

Boost.ASIO: C. Kohlhoff, *boost.org*, 2016
Boost.Serialization: R. Ramsey, *boost.org, 2004*

Armadillo
C++ linear algebra library

Curtin, R. et al., *arma.sourceforge.net*, 2013

Timing Trade Study

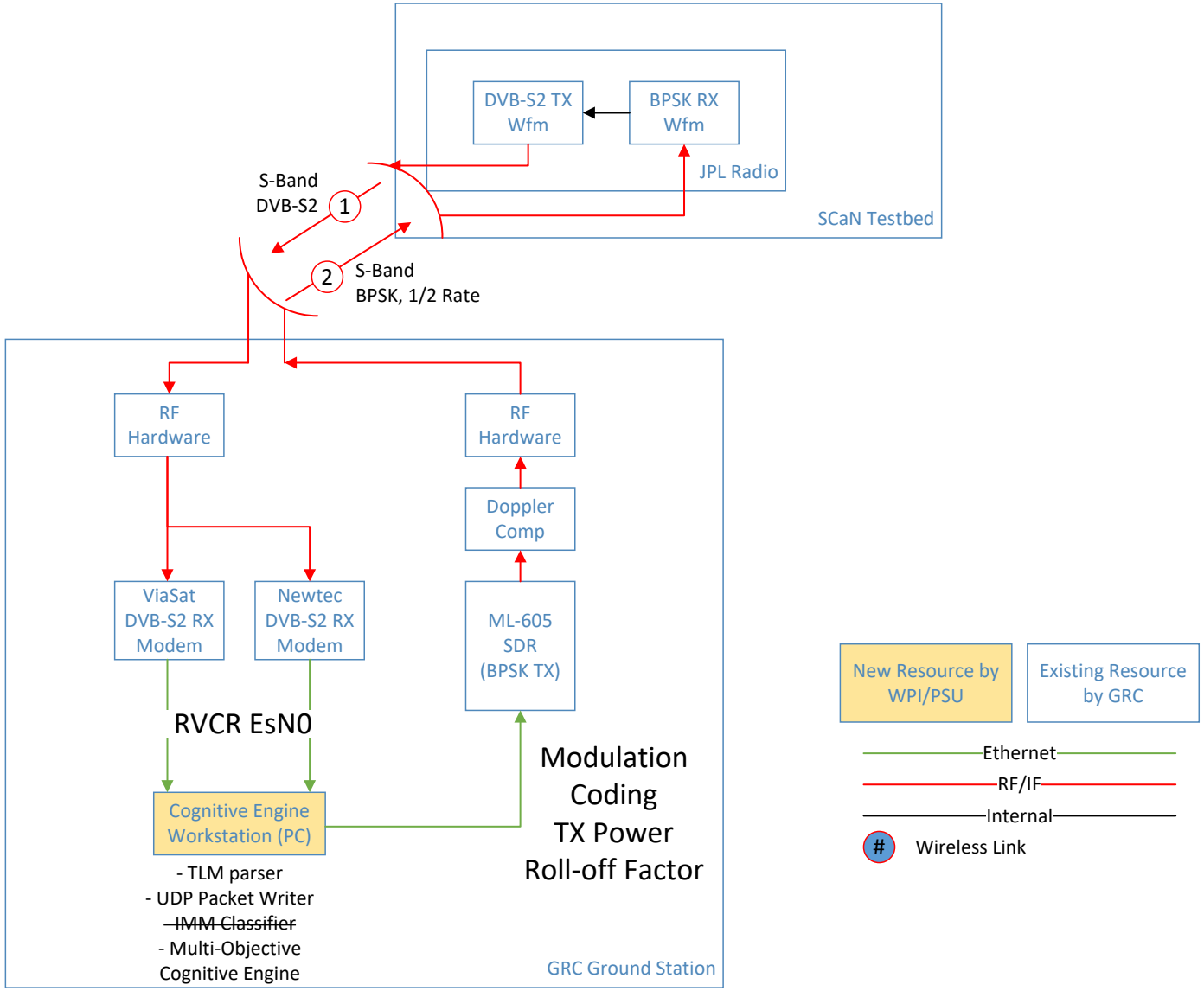

PennState

Timing Trade Study

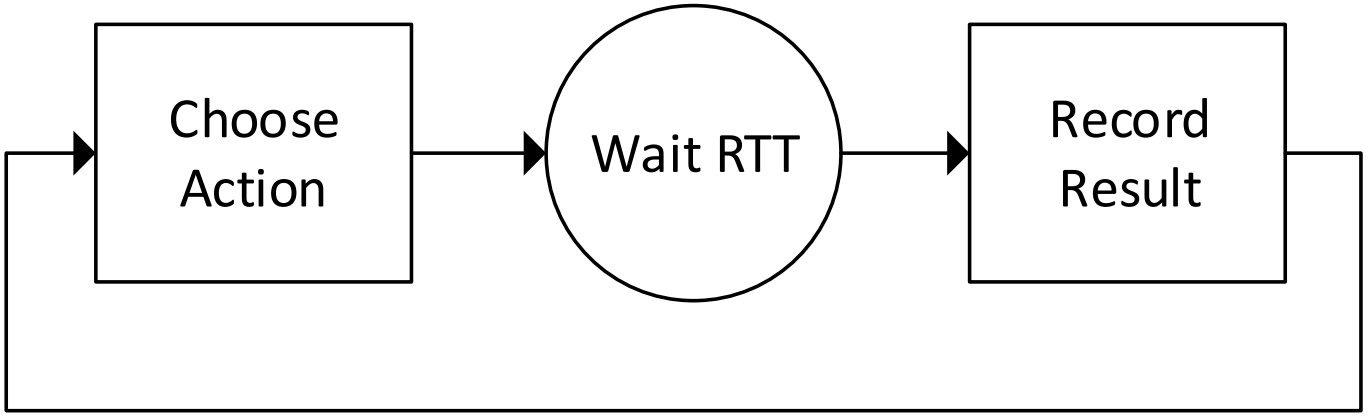

Implemented Software Architecture

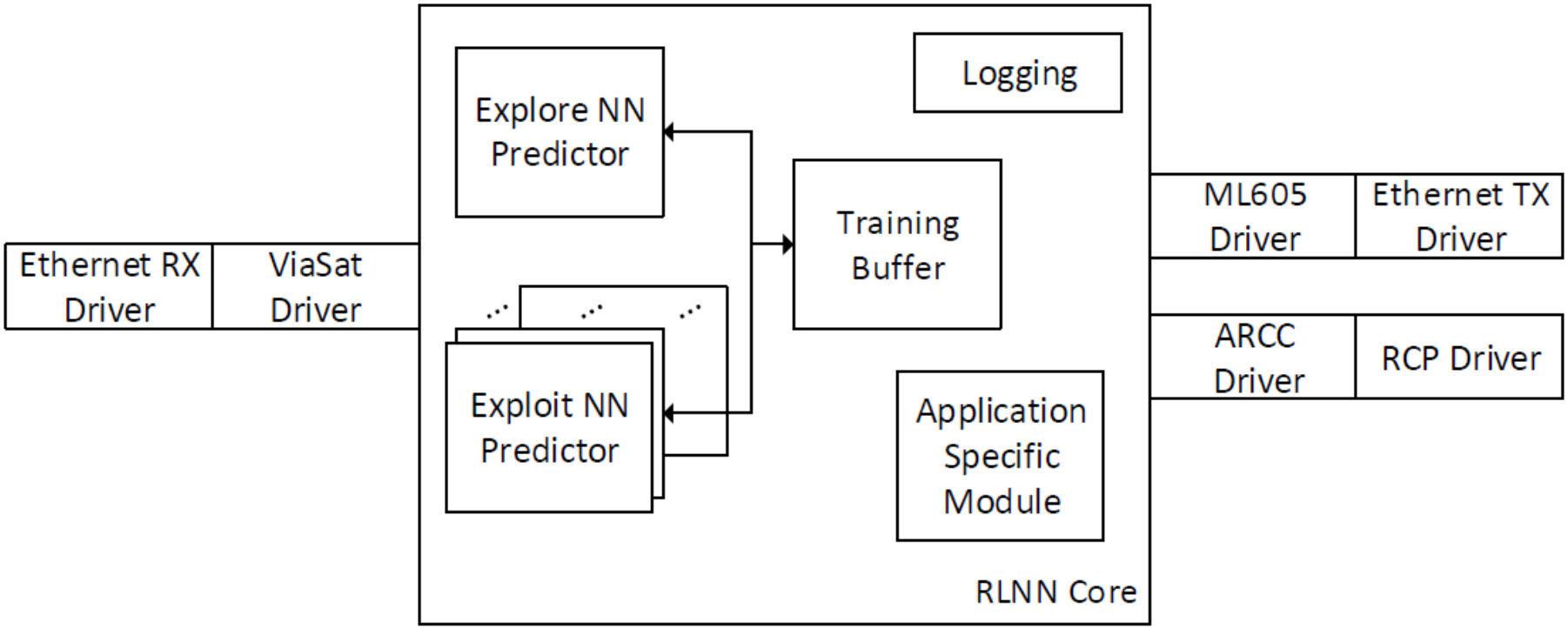

PennState

Implemented Software Architecture

```
fitObserved: 0.822323
1259: Choosing Action
Exploiting
1259: Action Chosen: 578
1259: Symbol Rate Idx: 0
1259: TX Power Idx: 8
1259: ModCod Idx: 0
1259: Roll Off Idx: 2
1259: ModCod: 1
1259: Transmitting Action
1259: measurementVec:
  -9.7071e-01  -3.5000e+00   2.0000e+06   2.0000e-01   4.0000e+00   2.5000e-01

1259: Recording Response
fitParams:
        0   1.0000        0   0.0139   0.2060   0.6730

fitObserved: 0.822323
1260: Choosing Action
Exploring
Random Explore
1260: Action Chosen: 817
1260: Symbol Rate Idx: 0
1260: TX Power Idx: 11
1260: ModCod Idx: 8
1260: Roll Off Idx: 1
1260: ModCod: 9
1260: Transmitting Action
```

PennState

Implemented Software Architecture

```
::Iteration: 108
::Start Time: 2017-May-12 10:59:23.298397
::Action Type: Exploiting
::Action Chosen: 2017-May-12 10:59:23.298978
::Action ID: 663
::Action Params: 1e+06  -3  2   0.35    4   0.666667
::Action Sent: 2017-May-12 10:59:23.299160
::Action Received: 2017-May-12 10:59:23.339594
::Receive Lock: 1
::Measurement Received:   3.6000e+00  -3.0000e+00   1.0000e+06   3.5000e-01   4.0000e+00   6.6667e-01
::Objective Fitnesses Observed:    0.2113   1.0000   1.0000   0.1852   0.4273   0.6067
::Fitness Observed: 0.586339
::Training: Yes
::End Time: 2017-May-12 10:59:23.340308

::Iteration: 109
::Start Time: 2017-May-12 10:59:23.340349
::Action Type: Exploiting
::Action Chosen: 2017-May-12 10:59:23.341028
::Action ID: 663
::Action Params: 1e+06  -3  2   0.35    4   0.666667
::Action Sent: 2017-May-12 10:59:23.341177
::Action Received: 2017-May-12 10:59:23.381552
```

PennState

Summary

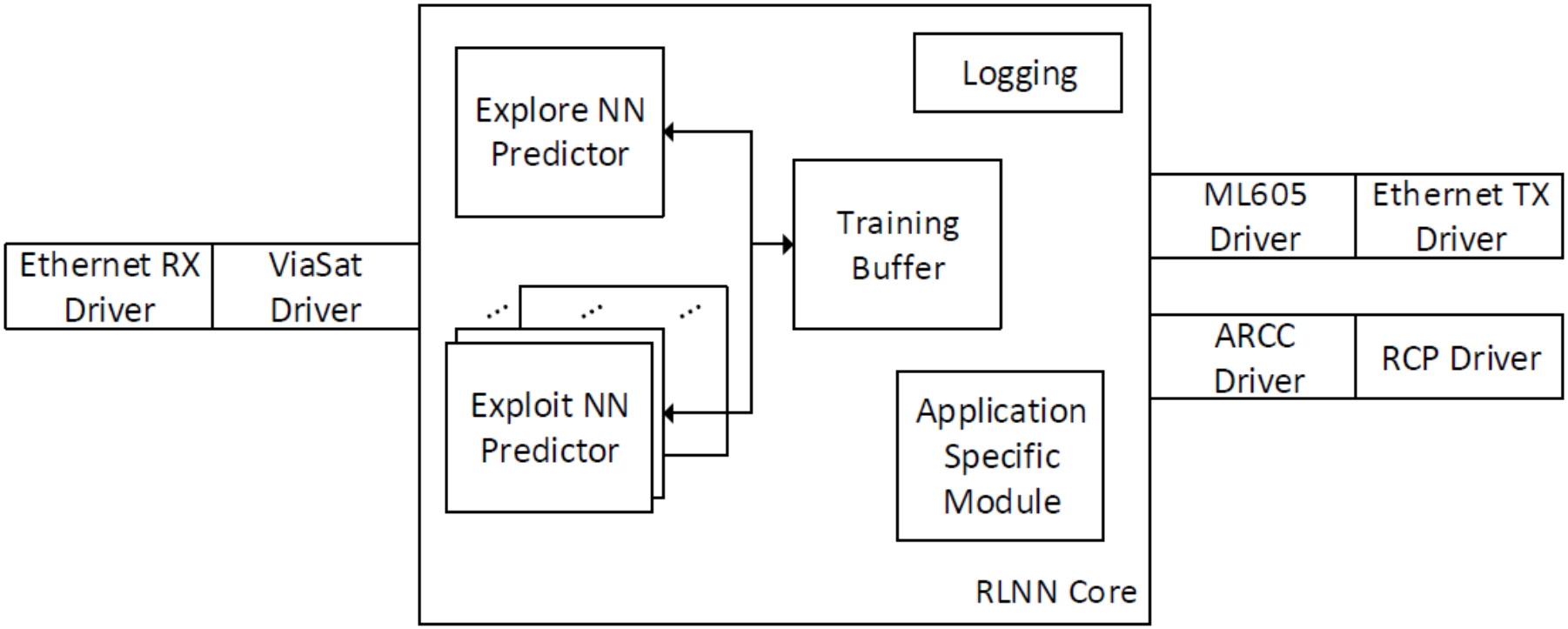

If you're interested, contact me at:

Tim Hackett: tmh5344@psu.edu

PennState