https://ntrs.nasa.gov/search.jsp?R=20180004907 2020-03-11T00:06:08+00:00Z

GSFC

Progress and Plans for a US Laser System for the LISA Mission

Kenji Numata, Anthony Yu, Hua Jiao, Scott Merritt,
Frankie Micalizzi, Molly Fahey, Jordan Camp, Michael Krainak
NASA Goddard Space Flight Center
13 JULY 2018

the 12th International LISA Symposium
Chicago, Illinois, USA

Goddard Space Flight Center

Abstract

- **1. Introduction**
  - LISA requirements
- **2. NASA laser architecture**
  - MOPA
- **3. NASA Laser Activities**
  - Master oscillator
  - Power amplifier
  - Risk Mitigation and Reliability Test Plans
- **4. Summary**

1. Introduction

- **High level LISA laser requirements**
  - Dimensions 200x200x200mm per LH*.
  - Mass 10kg per LH*
  - Volume and mass allocations to be spread between sub-units (LOM and LEM).
  - LS dissipated power <50W
  - LS OP temperature 20±10°C
  - LS NOP temperature -20°C to +50°C
  - LEM interfaces TBD depending on concept.
  - >2W on OB at EoL
  - Polarisation linear (S TBC)
  - Few mW pick-off for Laser Pre-stabilization System (LPS)
  - Lifetime >16 years (including ground testing, cruise, normal and extended science ops)
  - Wavelength 1064.49nm

Redundancy

- Each payload has two laser system assemblies, each associated with a MOSA and pointing toward the distant S/Cs.
- Each laser system (LS) contains two Laser Heads (LH); 4 per S/C, 12 in the constellation.
- Cold redundancy
- Each laser system comprises a Laser Optical Module and Laser Electrical Module (LEM)
- Each Laser Optical Module comprises a Master Oscillator and a Power Amplifier
- 1 Laser is master the others are slaves
- One single Laser Pre-stabilization system per S/C
- Redundancy at constellation level (1 single one needed, TBC Arm-Locking)
- LPS interfaces with LEM and potentially Phasemeter.

2. NASA Laser Architecture

- The GSFC laser transmitter design for the LISA mission is based on the master oscillator (MO) power amplifier (MOPA) architecture and is the best technical path for meeting the LISA requirements
- A MOPA architecture separates the problem: the MO dominates the frequency and phase noise, whereas RIN is usually associated with lasing at high power
- High power means a large resonator, in which it is difficult to maintain resonator alignment, length, vibration of components that would lead to noise.
- We choose to use a smaller, monolithic, lower power MO approach to minimize noise contribution.
- Design the MO to meet spatial, spectral and temporal requirement except power
- Use the optical power amplifier to scale the output
- This architecture flew on NFIRE
- This is consistent with the ESA approach for LISA as well as related systems such as LIGO and Advanced-LIGO
- Modulator – depending on the MO design, the modulator could be a stand alone subsystem or part of the MO package
- Power Amplifier – Single frequency, low noise power amplifier for power scaling of the MO. This may contain a pre-amplifier stage if higher gain is necessary, depending on MO output power level.

Laser Optical Module (LOM)

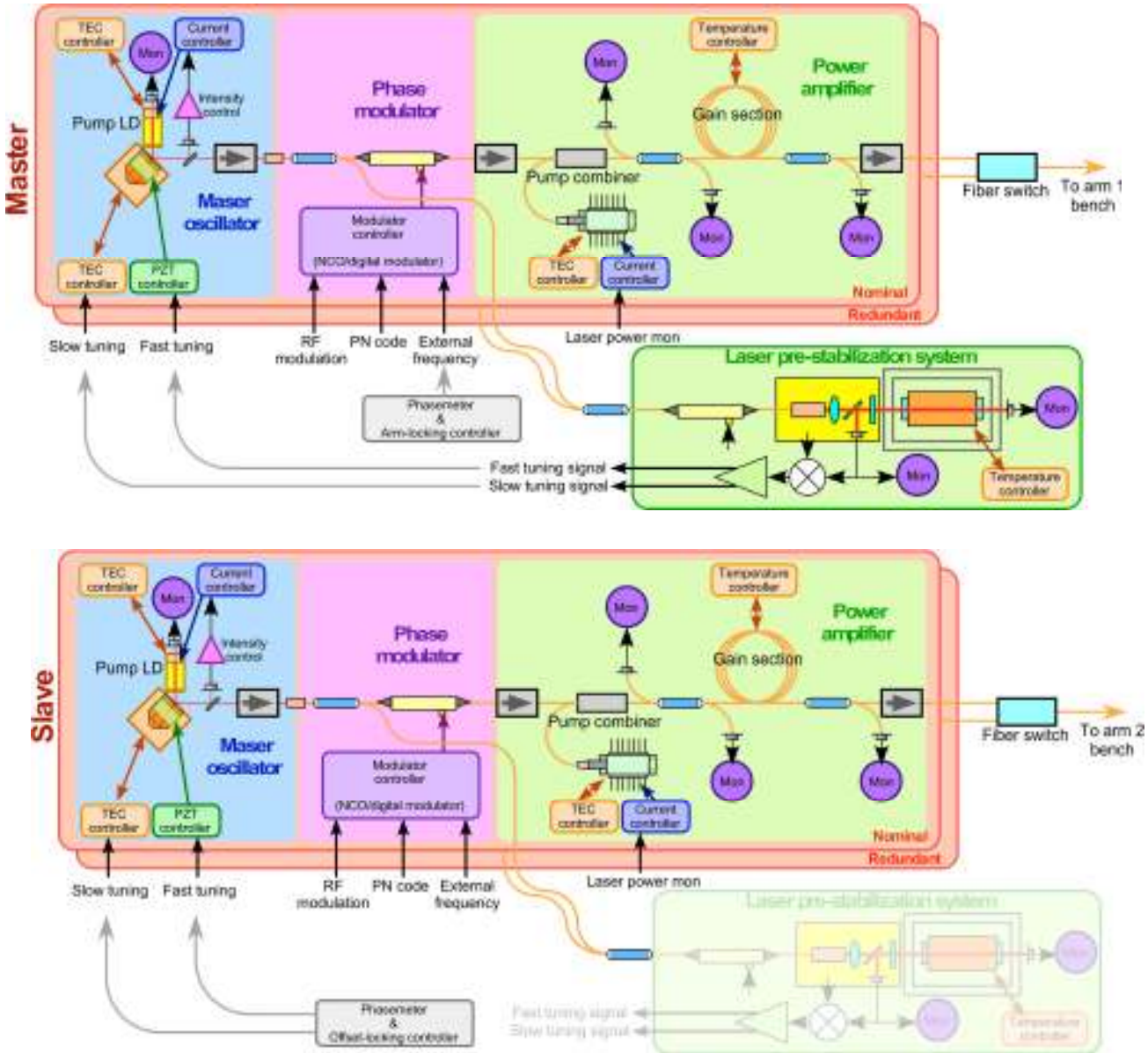

Laser System with LEM

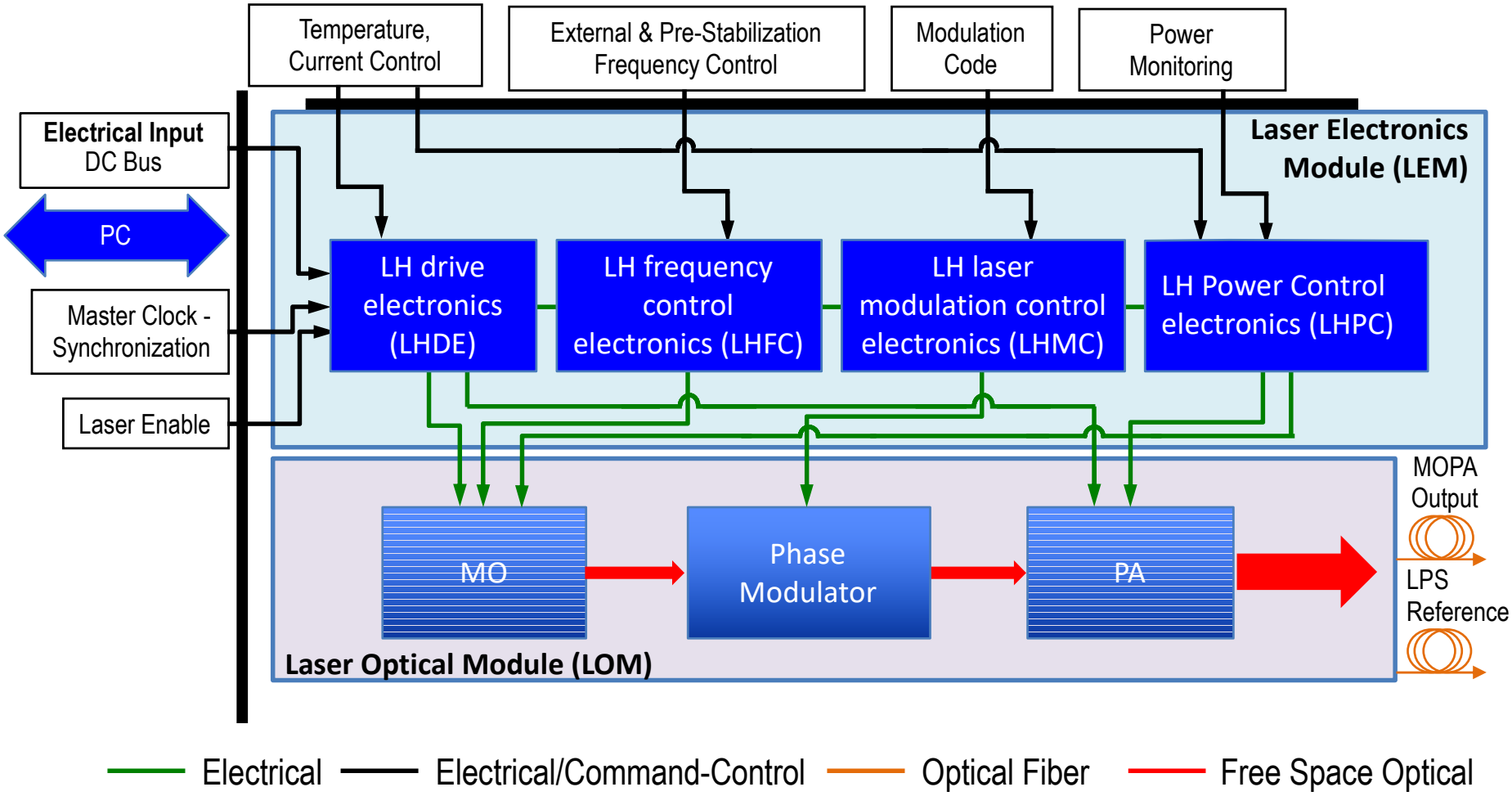

3. NASA Laser Activities

- **To develop and improve the technology readiness level (TRL) of the laser transmitter for the LISA mission to 6.**

Tasks	GSFC Milestones	ESA Milestones and Need Dates
TRL4/5 Laser System Engineering Model (EM) (no-Prestabilization) Delivery	10/2019	MFR (End Phase A): November/December 2019
TRL6 Laser System Engineering Test Unit (ETU) with Pre-stabilization Delivery	7/2021	Unit-Level TRL 5/6 for Payload Demonstrator items: end 2021
TRL6 Laser System ETU Lifetest	implement at various development stages	"integrated-level" TRL 6 for adoption: end 2023

- **Significance of Work:**
  - Develop enabling technology for the LISA mission
  - US contribution to the LISA mission led by ESA
- **Approach:**
  - MOPA laser architecture that is consistent with the ESA approach for LISA
  - Develop two MO approaches for risk mitigation
  - Similar parallel approach for the PA development
  - Integrate MO and PA to demonstrate MOPA performance meeting LISA's requirement.
  - Develop and implement reliability test plan on critical components and systems.

3.1. Master Oscillator

- **GSFC's m-NPRO features to address**
- **Larger free-spectral-range (FSR)**
  - Wider mode-hop-free tuning range (more robust)
  - Less coupling from neighboring mode
- **Larger overlap between pump and signal**
  - Minimized un-pumped region (smaller loss)
- **Smaller mass & small piezoelectric actuator**
  - Wider frequency-tuning bandwidth (better in-loop noise supp
  - More efficient tuning (larger tuning per voltage)
- **Smaller thermal volume**
  - Easier thermal control, uniform temperature, faster heat extr
  - Less electrical power for house keeping
- **Smaller package possible**
  - Use of telecom packaging technology
  - Alignment tolerant crystal design

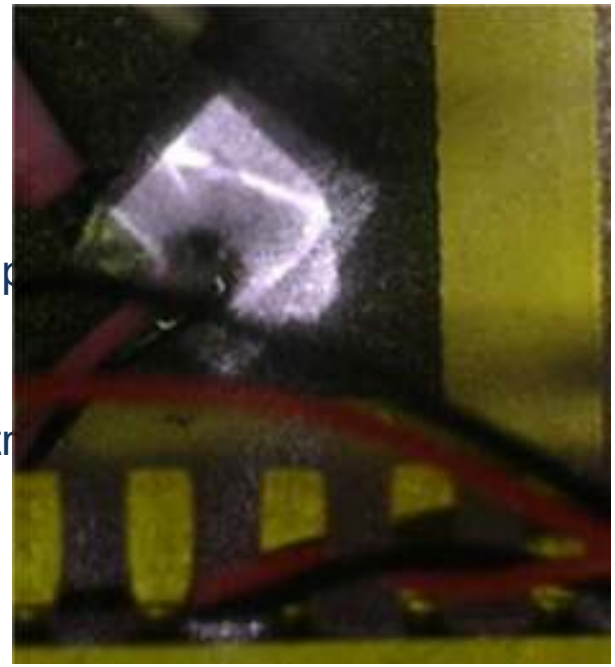

Goals are to reduce size, weight and power with improved performance compared to NPRO.

Preliminary Breadboard Performance

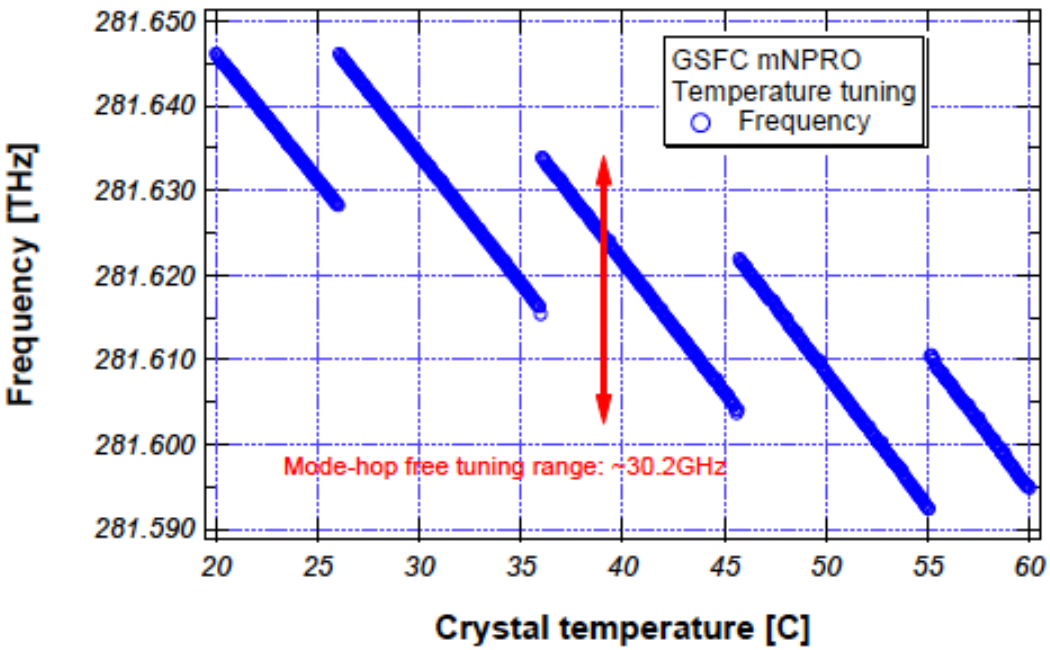

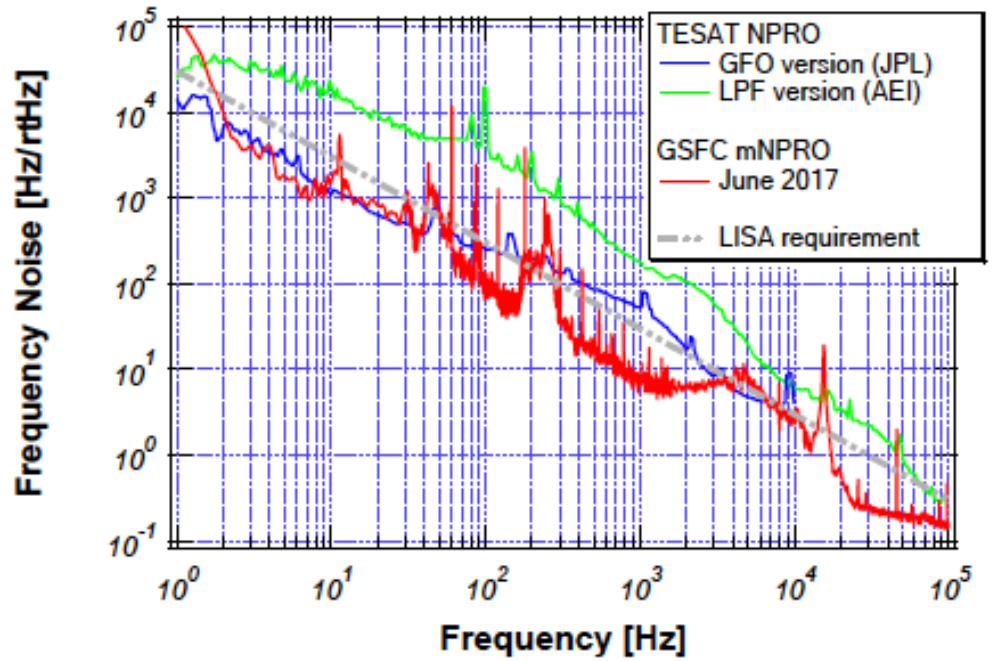

mode-hop free tuning of >30GHz and preliminary frequency noise measurement of the m-NPRO laser breadboard

Overview of m-NPRO Packaging Effort

Avo Photonics

- Completed Pre-Design Review (PDR) - 3/2018
- A mechanical model has been developed in accordance with optical design and required optical alignment tolerances.
- Broadly, the design allows for minimal mechanical changes to move from prototype versions where epoxy is predominantly used to hold/align optics to production where epoxy is eliminated in favor or welded or soldered components.
- The design has been developed to be modular in nature such that key subassemblies may be assembled, characterized, and qualified outside the overall system.
- An overview of key subassemblies and components are shown below:

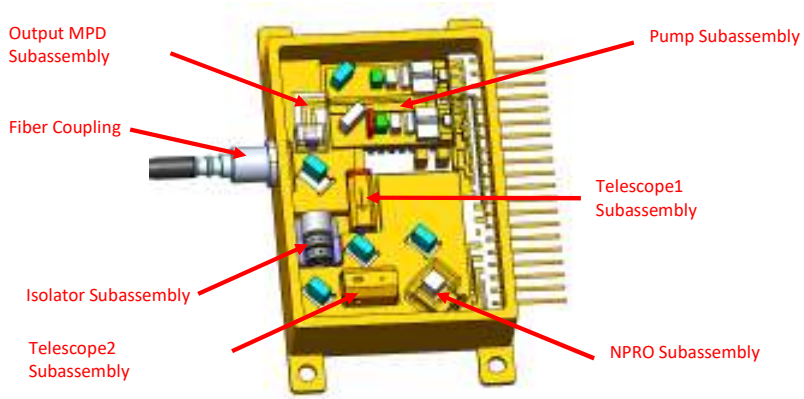

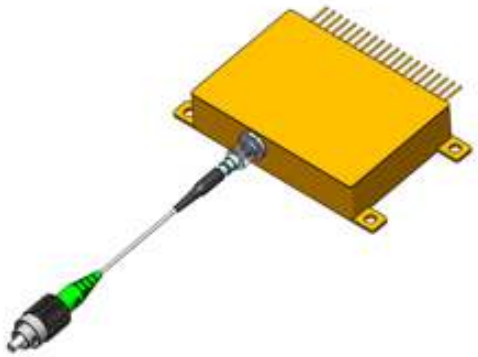

Approach 2 –NPRO Master Oscillator from Coherent

- Initiated collaborative effort with Coherent to advance the Mephisto NPRO product from TRL4 to TRL6.
- Mephisto is a family of ultra-narrow linewidth low noise CW lasers based on Nd:YAG crystal in Non-Planar Ring Oscillator (NPRO) configuration
- The intrinsic stability of the laser is further improved by Noise Eater (NE) technology
- Mephisto line was initially developed by Innolight for gravitational waves research –later acquired by Coherent in 2012
- Coherent now controls the supply chain of key Mephisto elements –both NPRO crystals and pump diodes are produced by Coherent business units in US
- Highly Accelerated Life Testing (HALT) and Highly Accelerated Stress Screening (HASS) are testing protocols widely used across different Coherent products to ensure maximum reliability and customer uptime.
- Currently on-hold due to limited funding.
- Target to start in FY19

PA Approach 1 - GSFC POWER AMPLIFIER

- **All-fiber configuration, based on LGS study**
  - >2W, continuous-wave output
    - Double-clad large mode area (LMA) fiber
    - Forward pumping for safety & lower SBS noise

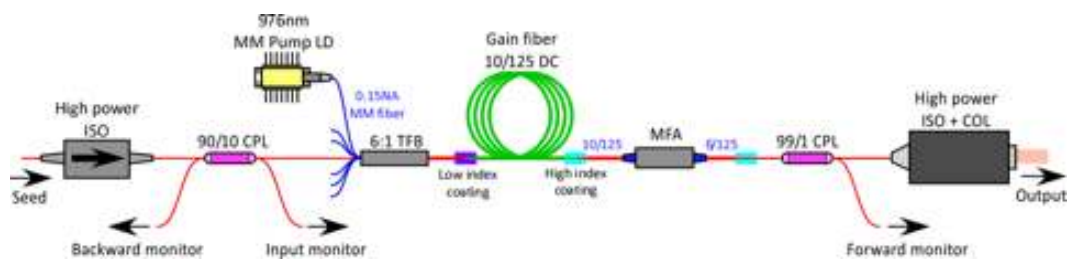

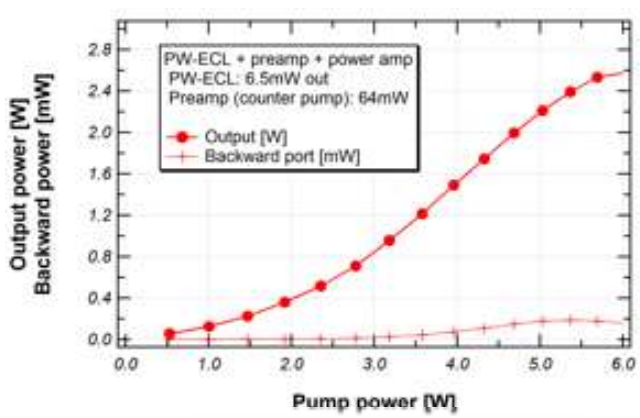

GSFC PA performance

GSFC PA package (demo model)

GSFC Fiber Amplifier Brassboard

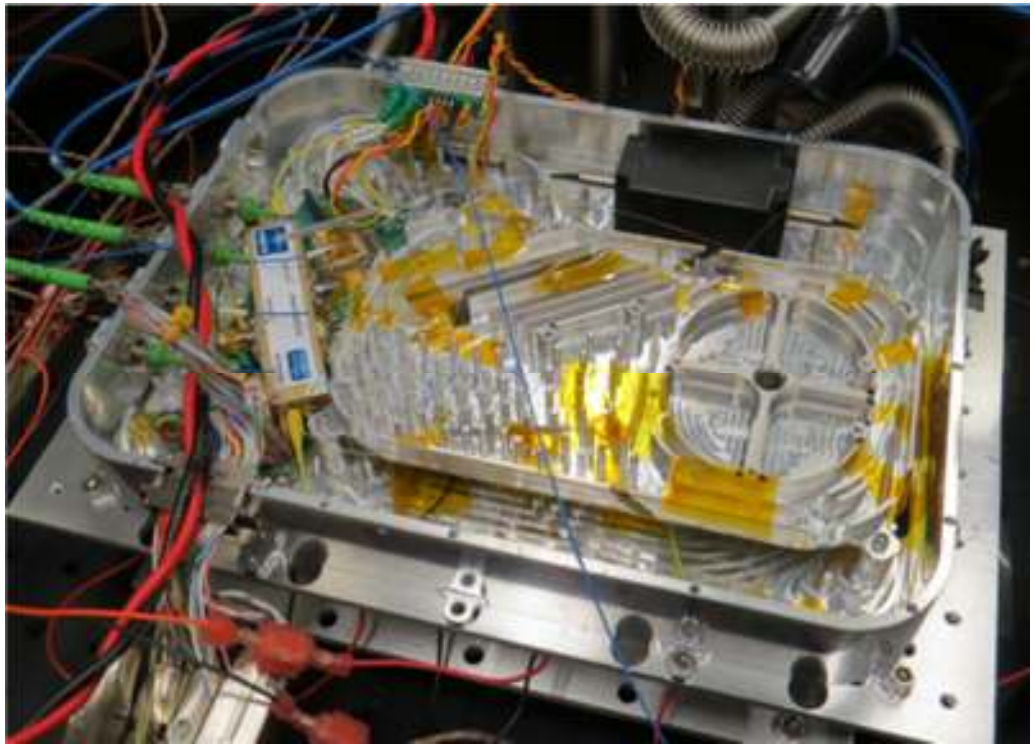

- Test amplifier built by GSFC in TVAC chamber.
- Used for environmental testing and intensity stabilization demonstration.
- Current Dimensions- 260 mm (L) x 190 mm (W) x 40 mm (H)
- This package includes both semiconductor seed laser and a fiber amplifier pumped with a single pump diode.
- We plan to repackage this fiber amplifier to fit within the LH volume

GSFC/LGS Fiber Amplifier Breadboard

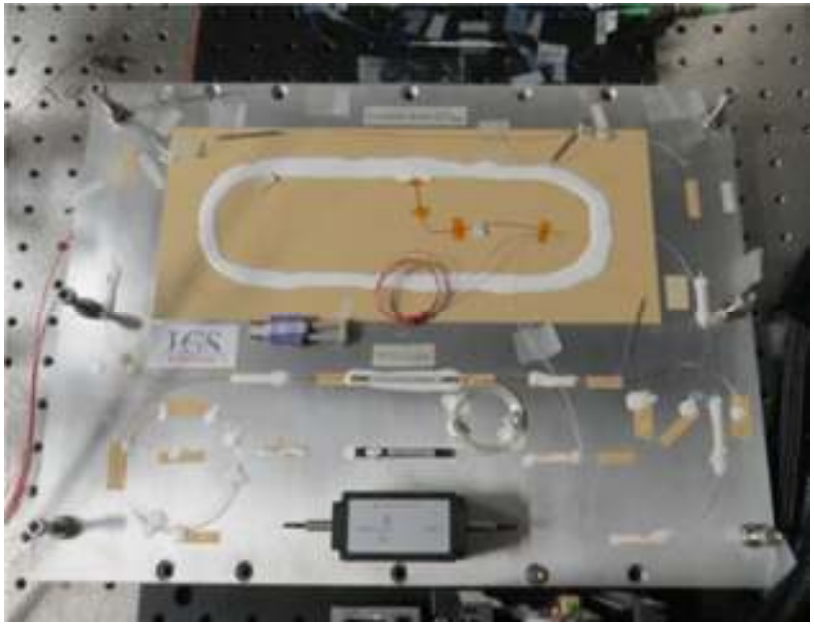

- Prototype amplifier built by LGS.
- To be used for components testing
- Also use to develop testing procedures.

Early qualification results

- **MO (ECL) + Preamplifier**
  - Environmental testes done at GSFC
- **Power amplifier**
  - Environmental tests mostly done at LGS
    - Many other 1um fiber components tested
    - Switched gain fiber
      - » For smaller radiation sensitivity

TVAC, vibration, and radiation effects on MO + preamp

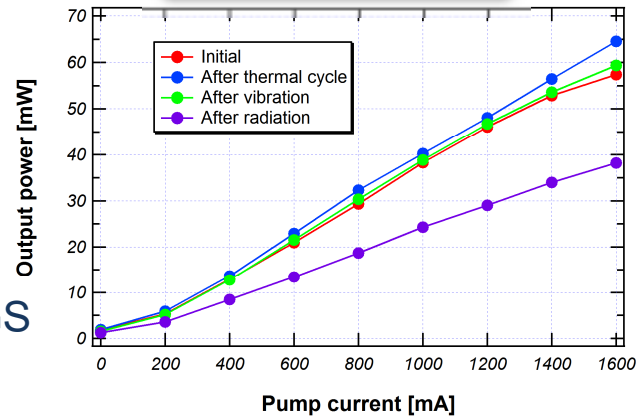

MO+Preamp package in radiation chamber

Power amp package in TVAC chamber (GSFC)

Power & PER during TVAC test

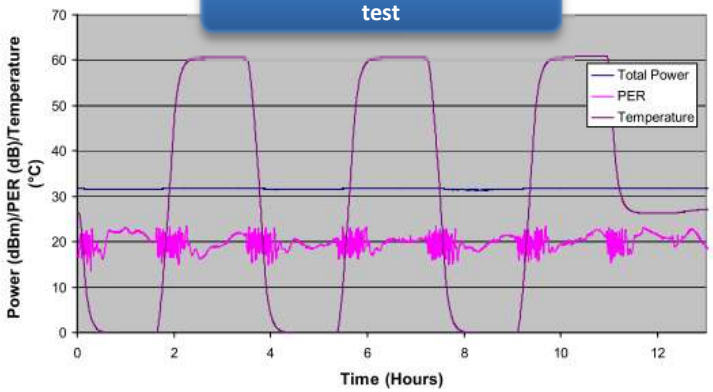

Power amplifier in TVAC chamber (LGS)

Approach 2 – External Vendor Power Amplifier

1. Approach for Power Amplifier follows similar process used in similar laser development programs to down select from multiple vendors
2. Two phase approach from multiple vendors
   - Solicited proposals for Phase 1 (multiple vendors) - starts 7/2018
   - Phase 2 starts 10/2018
3. Phase 1 delivery from selected vendors to GSFC for performance evaluation
4. Down select and continues to Phase 2 effort
5. Phase 2 -
   - Delivery of EM to GSFC – Complete by 3/2019
   - Delivery of ETU to GSFC – Complete by 1/2020

MO + amplifier system noise

- **System noise demonstrated to satisfy LISA requirements**
  - Master oscillator + power amplifier

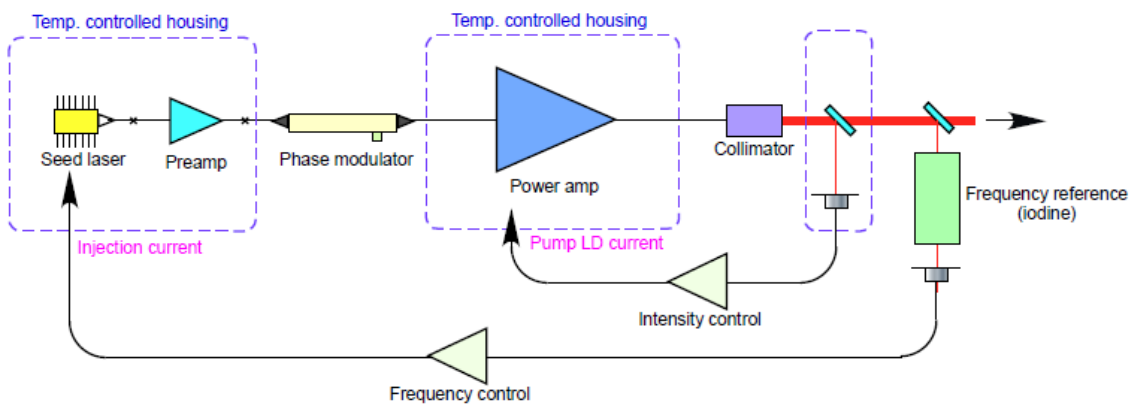

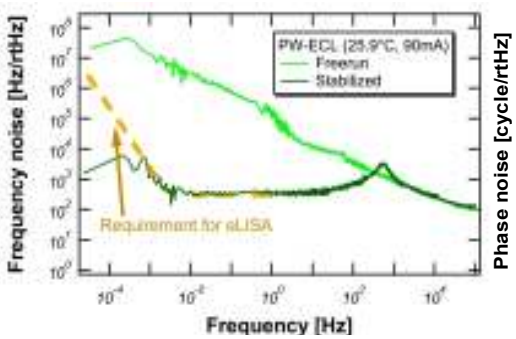

Stabilized frequency noise of PW-ECL + GSFC PA

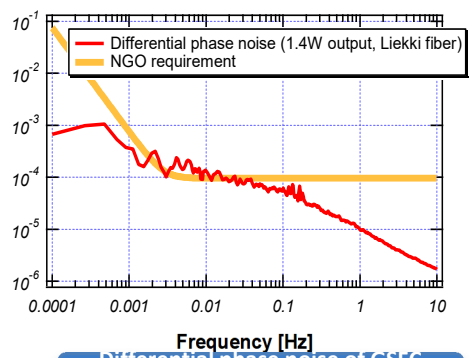

Differential phase noise of GSFC PA

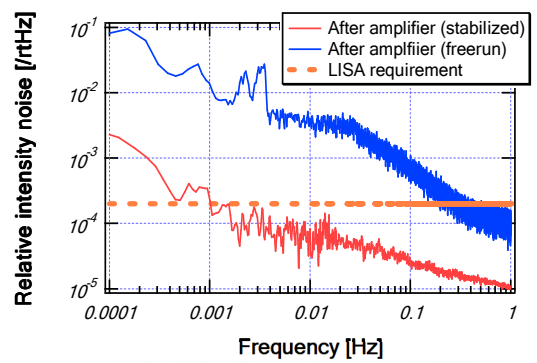

Stabilized intensity noise of GSFC PA

Preliminary Laser Head Layout

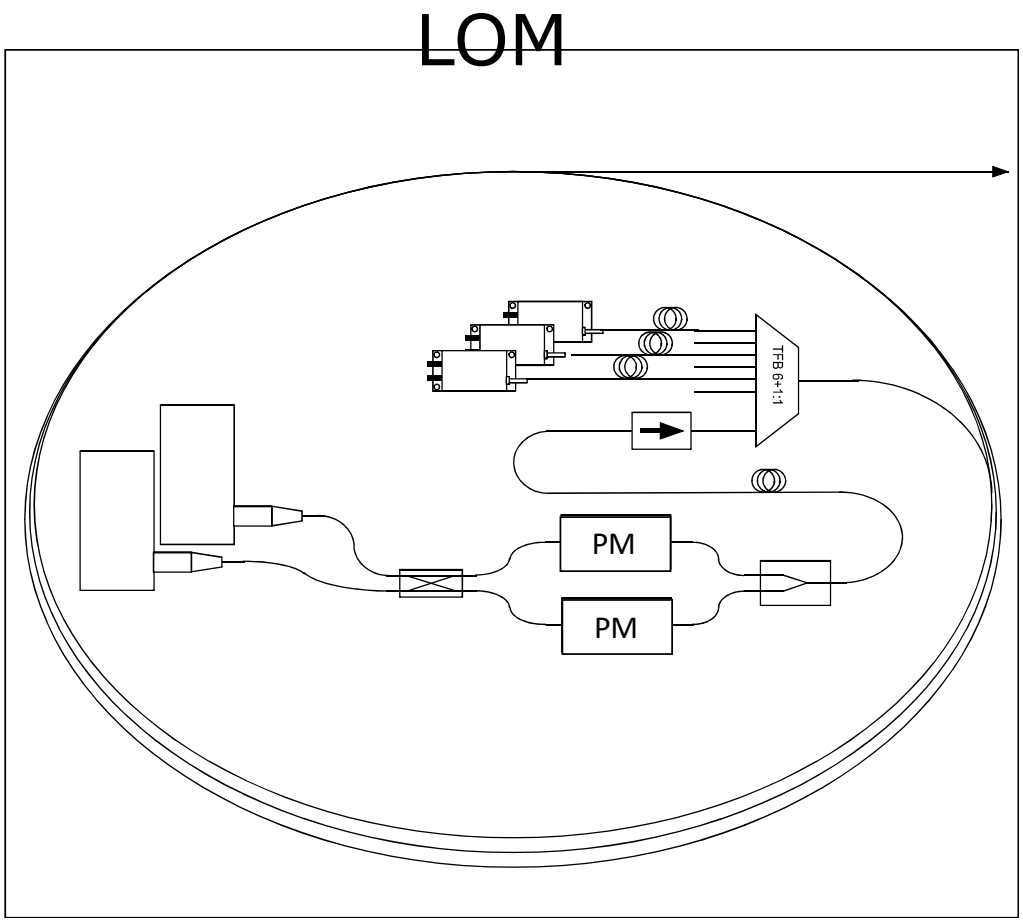

- Full redundant MO
- Full redundant PM
- Redundant pump diodes for PA

Laser Maturation and Risk Mitigation Plan

Laser Technology Maturation Stages	Definitions	Benefits and Risks Mitigation	Risks not Addressed in Each Stage
Breadboard **TRL 4** **Internal GSFC Demonstration by 12/2018**	• A low fidelity unit that demonstrates function only, without respect to form or fit in the case of hardware, or platform in the case of software. • Most often uses commercial and/or ad hoc components and is not intended to provide definitive information regarding operational performance.	• Demonstrate functionalities of the laser transmitter for LISA. • Allow flexibility to try different layouts and investigate effects such as misalignment tolerance, temperature operation range, optical feedback, etc.	• Not addressing form factor • Not properly address thermal management • Not addressing possible stray lights, potential optical feedbacks from closely packed components • Not addressing potential opto-mechanical interference
NASA – Brassboard or Engineering Model (EM) or TRL4/5 **ESA – Demonstration Model (DM)** **Planned delivery on 10/2019**	• A medium fidelity functional unit that uses as much operational hardware as possible. • Begin to address scaling issues associated with the laser system. • Structured to be able to operate in simulated operational environments in order to assess performance of critical functions.	• Demonstrate form factor and functionality. • Allow investigation of closely packaged optical components and potential stray light and feedback issues in flight laser. • Allow feedback on thermal design and management for the full up laser and if needed, make design change. • Lifetest to demonstrate design ruggedness.	• Not addressing environmental test concerns • Not addressing sealed or pressurized laser performance. • Not addressing external environment for actual space deployment, i.e. vacuum. • Not addressing laser electronics – use COTS electronics only
NASA - Engineering Test Unit (ETU) **TRL 6** **ESA - Elegant Engineering Model** **Planned Delivery on 7/2021**	• A high fidelity unit that demonstrates critical aspects of the engineering processes involved in the development of the operational unit. • Intended to closely resemble the flight unit to the maximum extent possible. • Built and tested so as to establish confidence that the design will function in the expected environments. • The ETU could become the final product, assuming proper traceability has been exercised over the components and hardware handling.	• Include all lessons learned from EM build and iterate on EM design to minimize turn-around time. • Demonstrate form factor and function in a flight like configuration and in relevant environment. • Use proven opto-mechanical designs for packaging to minimize potential problems. • Full demonstration of laser performance in relevant environment including laser electronics • Lifetest of ETU to build confidence on the laser functionality and reliability for LISA	• Not addressing flight laser build process and quality control.

Risk Assessment

Risks	Likelihood	Mitigation	Post-Mitigation Residual Likelihood
Reliability / lifetime	Medium to High	• Derating • Life test • Leverage lessons learned from previous missions • Redundancy • Components evaluation and selection	Medium
Early failure of pump diodes	Low to Medium	• CW pump diodes with derating • Lower peak power than previous missions	Low
Laser damage	Low to Medium	• Internal fluence significantly lower than previously built lasers • Pressurized enclosure to minimize contamination induced damage • Follow established quality control and build processes	Low
Laser system doesn't meet LISA noise requirements after environmental testing	Low	• Build engineering model using knowledge gained from laboratory studies. • Maintain vigorous testing program throughout laser program	Low
Components/Vendors Availability	Medium to High	• Qualify multiple vendors as early as possible • Reliability tests • Work closely with vendors to address issues and find replacement	Medium

Up-Screening to meet component FIT Rates Supportive of LISA Mission Reliability

- The LISA mission requires reliable performance of the master oscillator power amplifier (MOPA) system for an end-of-life (EOL) term of 16 years, i.e. 140 kilo-hours. For a given 90% upper confidence limit (UCL), one wants the FIT rate of the MOPA at EOL to remain below 16,400.

	Test	Telcordia GR-1212 fiber optics Requirements	Telcordia GR-468 electro optics Requirements	NASA GEVS component Requirements
Mechanical	Fiber pull	3 pulls, 5 sec/pull at 1.0 Kg	0.25 kg, 90 deg (side pull), 22 to 28 cm from device housing 0.5 or 1.0 kg, 3 cm from device housing, 10 cycles (twist)	*(FOTP-88 & FOTP-31 referenced by EEE-INST-002)*
	Shock	500 g, 5x/axis, 1 ms	500 g, 5x/axis	500 g, 2x/axis(x,y,z)
	Sine vibration			5-50 Hz, axis (x,y,z), ?g
	Random vibration	20-2,000 Hz- 4min/cyc, 20 G peak, 4 cyc/axis	20-2000 Hz back to 20Hz- 4 min/cy, 4 cy/axis, 20 G peak	20-2,000 Hz, accel function of freq, 14.1 Grms
Endurance	High temp. (storage)	2000 hrs. at 85°C	2000 hrs. at 85°C	10 °C & 10 RH higher than expected for a min of 6 hrs
	Low temp. (storage)	2000 hrs. at -40°C	72 hrs. at -40°C	10 °C & 10 RH lower than expected for a min of 6 hrs
	Thermal cycling (survival)	-40 to 70°C, 100 cycles	-40 to 85°C, 50, 100 or 100 cycles depending upon type & environment	Expected temp range increased by 5 °C (accpt) or 10 °C (qual) on either side of range, 8 cycles (min)with 4 hrs soak (min)

Goals and Structure of the Reliability Plan

An effective reliability program requires more than life-testing components and subsystems; it requires both

1. establishing screening criteria, handling procedures, installation procedures, test procedures, and operating conditions or set points, and
2. understanding the physics of failure of relatively high risk components so that the conditional probability of failure is minimized.

The reliability program must guide the design of the screening protocols then provide proof (or disproof) of the efficacy of the screens, procedures and choice of operating conditions.

RELIABILITY TEST PLAN WORK FLOW

1. **Establish Failure Criteria**
   - List (e.g. Power declines to 2 Watts, wavelength, linewidth, SMSR, etc.)
   - Prioritize/Rank
2. **Develop Draft of Bill of Materials (BOM)**
3. **Tabulate Limited Life Items from BOM**
   - (e.g. estimate FIT rate of components; this is dependent on Failure Criteria)
4. **Analyze design for reliability tradeoffs**
   - (complexity, redundancy/sparing, de-rating, re-configuration/switching)
5. **Perform Design Failure Modes and Effects Analysis (DFMEA)**
6. **Prepare Reliability Test Plan**
   - Critical Components (as determined from limited life analysis)
   - Subsystem
   - System

- **Steps 2-5 are iterative.**

Grouping of Components

Our plan is to group components into Groups 1, 2, and 3, defined as follows:

- **Group 1**: Those components which are either critical or for which one must both use very stringent or extraordinary screening techniques and analysis of the physics-of-failure to reduce the *a posteriori* FIT rate to less than 100.
- **Group 2**: Those components, for which we deem normal screening techniques can reduce the conditional or *a posteriori* FIT rate (i.e. the FIT rates expected after passing the screen) to less than 100.
- **Group 3**: Components, usually passive, with *a priori* FIT rates less than 100.

Group 1 & 2 Components

Subassembly	Component or Element	Priority	BEFORE Estimated FIT Rate, peak, 90%, 16 year	AFTER Estimated FIT Rate, Advanced Screen	Estimated Activation Energy (eV)	Quantity per Assembly	Sample Size
Master Oscillator	Pump Laser Diodes, 808 nm	10	2000	200	0.35	2	30
Power Amplifier	Pump Laser Diodes, 976 nm	10	500	50	0.45	2	30
Power Amplifier	Pump combiner (TFB)	9.5	300	30	0.48	1	30
Master Oscillator	TEC - Pump Diode	8.5	200	20	0.51	1	30
Master Oscillator	TEC - m-NPRO module	8.5	200	20	0.51	1	30
Integrated Module	2x1 Switch, PM, 1 um, MEMS	10	143	15	0.54	2	30
Power Amplifier	Isolator-ASE filter hybrid	8	125	15	0.55	1	30

Group 1

Group 2

Default sample size 24

Methodologies for Groups 1 & 2 Components

GROUP 1 METHODOLOGY

- Group 1 components will be subjected to physics-of-failure analyses that address infant mortality, random failure, and wear-out mechanisms to support the selection of screening and burn-in criteria, life-test design, and End-of-Life (EoL) calculations, respectively.
- We will use our physics-of-failure analyses to protect against "excess acceleration" in life-test, establish the maximum acceleration that does not introduce irrelevant failure modes, and estimate the parameters of a reduced-order Accelerated Stress-Deposition Model (ASDM).

GROUP 2 METHODOLOGY

Group 2 components and modules, e.g. the 2x1 switch, isolator-collimator, and m-NPRO TEC will be life-tested with ASDM. The m-NPRO TEC will also be subjected to the following tests.

AC Resistance Test [before and after each environmental stress (TVAC and radiation) test A, B, C]
Insulation Resistance Test [before and after each environmental stress (TVAC and radiation) test]
Temperature Cycling Series
Thermal Performance Test (including heat load testing) : High, Low
Vibration : Sine, Random
Mechanical Shock
Life Test Ambient Temperature: 60C Current: Maximum Operating current Cycle Time: 1 minute ON, 1 minute OFF (exact time depending on the thermal time constant of the assembly) Number of cycles: 1000

Group 3 Components

Subassembly	Component or Element	Priority	BEFORE Estimated FIT Rate, peak, 90%, 16 year	AFTER Estimated FIT Rate, Advanced Screen	Estimated Activation Energy (eV)	Quantity per Assembly	Sample Size
Integrated Module	Phase Modulator	10	80	15	0.59	1	18
Master Oscillator	Optical Isolator	8	75	10	0.59	1	18
Power Amplifier	Optical Isolator	8	75	10	0.59	1	18
Master Oscillator	PZT element	8.5	60	6	0.61	**1**	18
Power Amplifier	Cladding power stripper	8	50	5	0.63	1	11
Master Oscillator	Nd:YAG	5	50	5	0.63	**1**	11
Master Oscillator	Polarization Combiner	2	40	4	0.66	**1**	11
Power Amplifier	Mode-field adapter	8	20	20	0.73	1	11
Master Oscillator	Collimator	2	20	10	0.73	**1**	11
Power Amplifier	Gain fiber	6	16	16	0.76	1	11
Integrated Module	Harness	1	15	10	0.76	1	11
Power Amplifier	In-line monitor	8	12	6	0.79	2	11
Master Oscillator	Monitor Photodiode	7	12	12	0.79	2	11
Master Oscillator	Back Facet Monitor Diode	7	12	12	0.79	2	11
Power Amplifier	Monitor diode	7	12	12	0.79	2	11
Integrated Module	Monitor Photodiode	7	12	12	0.79	2	11
Master Oscillator	Mode Matching Optic	2	10	5	0.81	**1**	11
Integrated Module	Tap Monitors	7	6	6	0.88	1	11
Power Amplifier	Low index coating	5	5	5	0.91	1	11
Master Oscillator	Submounts	2	5	5	0.91	**1**	11
Master Oscillator	Mirror	2	5	5	0.91	**1**	11
Master Oscillator	Half Wave Plate	2	5	5	0.91	**1**	11
Master Oscillator	Mirror	2	5	5	0.91	**1**	11
Master Oscillator	Lenses	2	5	5	0.91	**2**	11
Master Oscillator	Mirror	2	5	5	0.91	3	11
Master Oscillator	Mounts	1	5	5	0.91	8	11
Master Oscillator	Housing	1	5	5	0.91	1	11
Integrated Module	MOPA Housing	1	5	5	0.91	1	11
Master Oscillator	Magnet	3	4	4	0.94	**1**	11
Master Oscillator	Preforms	1	3	3	0.98	10	11
Integrated Module	Mechanical Parts	1	3	3	0.98	25	11
Power Amplifier	Fused Fiber coupler	2	2	2	1.05	3	11
Master Oscillator	Fast Axis Collimator	2	2	2	1.05	**2**	11
Master Oscillator	Slow Axis Collimator	2	2	2	1.05	**2**	11

GROUP 3 METHODOLOGY

- The test plan for Group 3 components includes 100% functional testing.
- The plan also calls for Process Failure Modes and Effects Analysis (PFMEA) to ensure that our handling, testing, and installation processes do not introduce latent defects or damage.

4. Summary

- We are currently on track to meet the TRL6 plan for the MOPA Laser.
- We are in the process of selecting vendors for PA.
- We plan to transfer technologies to the industry for the flight lasers build
  - Request for proposal will be issued
  - Proposals will be evaluated and selection will be made
  - We will work with the selected vendor closely to transfer necessary technologies for building the flight lasers
  - We will perform acceptance testing on all deliverables prior to delivery to ESA