https://ntrs.nasa.gov/search.jsp?R=20180006596 2019-04-29T09:37:15+00:00Z

NASA Advanced Exploration Systems: 2018 Advancements in Life Support Systems

Caitlin E Meyer[1]
NASA Johnson Space Center, Houston, TX

Walter F. Schneider[2]
NASA Marshall Space Flight Center, Huntsville, AL

The NASA Advanced Exploration Systems (AES) Life Support Systems (LSS) project strives to develop reliable, energy-efficient, and low-mass spacecraft systems to provide environmental control and life support systems (ECLSS) critical to enabling long duration human missions beyond low Earth orbit (LEO). Highly reliable, closed-loop life support systems are among the capabilities required for the longer duration human space exploration missions planned in the mid-2020s and beyond. The LSS Project is focused on three life support areas: air revitalization, wastewater processing/water management and environmental monitoring. Building upon the International Space Station (ISS) LSS systems (where applicable), the three-fold mission of the LSS Project is to address discrete LSS technology gaps, to improve the reliability of LSS systems, and to advance LSS systems toward integrated testing aboard the ISS. This paper is a follow on to the AES LSS development status reported in 2017 and provides additional details on the progress made since that publication with specific attention to the status of the Aerosol Sampler ISS Flight Experiment, the Spacecraft Atmosphere Monitor (SAM) Flight Experiment, the Brine Processor Assembly (BPA) Flight Experiment as well as the progress of the terrestrial development in air, water and environmental monitoring technologies.

I. Nomenclature

°C	=	degrees Celsius
AES	=	Advanced Exploration Systems
Ag+	=	silver/silver ion
AOR	=	Advanced Oxygen Recovery
BPA	=	Brine Processor Assembly
C_2H_2	=	acetylene
CH_4	=	methane
CO_2	=	carbon dioxide
COTS	=	commercial-off-the-shelf
CSELS	=	Capillary Structures for Exploration Life Support
DAPS	=	Dynamic Adsorption Process Simulator
DGA	=	diglycolamine
DM	=	Development Module
DMSD	=	dimethylsilanediol
ECLSS	=	environmental control and life support systems
EVA	=	extravehicular activity
FY	=	fiscal year
H_2	=	hydrogen
HEPA	=	high-efficiency particulate air
I-level	=	intermediate-level
ISS	=	International Space Station
IWP	=	Ionomer-membrane Water Processor

[1] Deputy Project Manager AES LSS, NASA JSC, EC3, caitlin.e.meyer@nasa.gov
[2] Project Manager AES LSS, NASA MSFC, FP10, walter.f.schneider@nasa.gov

kg	=	kilogram
LEO	=	low Earth orbit
LSS	=	Life Support Systems
MABR	=	membrane aerated biological reactor
miniTOCA	=	miniature Total Organic Carbon Analyzer
mmHg	=	millimeters of mercury (unit of pressure)
MPa	=	megapascal (unit of pressure)
N_2	=	nitrogen
NASA	=	National Aeronautics and Space Administration
NDIR	=	nondispersive infrared
nm	=	nanometer
O_2	=	oxygen
OGA	=	Oxygen Generation Assembly
ORU	=	on-orbit replaceable unit
PPA	=	Plasma Pyrolysis Assembly
$ppCO_2$	=	partial pressure of carbon dioxide gas
ppm	=	parts per million
psi	=	pounds per square inch
psia	=	pounds per square inch, absolute
S.A.M.	=	Spacecraft Atmosphere Monitor
SBIR	=	Small Business Innovative Research
SCLT	=	System Leadership Capabilities Team
SCOR	=	Spacecraft Oxygen Recovery
SOA	=	state-of-the-art
TOC	=	total organic carbon
TOCA	=	Total Organic Carbon Analyzer
TRL	=	technology readiness level
TSA	=	Temperature swing adsorption
TTU	=	Texas Tech University
UPA	=	Urine Processor Assembly
VOC	=	volatile organic compounds
WPA	=	Water Processing Assembly

II. Introduction

THE Advanced Exploration Systems (AES) Life Support Systems (LSS) Project is focused on three technical development areas: atmosphere revitalization, wastewater processing/water management and environmental monitoring. Starting with the International Space Station (ISS) life support systems as a point of departure (where applicable), the mission of the LSS Project is three-fold:

1) Address discrete LSS technology gaps (Table 1)
2) Improve the reliability of LSS technologies
3) Advance LSS systems towards integrated testing on the ISS

This paper summarizes the work performed under the AES LSS Project from mid-2017 through mid-2018 to meet these objectives. Together, the three technical focus areas represent the entire LSS architecture for human spaceflight as is depicted in Fig. 1. Also provided are references to numerous other papers that go into greater technical detail on the technologies under development by the LSS Project.

For the past several years, the NASA Environmental Control and Life Support Systems (ECLSS) System Leadership Capabilities Team (SCLT) has identified the ECLSS capability gaps for long duration human missions both in microgravity beyond low Earth orbit (LEO) and for partial gravity on a planetary surface. These gaps are summarized in Table 1. The SCLT developed roadmaps laying out the plan to close these critical gaps between now and ISS end-of-life, presently slated for 2024 [1]. The LSS Project is working on closures to many of the capability gaps listed, as will be detailed in the remainder of this paper. Since the Gateway program was announced in 2017 [2], some of the gaps identified in Table 1 have been revised to account for human lunar surface missions with partial gravity or periods of intermittent dormancy. The ECLSS community is also focused on improving system reliability and main

tainability for long-duration missions, which are reflected in a shift away from on-orbit replaceable unit (ORU) level of maintenance and toward intermediate-level (I-level) maintenance of components. These goals are reflected through the mid-2018 work of the AES LSS program and will continue to be evident in future years.

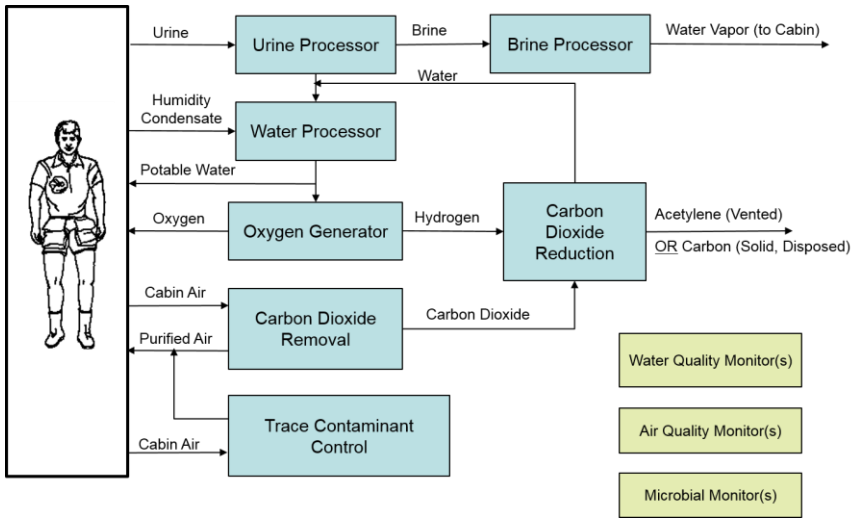

Fig. 1 Simplified LSS Schematic.

Table 1 ECLSS and Environmental Monitoring System Maturation Team Identified Capability Gaps [3]

Subsystem Functional Grouping	Function	Capability Gaps	Orion Short Duration µ-g	Long Duration µ-g	Long Duration Planetary Surface
Atmosphere Revitalization	CO_2 Removal	Improved reliability; $ppCO_2$ <2 mmHg (2600 ppm) (goal)		X	X
	Trace Contaminant Control	Replace obsolete sorbents with higher capacity; siloxane removal	X	X	X
	Particulate Filtration	Surface dust pre-filter			X
	Condensing Heat Exchanger	Durable, chemically-inert water condensation and collection with antimicrobial properties		X	X
	O_2 recovery from CO_2	Recover >75% O_2 from CO_2		X	X
	O_2 generation	Reduced size and complexity, more maintainable		X	X
	High-pressure O_2	Replenish 24.8 MPa O_2 for EVA; provide contingency medical O_2		X	X
Water Recovery and Management	Disinfection/ Microbial Control	Disinfection techniques and technologies for microbial control of water systems, dormancy survival	X	X	X
	Wastewater processing	Increased water recovery from urine (>85%), reliability, reduced expendables		X	X
	Urine brine processing	Water recovery from urine brine >90%		X	X
Waste Management	Metabolic solid waste	Low mass, universal waste management system	X	X	X
	Non-metabolic solid waste	Volume reduction, stabilization, resource recovery		X	X

Environmental Monitoring	Atmosphere monitoring	Smaller, more reliable major constituent analyzer, in-flight trace gas monitor (no ground samples), targeted gas (event) monitor	**X**	**X**	**X**
	Water monitoring	In-flight identification and quantification of species in water		**X**	**X**
	Microbial monitoring	Non-culture based in-flight monitor with species identification and quantification		**X**	**X**
	Particulate monitoring	On-board measurement of particulate hazards		**X**	**X**
	Acoustic monitoring	On-board acoustic monitor		**X**	**X**

III. Atmosphere Revitalization

The LSS Project's atmosphere revitalization task is comprised of work in carbon dioxide removal, oxygen generation/carbon dioxide reduction and trace contamination/particulate control. The current state-of-the-art (SOA) in atmosphere revitilazation includes CO_2 removal at $ppCO_2$ <4 mmHg and O_2 recovery >50% from CO_2 [3]. As was stated in Table 1, the LSS project is developing technologies in many of the following gaps, which have been identified by the NASA ECLSS community as necessary to enable human exploration beyond LEO:

- CO_2 removal: Improved reliability; $ppCO_2$ <2 mmHg (2600 ppm)
- Trace contaminant control: Replace obsolete trace contaminant control sorbents w/ higher capacity; siloxane removal
- Particulate filtration: Surface dust pre-filter
- O_2 recovery: Recover >75% O_2 from CO_2
- O_2 generation: Smaller, reduced complexity O_2; more maintainable
- High-pressure oxygen: Replenish 24.8 MPa (3600 psi) O_2 for EVA; provide contingency medical O_2

A. CO_2 Removal

NASA's Human Research Program has been investigating several issues related to the possible impacts of CO_2 levels on crewmember health, and has asked the ECLSS community to investigate options for achieving lower concentrations in future missions. Some ISS crewmembers have reported transient effects on their performance that in some instances may be associated with higher levels of CO_2 [4]. From the start of ISS habitation through 2012, the average CO_2 concentrations were between 3 and 4.5 mmHg. In order to reduce the rate of crew-reported headaches below 1%, a 2014 study concluded that the ambient one week CO_2 average concentration should be below 1.97 mmHg [4]. Reducing the $ppCO_2$ to less than <2 mmHg is therefore a technical goal. The LSS project is investigating multiple technology paths to close this capability gap, including liquid amine-based technologies and structured adsorbent technologies.

1. Liquid Amines

Liquid amines are being pursued as an alternative to the current SOA for CO2 removal on ISS that utilizes packed bed adsorption technology. Liquid amines offer the potential advantage of being low power, low mass, and highly reliable [5]. Liquid amines have been used aboard submarines for decades in direct-contacting absorption columns and were considered by NASA as early as the 1970s [6]. However, liquid amines face challenges associated with chemical stability (oxidation and irreversible reactions) and liquid containment in microgravity. The LSS Liquid Amines task is pursuing an aqueous diglycolamine (DGA) solution, which possesses a lower vapor pressure than its military counterpart monoethanolamine, with low viscosity and reasonably fast kinetics compared to comparable commercial amine chemisorbents [6] [5].

This year's work within the Liquid Amine task has been to assess the toxicological effects of DGA and the potential impacts of a spacecraft environment on their performance. The Liquid Amine team has also demonstrated several liquid-to-air contactor designs that demonstrate CO2 adsorption within a capillary-driven fluid array. The successful implementation of this technology relies on the direct contact between the bulk process air flow and the liquid amine in microgravity. This contacting scheme must be demonstrated to provide adequate bulk process fluid contact and

contain the liquid amine in microgravity. Additionally, the team has developed a detailed adsorbent process model for DGA, to aid in the design of an air-liquid CO2 contactor (Fig. 2b). In fiscal year (FY) 2019, the team will continue to anchor the model with laboratory test data, as well as develop the regeneration component, with a goal of modeling the overall system design. With this emphasis on modeling, the project has relied on the results of the Capillary Structures for Exploration Life Support (CSELS) ISS flight experiment. Launched in 2017, the CSELS suite contains Capillary Sorbent Experiment and Demonstration hardware. Included are CO2 adsorption and desorption analogs that are designed to partition fluid into channels and recollect the fluid at the end of a wedge (Fig. 2a). Portions of the CSELS experiment were performed in 2017 and the remainder, including much of the Sorbent experimental content will be performed in the future, as crew time and ground support become available [7].

Fig. 2

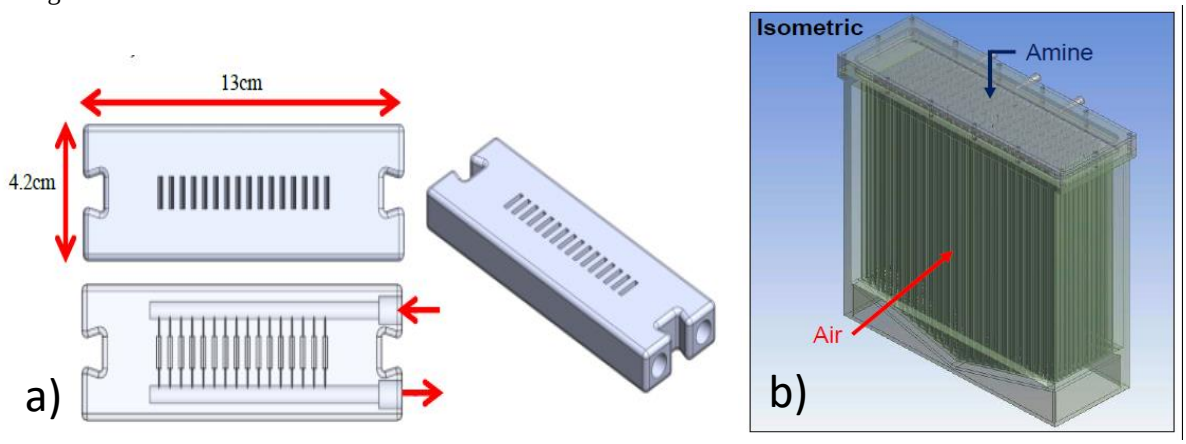

Fig. 2 a) CSELS Capillary Sorbent contactor design with overall dimensions of 13cm by 4.2cm by 1.6cm thick. Sixteen parallel channels are fed by a 0.5cm diameter inlet manifold that is mirrored at the outlet [7]; b) CAD image of a Liquid Amine contactor for CO_2 adsorption using 12 wedges per side per row [8]

2. Structured Sorbents

The Structured Sorbents task intends to design a temperature swing adsorption (TSA) process that utilizes a structured 13X zeolite sorbent, ideally as a replacement for the 4-Bed CO_2 Scrubber zeolite adsorbent bed. The 4-Bed CO_2 Scrubber is a carbon dioxide removal system intended for demonstration on ISS in 2020 [9]. Structured adsorbents, when compared to packed beds, have lower pressure drop, higher mass transfer rates, resist fluidization and demonstrate improved thermal management. In FY2017, the team recommended that a structured sorbent comprised of metal foils coated in CO_2 adsorbent media, developed by Catacel (Ravenna, OH), was the most promising design. In FY2018, University of South Carolina conducted simulations using their Dynamic Adsorption Process Simulator (DAPS), demonstrating that that there exist bed and system design characteristics that can mitigate in the daily CO_2 generation rate (4.16 kg/day). In test, a Catacel structured sorbent demonstrated slightly less CO_2 removal rates than 4 kg/day of 2630 ppm CO_2 using a high temperature of 170°C, a low pressure of only 0.4 psia and a rather slow cool down rate. These positive results show that the notion of a structured sorbent as a drop-in bed replacement for 4-Bed CO_2 Scrubber is possible [9]. The LSS project plans for continued technological investment in FY2019.

B. Oxygen Generation/Carbon Dioxide Reduction

Oxygen (O_2) generation on the ISS is performed by using water electrolysis to separate the hydrogen and oxygen atoms to yield molecular O_2 and hydrogen (H_2). The oxygen is released to the cabin air, while the hydrogen is vented overboard. While this is suitable in LEO, there are several efficiencies required to close the life support loop for long-duration space exploration. For example, hydrogen capture can be used to chemically reduce CO_2, ultimately creating more water via the Sabatier reaction. That water can be electrolyzed via the ISS Oxygen Generator Assembly (OGA), producing higher oxygen recovery.

Recognizing that multiple paths exist to increase oxygen recovery and close the life support loop, the LSS project has made significant investment in several O_2 generating and CO_2 processing technologies. Among them are the Plasma Pyrolysis Assembly (PPA), Spacecraft Oxygen Recovery (SCOR) technologies, high-pressure/high purity water electrolysis and medical oxygen. If the technologies are successfully developed and show benefits to future missions in trade-studies, they may be demonstrated on the ISS, either as stand-alone tests to assess operation in microgravity or fully integrated with the existing ISS systems.

1. Plasma Pyrolysis Assembly

The PPA is a methane post-processor that aims to achieve a higher recovery of oxygen from carbon dioxide. As shown in Eq. (1), the Sabatier reaction combines CO_2 with H_2 to produce methane (CH_4) and water. On ISS, CH_4 is vented overboard. However, in order to close the ECLSS loop, it can be partially pyrolyzed in a plasma microwave reactor to form H_2 and acetylene (C_2H_2) as shown in Eq. (2). However, secondary methane reactions also occur, resulting in a mixed effluent stream containing hydrogen, unreacted methane, acetylene and trace quantities of water vapor, carbon monoxide (CO), ethylene (C_2H_4), ethane (C_2H_6), and solid carbon [C(s)] [see Eqs. (3-5)]. From this product stream, the separated hydrogen can be recycled to the Sabatier reactor to reduce more CO_2 and produce additional water which can be electrolyzed to yield O_2. In a PPA architecture, the C_2H_2 gas is vented overboard. The total theoretical oxygen recovery from metabolic CO_2 using the Sabatier reaction and CH_4 post-processing is approximately 90% with a realistic recovery of approximately 85% [10].

Sabatier Reaction:	$CO_2 + 4H_2 \leftrightarrow CH_4 + 2H_2O$	(1)
Targeted PPA Reaction:	$2CH_4 \leftrightarrow 3H_2 + C_2H_2$	(2)
CH_4 conversion to Ethane:	$2CH_4 \leftrightarrow H_2 + C_2H_6$	(3)
CH_4 conversion to Ethylene:	$2CH_4 \leftrightarrow 2H_2 + C_2H_4$	(4)
CH_4 conversion to solid carbon:	$CH_4 \leftrightarrow 2H_2 + C(s)$	(5)
CO Production:	$C(s) + H_2O \leftrightarrow CO + H_2$	(6)
CO Production:	$CH_4 + H_2O \leftrightarrow CO + 3H_2$	(7)

In 2018, the test bed was configured to connect the hydrogen separator to the Plasma Pyrolysis Assembly (PPA). Fig. 3 shows the proposed exploration ECLSS architecture that incorporates PPA. As discussed above, the hydrogen separator is a critical component of the assembly, needed to separate the PPA-effluent into pure hydrogen for return to the Sabatier reactor. The current separator employs an electrochemical cell stack produced by Skyre (formerly Sustainable Innovations of East Hartford, CT) and delivered to NASA in October 2017. In 2018, testing was conducted at Marshall Space Flight Center (MSFC) of both the PPA and Hydrogen Separator architecture and also integrated with a developmental ground Sabatier assembly. In summer 2018, the PPA team identified several improvements to the electrochemical membrane, necessary for maximizing hydrogen transport and minimizing C_2H_2 hydrogenation. Additionally, improved sealing techniques were suggested. Accordingly, Skyre is working to improve the electrochemical hydrogen separator design, with a goal of achieving at least 85% hydrogen recovery from a nominal PPA effluent stream based on four crew member metabolic CO_2 production. Furthermore, work is on-going to improve the cell-stack sealing design in an effort to minimize all undesirable leak paths (e.g. cross-cell leakage, leakage out of the stack, etc.) and total pressure drop [10].

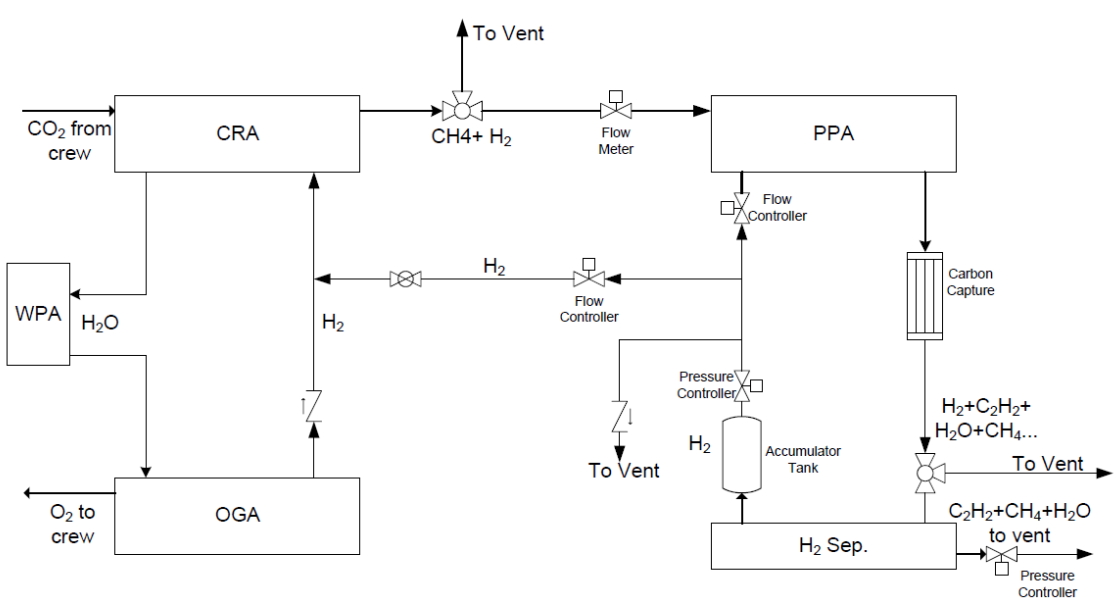

Fig. 3 Proposed PPA Architecture [10]

In parallel, Umpqua Research Company (Myrtle Creek, OR) is developing PPA's microwave reactor chamber, which provides the conditions for the methane plasma pyrolysis in Eq. (2). In late 2018, Umpqua will attempt to validate their computer modeled predictions for the effects of microgravity on the PPA plasma following a reduced gravity parabolic flight in November 2018 [11].

2. Spacecraft Oxygen Recovery (SCOR)

In parallel to the development of the Sabatier/PPA/OGA architecture for recovering greater than 75% oxygen from carbon dioxide, AES LSS is investigating how the Bosch process might be employed in future closed-loop ECLSS architectures. The Bosch process, Eq. (8) has been considered by NASA since the 1960s and is theoretically capable of recovering 100% of the O_2 from metabolic CO_2. Bosch technologies catalytically react ambient CO_2 and, with the H_2 by-product from water electrolysis, produce solid carbon and water. The water may be recycled to produce additional O_2 [10].

Bosch process:

$$CO_2 + 2H_2 \leftrightarrow 2H_2O + C(s) \tag{8}$$

During fiscal year 2018, the Umpqua Carbon Formation Reactor (CFR), developed under the Space Technology Mission Directorate (STMD)-sponsored Advanced Oxygen Recovery (AOR) Phase I task, was tested with the NASA-developed Reverse Water Gas Shift (RWGS) reactor. The intent of the testing was to show if system performance is improved by combining components that were independently developed under different programs. Prelminary test data analysis indicates good CO_2 conversion. These testing results will be compared to the previously-reported pH Matter CFR testing [12] and NASA's Bosch Batch Carbon Formation Reactor before considering future funding.

The second and third investments are part of a STMD-sponsored Game Changing Development Phase II solicitation for Spacecraft Oxygen Recovery technologies maturation activity, which was the follow on to the AOR Phase I activity. The two awardees are Umpqua and Honeywell Aerospace (Phoenix, AZ). Honeywell is advancing their technology entitled "Methane Pyrolysis System for High-Yield Soot-Free Recovery of Oxygen from Carbon Dioxide." Umpqua was selected to advance their "Continuous Bosch Reactor" technology. The work began in September 2017 and upon completion, AES LSS will conduct a performance comparison of all three technologies before considering future funding.

3. High Pressure Oxygen

The primary application of high-pressure oxygen will be extravehicular activity (EVA) support, particularly when the missions are surface missions. However, other applications may include cabin pressure control, medical, and nominal metabolic needs, depending upon the oxygen generation and supply architecture best suited for the mission. One solution to achieve high purity oxygen at 3600 psi is high-pressure water electrolysis. This year, the High Pressure Oxygen task team has prepared to evaluate three candidate high-pressure oxygen systems at White Sands Test Facility (WSTF). The test articles include 1) a 5-cell stack high-pressure water electrolysis unit from Proton OnSite (Wallingford, CT), 2) a high-pressure electrochemical oxygen compressor coupled with a low-pressure water electrolysis unit from Giner (Newton, MA) and 3) a 4-cell high-pressure water electrolysis stack from Giner. Testing is planned to start in 2019 and the project is planning to evaluate all candidates at the conclusion of testing before considering high pressure water electrolysis for future funding and investment.

4. Medical Oxygen and Other Technologies

Oxygen solutions are also needed for medical operations, in the unlikely event of a medical emergency far from Earth. This year, AES LSS began identifying potential commercial-off-the-shelf (COTS) solutions for medical oxygen delivery. Ultimately, the team procured a COTS concentrator and a COTS ventilator system. In parallel, LSS has begun to identify operational requirements for the systems that will help provide for beyond-LEO crew health and survival. In the upcoming year, the project will begin to test the potential system terrestrially, while considering whether a flight demonstration is necessary as a microgravity performance evaluation.

In addition to the work above, AES LSS is continuing to identify and mature low technology readiness level (TRL) technologies for high-pressure oxygen delivery. One such effort begun this year is to evaluate the potential for solid-state ceramic oxygen compression. This potential architecture would use low-pressure water electrolysis to generate oxygen, followed by drying and purifying step(s). Subsequently, oxygen compression could be achieved via a solid-state ceramic oxygen compressor to high-pressure. Notionally, oxygen may be scavenged from a source stream and electrochemically pumped through a high-temperature tubular ceramic membrane to high-pressure, with no moving or flammable components. Viability and risk will continue to be assessing in the upcoming year.

C. Trace Contaminate and Particulate Control.

Trace contaminate and particulate control are critical for crew health and safety. On-board ISS, the state-of-the-art trace contamination control equipment has performed as expected. However, the activated charcoal and catalyst used in the system is commercially obsolete and beyond-LEO exploration requires equivalent or better-performing replacements. Ammonia is a limiting contaminant in the life of a trace contaminant system, and LSS is investigating candidate materials to use in place of the obsolete ISS granular activated carbon bed, containing Barnebey-Sutcliffe (B-S) Type 3032 impregnated carbon [13].

Testing in 2017 and 2018 to determine the best adsorbents resulted in the selection of Chemsorb® 1425 and Ammonasorb II for ammonia control. For volatile organic compound (VOC) removal, Calgon 207C, Calgon OVC, Cabot Norit RB2, and Cabot Norit GCA 48 were selected. In 2018, these sorbents were compared to the ISS SOA, B-S Type 3032. At low ammonia concentrations, typically 2 ppm to 10 ppm, testing showed Chemsorb® 1425 and Ammonasorb II sorbents have similar performance to each other and exceed the B-S Type 3032 capacity by ~66%, which suggests that these potential exploration mission replacements may reduce mass and prolong contaminant control system service life [13]. For VOCs, Calgon 207C, Calgon OVC, Cabot Norit RB2, and Cabot Norit GCA 48 were tested against Barnebey-Cheney Type BD. Test results ranks the Cabot Norit GCA 48, Calgon 207C, Calgon OVC, Cabot Norit RB2, Barnebey-Cheney Type BD, and then B-S Type 3032 [14].

The LSS Project is also investigating new configuration and packaging ideas for a trace contaminant control system that is smaller and easier to maintain. Based on testing, a Microlith®-based catalytic oxidizer and a high flow/low aspect ratio adsorbent cylindrical bed are the basis for a test bed to be built to for integrated testing of a trace contaminant system for future space missions. Testing will be performed in FY2019 [15] [16].

In additional to chemical air quality, filtration is necessary to ensure astronauts do not inhale particulates in the cabin atmosphere. Aboard the ISS, High-Efficiency Particulate Air (HEPA) filters are used to remove particulate matter from the cabin atmosphere. The HEPA filters used aboard the ISS for particulate filtration are replaced periodically. Between replacements, the inlet screens at each filter element location are cleaned with a vacuum cleaner. To reduce logistics and crew maintenance time, the LSS Project is developing a scroll Bacterial Filter Element (BFE). The filter system scrolls filter media across the intake duct, thereby allowing the filter to provide clean media without the need for vacuuming. Additionally, the more efficient packaging of the filter media reduces logistics by allowing for more equivalent filter media to be packaged in this design as compared to the ISS HEPA filters [17]. This past year, a scroll BFE was developed within the ISS HEPA filter form factor and is currently undergoing testing [18]. The scroll BFE includes three filtration stages: a screen roll filter, a regenerable impactor filter, and a scroll media filter. This scroll BFE filter is intended for a technology demonstration on the ISS in 2021. The design under evaluation is slightly taller than the ISS BFE due to the mechanical features associated with regenerating the filtration stages. The filter development team is continuing to evaluate filtration media for the scroll media filter stage, improve the mechanical components and, work on reducing the filter height. The LSS Project plans to propose a flight demontration to the ISS program once the form factor violations can be quantified.

Finally, LSS is investigating the suspended particulate environment aboard the ISS to aid in future filtration system performance specifications [17]. To understand the particulate environment the LSS Project has flown an experiment to collect particles at ISS HEPA filter locations (see Section V.B). The results of this experiment may inform the design for filtration system designs.

IV. Wastewater Processing and Water Management

A major goal of the LSS Project is to develop water recovery systems to support long duration human exploration beyond LEO. Current ISS wastewater processing and water management systems distill urine and wastewater to recover water from urine and humidity condensate in the spacecraft. The ISS system achieves 85% water recovery from urine using phosphate-based urine pretreatment in the US-segment [19]. Disinfection is accomplished using iodine on the US segment and brine water recovery has not yet been established (see Section IV.B). As was stated in Table 1, the LSS project is developing technologies in many of the following gaps, which have been identified by the NASA ECLSS community necessary to enable human exploration beyond LEO:

- Disinfection: Development of disinfection techniques and technologies for microbial control of water systems and dormancy survival
- Water quality monitoring: In-flight identification and quantification of species in water
- Urine brine processing: Water recovery from urine brine >90%, enabling 98% total water loop recovery
- Wastewater processing: Increased water recovery from urine (>85%), reliability, reduced expendables

A. Silver Biocide for Disinfection

AES LSS is developing silver biocide technology to identify methods for adding biocidal silver to in-flight potable water for disinfection. There is typically a gap in time between wastewater generation activities (showers, urination, and hygiene), wastewater reclamation and potable water consumption. Disinfection is necessary during processing, as well as during periods of storage before use. With the advent of the Gateway program, disinfection technologies must also control/inhibit microbial growth for periods of intermittent dormancy, potentially months at a time [2] [3].

Biocidal silver (Ag+) was suggested as the future potable water disinfection method based upon its historical use in the ISS Russian-segment, as well as the health of crew [20]. The ISS US-segment utilizes iodine for disinfection, which is unhealthy for crew and needs to be removed prior to consumption [21]. Low concentrations of silver (<500 μg/L) have been shown to kill bacteria in water systems and maintain potability. Silver would not require point-of-use removal from a water system prior to consumption, and therefore could require fewer consumables than the ISS SOA. The challenge in developing a new disinfection architecture is multi-faceted: In order to develop a silver biocide architecture, LSS must develop a dosing system, demonstrate monitoring (potentially with feedback control) and prevent deposition [22].

In 2017 through mid-2018, the Silver task team evaluated several COTS electrode dosing systems. During the evaluation, which included attempts at disassembly, the two commercially available systems were notably heavy, required regular maintenance, recalibration and, in one case, the electrodes were not individually replaceable, which could lead to cost-prohibitive on-orbit sparing. Ultimately, the team concluded that design drivers for COTS electrodes differ from those driving long-duration exploration missions and that the evaluated COTS systems are not viable for the needed application. Some work is underway to evaluate whether there are requirements and design commonality among COTS electrodes designed for maritime use. The team is also designing a test rig to facilitate testing of two in-house-designed silver electrodes. This testing, intended for late 2018, will vary several process parameters aimed at generating silver ions and minimizing silver nanoparticles. Finally, the project is tackling the deposition challenge and attempting to find coatings or other means of prolonging the life of silver in solution. In late 2018, the project will attempt to replicate various surface coatings or pre-washes purported in literature to prevent silver loss due to chemical interaction with the spacecraft pipe and vessel walls.

Following completion of this testing, a flight-forward design will be completed, built and tested. In parallel, systems analysis is being performed to ensure the system being developed can be used across all platforms and to fully understand the system-, architectural-, and mission-level implications of moving to all silver-based disinfection systems. In order to support exploration milestones, including the potential need to test a silver biocide dosing system on station, early feasibility testing and analysis will continue under the LSS project through the 2020 timeframe.

B. Brine Processing

Recovery of potable water from wastewater is essential to the success of long-duration human spaceflight. For human missions to Mars, NASA's objective is to recover at least 40% with a goal of >90% of the water from urine brine. The current SOA for urine water recovery is 85% using phosphate-based urine pretreatment on-board the ISS US-segment [19]. Eighty-five percent is approaching the limit of the ISS Urine Processor Assembly (UPA)'s distillation capability and the remaining water is contained within the urine brine effluent of the UPA. Accordingly, AES LSS began the development of a urine brine post-processor in 2015. Building upon the work done under NASA's Small Business Innovation Research Program, the LSS Project is working with Paragon Space Development Corp. (Tucson, AZ) to develop the Ionomer-membrane Water Processor (IWP) brine processor for flight demonstration on the ISS in 2019 [23].

Paragon's IWP (also known as the Brine Processor Assembly, BPA, within NASA) utilizes forced convection of dry, heated, spacecraft cabin air coupled with membrane distillation to purify and recover water from urine brine [12]. The water vapor generated is released from the BPA into the cabin environment where it is collected and condensed by the existing spacecraft condensing heat exchanger(s). The water enters the ISS Water Processing Assembly (WPA) and is polished alongside crew urine distillate for eventual consumption as potable water. The bladder provides the containment of the fluid made toxic from the urine pretreatment chemicals, as well as the technology by which water is recovered from the brine. The bladders are composed of two layers. The inner layer is a microporous, hydrophobic membrane, which allows water vapor and other volatiles to transit through the membrane while retaining liquid and solids. The outer layer is Nafion, which is selectively permeable to water vapor while retaining volatile organic carbons (VOCs) and other contaminants inside [24].

In the past year, the BPA finalized the flight experiment design, held a critical design review and began manufacturing. Several notable project milestones were met, including the start of long-term compatibility testing to demonstrate that the BPA bladder materials will retain mechanical strength in contact with brine, which is extremely acidic. The test simulates storage of post-dewatered brine for up to 8 months, which mimics a conservative interval between

opportunities for ISS trash vehicles. Additionally, the project overcame a technical design challenge related to Nafion heat-sealing. Following the procurement of several bladder prototypes which failed to pass their workmanship pressure screen, Paragon moved manufacturing of the outer bladder to a new vendor with a more reliable and repeatable heat-sealing process. Full-scale prototypes were procured, passing leak and proof pressure testing, allowing the project to move to critical design review.

Fig. 4: Prototype BPA testing at Paragon in Tucson. a) Prototype assembly; b) Brine-filled bladder installed in the detrusor; c) Condensate collection during a prototype dewatering test [24]

During prototype testing (see Fig. 4), a new bladder demonstrated 54% recovery of water from phosphor-chromic brine by volume in 8.1 days (which correlates to 65% mass recovery of initial water in brine, see Fig. 5). Overall, this test achieved 63% by volume recovery in 12.2 days (76% mass recovery of initial water in brine) [24]. A driving requirement for the BPA is to perform a dewatering cycle within 26 days. Future qualification testing of the BPA will confirm that the experiment design will exceed its water recovery requirement (to demonstrate >40% water by volume) well within a 26 day period [25]. In the remainder of 2018, the project will manufacture the flight assembly. The following year, the hardware will undergo qualification testing and be delivered to NASA for launch in October 2019.

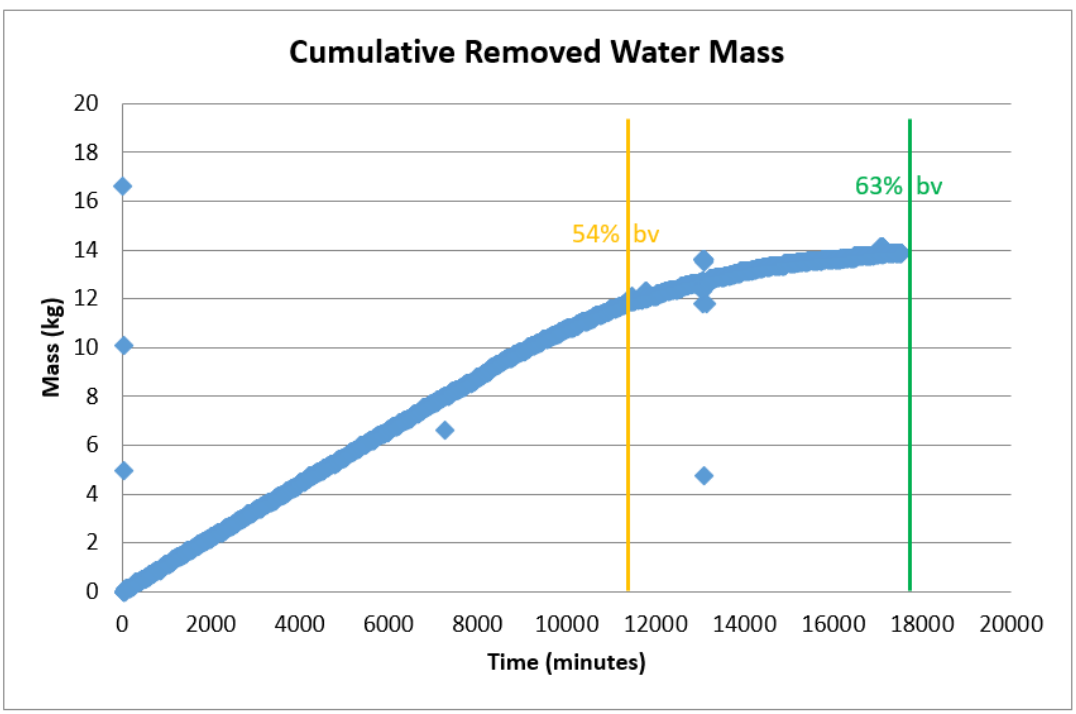

Fig. 5: Water removal profile for a Paragon dewatering test with a re-designed prototype bladder, January 10, 2018 [24]

C. Biological Water Processor with Texas Tech University

AES LSS is engaged with Texas Tech University (TTU) on a three-year study that sought to inform the design, operation, performance, and integration of a biological wastewater reactor (bioreactor) into a holistic wastewater recycling system. Building upon years of work in biological treatment of space-based wastewaters, TTU is focused on demonstrating that three membrane aerated biological reactor (MABR) systems in various forms (single-stage oxic, two-stage aerobic and anoxic, and single-stage, low-pH aerobic) are capable of producing well-treated, stable effluent. In general, systems removed ~90% of organic carbon, up to 50% of total nitrogen and converted >50% of organic nitrogen to mineralized forms [26]. The focused goal of this work is to determine the optimum biological reactor configuration, incorporating volume, mass, energy, consumables, offsetting products, complexity and reliability.

In 2018, TTU has begun developing a preliminary design for a biological reactor flight experiment, intended to advance biological treatment in micro- or partial-gravity and provide critical information for future trade studies and in future development efforts. Flight experiments will be needed to demonstrate that MABR bioreactors will properly start up in microgravity, perform and function in microgravity, and perform and function with actual spacecraft wastewater. Furthermore, TTU is attempting to demonstrate that a MABR bioreactor can be inoculated, started, and develop normal biofilm in a relevant time period with stored inoculum in microgravity. Accordingly, in FY2018, the team has begun developing a method for long-term inoculum storage with an accompanying start-up procedure for an MABR flight experiment. The final results of both these efforts will be presented to the LSS project in December 2018.

As part of the continued maturation of their terrestrial systems, TTU performed on-going experiments throughout the year, varying the influent wastewater composition and production regime for both aerobic and anoxic conditions in a single-stage, rectangular MABR. The single-stage, rectangular reactor had been operational for nearly three years, providing valuable data to NASA on the reliability and robustness of MABRs, as well as the reactor life span and impact of reactor age on performance, membrane function and durability. In addition to their single-stage rectangular reactor, TTU also designed and operated a dual-stage reactor system, employing a MABR and a packed bed reactor for nitrification and denitrification, respectively. The dual-stage system performance will be compared to the single stage reactor, including transformation efficiency and chemical reaction rates, as part of an eventual reactor design down select, as biological treatment aims to provide an alternate micro- or partial-gravity alternative to physiochemical distillation for wastewater reclamation. This year's work demonstrated that more efficiently-packed rectangular reactors (Fig. 6) are capable of similar performance compared to their cylindrical counterparts. Furthermore, varying the production regime may yield simpler overall systems, by eliminating the need for a pre-processing holding tank and reducing the mechanical systems design, requiring only a recycle tank [27] [26] [28].

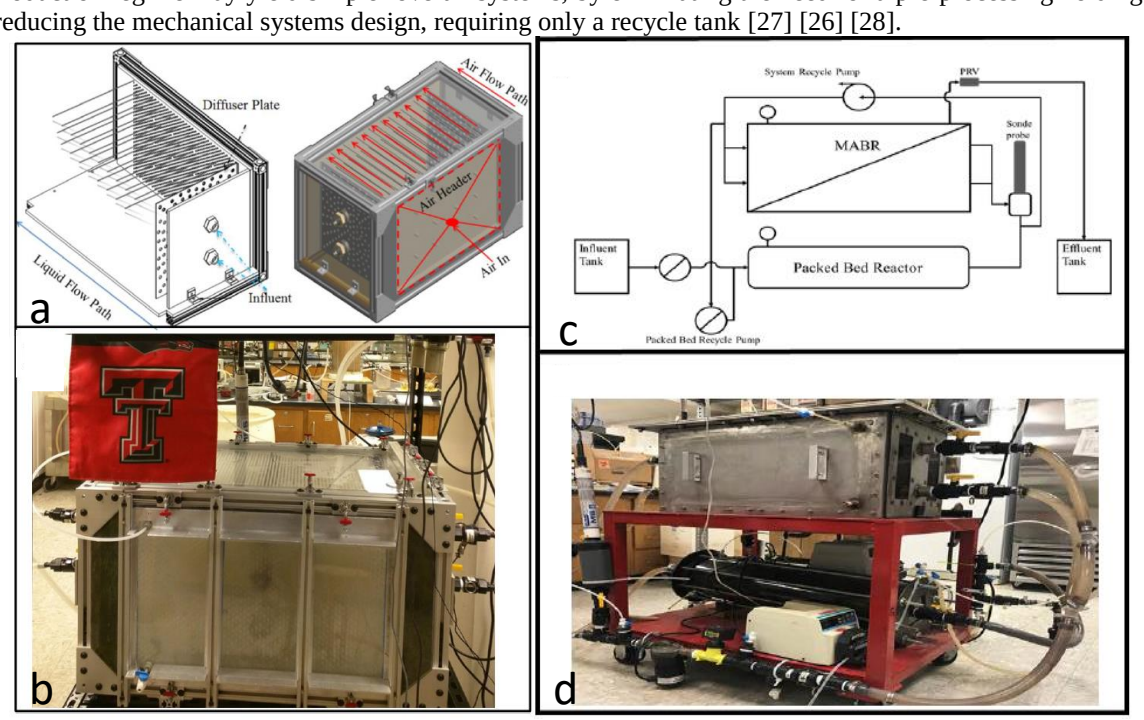

Fig. 6 A) Schematic of single-stage, rectangular MABR; B) Single-stage, rectangular MABR prior to operation [28]; c) Schematic of the dual-stage MABR, including a packed bed reactor and d) Schematic of the dual-stage MABR in the TTU lab [27] [28]

Finally, leveraging the institutional knowledge gained through years of biological water reclamation, TTU is investigating the issues and synergies related to the integration of bioreactors with a plant growth system. Integration of the bioreactor with plant growth systems offers numerous synergies, such as the capability to convert waste organics in liquid waste streams, including volatiles in humidity condensate to CO2 for plant growth, while producing a stable solution that can more easily be desalinated for reuse. MABR effluent also contains substantial nitrogen and phosphorous in usable forms and could be used directly to supplement growth solutions. Finally, the bioreactor could be used to recover nitrogen gas for the cabin atmosphere. The results of this effort will be presented to the LSS project in December 2018.

V. Environmental Monitoring

Environmental monitoring is a necessity for an enclosed habitable environment. On-board the ISS, environmental monitoring is accomplished using near real-time monitoring and archival methods. The former employs instruments located on board the ISS while the latter collects samples that are delivered to terrestrial laboratories for analysis. Obviously, long-duration environmental monitoring of air and water systems must be self-sufficient, self-contained and cannot depend on delivering samples to ground-based laboratories. As was stated in Table 1, the LSS project is developing tech-nologies in many of the following gaps, which have been identified by the NASA ECLSS community neces-sary to enable human exploration beyond LEO:

- Atmosphere: Smaller, more reliable major constituent analyzer, in-flight trace gas monitor (no ground samples), targeted gas (event) monitor
- Water: In-flight identification & quantification of species in water
- Microbial: Non-culture based in-flight monitor with species identification & quantification
- Airborne Particulates: On-board measurement of particulate hazards

A. Major Constituent Analyzer/Trace Gas Monitor

On-board ISS, the state-of-the-art in cabin atmosphere monitoring is the Major Constituent Analyzer and the Air Quality Monitor. Together, these monitors measure major constituents (N_2, O_2, CO_2, CH_4, H_2 and water vapor) and trace volatile organic compounds (VOCs) and are not optimized for the mass and volume restrictions that will accompany an exploration mission [29] [30]. LSS's goal is to develop smaller, more reliable monitors with in-flight analysis capability that no longer rely on terrestrial sampling for additional analyses or verification. The LSS Project is working on the Spacecraft Atmosphere Monitor (S.A.M.), a miniature gas chromatograph/mass spectrometer (GC/MS) system capable of real time measurement of major constituents and trace volatile organic compounds in a single analyzer (see Fig. 7). The development of a miniature GC/MS for use in SAM allows for a small size (22.2 cm × 24.1 cm × 19.1 cm), low mass (9.5 kg, including consumables), and low power (34 watts) monitor. The SAM is designed to provide data via Ethernet or wireless [31].

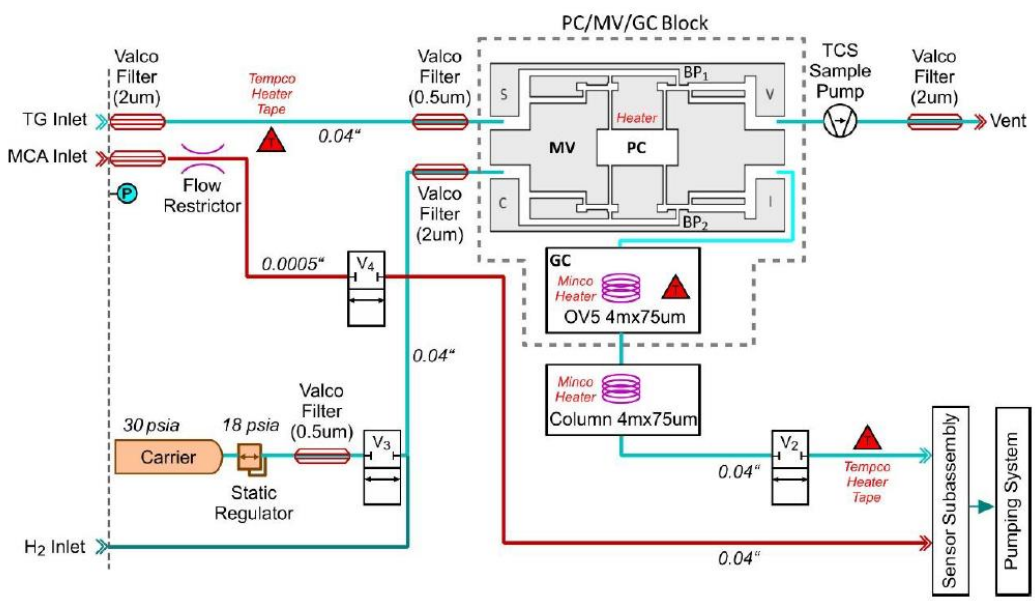

Fig. 7 Functional Block Diagram of the S.A.M. [31]

The SAM is planned to fly as a technology demonstration aboard the ISS in 2019. S.A.M. will be mounted in an Expediting the Processing of Experiments to the Space Station (EXPRESS) Rack in a single locker volume. The SAM can be removed from the locker and located anywhere in the ISS to perform location-specific monitoring. In the past year, NASA's Jet Propulsion Laboratory completed manufacturing of the Development Module-1 (DM-1). In summer 2018, DM-1 was sent to the Marshall Space Flight Center for closed chamber testing of both the major constituent and trace gas capabilities. The intent of the challenge was to demonstrate the end-to-end functionality and performance of DM- 1, which represents approximately 90% of the intended functionality of the flight assembly. The DM-1 successful detected all the constituents defined in the test objectives, with results intended for publishing in 2019. Development Module-2 (DM-2) is undergoing assembly and incorporates lessons from the DM-1 development. DM-2 testing is expected to be completed in early 2019, including closed chamber testing. Manufacturing of the Technology Development Unit (TDU) that will fly on the ISS has begun. Delivery is planned for early March 2019 [31].

B. Measurement of Particulate Hazards

Aerosols behave differently in microgravity than on earth. Some ISS crewmembers have complained of nose and eye irritation which may be attributed to suspended particulate matter and dust, as well as allergies. These complaints indicate the increased potential for inhalable particulates, defined as ≤10 micrometer in diameter. In order to quantify the particulate load in the cabin atmosphere aboard the ISS and satisfy the need for an on-board measurement of particulate hazards identified in Table 1, LSS has funded the Aerosol Sampler flight experiment to provide data on quantity, size, and composition of particles in ISS cabin atmosphere. LSS has previously reported on the development of the passive and active aerosol samplers, both obtained from the RJ Lee Group (Monroeville, PA). The Active Sampler (Fig. 8) is the COTS TPS100™ Personal Nanoparticle Sampler, optimized to collect particles from 10 nm to 250 nm in diameter. The Passive Sampler is the University of North Carolina Passive Aerosol Sampler (UNC-PAS) and is designed with five separate sampling substrates that would be exposed for different durations (2 days, 4 days, 8 days, 16 days and 32 days) and located on the ISS HEPA filters (to aid in deposition in the absence of gravity), with the expectation that one of the time domain samplers will have optimal particle coverage for microscopic analysis [32].

Fig. 8 Active (left) and Passive (right) samplers deployed in Node 3 aboard ISS [32]

An extensive data analysis from the ISS flight operations in December 2016-January 2017 was performed this past year. Compositions of the particles was evaluated with the goal of attempting to understand the source. Some notable results include a majority (33%) concentration of aluminum, chlorine, and zirconium particles on one Node 3 passive sampler, followed by 9% of overall particles containing iron, chromium, and nickel. The composition and abundance of these particles are hypothesized to be the result of crew hygiene activities (i.e. applying deodorant and changing clothes, releasing aluminum deodorant particles into the air) and crew exercise (stainless steel particles generated by metal exercise equipment), respectively. The active samplers yielded less particles overall when compared to the passive samplers, though the sampling time was limited due to the battery life of the unit [33].

The aerosol sampling experiment was repeated in summer 2018, with an emphasis on longer deployment times for the active samplers, including recharging the batteries during the experiment. Passive sampler re-flight provides additional data by which to identify more particle emission sources. Future passive samples will also provide a comparison of airborne pollutants collected 18 months apart. In addition to a second experiment, the team plans to conduct

a biological analysis of some recovered particles. These data will also inform requirements for particulate control in future spacecraft [33].

Based on the results from the December 2016-January 2017, flight requirements for a real time particulate monitor were developed and Aerosol Dynamics (Berkeley, CA) was awarded a contract to develop a real time particulate monitor. This monitor is planned for flight and ISS demonstration in 2020.

C. MiniTOCA

Monitoring the concentration of total organic carbon (TOC) in water is a baseline requirement for maintaining crew health during use of regenerative potable water systems [34]. Since the identification of dimethylsilanediol (DMSD) as the culprit for high TOC concentrations in the ISS WPA product water and the subsequent investigation into the ensuing effects [35], NASA has relied upon the ISS Total Organic Carbon Analyzer (TOCA) to quantify TOC in ISS product water quality for both toxicity awareness and system health and performance. However, this device is not configured in a mass and volume form factor most suitable for long-duration missions. For future missions, a TOC analyzer will need to perform reliably, efficiently, with limited or no consumables requiring resupply and at a lower mass/volume envelope when compared to the ISS SOA. Last year, AES LSS began developing the requirements for an exploration TOCA, called MiniTOCA [36].

In order to meet the derived requirements, the MiniTOCA project team spent the year engaged in a commercial technology review. They concluded that there did not exist a single, commercially available analyzer that would meet all the requirements, especially those requirements levying gravity independence, restricting hazardous acids and chemicals or limiting high temperatures. As a result, the search shifted to a component-level research and development approach, focused on oxidation and detection methods separately. As shown in Fig. 9, there is not a clear leader when compared to the TRL 5 solution of electro-chemical oxidation with nondispersive infrared (NDIR) detection, which represents the design of the ISS SOA. As a solution for the technical design for MiniTOCA, this design is hampered because it requires an acid buffer which may prevent analysis waste water from being returned to the potable water bus, adversely impacting the overall water loop [36].

For the remainder of 2018 and on, LSS will be attempting collaborations with industrial, small business or university partners. Concurrently, the project will continue to gather feasibility data, procure and evaluate technologies, and strategically down select promising technologies for additional investigation. At this stage, testing is focused on UV oxidation, membrane conductometric detection of CO_2, and electrolytic acidification and separation of inorganic carbon species. This architecture leverages low sample volume, minimal mass/volume, long-life, no consumables and meets the analytical performance requirements, while eliminating hazardous reagents. Beyond 2019, forward work is needed to refine MiniTOCA requirements, build a breadboard analyzer, and demonstrate performance. With successful breadboard performance, the project intends to design, certify, and deliver a technology demonstration instrument for operation on the International Space Station in the next decade.

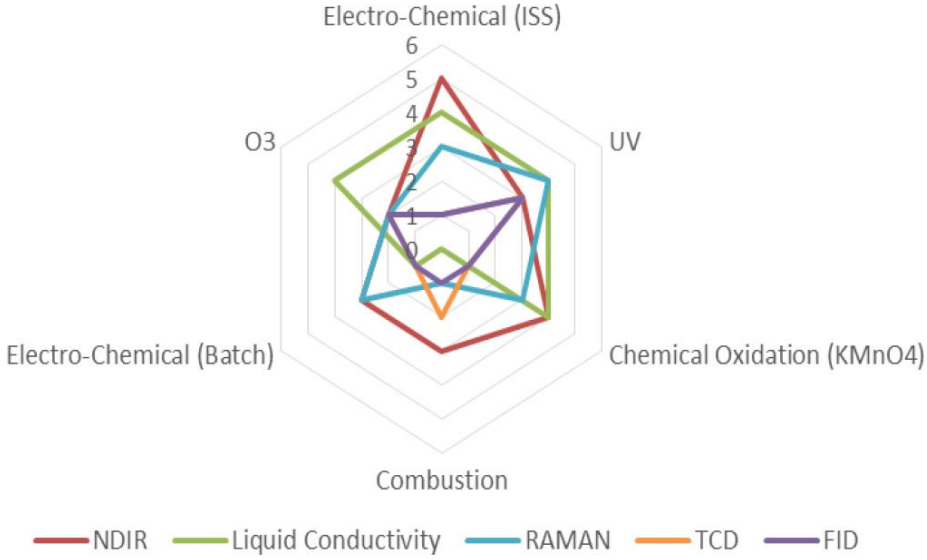

Fig. 9: Trade study and corresponding outcomes, comparing oxidation and detection technologies vs. technology readiness (TRL is represented as the concentric integers) [36]

D. Microbial Monitoring

ISS microbial monitoring technology is culture-based and will not be able to provide adequate information to assess crew health and ECLSS performance during long-duration missions beyond low-Earth orbit. Accordingly, LSS is investing in technologies to take advantage of recent developments in molecular-based identification methods that can be practically applied to identify and characterize microorganisms during spaceflight.

This year, LSS has focused on the RAZOR® system from BioFire Defense (Salt Lake City, Utah). Flown to ISS in 2017, RAZOR is a polymerase chain reaction microbial detector [37]. Efforts in this area have included optimization of DNA primer assays for several microbial species of interest, such as *Aeromonas hydrophila, Staphylococcus aureus, Salmonella entericasertyphimurium* and *Stachybotrys chartarum* to be used with RAZOR on-board ISS. The LSS team has also begun to validate procedures for food and surface sampling, intended to be conducted aboard ISS, with a goal of introducing samples directly into the RAZOR system. Finally, work is on-going to correlate the results of RAZOR experiments with the current crew health microbial limit, which is based on heterotrophic plate counts. As LSS works to develop the next generation of microbial sampling and enumeration technologies, the associated operational limits must be updated.

These tasks are expected to both advance the potential practical application of the RAZOR and to provide lessons learned for all molecular-based monitoring devices. Ultimately, LSS's goal is to compare quantitative polymerase chain reaction techniques and sequencing techniques with current identification methodologies to better understand the sensitivities of the technologies, the need for specific targets, the impact of microbial viability on the information provided, and the circumstances that may interfere with microbial identification

VI. Conclusion

As humans seek to venture beyond LEO, the criticality of having a reliable life support system increases. The LSS project under NASA's AES Programs is actively working on addressing community identified ECLSS capability gaps in preparation for long-duration exploration. Starting with ISS systems as a point of departure, where applicable, the project is evolving the SOA and developing new systems to be smaller, lighter and more reliable and to close the water and air loops and to reduce the consumable mass needed to survive far from Earth. As part of this effort, a series of LSS technology demonstrations on the ISS are planned between now and ISS end of life. These demos are summarized in Fig. 10.

	FY17	FY18	FY19	FY20	FY21	FY22	Flight Demo Goal
Spacecraft Atmosphere Monitor (S.A.M.)			▲				Continuous measurement of major constituents, on-demand measurement of
Brine Processor Assembly (BPA)			▲				One year demonstration of >40% water recovery from urine brine.
Aerosol Sampler Stage I Re-Flight		▲					Obtain quantitative data on airborne particles in multiple ISS locations.
Aerosol Sampler Stage II				▲			Real time monitoring of aerosol particulates.
CO_2 Reduction						▲	>75% reduction of CO2 demonstrating the plasma pyrolysis and hydrogen separation

Fig. 10 LSS Planned Flight Demonstrations with Launch Dates shown as triangles

Acknowledgments

The authors would like to thank the entire AES LSS team for their technical competence and hard work, especially our task leads: MSFC/Jay Perry, Greg Schunk, Layne Carter, James Knox, Tim Giesy, Zach Greenwood, JSC/Imelda Stambaugh, Michael Callahan, Craig Broerman, Jeffrey Sweterlitch, JPL/Murray Darrach and GRC/Juan Agui and Marit Meyer.

References

[1] NASA, "Space Station 2024 Extension Expands Economic and Research Horizons," 27 January 2014. [Online]. Available: https://www.nasa.gov/mission_pages/station/research/news/2024extension/. [Accessed 23 July 2018].

[2] NASA, "Deep Space Gateway to Open Opportunities for Distant Destinations," 6 August 2017. [Online]. Available: https://www.nasa.gov/feature/deep-space-gateway-to-open-opportunities-for-distant-destinations. [Accessed 23 July 2018].

[3] M. Sargusingh, M. S. Anderson, J. L. Broyan, A. V. Macatangay, J. L. Perry, W. F. Schneider, R. L. Gatens and N. Toomarian, "NASA Environmental Control and Life Support Technology Development and Maturation for Exploration: 2017 to 2018 Overview," in *48th International Conference on Environmental Systems*, Alburquerque, 2018.

[4] J. Law, M. V. Baalen, M. Foy, S. S. Mason, C. Mendez, M. L. Wear, V. E. Meyers and D. Alexander, "Relationship Between Carbon Dioxide Levels and Reported Headaches on the International Space Station," *Journal of Occupational and Environmental Medicine*, vol. 56, no. 5, pp. 477-483, 2014.

[5] R. Verduzco, *Chemical Characterization and Modelling of Liquid Chemisorbent for a direct Contact CO2 Removal Technology Engineering Memo - Tasks A.1, A.2, B.1, B.2,*, Chemical and Biomolecular Engineering Department, Rice University, 2017.

[6] D. K. Breaux, P. Friedel, K. C. Hwang, G. Probert, J. M. Ruder and L. Sawamura, "Evaluation of a Liquid Amine System for Spacecraft Carbon Dioxide Control," NASA Ames Research Center, 1974.

[7] K. J. Viestenz, R. M. Jenson, M. M. Weislogel and M. J. Sargusingh, "Capillary Structures for Exploration Life Support Payload Experiment," in *48th International Conference on Environmental Systems*, Albuquerque, 2018.

[8] T. Rogers, M. J. Swickrath, R. Verduzco, S. Sharma and J. Graf, "Feasibility Assessment of Liquid Amine Carbon Dioxide Removal System for Microgravity and Terrestrial Applications," in *48th International Conference on Environmental Systems*, Albuquerque, 2018.

[9] J. C. Knox, "Development of Carbon Dioxide Removal Systems for NASA's Deep Space Human Exploration Missions 2017-2018," in *48th International Conference on Environmental Systems*, Albuquerque, 2018.

[10] Z. W. Greenwood, M. B. Abney, B. R. Brown, E. T. Fox and C. and Stanley, "State of NASA Oxygen Recovery".

[11] R. R. Wheeler, J. T. Holtsnider, S. R. Wambolt, M. B. Abney and Z. W. Greenwood, "Plasma Pyrolysis Assembly (PPA) Zero-g Flight Experiment Development," in *48th International Conference on Environmental Systems*, Albuquerque, 2018.

[12] W. F. Schneider and S. A. Shull, "NASA Advanced Explorations Systems: 2017 Advancements in Life Support Systems," in *2017 AIAA Space and Astronautics Forum and Exposition*, Orlando, 2017.

[13] O. Monje, M. J. Kayatin and J. L. Perry, "Characterization of sorbents for controlling ammonia in spacecraft cabin air," in *48th International Conference on Environmental Systems*, Albuquerque, 2018.

[14] O. Monje and J. M. Surma, "Polanyi Evaluation of Adsorptive Capacities of Commercial Activated Carbons," in *47th International Conference on Environmental Systems*, Charleston, 2017.

[15] M. Kayatin and J. Perry, "Evaluatino of a Candidate Trace Contaminant Control Subsystem Architecture: the High Velocity, Low Aspect Ratio Adsorption Process," in *47th International Conference on Environmental Systems*, Charleston, 2017.

[16] S. A. Vilekar, K. Hawley, C. Junaedi, B. Crowder, J. Prada, R. Mastanduno, J. L. Perry and M. J. Kayatin, "Energy Efficient Microlith®-based Catalytic Reactor and Recuperator for Air Quality Control Applications," in *47th International Conference on Environmental Systems*, Charleston, 2017.

[17] J. H. Agui and J. L. Perry, "Life Support Filtration System Trade Study for Deep Space Missions," in *47th International Conference on Environmental Systems*, Charleston, 2017.

[18] J. H. Agui, R. D. Green and R. Vijayakumar, "Development of a Multi-Stage Filter System for Cabin Ventilation Systems on the ISS and Future Deep Space Missions," in *48th International Conference on Environmental Systems*, Albuquerque, 2018.

[19] L. Carter, J. Williamson, C. A. Brown, J. Bazley, D. Gazda, R. Schaezler and F. Thomas, "Status of ISS Water Management and Recovery," in *48th International Conference on Environmental Systems*, Albuquerque, 2018.

[20] M. R. Callahan, N. M. Adam, M. S. Roberts, J. L. Garland, J. C. Sager and K. D. PIckering, "Assessment of Silver Based Disinfection Technology for CEV and Future US Spacecraft," in *37th International Conference on Environmental Systems*, Chicago, 2007.

[21] S. M. Smith, S. R. Zwart, K. A. McMonigal and C. L. Huntoon, "Thyroid Status of Space Shuttle Crewmembers: Effects of Iodine Removal," *Aviation, Space, and Environmental Medicine*, vol. 82, no. 1, pp. 49-51, 2011.

[22] W. Li, L. M. Calle, A. J. Hanford, I. Stambaugh and M. R. Callahan, "Investigation of Silver Biocide as a Disinfection Technology for Spacecraft - An Early Literature Review," in *48th International Conference on Environmental Systems*, Albuquerque, 2018.

[23] L. Kelsey, P. Pasadilla, T. MacCallum and J. Fisher, "Development of Ionomer-membrane Water Processor (IWP) technology for water recovery from urine," in *44th International Conference on Environmental Systems*, Tucson, 2014.

[24] L. K. Kelsey, P. Pasadilla and T. Cognata, "Closing the Water Loop for Exploration: 2018 Status of the Brine Processor Assembly," in *48th International Conference on Environmental Systems*, Albuquerque, 2018.

[25] L. K. Kelsey, P. Pasadilla, J. Brockbank, B. Locke, J. Lopez, T. Cognata, T. Orlando, N. Hahn, C. Meyer and S. A. Shull, "Closing the Water Loop for Exploration: Status of the Brine Processor Assembly," in *47th International Conference on Environmental Systems*, Charleston, 2017.

[26] R. Sevanthi, D. Christenson, A. Morse, W. A. Jackson, C. Meyer and L. Vega, "Impact of Waste Stream Composition and Loading Regime on the Performance of a New Flight Compatible Membrane-Aerated Biological Reactor," in *46th International Conference on Environmental Systems*, Vienna, 2016.

[27] M. Salehi, R. Sevanthi, D. Duncon, W. A. Jackson, A. Morse and M. Callahan, "A Two-Stage Biological Reactor for Treatment of Space Based Waste Waters," in *48th International Conference on Environmental Systems*, Albuquerque, 2018.

[28] R. Sevanthi, M. J. W. A. Salehi, A. Morse and M. Callahan, "Long Term Biological Treatment of Space Habitation Waste Waters in a One Stage MABR: Comparison of Operation for N and C Oxidation With and Without Simultaneous Denitrification," in *48th International Conference on Environmental Systems*, Albuquerque, 2018.

[29] B. D. Gardner, P. M. Erwin, T. Cougar and B. Ulrich, "International Space Station Major Constituent Analyzer On-orbit Performance," in *47th International Conference on Environmental Systems*, Charleston, 2017.

[30] W. T. Wallace, T. F. Limero, L. J. Loh, P. D. Mudgett and D. B. Gazda, "Monitoring of the Atmosphere on the International Space Station with the Air Quality Monitor," in *47th International Conference on Environmental Systems*, Charleston, 2017.

[31] S. M. Madzunkov, S. Schowalter, D. Nikolić, J. Simcic, E. Diaz, R. D. Kidd, V. White, B. Bae, J. Gill, I. Cisneros, R. Schaefer, V. Hristov, M. L. Homer and M. Darrach, "Progress Report on the Spacecraft Atmosphere Monitor's Development Model," in *48th International Conference on Environmental Systems*, Albuquerque, 2018.

[32] M. E. Meyer, "Aerosol Sampling Experiment on the International Space Station," in *47th International Conference on Environmental Systems*, Charleston, 2017.

[33] M. E. Meyer, "Results of the Aerosol Sampling Experiment on the International Space Station," in *48th International Conference on Environmental Systems*, Albuquerque, 2018.

[34] J. A. Rutz, J. A. Schultz, C. M. Kuo, H. E. Cole, S. Manuel, M. Curtis, P. R. Jones, O. D. Sparkman and J. T. McCoy, "Discovery and Identification of Dimethylsilanol as a Contaminant in ISS Potable Water," in *41st International Conference on Environmental Systems*, Portland, 2011.

[35] T. Rector, C. Metselaar, B. Peyton, J. Steele, W. Michalek, E. Bowman, M. Wilson, D. Gazda and L. Carter, "An Evaluation of Technology to Remove Problematic Organic Compounds from the International Space Station Potable Water," in *44th International Conference on Environmental Systems*, Tucson, 2014.

[36] C. Morrison, C. McPhail, S. Schumacher, M. Callahan and S. Pensinger, "Considerations for Development of a Total Organic Carbon Analyzer for Exploration Missions," in *48th International Conference on Environmental Systems*, Albuquerque, 2018.

[37] C. Khodadad and J. MacAskill, "International Space Station Research & Technology: Water Monitoring Suite," 1 August 2018. [Online]. Available: https://www.nasa.gov/mission_pages/station/research/experiments/2109.html. [Accessed 3 August 2018].