https://ntrs.nasa.gov/search.jsp?R=20180007748 2020-03-07T04:18:37+00:00Z

# Kilopower Reactor Using Stirling Technology (KRUSTY) Nuclear Ground Test Results and Lessons Learned

Marc Gibson[1], David Poston[2], Patrick McClure[2], Tom Godfroy[3], Max Briggs[1], Jim Sanzi[3]

[1]NASA Glenn Research Center
[2]Los Alamos National Laboratory
[3]Vantage Partners, LLC

# KRUSTY Test Objectives

- **<u>Objective 1</u>: Operate the reactor at steady state with a thermal power output of 4 $kW_t$ at a temperature of 800° C**

- **<u>Objective 2</u>: Verify the stability and load following characteristics of the reactor during nominal and off-nominal conditions**

- **<u>Objective 3</u>: Benchmark the nuclear codes and material cross sections using the test data**

# Kilopower Development and the KRUSTY Experiment

Flight Concept

KRUSTY Design

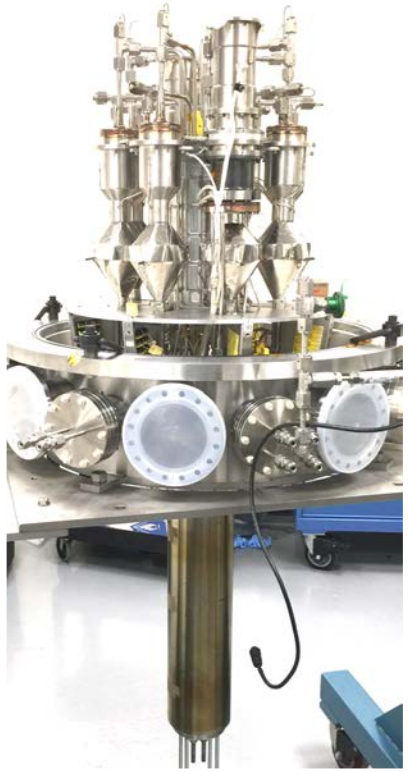

KRUSTY
Hardware

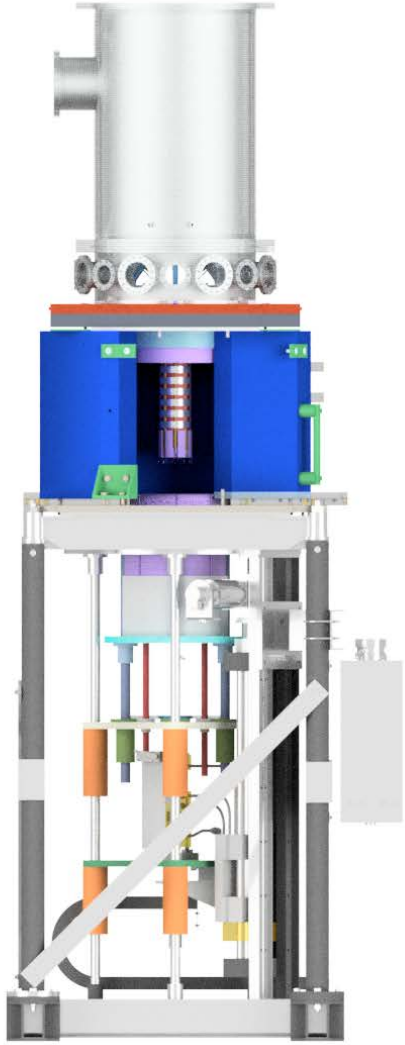

KRUSTY
Experimental Design

KRUSTY
Experimental
Hardware

Multi-mission Design

# Kilopower 1-3 kWe Multi-Mission vs. KRUSTY Hardware

Multi-mission Design

KRUSTY Design

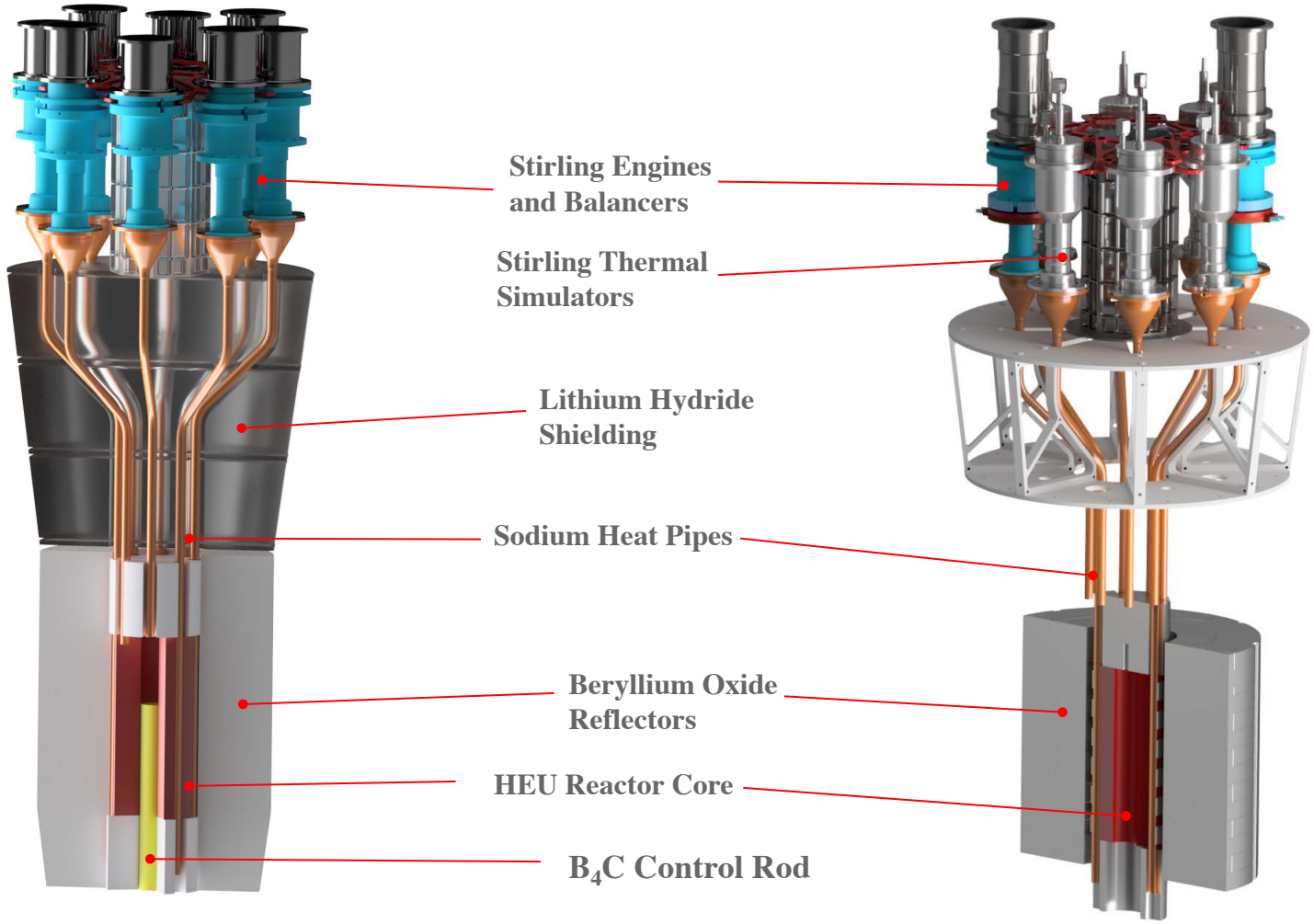

# Reactor Assembly

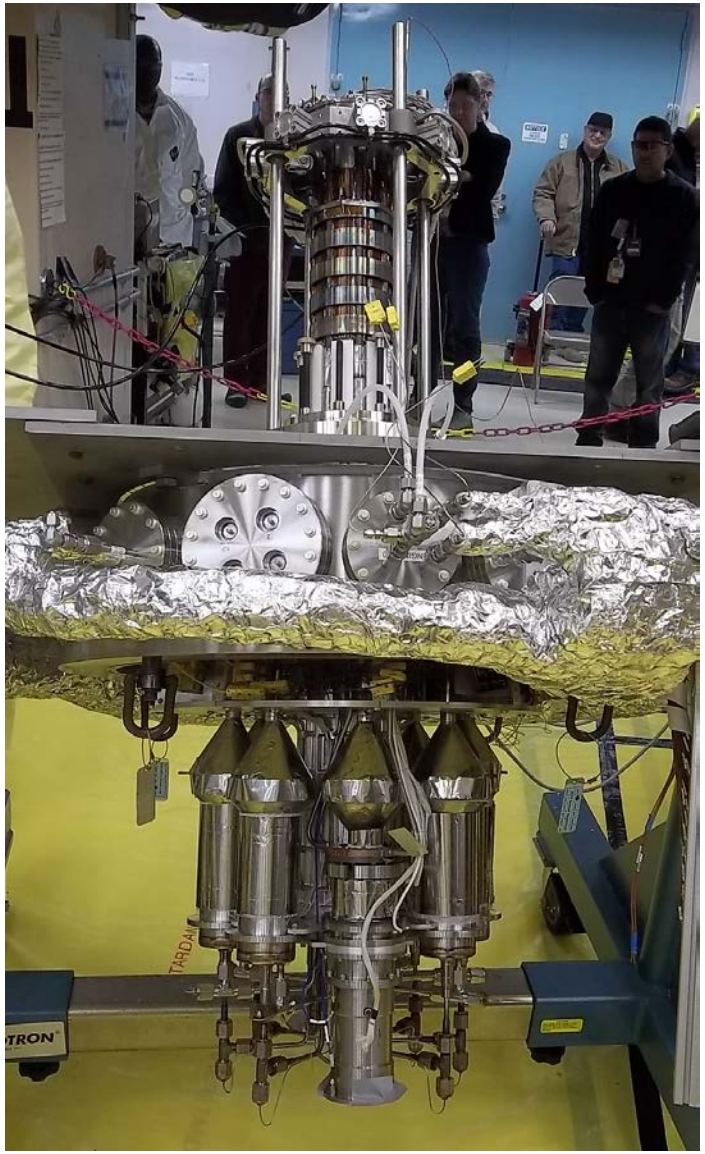

# Experiment Assembly

# Flight vs. KRUSTY

Flight Unit

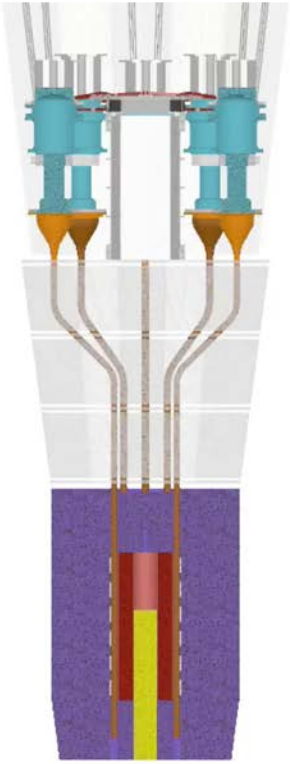

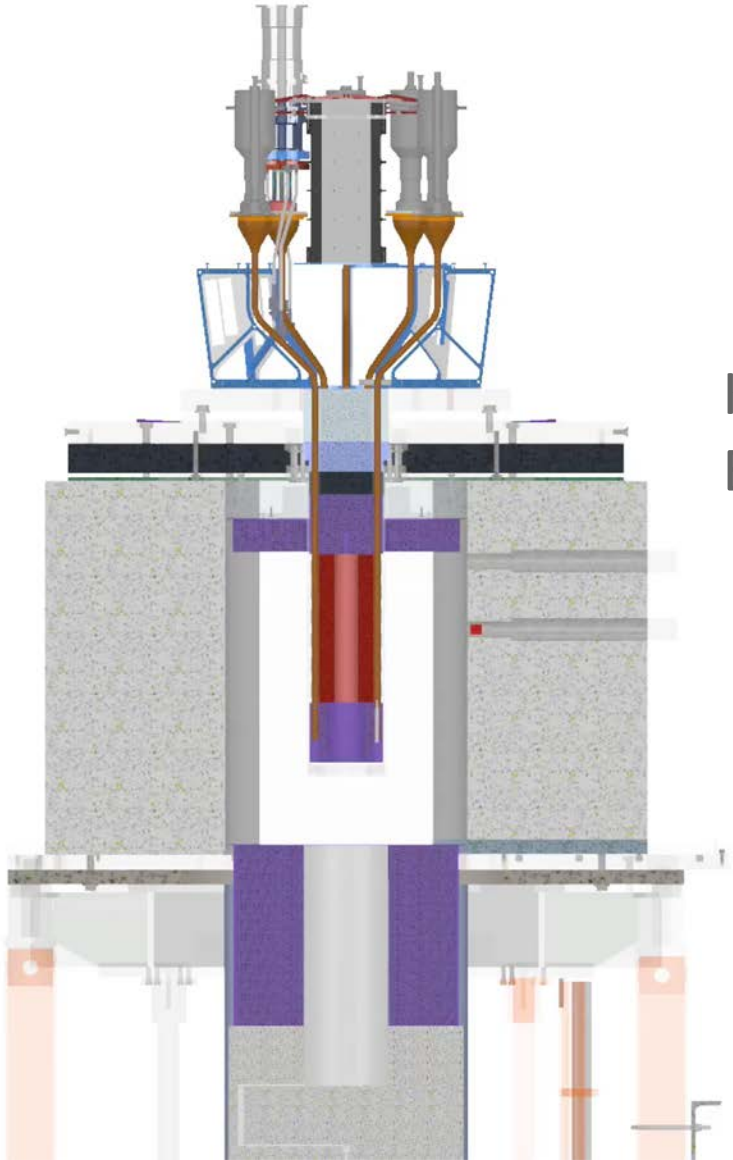

KRUSTY Experiment

# Reactor Startup

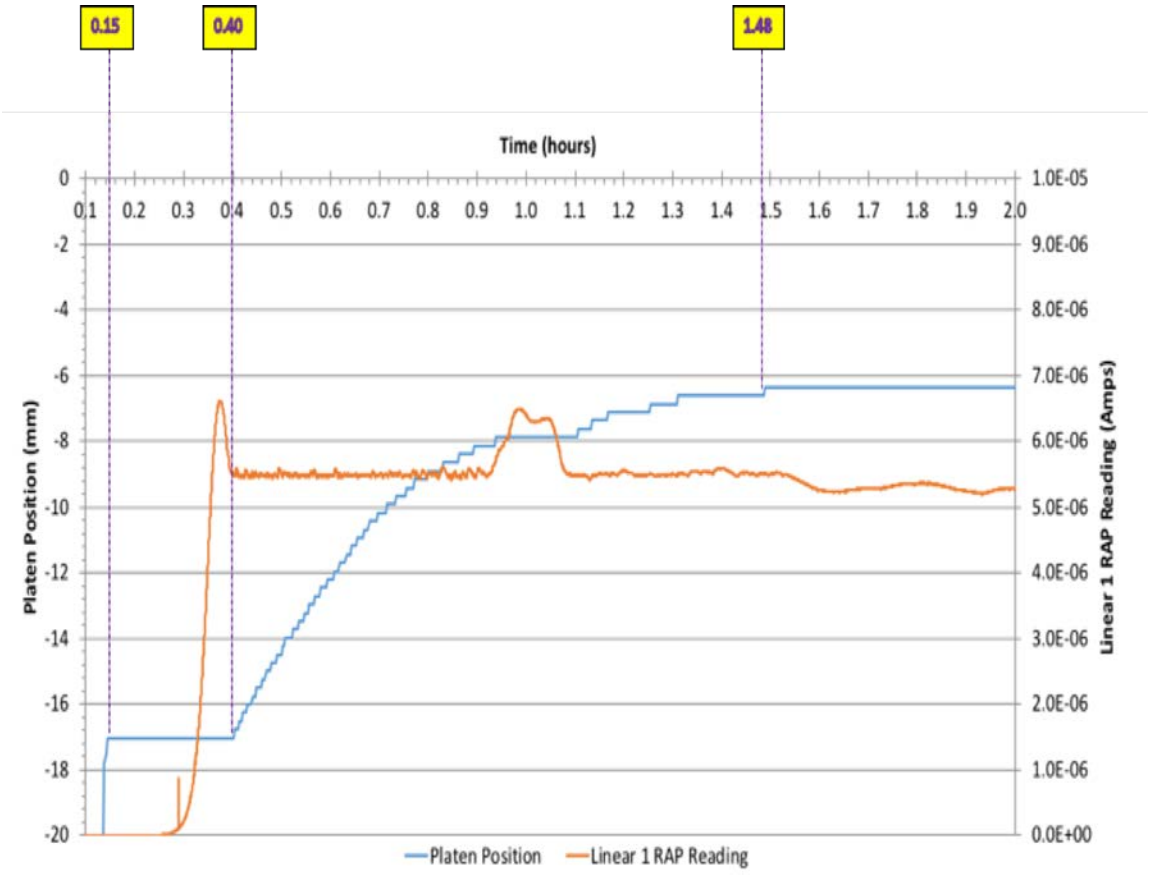


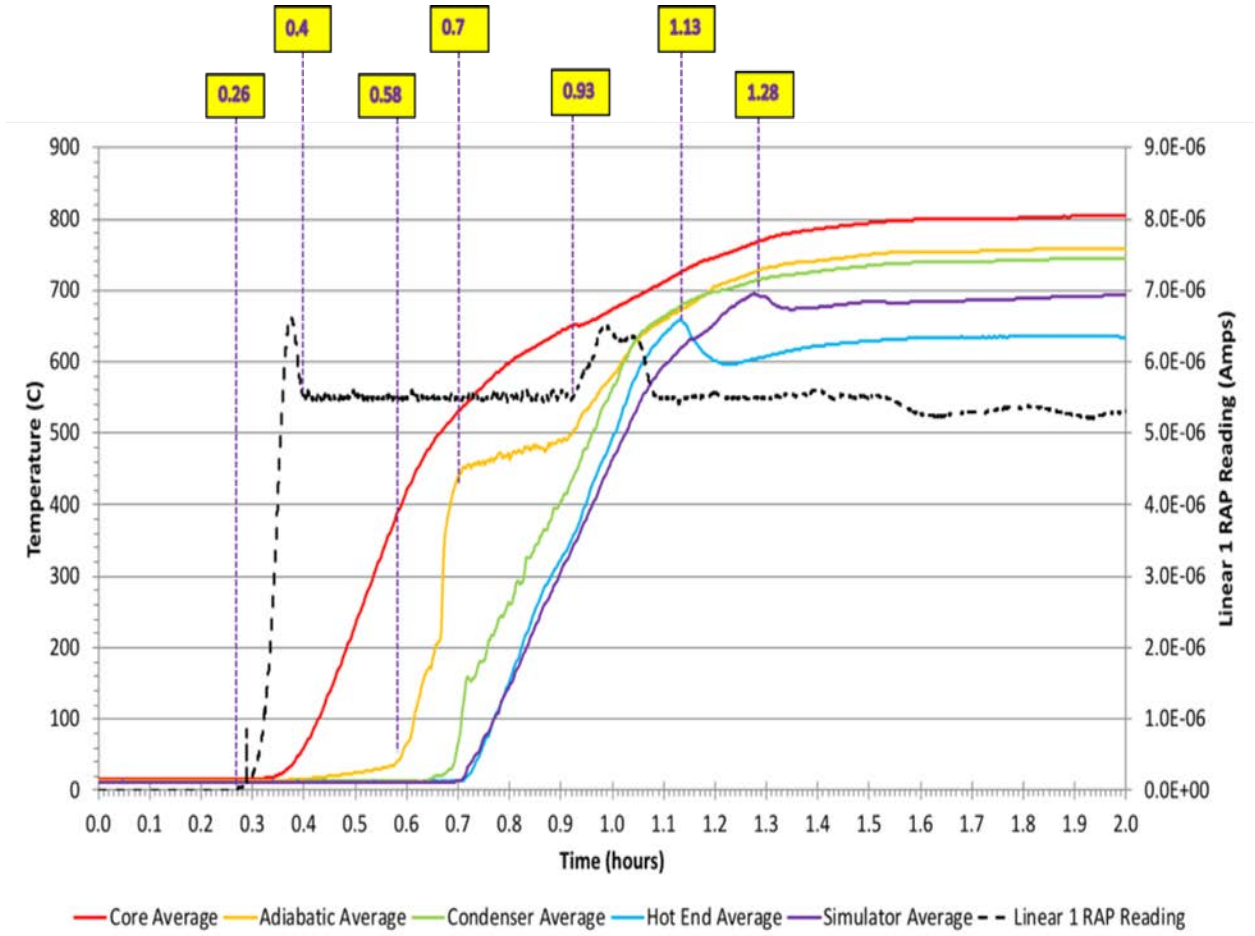

# Maximum Thermal Draw

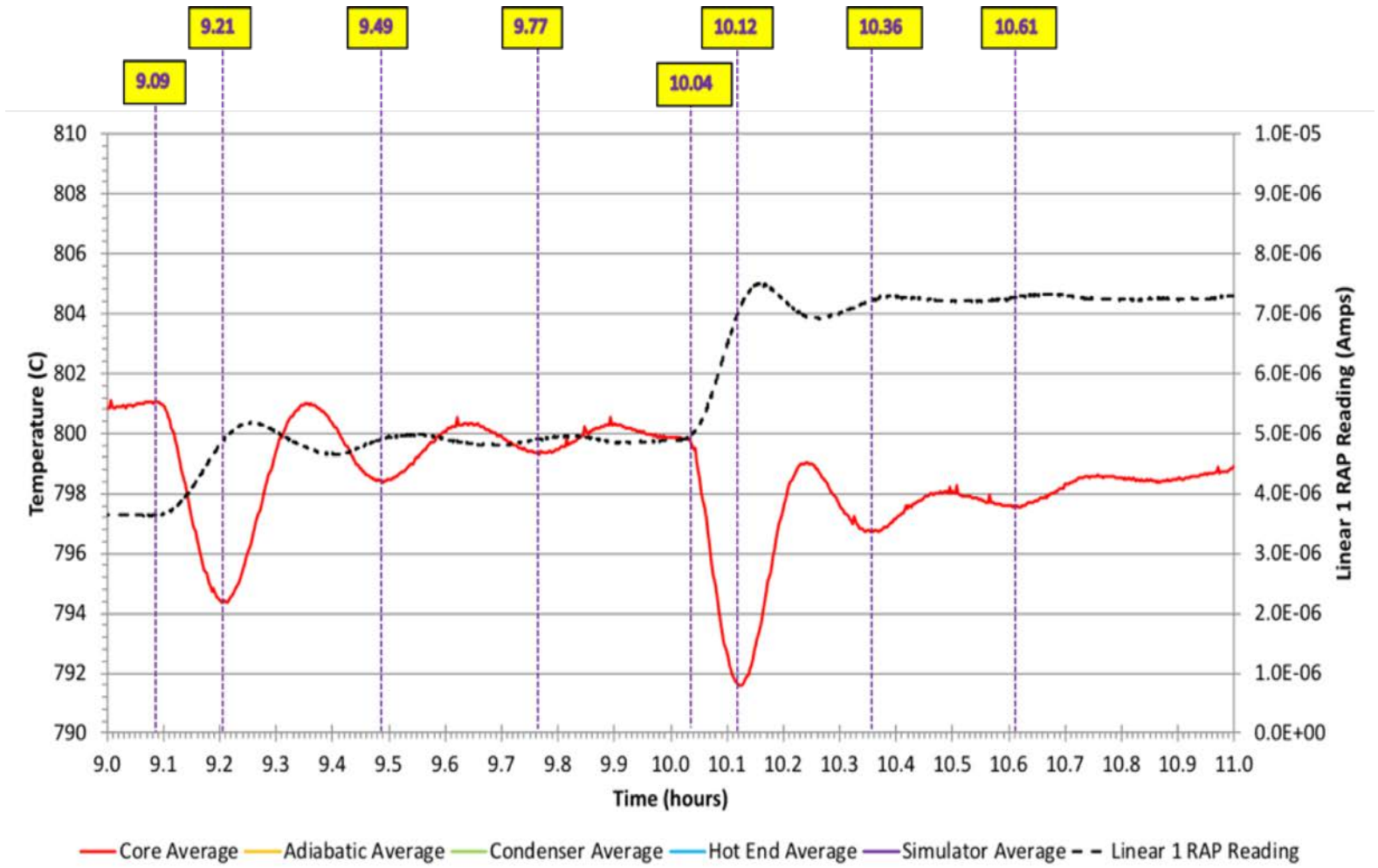


- 10.04 hours: Stirling engines and simulators turned up to maximum thermal draw
- 10.12: core thermal power increases enough to reverse core temperature
- 10.36: First period of oscillation shows controlled dampened response

# Total Coolant Loss Scenario

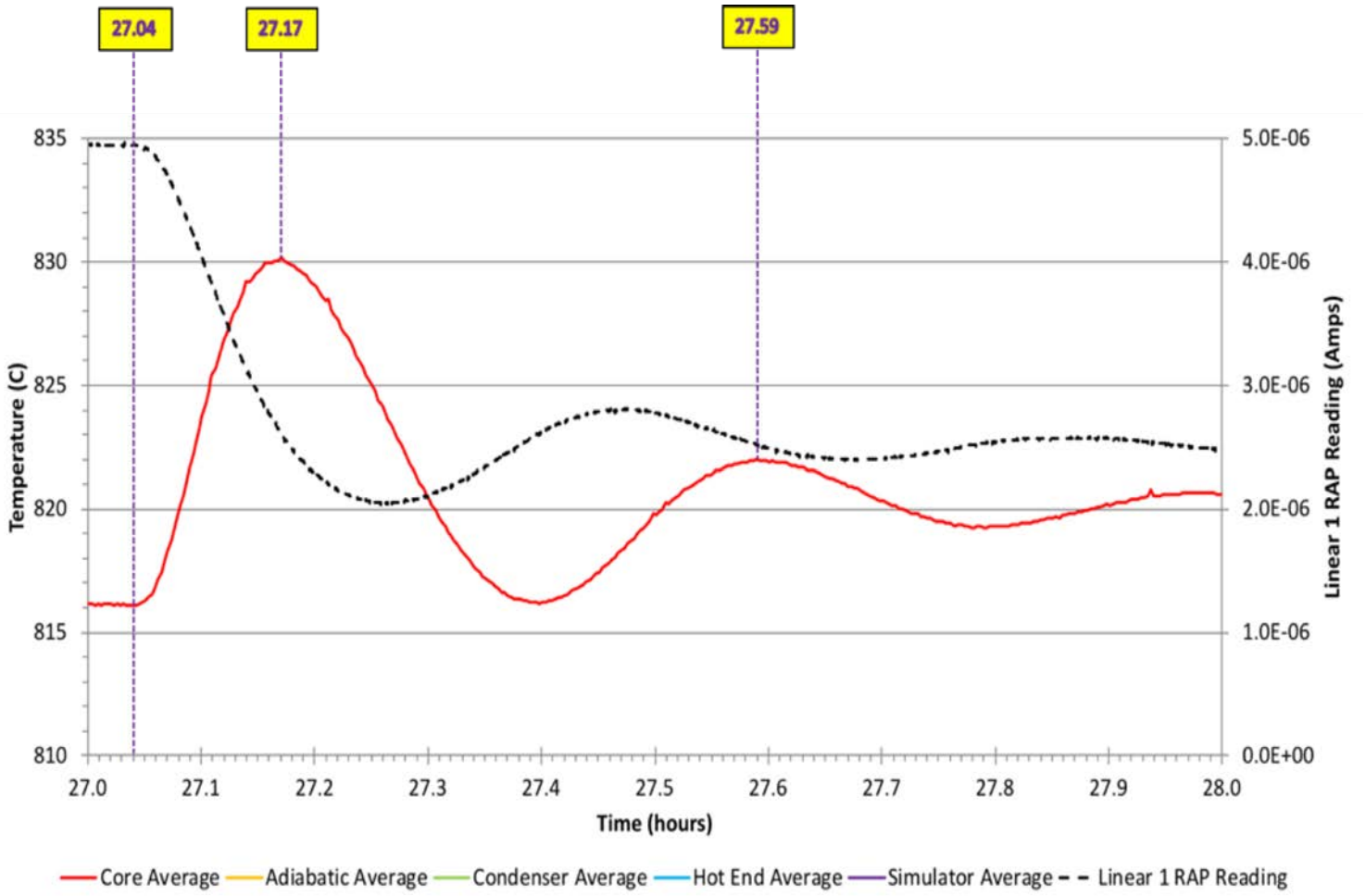


- 27.04 hours: Stirling engines and thermal simulators are shut off to simulate worst case reactor coolant loss condition
- 27.17: Local maximum is reached when reactor thermal power decreases to the point where core temperature reverses
- 27.59: First period of oscillation showing damped response converging to steady state

# Setting the Reactor Temperature

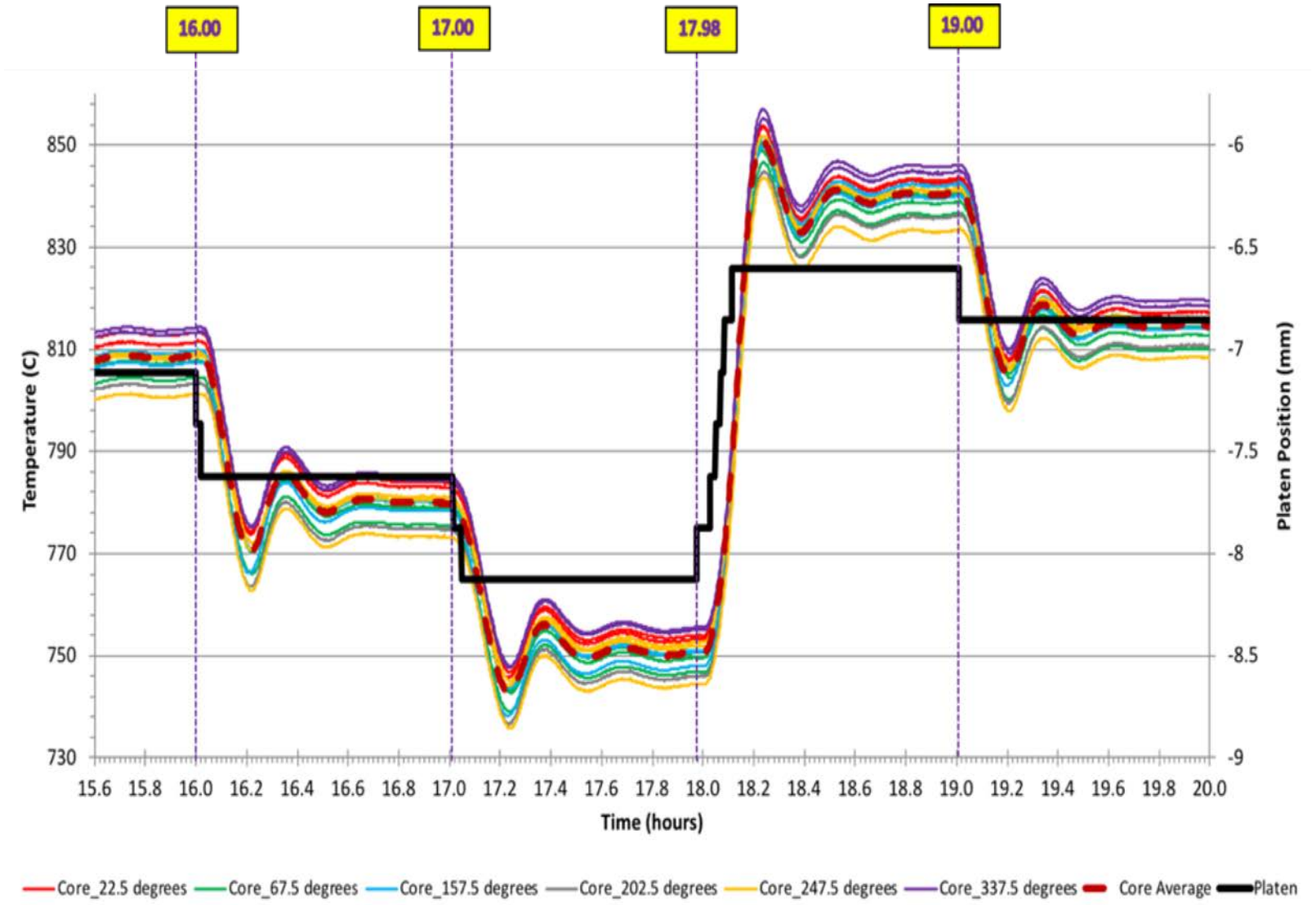

# Overall Performance

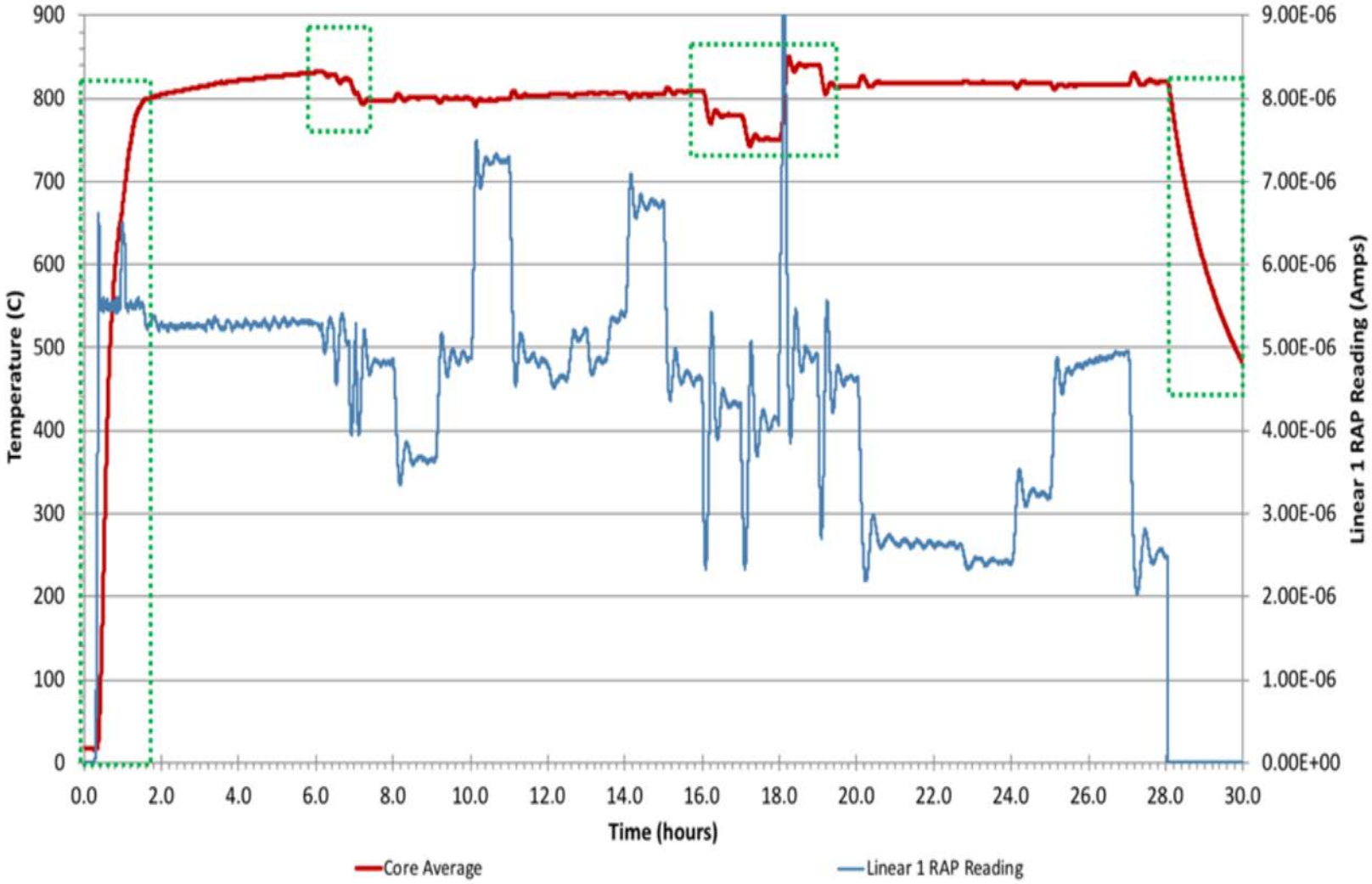

# KRUSTY Performance Metrics

| Event Scenario | Performance Metric | KRUSTY Experiment | Performance Status |
|---|---|---|---|
| Reactor Startup | < 3 hours to 800 deg. C | 1.5 hours to 800 deg. C | Exceeds |
| Steady State Performance | 4 kWt at 800 deg. C | > 4 kWt at 800 deg. C | Exceeds |
| Total Loss of Coolant | < 50 deg. C transient | < 15 deg. C transient | Exceeds |
| Maximum Coolant | < 50 deg. C transient | < 10 deg. C transient | Exceeds |
| Convertor Efficiency | > 25 % | > 30 % | Exceeds |
| Convertor Operation | Start, Stop, Hold, Restart | Start, Stop, Hold, Restart | Meets |
| System Electric Power Turn Down Ratio | > 2:1 (half power) | > 16:1 | Exceeds |

# Conclusions

- **KRUSTY test complete!!**
  - First real space reactor test in over 50 years
  - Less than 20 million dollars invested
  - Completed in just over 3 years
  - All objectives were met or exceeded
- **What does this mean for NASA?**
  - The ability to move forward towards a flight mission
  - A proven design capable of providing multiple kilowatts of electrical power for several years or decades