https://ntrs.nasa.gov/search.jsp?R=20190027038 2020-03-10T01:19:05+00:00Z

Control Technology Needs for Electrified Aircraft Propulsion Systems

Paper GT2019-91413

Donald L. Simon
NASA Glenn Research Center
21000 Brookpark Road
Cleveland, OH, 44135

Joseph W. Connolly
NASA Glenn Research Center
21000 Brookpark Road
Cleveland, OH, 44135

Dennis E. Culley
NASA Glenn Research Center
21000 Brookpark Road
Cleveland, OH, 44135

ASME Turbo Expo 2019
June 17-21, 2019
Phoenix, AZ

Outline

- Electrified Aircraft Propulsion (EAP) Background
- Comparison of Conventional versus EAP Control Architectures
- EAP Control Technology Needs
  - Modeling Tools to Support Control Design
  - Control Strategies
  - Test Facilities
  - Certification Considerations
- Summary

Electrified Aircraft Propulsion (EAP) Background

- EAP relies on the generation, storage, and transmission of electrical power for aircraft propulsion
- Enables aircraft designs that apply advanced propulsion concepts such as distributed electric propulsion and boundary layer ingestion fans
- Benefits include a potential reduction in emissions, fuel burn, noise, and cost

NASA Aeronautics Strategic Implementation Plan

X-57 Maxwell
All Electric

N3-X
Distributed Turboelectric

STARC-ABL
Partial Turboelectric

Quadrotor
All Electric

Side-by-Side Helicopter
Hybrid Electric

Tiltwing
Turboelectric

Example NASA EAP Concept Vehicles

Electrified Aircraft Propulsion (EAP) Background

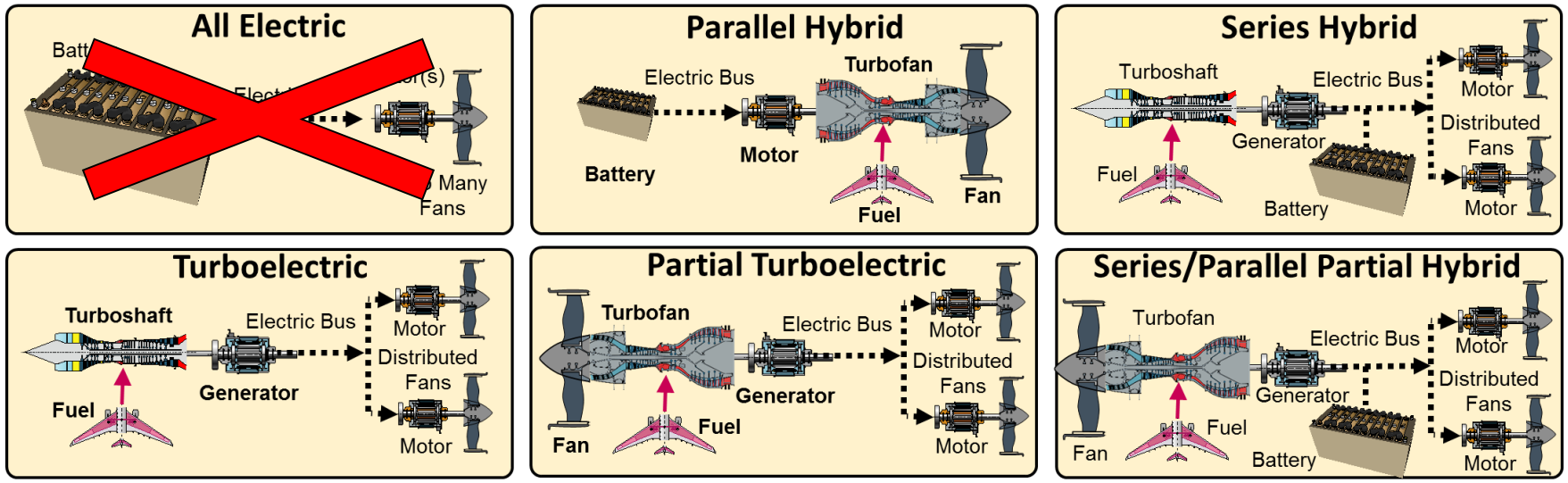

EAP Architecture Options

(the focus of this presentation is on architectures that contain gas turbine engine technology)

- EAP presents multiple technology challenges
  - Increased battery specific energy
  - Flight quality electric machines with high efficiency and specific power
  - Power electronics and power distribution technology to enable high voltage operation at altitude
  - Turbomachinery advances to enable high levels of power extraction

- The focus of this presentation is on <u>EAP controls technology challenges</u>

Comparison of Conventional and EAP Control Architectures

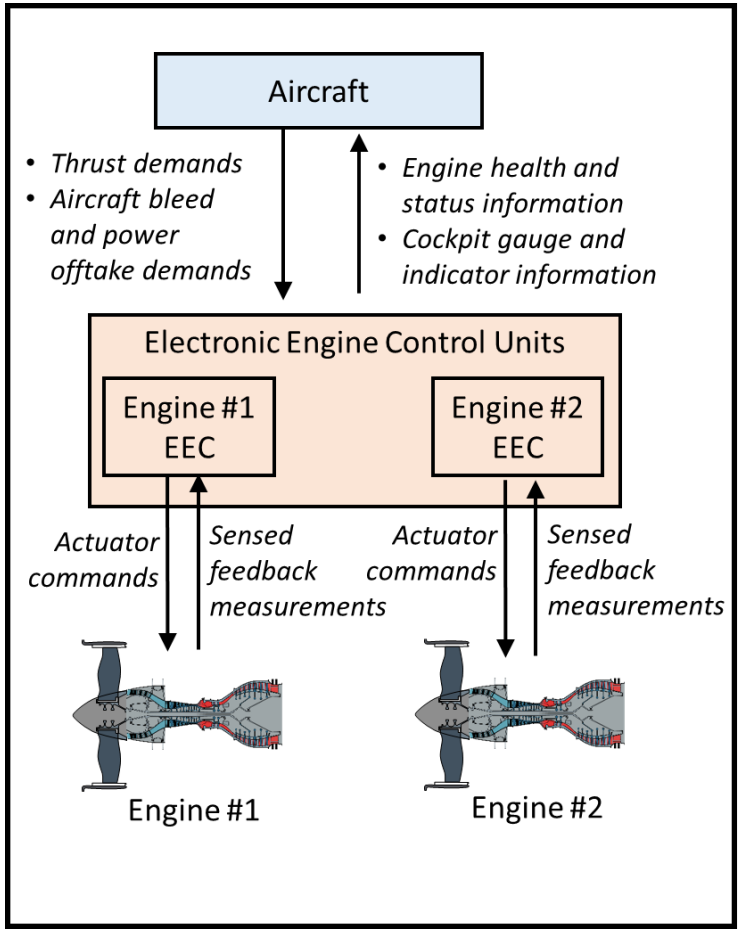

Conventional Aircraft Propulsion Control Architecture

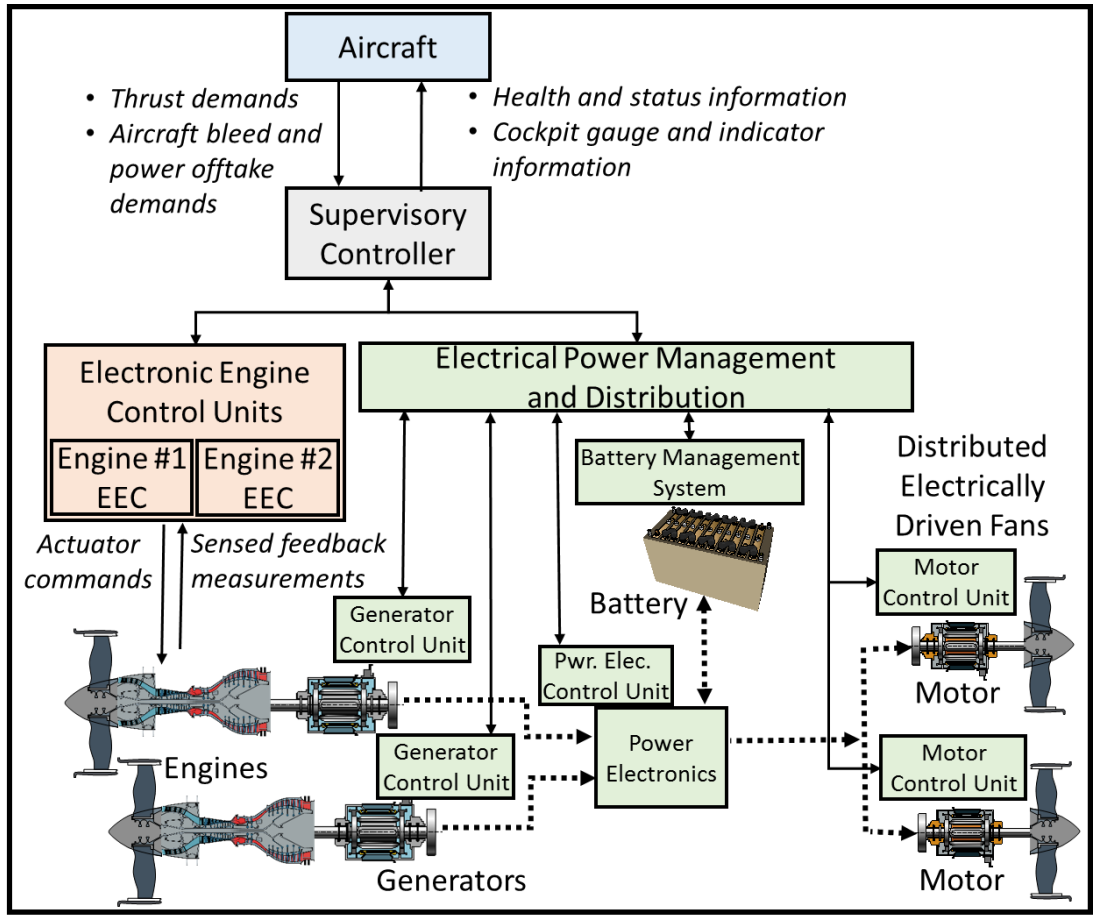

Electrified Aircraft Propulsion Control Architecture (notional)

- EAP control architectures are more distributed, more complex, and more coupled
- This presents both control design challenges and control design opportunities!

Modeling Tools to Support Electrified Aircraft Propulsion (EAP) Control Design

- Dynamic propulsion models used for control design must capture:
  - Relevant system dynamics
  - Performance/efficiency variations due to changes in operating point
  - Operational limits
  - System degradation and faults

- EAP control design will require integrated dynamic models consisting of turbomachinery, electrical components, and thermal management systems

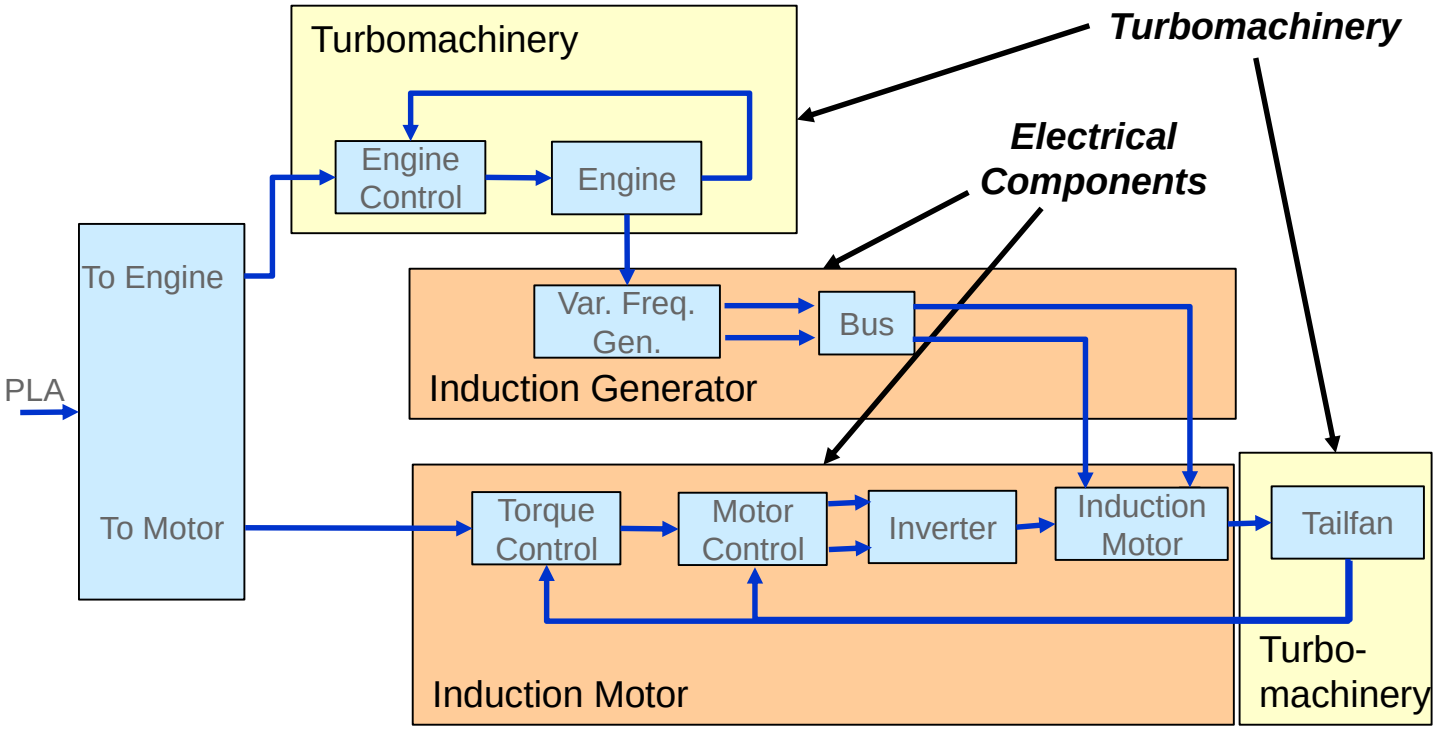

Example control architecture for a turboelectric propulsion system

EAP Optimal Energy Management

- Optimal energy management is relevant for hybrid designs that include energy storage devices
- Commonly applied in automotive industry for control of hybrid cars
- Allows engine to operate closer to its point of optimal efficiency over a greater portion of the flight
- Seeks to minimize fuel burn and emissions while adhering to operating constraints such as operability, structural, and thermal constraints

Hybrid EAP Power Schedule (Feasible Operating Modes):

Mode	Engine	Battery
①	Off	Discharging
②	On	Charging
③	On	Static
④	On	Discharging

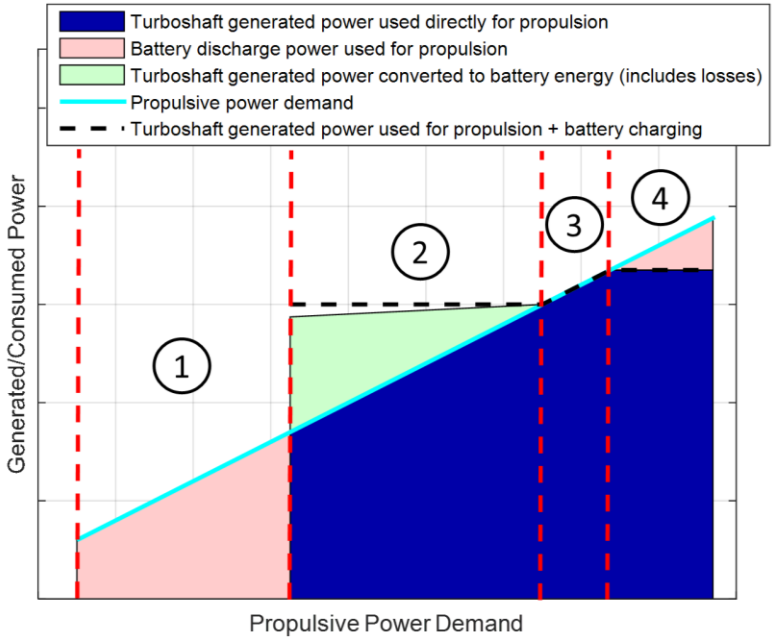

Hybrid EAP Power Schedule

EAP Transient Control Schedules and Limit Logic

- Transient control design accounts for approximately 75% of the control law design and development effort for conventional aircraft gas turbine engines
- EAP transient control design challenges:
  - Presents new design constraints and pinch points to coordinate transient response of integrated components
  - In addition to gas turbine control limits, additional limits are required on speed and torque levels of electric machines, battery charge/discharge rates, electric load rate of change, power levels, etc.
- EAP transient control design opportunities:
  - Hybrid designs with the capability to either extract or supply engine shaft power enables supplemental control of the engine in addition to fuel flow

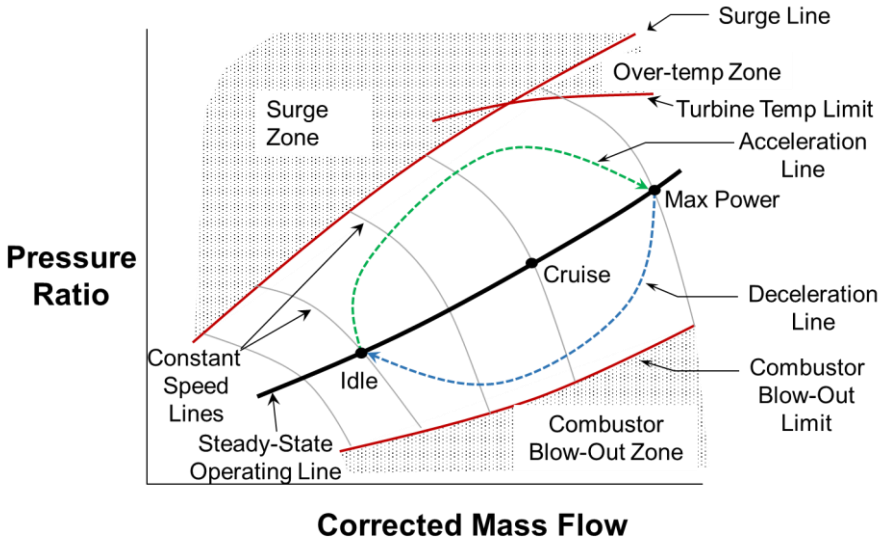

Compressor map indicating engine steady-state operation, transient operation, and operating limits

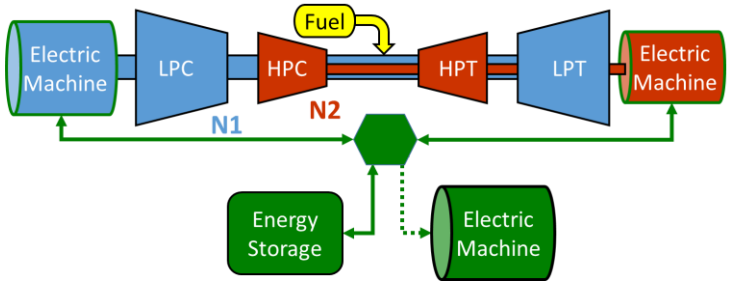

Turbine Electrified Energy Management (TEEM) technology applies electric machines to either supply or extract power to gas turbine engine shafts

Novel Cycle Engines and More Electric Engines

- Novel Cycle Engines:
  - High percentage of power extraction requires novel gas turbine engine cycle designs
  - This introduces the need for control strategies to schedule operation of the engine and its variable geometry in coordination with the power extraction demands placed on the engine

- More Electric Engine (MEE) Designs
  - MEE replaces conventional mechanical and pneumatic driven accessories with electrical-mechanical actuators.
  - Readily available source of electricity is expected to accelerate transition to More Electric Engine (MEE) controls and accessories

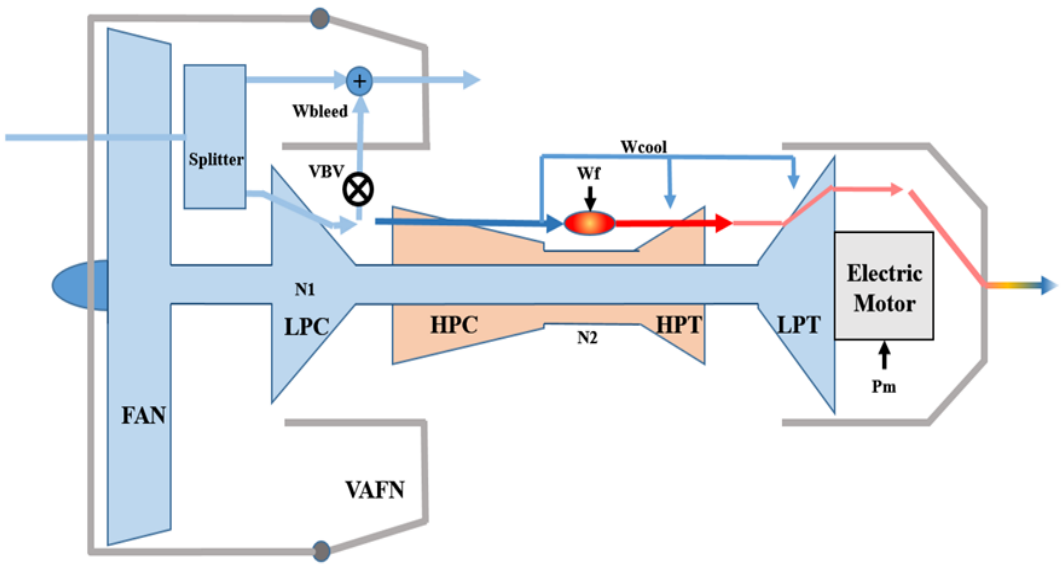

NASA hFan (Parallel Hybrid Electric Turbofan) with Variable Area Fan Nozzle (VAFN)

Facilities for Testing and Maturation of EAP Systems

- Test facilities are required to develop and mature a variety of EAP technologies, including controls
  - Facilities required for subsystem-level as well as system-level testing
  - Reconfigurable, with capability to test a variety of EAP design architectures and power levels
  - Altitude test capability to evaluate EAP control designs at representative operating conditions
  - Flight test vehicles to enable flight testing of EAP concepts, including controls

NASA Electric Aircraft Testbed (NEAT)

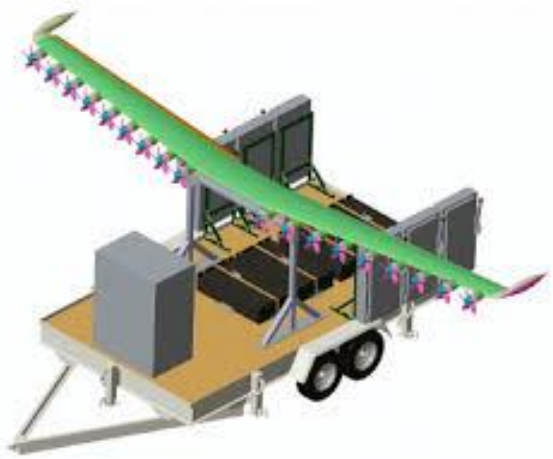

Hybrid-Electric Integrated Systems Testbed (HEIST)

EAP Control Design Considerations to Address Certification Requirements

- Established aerospace practices define guidelines for the development of civil aircraft and systems, and for conducting safety assessments on these systems
  - System development and safety assessment processes occur concurrently in an integrated/coordinated fashion
  - All functional failures/hazards must be identified and appropriately mitigated
- Control design will play a significant role in assuring that EAP systems comply with the airworthiness standards set forth by regulatory agencies. This includes:
  - Control fault detection and mitigation logic for compliance with development assurance level (DAL) allocations
  - Reversionary control modes and activation logic
  - Coordination of supervisory and subsystem level controllers in the presence of system faults
- The inherent coupling in EAP designs may necessitate certification of the EAP system as a whole

Aerospace Recommended Practices, Regulatory Agency Compliance Guidelines

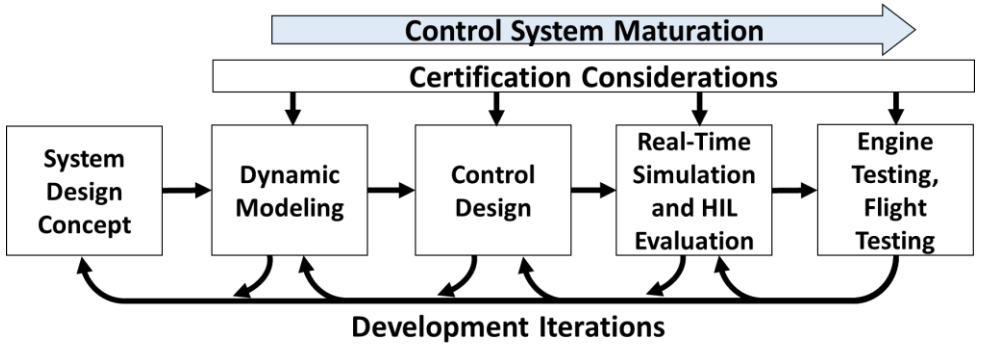

Aircraft Engine Controls Development Process

Summary

- Electrified Aircraft Propulsion offers a paradigm shift towards the design and control of aircraft propulsion systems
- EAP systems are expected to be more complex and require coordinated operation between turbomachinery and electrical components
- Dynamic coupling between EAP turbomachinery and electrical components offers several control design challenges and opportunities

Including control considerations early in the EAP design process can improve overall efficiency and performance!

Acknowledgments

- This work was conducted under the NASA Advanced Air Vehicles Program, Advanced Air Transport Technology Project
- The authors wish to thank members of the Commercial Aero-Propulsion Controls Working Group for their feedback on the EAP control needs captured in this document