https://ntrs.nasa.gov/search.jsp?R=20190032194 2020-03-10T01:18:42+00:00Z

Pixel Level Smoke Detection Model with Deep Neural Network

Muthukumaran Ramasubramanian[1], Aaron Kaulfus[1] , Manil Maskey[2], Rahul Ramachandran[2], Iksha Gurung[1] , Brian Freitag[1], Sundar Christopher[1]

1-University of Alabama in Huntsville
2-NASA/Marshall Space Flight Center

SPIE Remote Sensing 2019. September 9-12, 2019. Strasbourg, France

Introduction

- Biomass burning smoke has numerous detrimental environmental and ecological impacts
  - Respiratory and cardiovascular illnesses
  - Radiation budget
  - Nutrient availability
- Impacts realized both near source and potentially thousands of kilometers downwind depending on
  - Fire duration
  - Amount and type of biomass burned
  - Meteorological and fuel conditions
  - Vertical distribution in the atmosphere

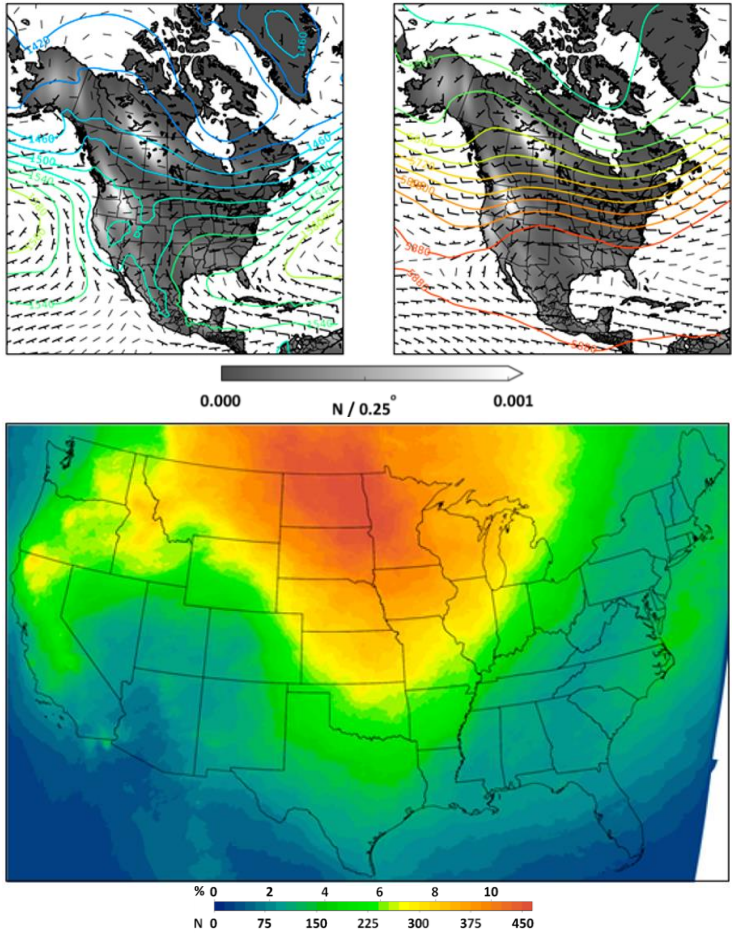

Spatial distribution of MODIS fire occurrence and NOAA HMS smoke for summer 2006-2015. From Kaulfus et al. 2017 Figure 2.

Introduction

- Current methods present challenges for continuous smoke detection and monitoring
  - In-situ monitoring
    - Temporal, spatial, and tracer limitations
  - Remote sensing
    - Polar orbiting, once-daily overpass
    - Manual or computational intensive multispectral analysis
    - Large data volumes
    - Multiple class multispectral classification

Objectives

- Deploy a smoke detection model using machine learning on satellite remote sensing observations
  - Leverage observations from the new generation of geostationary satellite
    - High spatial and temporal resolutions over large domains
  - Alternative to multispectral analysis
  - Eliminate time consuming, subjective manual analysis

Truth Dataset

- Geostationary Operational Environmental Satellite 16 shortwave reflectance data
  - Bands 1-6 (0.47, 0.64, 0.86, 1.37, 1.6 and 2.2 μm)
  - Access L1B radiance data from AWS
  - Convert to reflectance
  - Spatially resample to 1km
- National Oceanic and Atmospheric Administration (NOAA) Hazard Mapping System (HMS) smoke analysis
  - Satellite based operational daily analysis of smoke extent over the US and surrounding areas
  - Manual quality controlled by subject matter expert to correctly match smoke extent in GOES 16 image

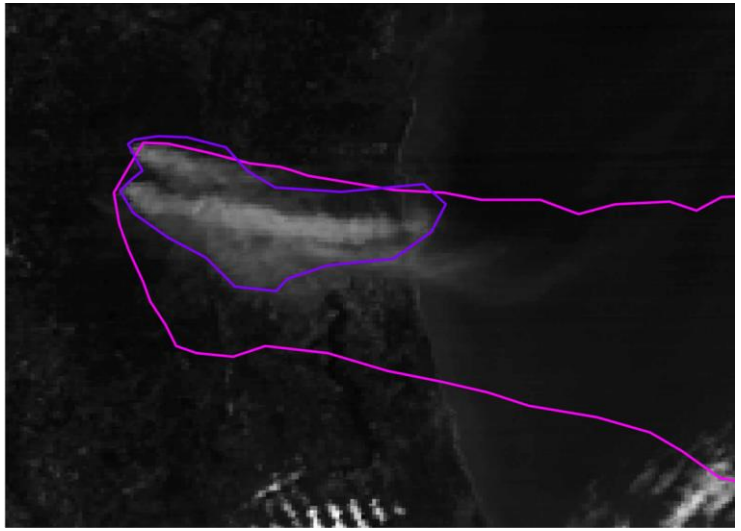

GOES 16 band 1 radiance with nearest in time HMS shapefiles (magenta and purple)

Truth Dataset

- Geostationary Operational Environmental Satellite 16 shortwave reflectance data
  - Bands 1-6 (0.47, 0.64, 0.86, 1.37, 1.6 and 2.2 μm)
  - Access L1B radiance data from AWS
  - Convert to reflectance
  - Spatially resample to 1km
- National Oceanic and Atmospheric Administration (NOAA) Hazard Mapping System (HMS) smoke analysis
  - Satellite based operational daily analysis of smoke extent over the US and surrounding areas
  - Manual quality controlled by subject matter expert to correctly match smoke extent in GOES 16 image

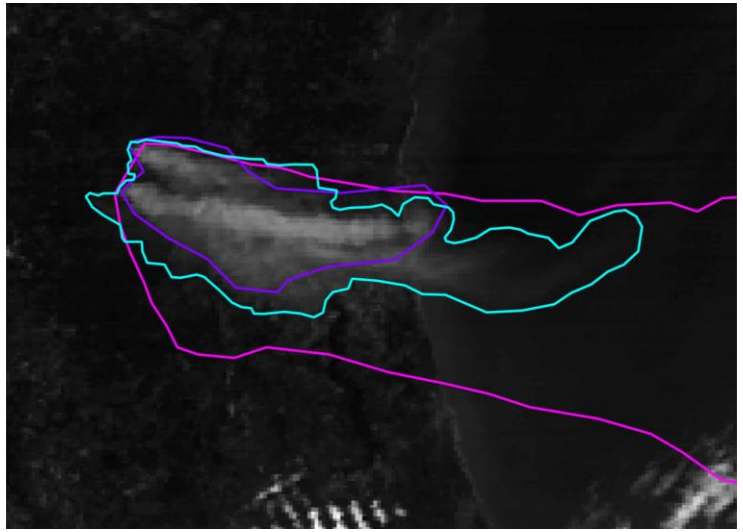

GOES 16 band 1 radiance with nearest in time HMS shapefiles (magenta and purple) with subject matter quality controlled shapefile (blue).

Truth Dataset

- Analyze 122 scenes containing smoke
  - 962,691 smoke pixels
    - Over low and high background reflectances (land and ocean)
    - Low and high optical thicknesses
    - Full range of sun angles
  - Contain relevant classes to discriminate smoke from including
    - Snow and ice
    - Clouds
    - Dust
  - 60% - 20% - 20% distribution of smoke pixels between training, validation and testing datasets

Model Architecture

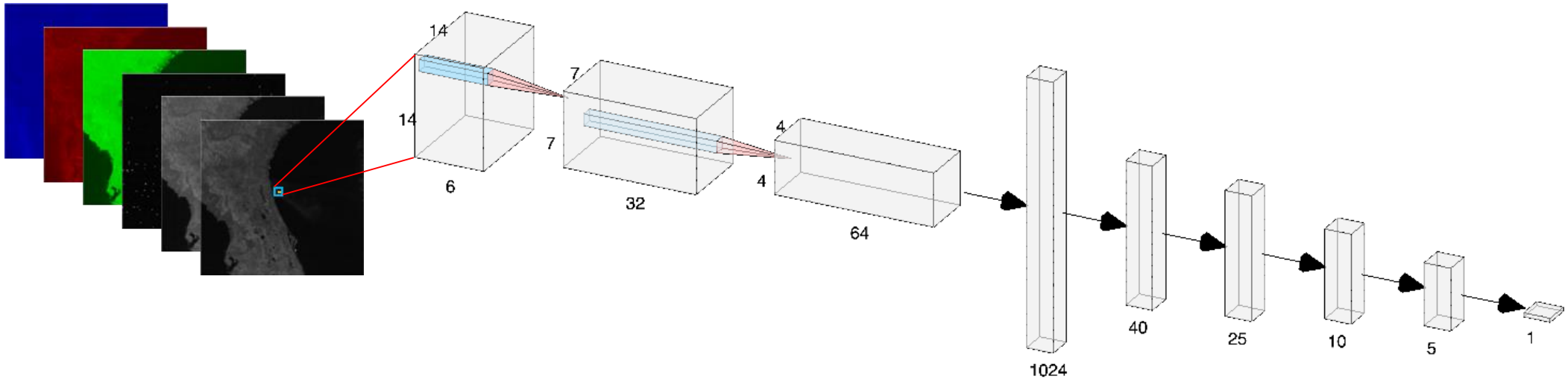

- Apply a pixel based Convolutional Neural Network (CNN)
  - Input (N*2)*(N*2) neighborhood of reflectance values surrounding a center pixel (sample)
  - 3 convolutional layers
  - Each convolutional layer followed by max-pooling layer
  - Convolutional outputs are flattened into vectors

Model Architecture

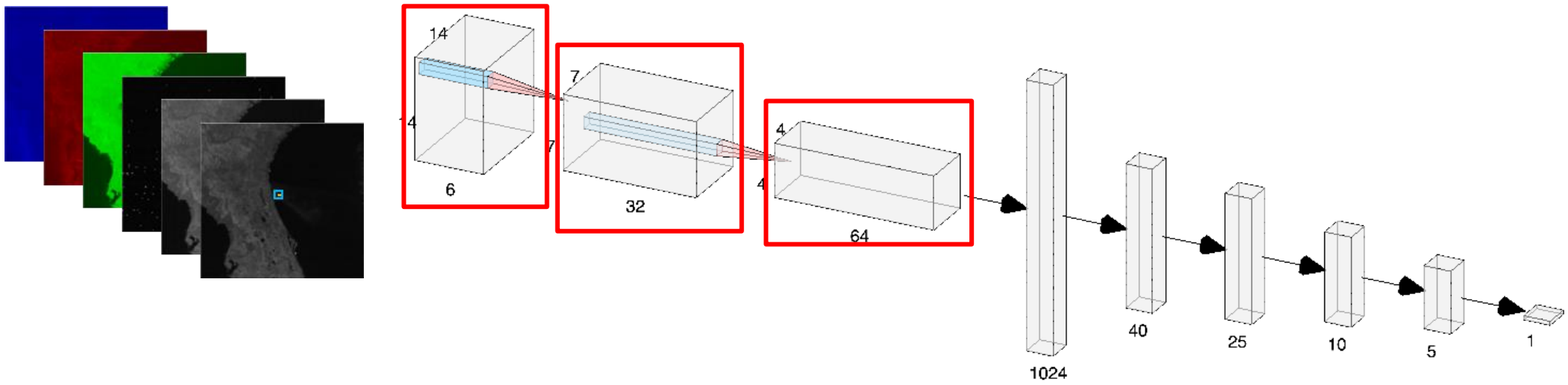

- Apply a pixel based Convolutional Neural Network (CNN)
  - Input (N*2)*(N*2) neighborhood of reflectance values surrounding a center pixel (sample)
  - 3 convolutional layers
  - Each convolutional layer followed by max-pooling layer
  - Convolutional outputs are flattened into vectors

Model Architecture

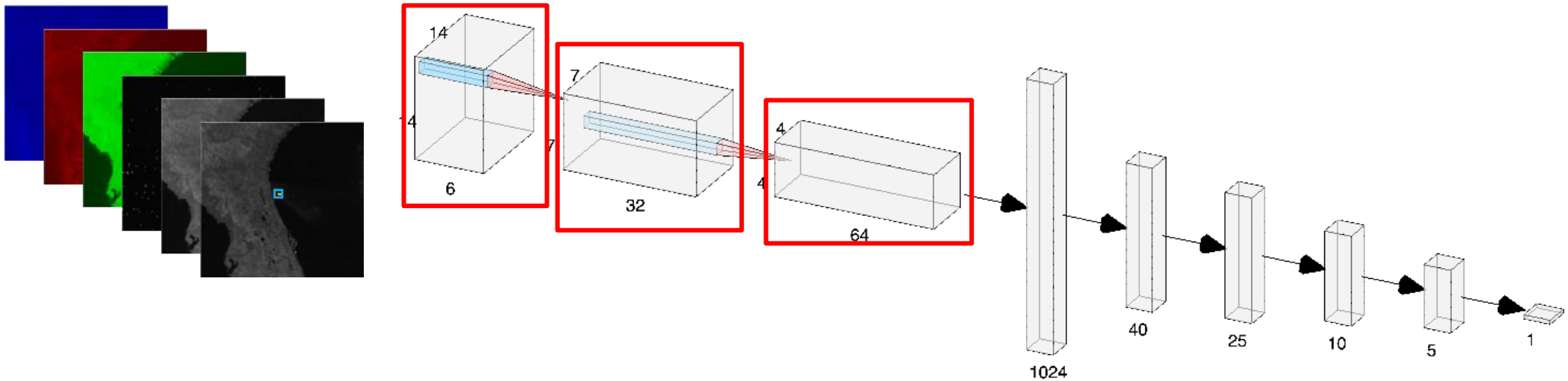

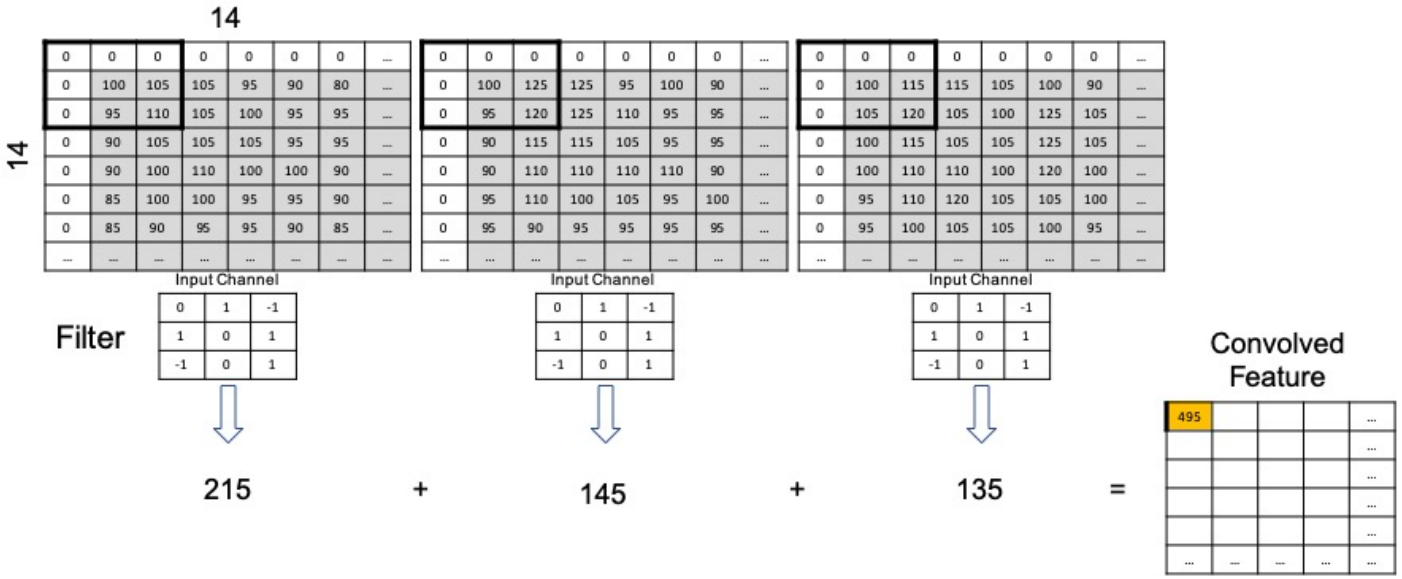

Model Architecture

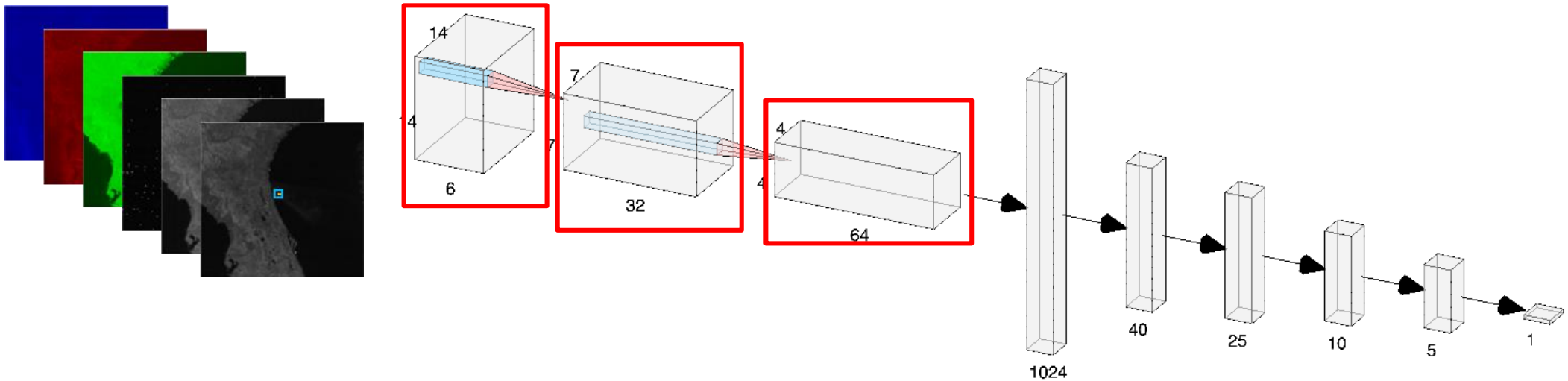

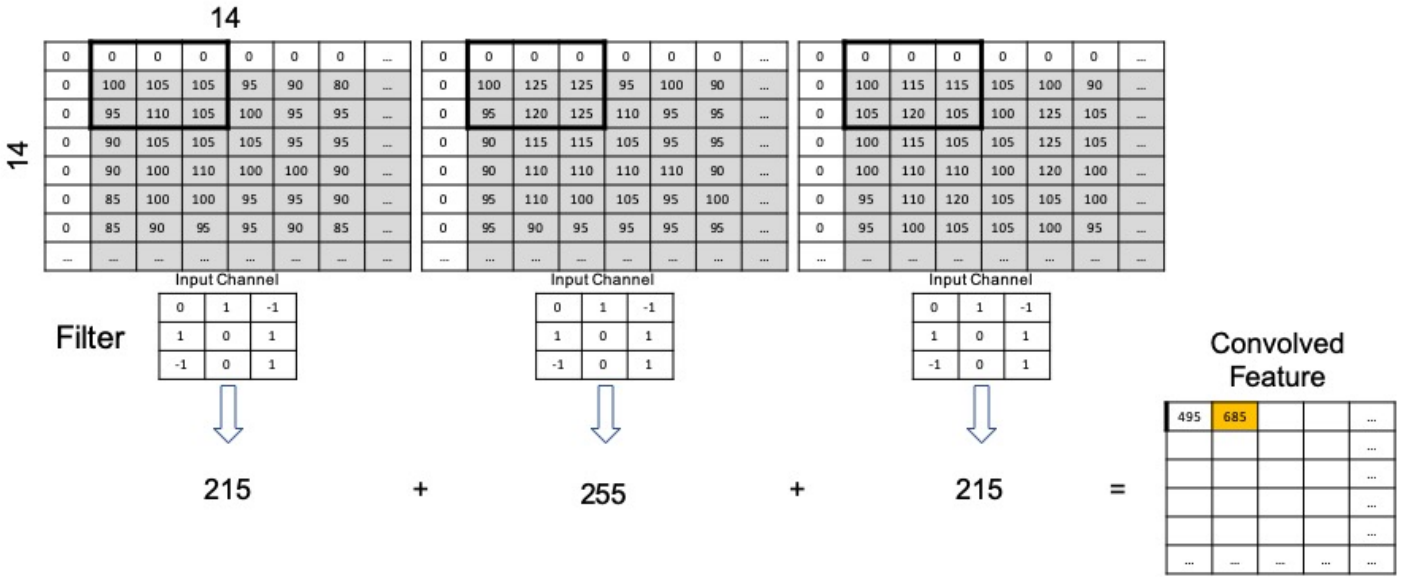

Model Architecture

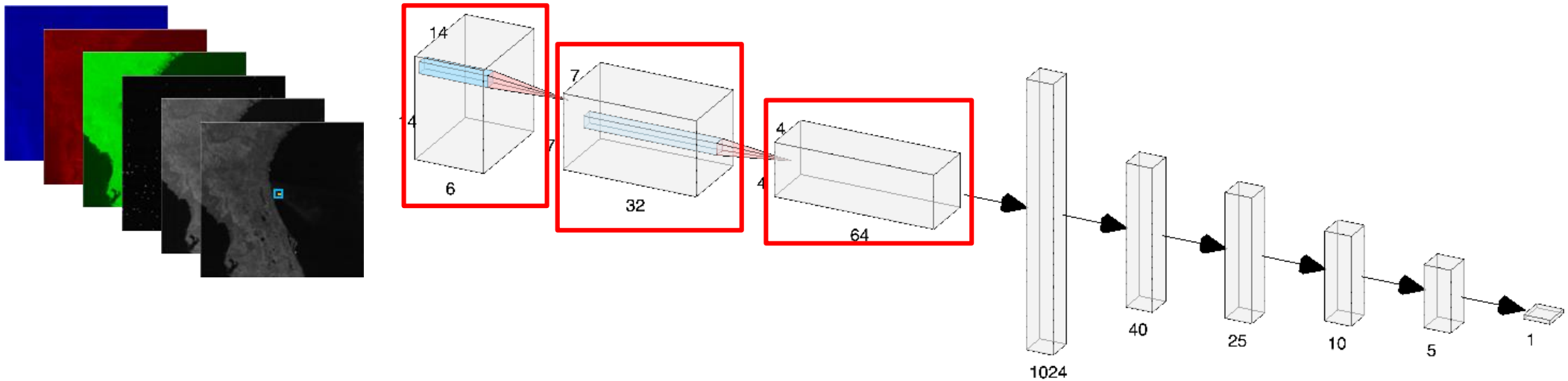

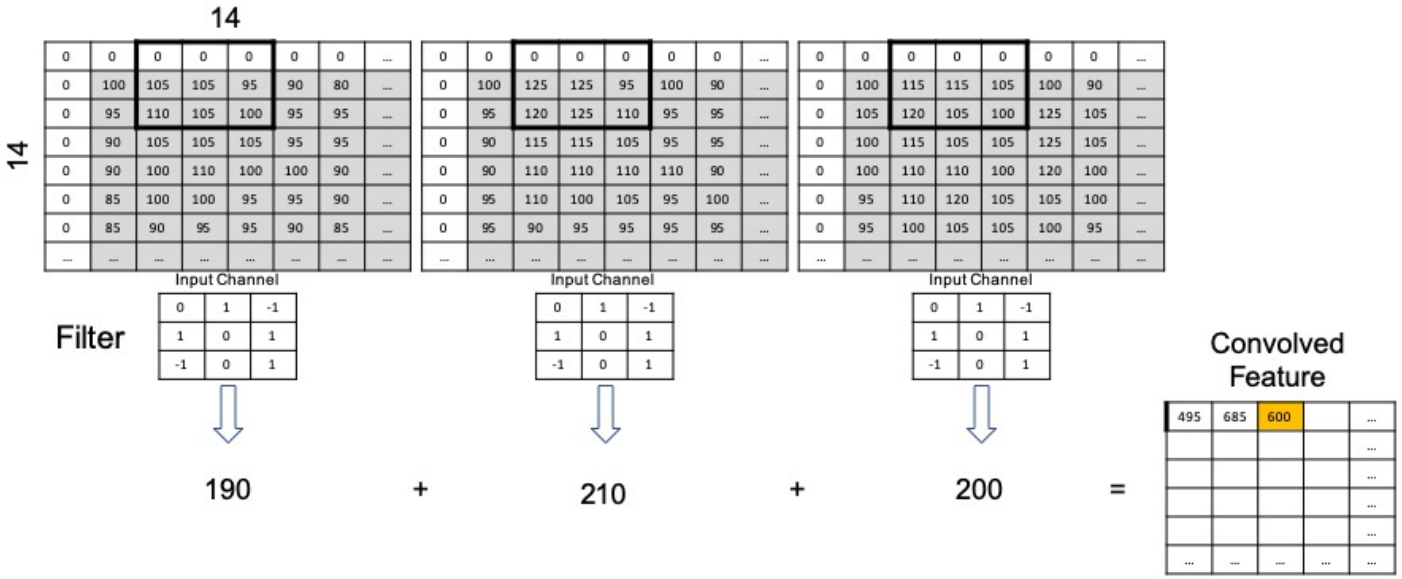

Model Architecture

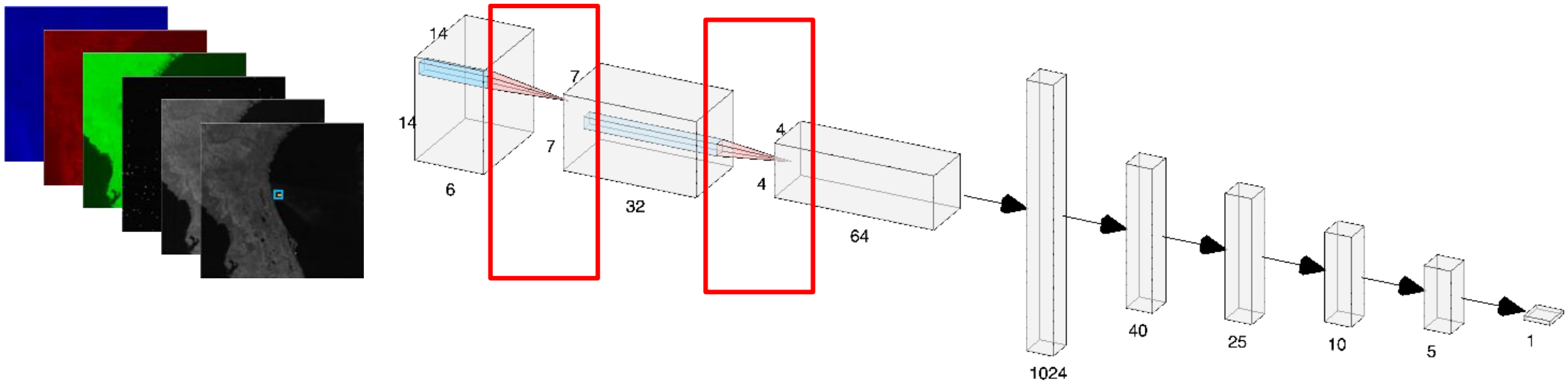

- Apply a pixel based Convolutional Neural Network (CNN)
  - Input (N*2)*(N*2) neighborhood of reflectance values surrounding a center pixel (sample)
  - 3 convolutional layers
  - Each followed by max-pooling layer
  - Convolutional outputs are flattened into vectors

Model Architecture

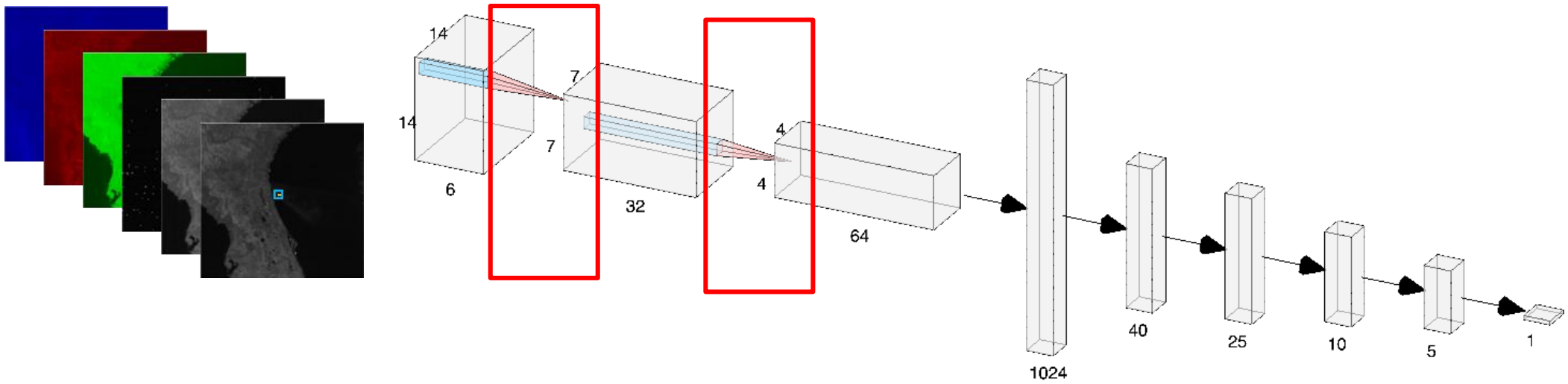

495	685	600	595	...
515	665	595	550	...
510	650	710	675	...
490	705	675	625	...
450	555	600	620	...
...	...	...	...	...

685	600	...
705	710	...
...	...	...

Model Architecture

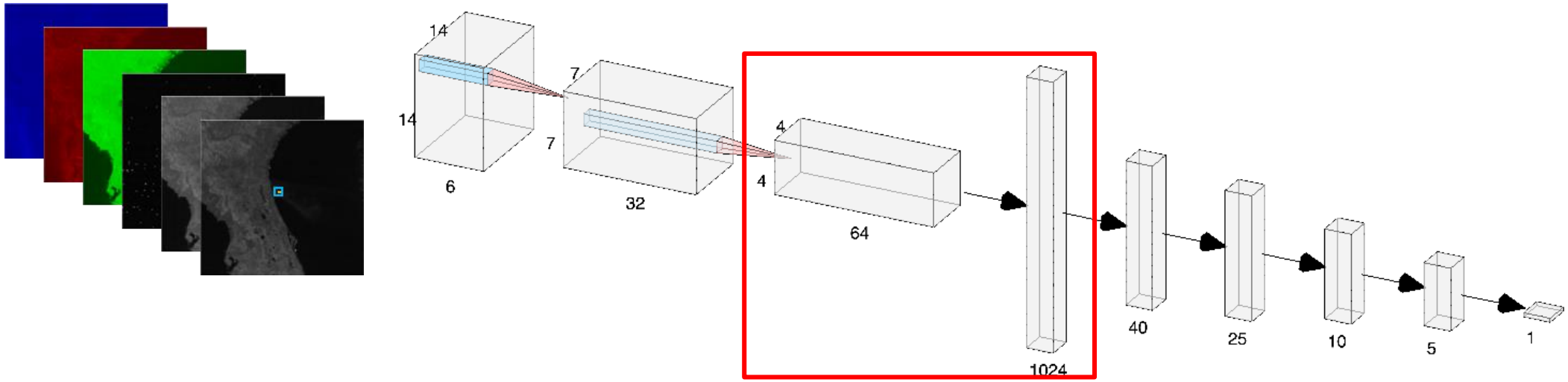

- Apply a pixel based Convolutional Neural Network (CNN)
  - Input (N*2)*(N*2) neighborhood of reflectance values surrounding a center pixel (sample)
  - 3 convolutional layers
  - Each followed by max-pooling layer
  - Convolutional outputs are flattened into vectors

Model Architecture

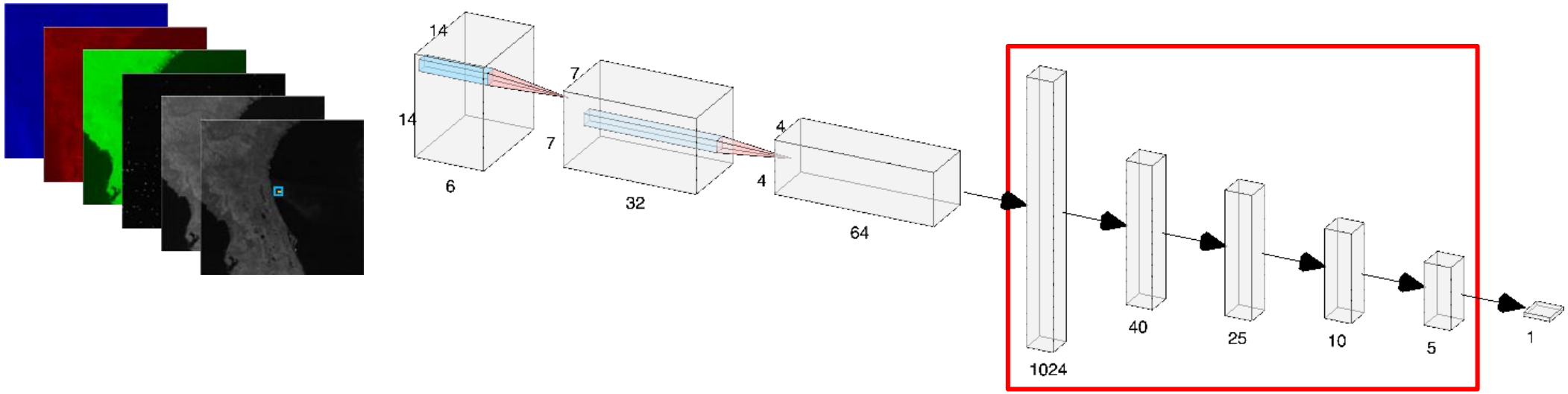

- Apply a pixel based Convolutional Neural Network (CNN)
  - 4 fully connected layers with activation function calculation g(Wx + b)
    - x is the flattened input vector
    - W is the weight matrix
    - b is the bias vector
  - Dropout for each fully connected layer

Model Architecture

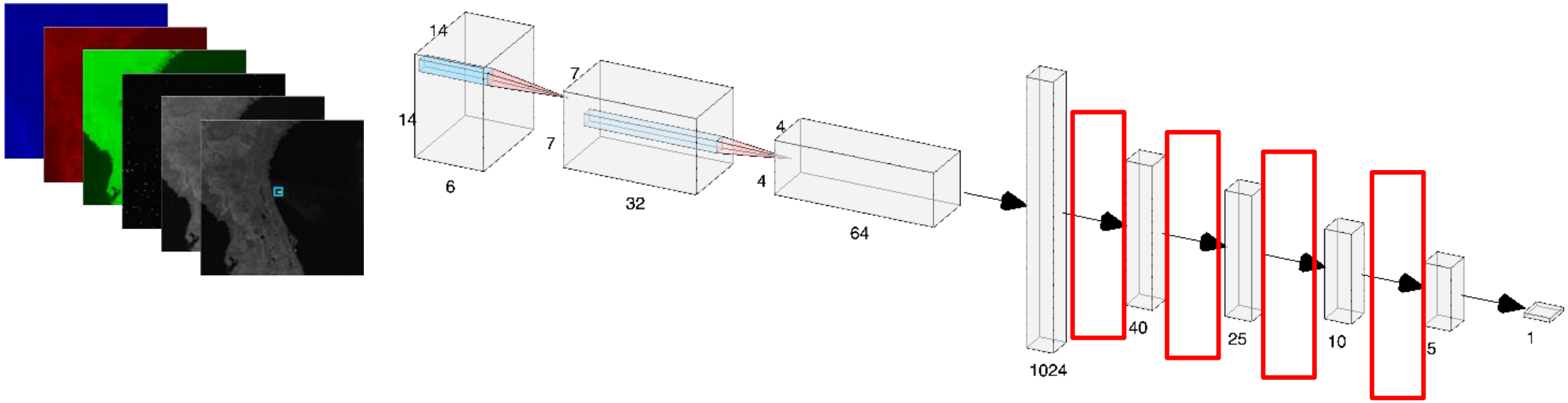

- Apply a pixel based Convolutional Neural Network (CNN)
  - 4 fully connected layers with activation function calculation g(Wx + b)
    - x is the flattened input vector
    - W is the weight matrix
    - b is the bias vector
  - Dropout randomly for each fully connected layer

Model Architecture

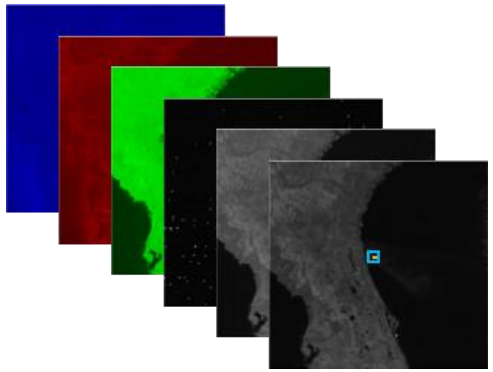

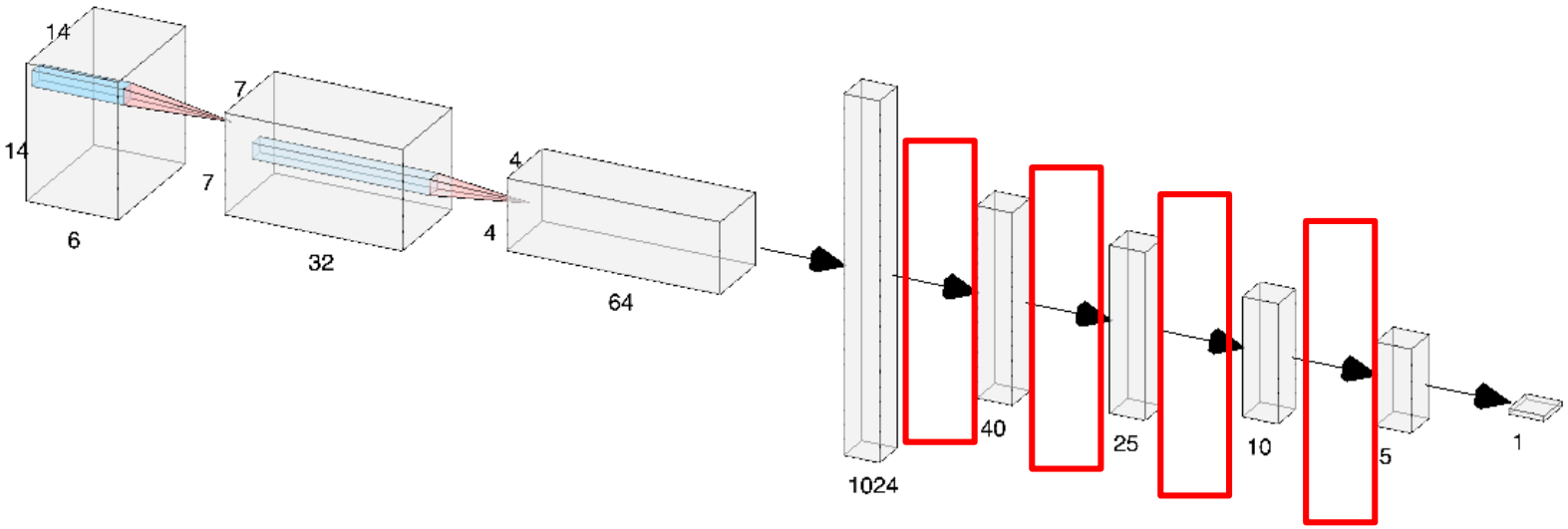

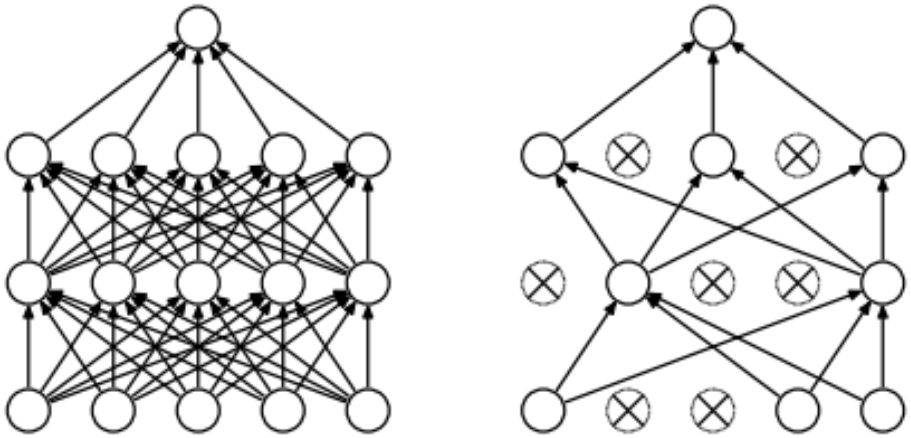

(a) Standard Neural Net (b) After applying dropout.

Model Architecture

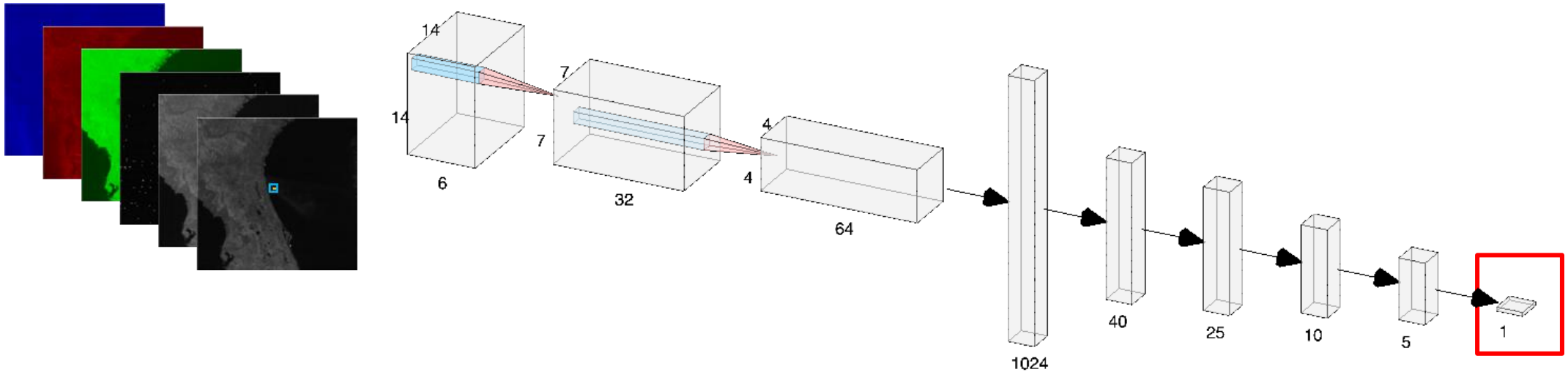

- The model outputs the probability, ranging from 0 to 1, that a pixel is smoke determined by a sigmoid function

$$p(x) = \frac{1}{1 + e^{-x}}$$

- p > 0.5 threshold applied to define smoke

Neighborhood Selection

- Best neighborhood size (N) determined by iterating model development and testing for increasing N
  - All other parameters including data, learning rate and model hyper-parameters are held constant
- Best model selected when validation loss did not improve for 20 epochs

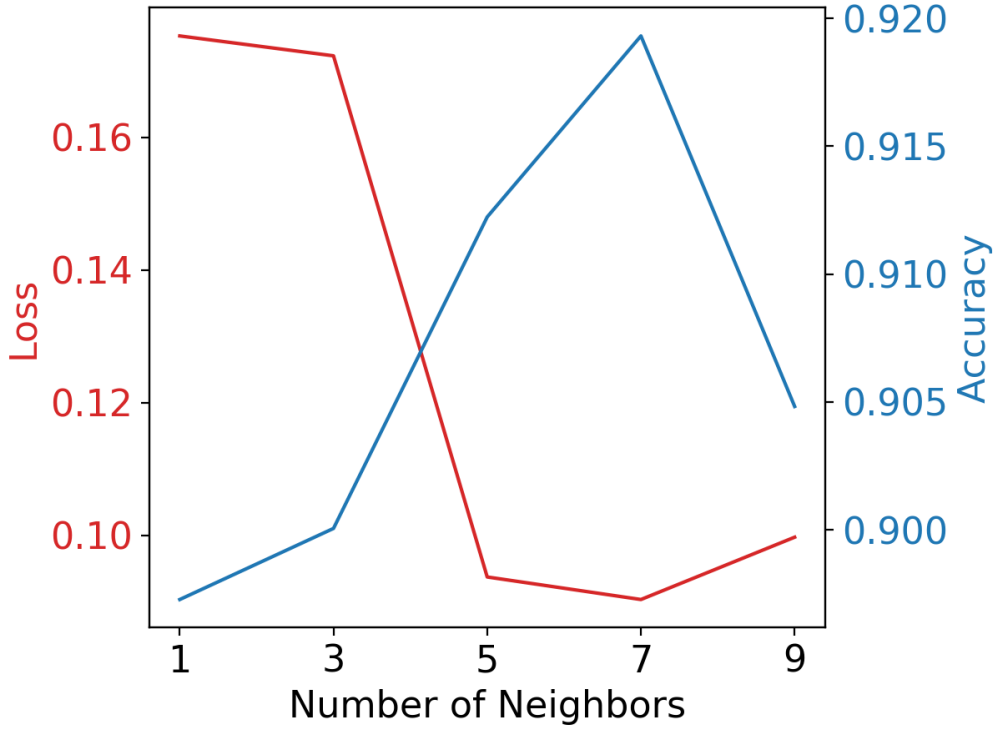

Development Testing

N	Precision	Recall	F1-Score	Accuracy
1	0.654	0.328	0.437	0.897
3	0.650	0.384	0.483	0.900
5	0.724	0.449	0.554	0.912
7	0.835	0.419	0.558	0.919
9	0.639	0.498	0.560	0.905

$$Precision = \frac{TP}{TP + FP}$$

$$Recall = \frac{TP}{TP + FN}$$

$$Accuracy = \frac{TP + TN}{TP + TN + TP + FN}$$

$$F1\ Score = 2 * \frac{Precision\ * Recall}{Precision + Recall}$$

- The F1 Scores, or the harmonic mean of Precision and Recall, for N=5,7,9 is comparable
  - Trade-off between quality and quantity of smoke predictions
- Best model has low false positive detection rate which drives high precision
  - Prefer conservative identification over incorrect classification
- Accuracy artifact of large number of True Negatives

Results

- Model updated to account for variation in solar zenith angle
  - The training and testing datasets for the updated model differ from that used for the initial development
  - Results are comparable between the initial and updated models
- Better predictive capability of smoke over water
  - Compared to land, the relative decrease in true negatives over water drives a slight decrease in accuracy

N=7	Precision	Recall	F1-Score	Accuracy
Dev.	0.835	0.419	0.558	0.919
All	0.736	0.453	0.561	0.923
Land	0.631	0.383	0.476	0.928
Water	0.923	0.585	0.717	0.900

2 May 2018 - Southern Florida

- Smoke identified over both land and ocean
  - Model identifies well defined plumes for scenes with absence of complex features
  - Probabilities resemble visually observed optical thickness
- Predictions closer resemblance to quality controlled shapefiles

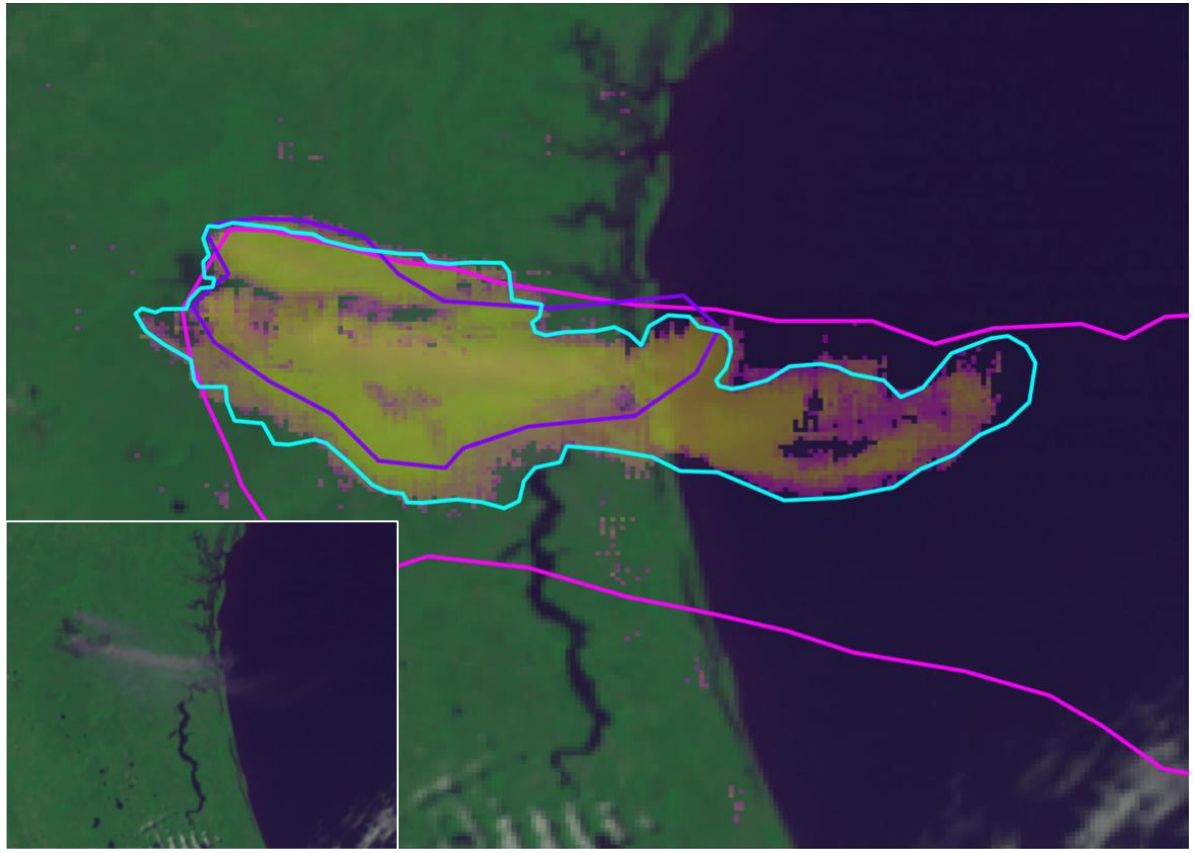

GOES 16 pseudo-RGB with contoured model predictions (shading), HMS shapefiles (magenta and purple), and subject matter quality controlled shapefile (blue).

24 March 2018 - Southern Florida

- Distinguishable from chlorophyll commonly found in coastal settings
- Discriminate smoke from fair weather cumulus cloud
- Spectral information for other classes not provided to the model

	Precision	Recall	F1-Score	Accuracy
All	0.744	0.604	0.666	0.948
Land	0.847	0.244	0.379	0.976
Water	0.742	0.623	0.677	0.943

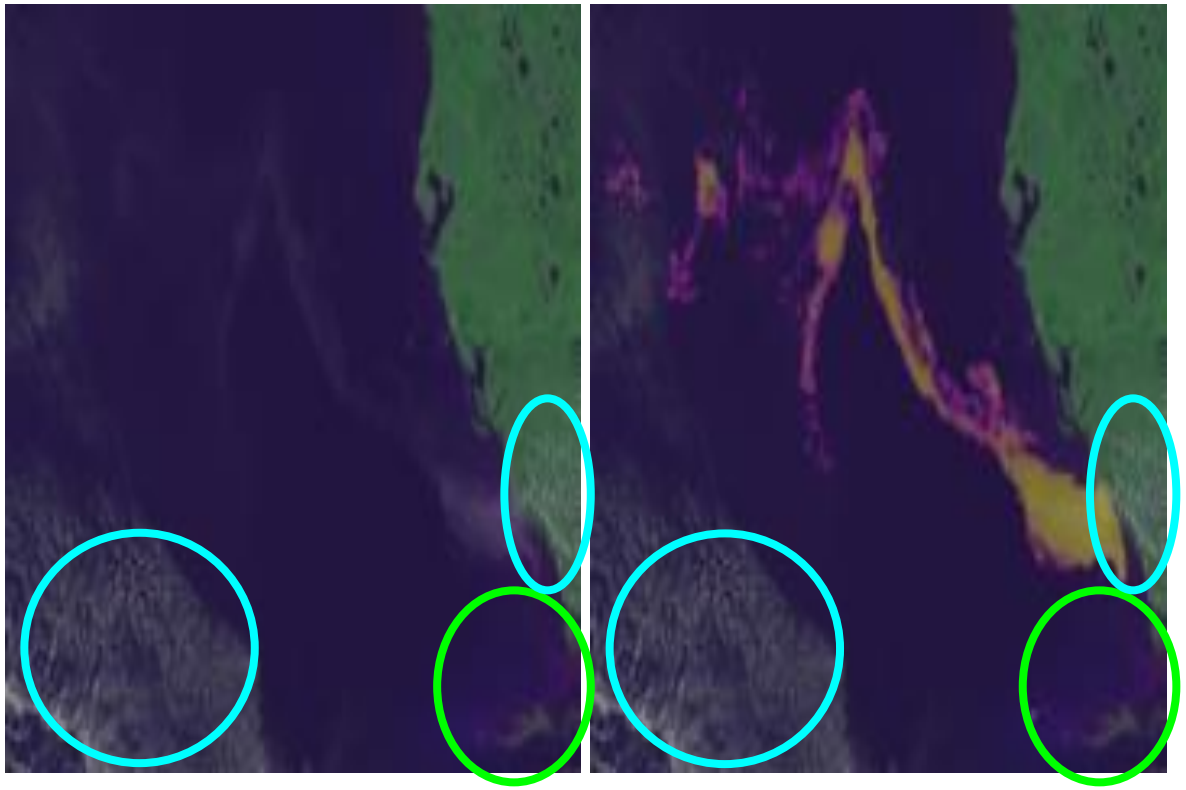

GOES 16 pseudo-RGB (left) with shaded contoured model predictions (right).

11 June 2017 - Southern Rocky Mts. United States

- Successfully discriminates land surface snow/ice from smoke
  - Over snow capped mountains for this case
- Detection challenges for optically thin smoke over arid regions

	Precision	Recall	F1-Score	Accuracy
All	0.848	0.318	0.462	0.977
Land	0.848	0.319	0.463	0.977
Water	N/A	N/A	N/A	0.984

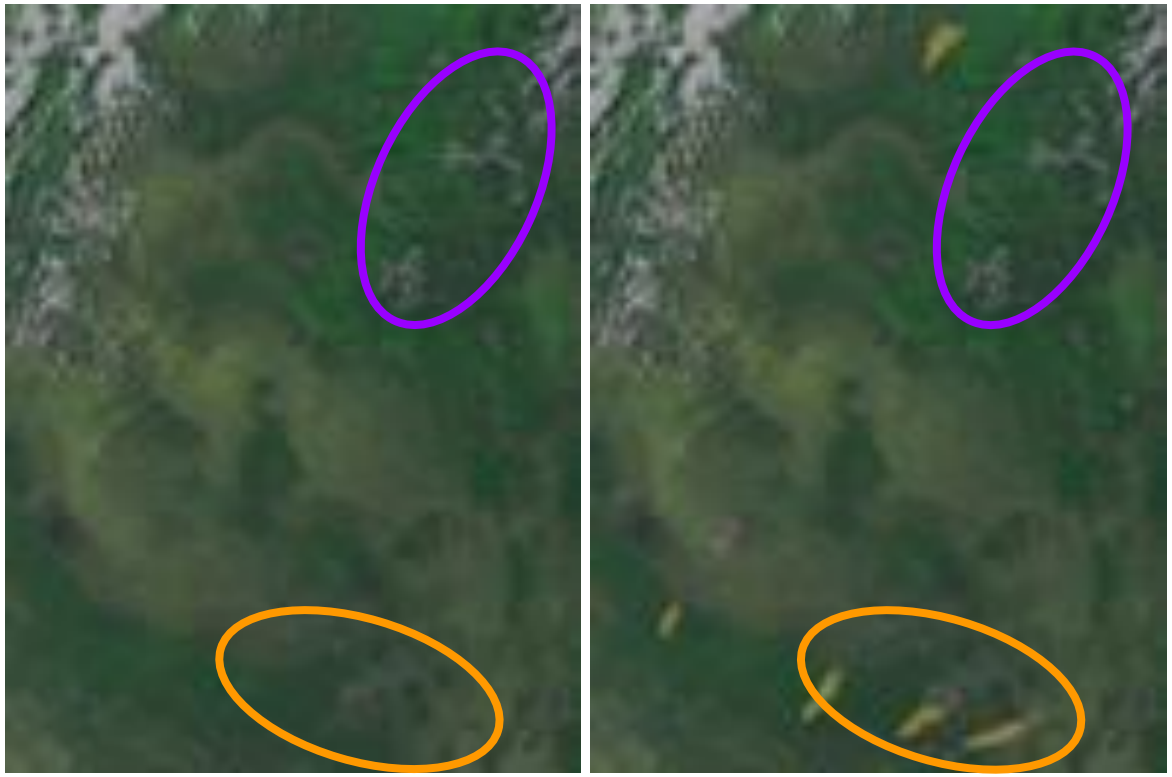

GOES 16 pseudo-RGB (left) with shaded contoured model predictions (right).

9 October 2017 - Central California

- Large and small plumes
- Identification over both land and ocean
- Coastal stratus clouds

	Precision	Recall	F1-Score	Accuracy
All	0.970	0.919	0.944	0.961
Land	0.904	0.754	0.823	0.920
Water	0.986	0.965	0.975	0.980

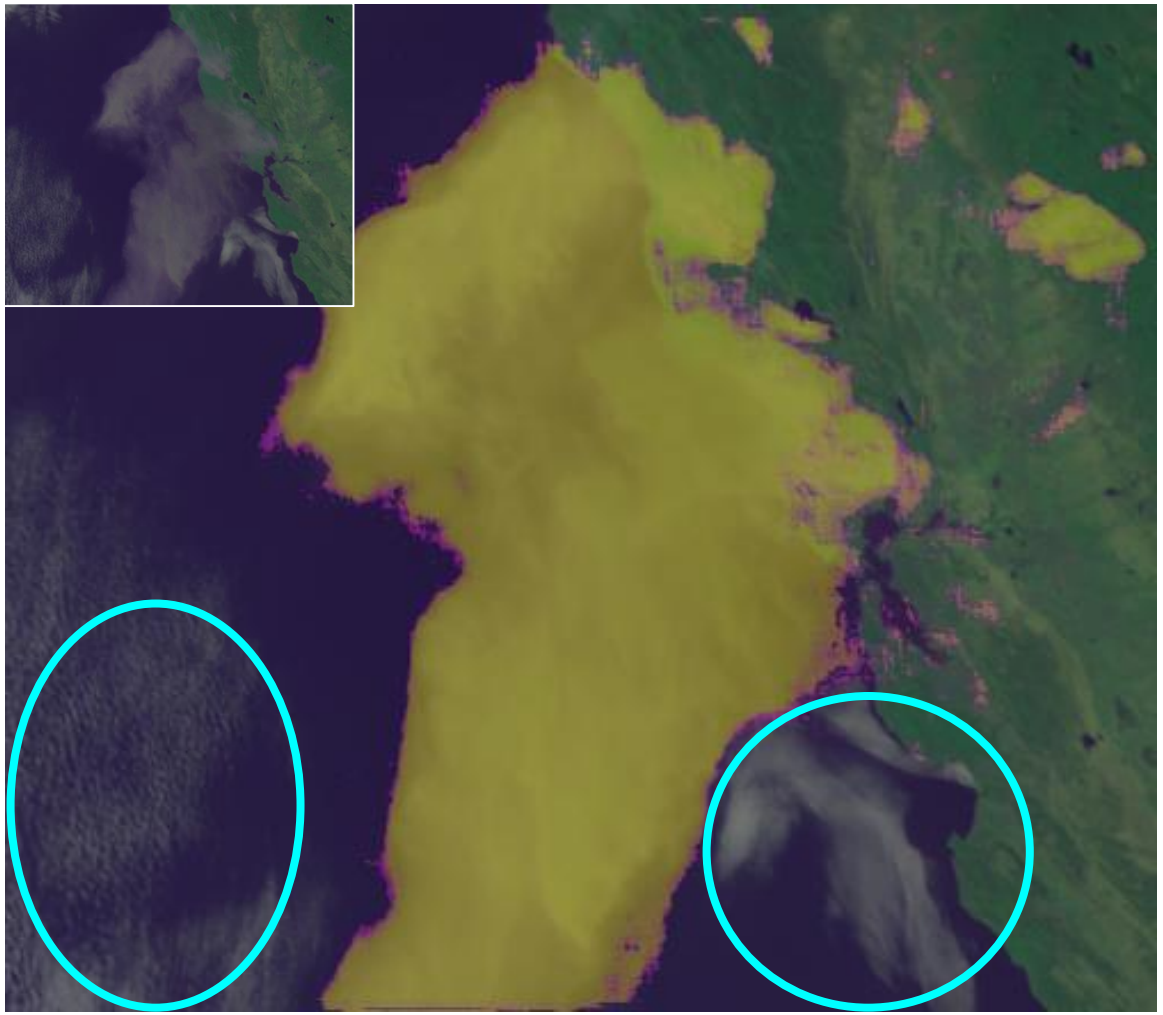

GOES 16 pseudo-RGB (left) with shaded contoured model predictions (right).

20 May 2018 - Southern Arizona

- Smoke not detected at very low sun angles
  - Compounded by low optical thickness over relatively high reflective surface
  - Probability of being smoke is low for few pixels that are identified

	Precision	Recall	F1-Score	Accuracy
All	0.995	0.093	0.171	0.823
Land	0.995	0.093	0.171	0.822
Water	0.923	0.585	0.717	1.000

GOES 16 pseudo-RGB (left) with shaded contoured model predictions (right).

14 April 2018 - Southern Rocky Mts. United States

- Overprediction of plume extent
  - Artifact of large (N=7) neighborhood size
  - Non-zero floor to number of false positives

	Precision	Recall	F1-Score	Accuracy
All	0.830	0.738	0.781	0.981
Land	0.830	0.738	0.781	0.981
Water	N/A	N/A	N/A	0.993

GOES 16 pseudo-RGB (left) with shaded contoured model predictions (right).

17 April 2018 - Southern Rocky Mts. United States

- Other atmospheric aerosols not classified as smoke
- Large dust storm case
  - Represents a major source of aerosols in the atmosphere
  - Expected over regions where smoke is also common

	Precision	Recall	F1-Score	Accuracy
All	N/A	N/A	N/A	0.996
Land	N/A	N/A	N/A	0.996
Water	N/A	N/A	N/A	N/A

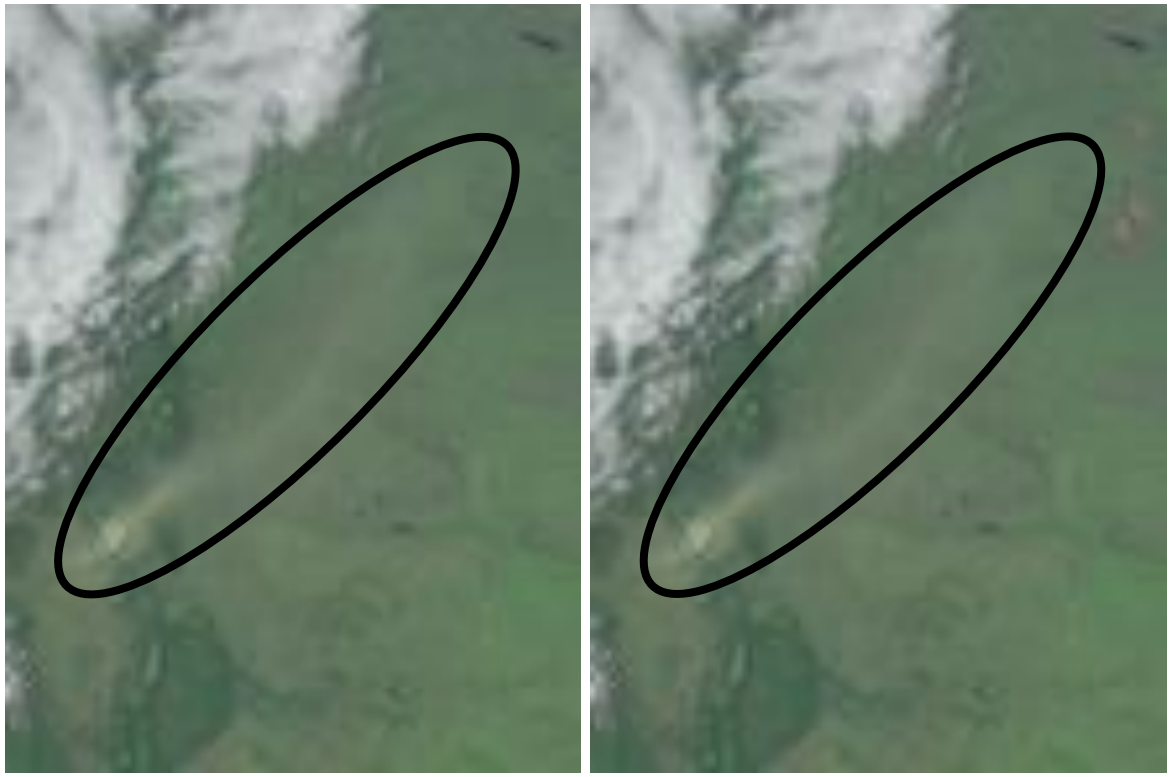

GOES 16 pseudo-RGB (left) with shaded contoured model predictions (right).

Operational Capabilities

- Currently testing new deployment in operational environment
  - Anticipate operational October 2019
- Fully deployed in the cloud using Amazon S3 and Cloud Computing Services
- End-to-end prediction and visualization pipeline
  - Model prediction available ~15 min after data availability
    - Preprocessing ~10 min
    - Prediction and Postprocessing ~5min
  - Full disk GOES observation available ~10 min intervals

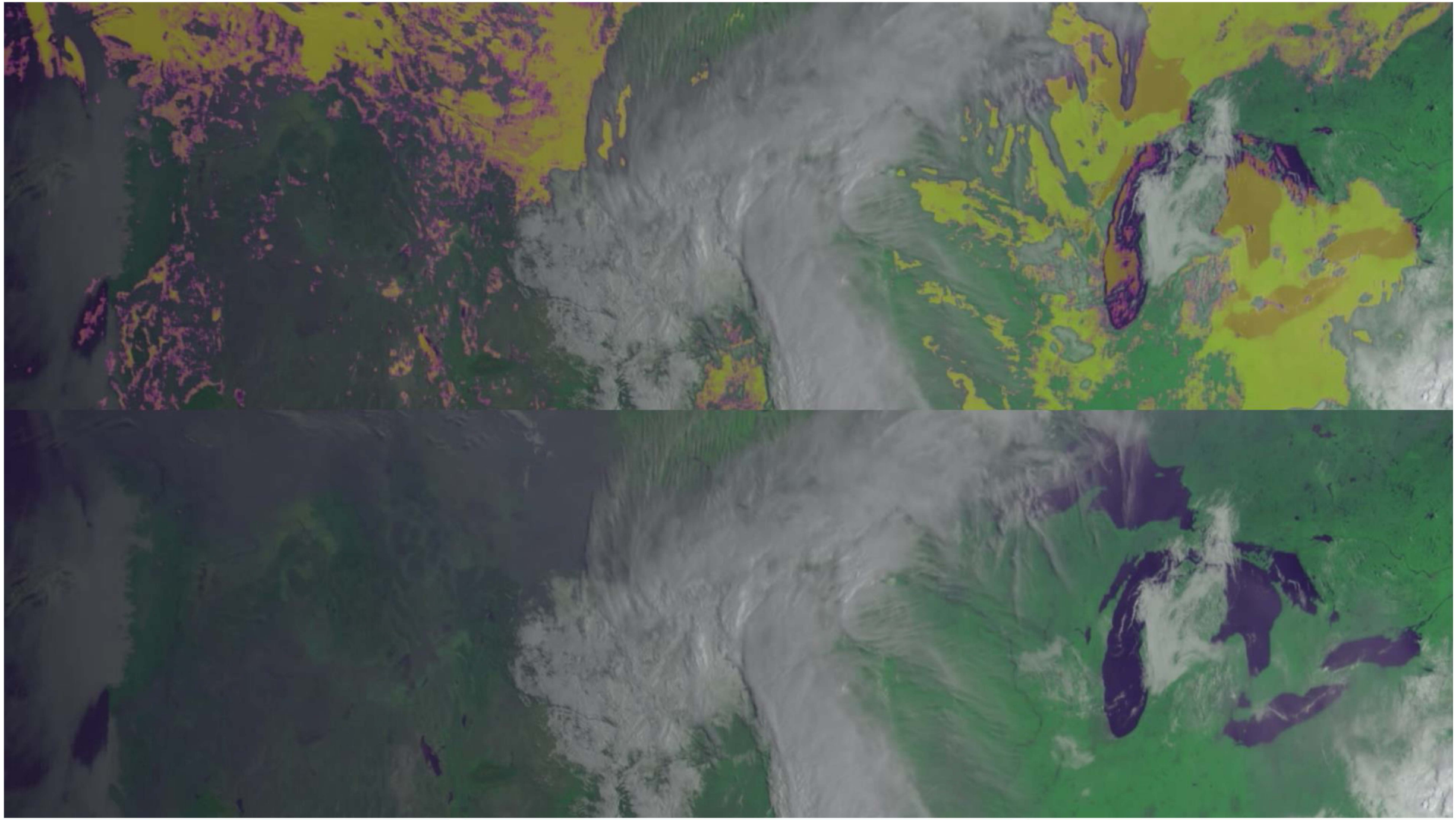

Operational Capabilities - Postprocessing

- Spatial grouping of predicted pixels to define plumes
  - Convert predicted pixels to bitmap image
  - Blurring to smoothen edges
  - Contour blurred image to group smoke pixels into plumes
  - Plumes visualized and geojson representation of plume extents available for download in the Phenomena Portal (http://phenomena.surge.sh)

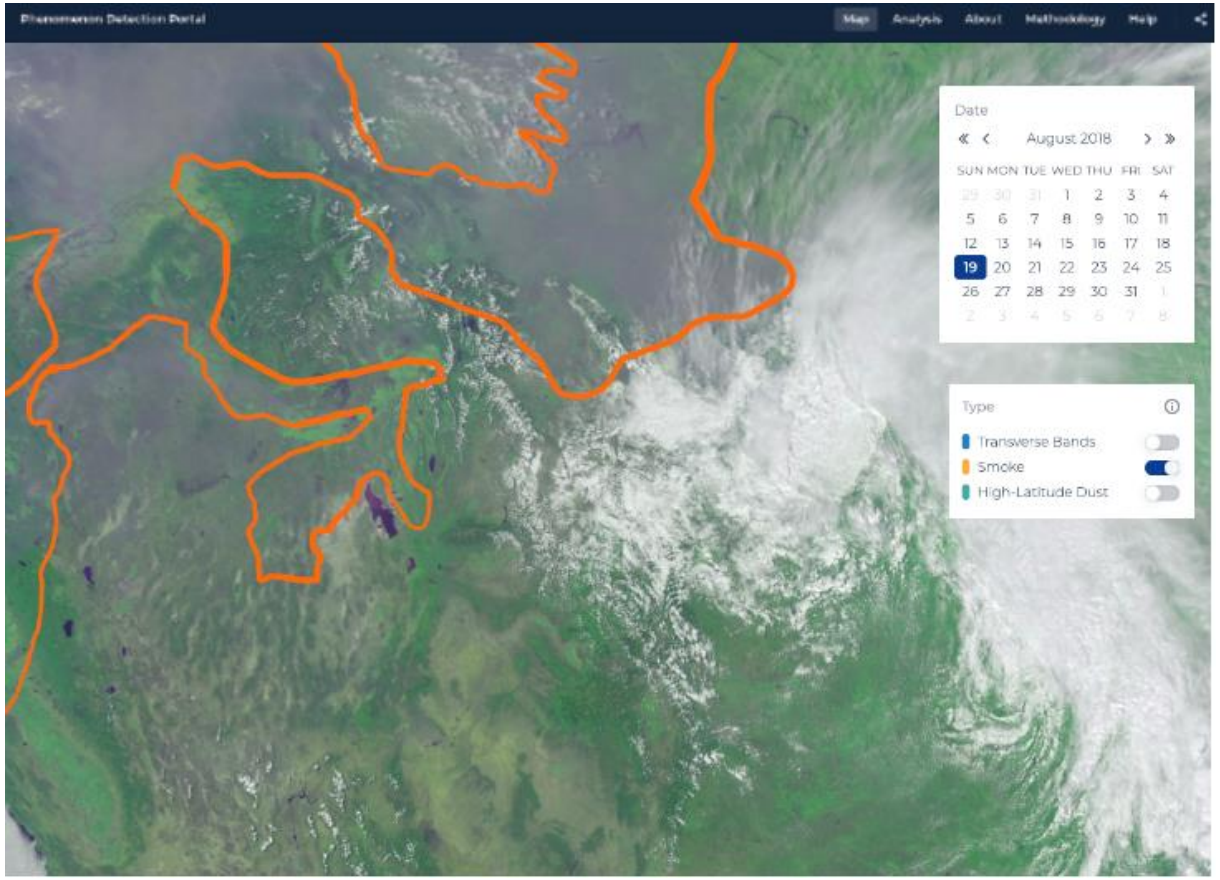

Summary

- Developed end-to-end machine learning smoke detection pipeline for next-generation of geostationary satellites
  - Well curated smoke extent dataset
  - Scalable smoke detection deep learning model, requiring only smoke information, and capable of detecting smoke with:
    - Varying optical thicknesses
    - Over low and high reflectance background surfaces
    - Discriminates from features with spectral similarities
  - Fully automated operational deployment of model in development
    - Plume visualization and extent data accessible in online platform

Future work

- Expand the training data to account for identified weaknesses
  - Low sun angles
  - Thin smoke over arid regions
  - Thin clouds
- Refinement of the machine learning model
  - Confirmation of N=7 as best performing model
    - Explore trade-off between neighborhood size and prediction capabilities
  - Stepwise band selection considering all 16 GOES bands
  - Robust model validation
    - Band exclusion to identify contribution to feature learning
- Performance assessment for operational improvements

Thank you!

mr0051@uah.edu

aaron.kaulfus@nsstc.uah.edu

IMPACT
Interagency Implementation and Advanced Concepts Team