https://ntrs.nasa.gov/search.jsp?R=20170009588 2019-04-30T05:01:08+00:00Z

# Testing and Modeling of the Mars Atmospheric Processing Module

**Anthony Muscatello, Paul Hintze, Anne Meier, Elspeth M. Petersen, Jon Bayliss, Ricardo Gomez Cano, Rene Formoso, Malay Shah, Jared Berg, Bruce Vu, Alexander Walts, and Rupert Lee**

**NASA – Kennedy Space Center**

**AIAA SPACE 2017**

Orlando, FL

September 12-14, 2017

# Outline

- Introduction
- $CO_2$ Freezer and Sabatier Subsystem Testing
- Sabatier Temperature and Catalyst Testing
- $CO_2$ Freezer Testing and Modeling
- Conclusions
- Acknowledgments

# MARCO POLO Project

- **ISPP: In Situ Propellant Production**
  - Demonstrate production of Mars Sample Return propellant
  - Reduce risk for human Mars missions
- **MARCO POLO - M**ars **A**tmosphere and **R**egolith **CO**llector/**P**r**O**cessor for **L**ander **O**perations
  - Started in 2011
  - Continues as the **Mars ISRU Pathfinder** project
- The **A**tmospheric **P**rocessing **M**odule (**APM**)
  - Mars $CO_2$ Freezer Subsystem
  - Sabatier (Methanation) Subsystem
- Collect, purify, and pressurize $CO_2$ (≥88 g/h)
- Convert $CO_2$ into methane ($CH_4$) (32 g/h) and water (72 g/h) with $H_2$
- Other modules mine regolith, extract water from regolith, purify the water, electrolyze it to $H_2$ and $O_2$, send the $H_2$ to the Sabatier Subsystem, and liquefy/store the $CH_4$ and $O_2$



Interbartolo III, M.A., et al. "Prototype development of an integrated Mars atmosphere and soil-processing system." Journal of Aerospace Engineering 26.1 (2012): 57-66.

# Lander Design Concept

Kennedy Space Center
Science, Technology and Engineering

Exploration Research and Technology Programs

## Atmo Processing Module:

- $CO_2$ capture from simulated Mars atmosphere (KSC)
- Sabatier converts $H_2$ and $CO_2$ into Methane and water (KSC)

## C&DH/PDU Module: (JSC)

- Central executive S/W
- Power distribution

## Soil Processing Module:

- Soil Hopper handles 30 kg (KSC)
- Soil dryer uses $CO_2$ sweep gas and 500 deg C to extract water (JSC)

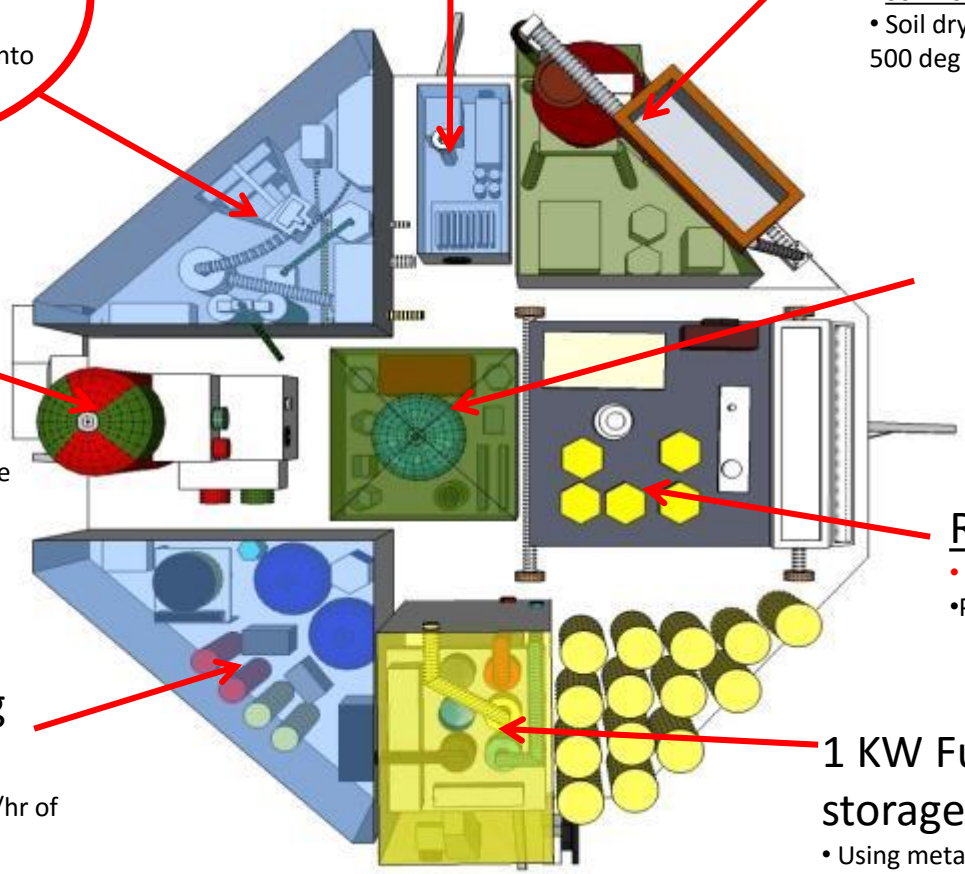

## Liquefaction Module: (TBD)

- Common bulkhead tank for Methane and Oxygen liquid storage

## Water Cleanup Module: (KSC)

- Cleans water prior to electrolysis
- Provides clean water storage

## RASSOR 2.0: (KSC)

- Excavator
- Provides feed to Soil Dryer

## Water Processing Module: (JSC)

- Currently can process 520g/hr of water (max 694 g/hr)

## 1 KW Fuel Cell and consumable storage (JSC & GRC)

- Using metal hydride for H storage due to available
- 1 KW No Flow Through FC (GRC)
- 10 KW main power FC not shown (JSC)

3m x 3m octagon lander deck

# Atmospheric Processing Module

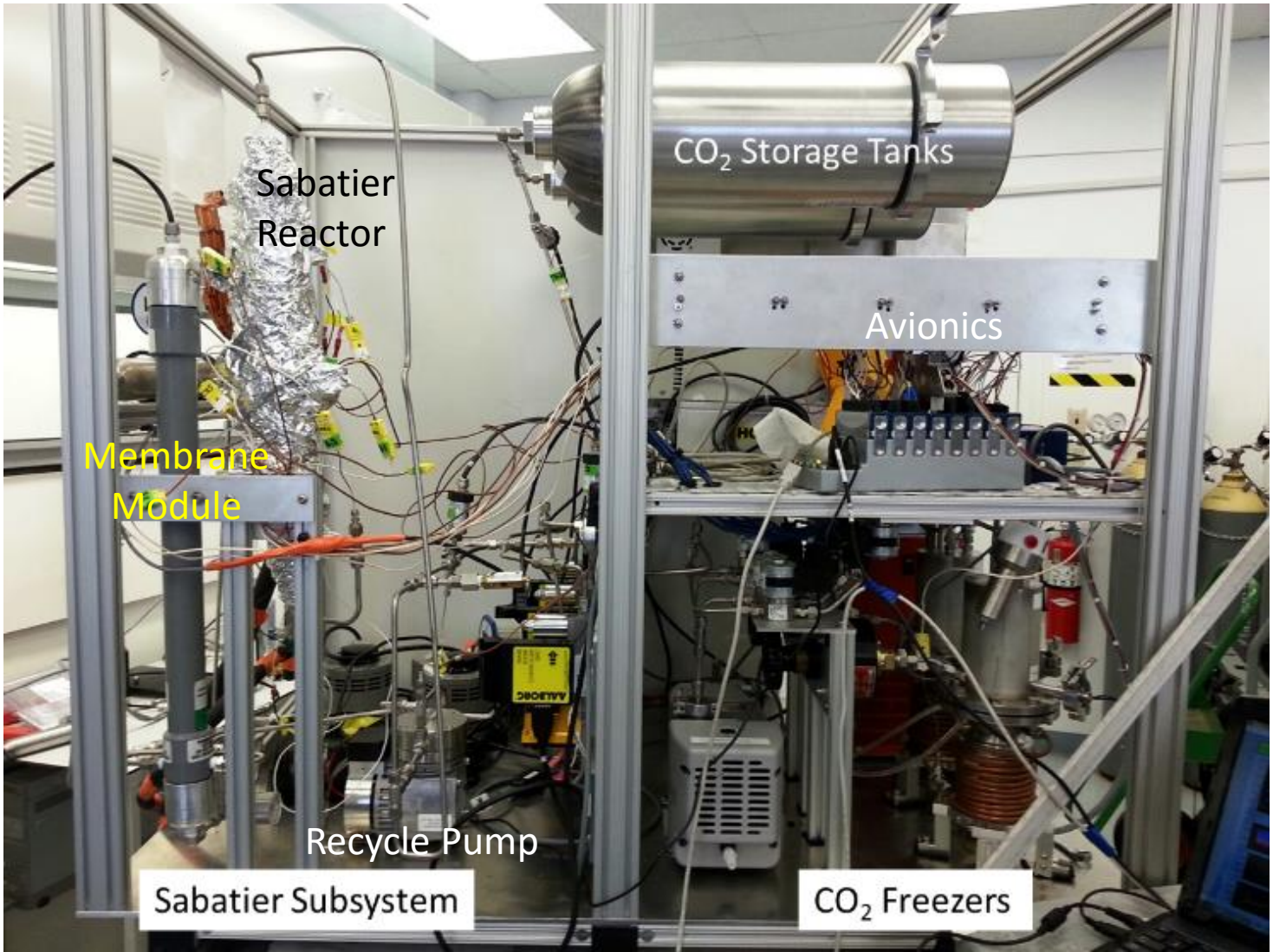


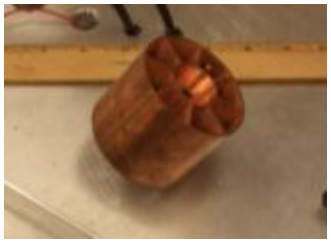

Copper Heat Exchanger

$CO_2$ Freezers and Chiller

# $CO_2$ Freezer and Sabatier Subsystem Testing

- Previously demonstrated nominal operations of both the $CO_2$ Freezers and the Sabatier Subsystem (Earth & Space 2014 and 2016 Conferences)
- Measured power to freeze $CO_2$ at 0.22 W/kg (108% of theoretical) → 680 W for 3.1 kg $CO_2$/h (full scale ISRU module)
  - Froze ≥70% of incoming $CO_2$ @ ~100 g/h
- Sabatier subsystem produced 32 g $CH_4$/h at >99.9% pure
- Water production rate = 64-70 g/h
  - Not due to vapor in $CH_4$ or in membrane module
  - Still looking for missing water

# $CO_2$ Freezer and Sabatier Subsystem Testing (Cont.)

- Tested CO2 Freezers @ 1.0-1.6 SLPM (nominal 1.2 SLPM)
  - Froze 87-71% of incoming $CO_2$
- Tested Sabatier subsystem at 0.3-1.2 SLPM (nominal 0.75 SLPM)
  - 550°C maximum temperature observed
  - CO observed in product @ higher feed rates
- Performed "virtual" integrated test ("Dust to Thrust") w/other KSC hardware in Sept. 2016
  - Very successful
  - Met goals
  - $CO_2$ flow rate was 11% high due to Mass Flow Controller issues
  - https://www.youtube.com/watch?v=cRLnAeL3wdU (142,000 views so far!)
- Plan partial integrated KSC hardware test in October 2017
  - WCM on lander, transferring water through DTAU to a rover w/3 tanks: water, simulated liquid methane, and simulated liquid oxygen
  - APM transmitting and receiving data

## Results of the APM Virtual Integrated Test

| Test Duration, 6 h, 50 min | Total | Average Flow Rate | Average Mass Rate | Target | Delta, % |
|---|---|---|---|---|---|
| Methane Production | 243 liters | 0.831 SLPM | 35.6 g/h | 32 g/h | +11.1% |
| Water Production | 516.1 g | - | 75.5 g/h | 72 g/h | +4.9% (-5.8%) |
| Calculated $CO_2$ | | 0.831 SLPM | | 0.750 SLPM | +11.1% |

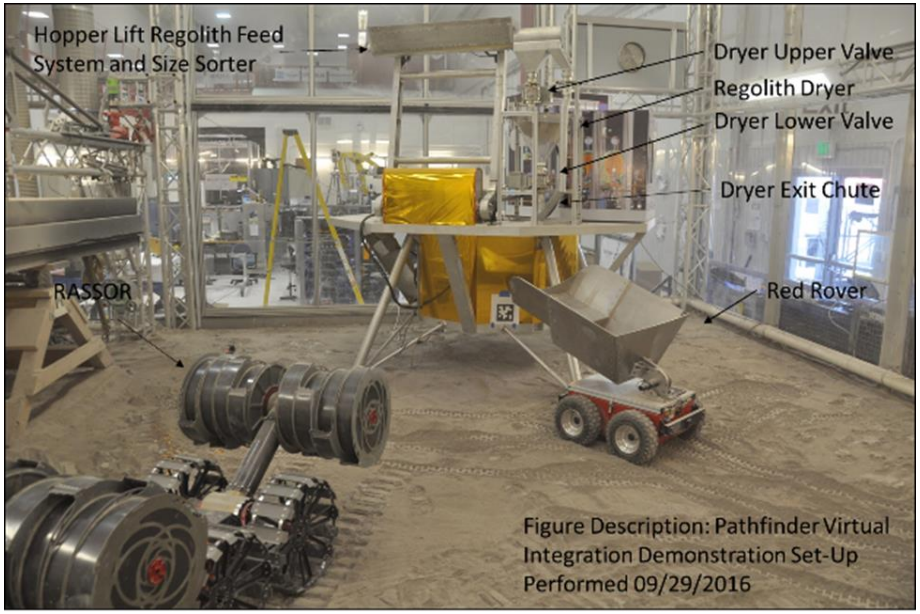

Figure Description: Pathfinder Virtual Integration Demonstration Set-Up Performed 09/29/2016

# Sabatier Temperature and Catalyst Testing

- Normal operating temps = 453-467°C
- At 1.25 SLPM $CO_2$, T = 586°C
- CO observed during test and subsequent tests
- $Ru/Al_2O_3$ catalyst much lighter w/broken pellets
- Sintering possible @>500°C
- Thermal shock investigated @450 and 600°C
- High temperatures experienced by the pellets or the rapid increase in temperature was the driving factor in the change in performance and not other factors such as poisoning

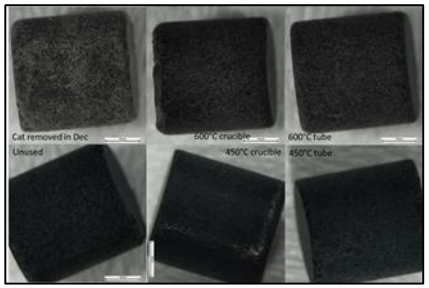


Catalyst pellets after five thermal cycles (magnification of 55x)

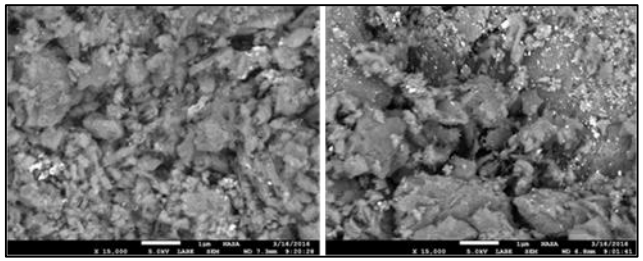

Unused catalyst (left) shows fewer bright specks than the spent catalyst (right) when imaged at 15,000x magnification on an FESEM

# $CO_2$ Freezer Testing and Modeling

- New NASA ISRU Project formed to develop full-scale Mars ISRU system
- Organized existing resources to develop physics-based models for scale-up
- Initiated modeling and testing of $CO_2$ Freezer and the Sabatier reactor
- Developed CFD/FEA/VOF (Volume of Fluid) model of existing $CO_2$ freezer and "Ferris Wheel" cold head
- Sabatier reactor modeling reported at ICES-2017 and TFAWS
  - Good agreement between model and experimental results

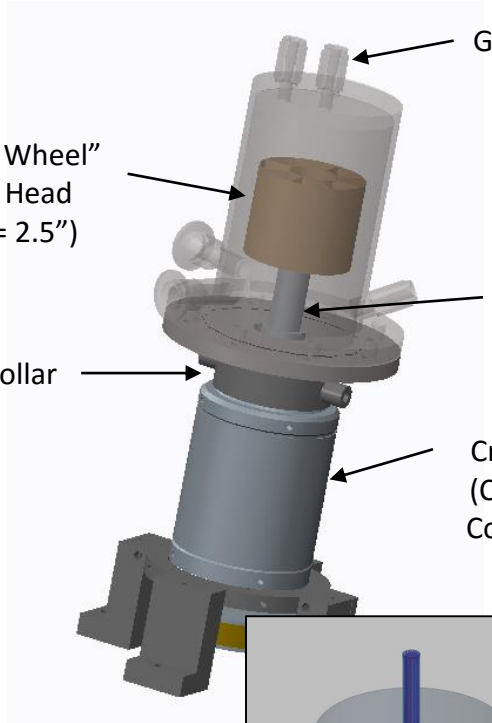


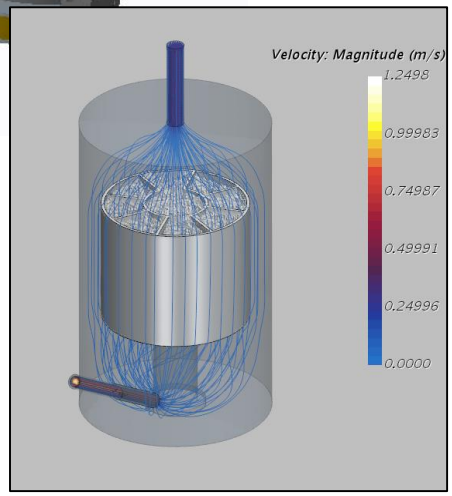


**Creo 3D model of current $CO_2$ Freezer & gas flow streamlines around cold head w/VOF model**

# $CO_2$ Freezer Testing and Modeling (Cont.)

- Opened freezing chamber to observe actual dry ice distribution on Ferris Wheel cold head
- Designed, built, and tested alternate cold heads at long durations

"Starburst" cold head, a precursor to the Ferris Wheel cold head

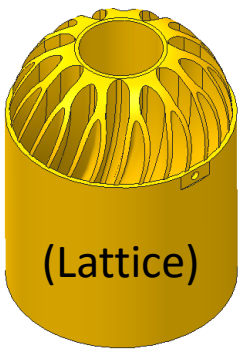

"Branching" cold head CAD drawing & 3D printed version (GRCop-84) from MSFC mounted on cryocooler

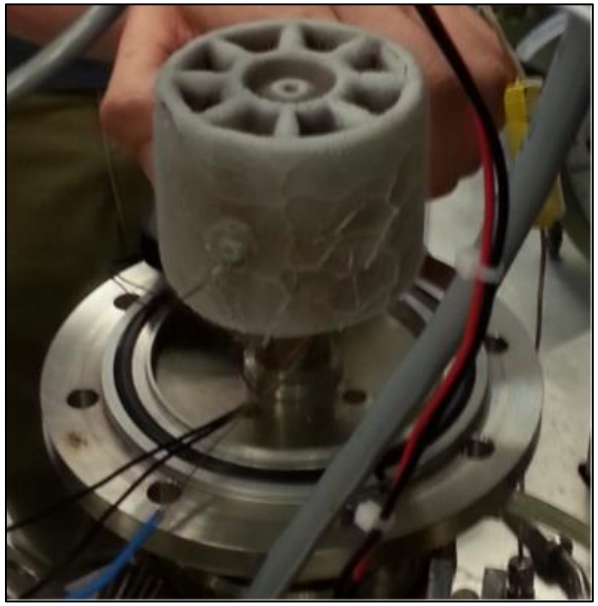

Dry ice and water ice frost accumulation on the Ferris Wheel cold head (T = 1.4 h)

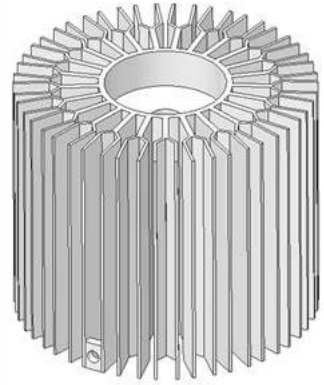

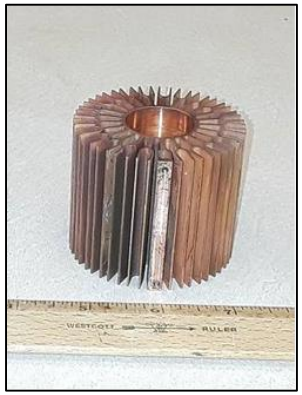

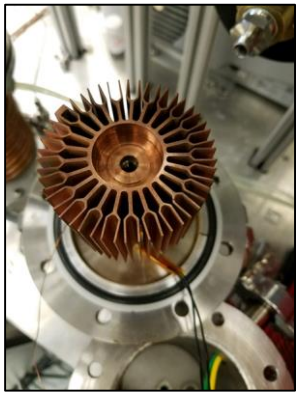

CAD drawing of the "Tuning Fork" cold head w/25 fins, EDM machined version, & unit installed on cryocooler

# Flow-Considered Steady-State Model Predictions

- **Ferris Wheel model**
  - Did not completely fill in channels
  - Little dry ice at attachment screw
  - Very thin layer on outer walls
- **Branching model**
  - Did fill in channels
  - Little dry ice on top
  - Thin layer on outer walls

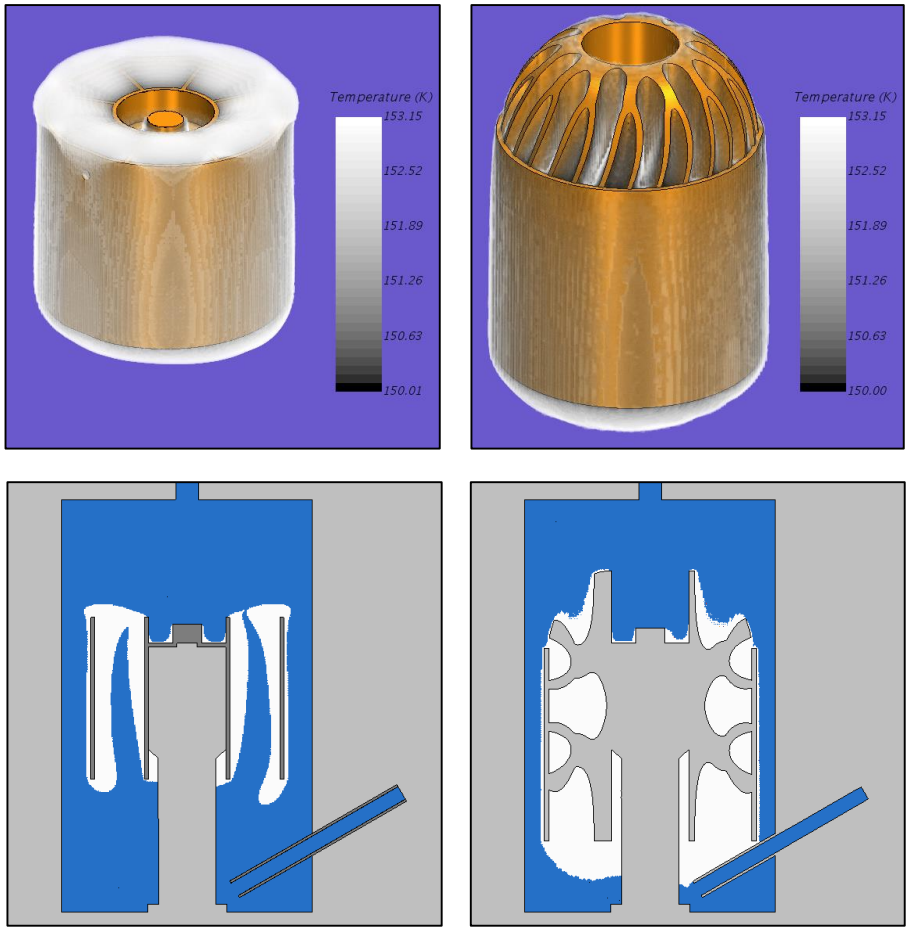


Drawings of the Ferris Wheel cold head (left) and the Branching design (right) with predicted dry ice accumulations at steady-state

# No-Flow-Considered Steady-State Model Predictions

- **Ferris Wheel model**
  - Did completely fill in channels
  - Heavy dry ice at attachment screw
  - Thicker layer on outer walls
- **Branching model**
  - Did fill in channels
  - Thick dry ice on top
  - Thin layer on outer walls

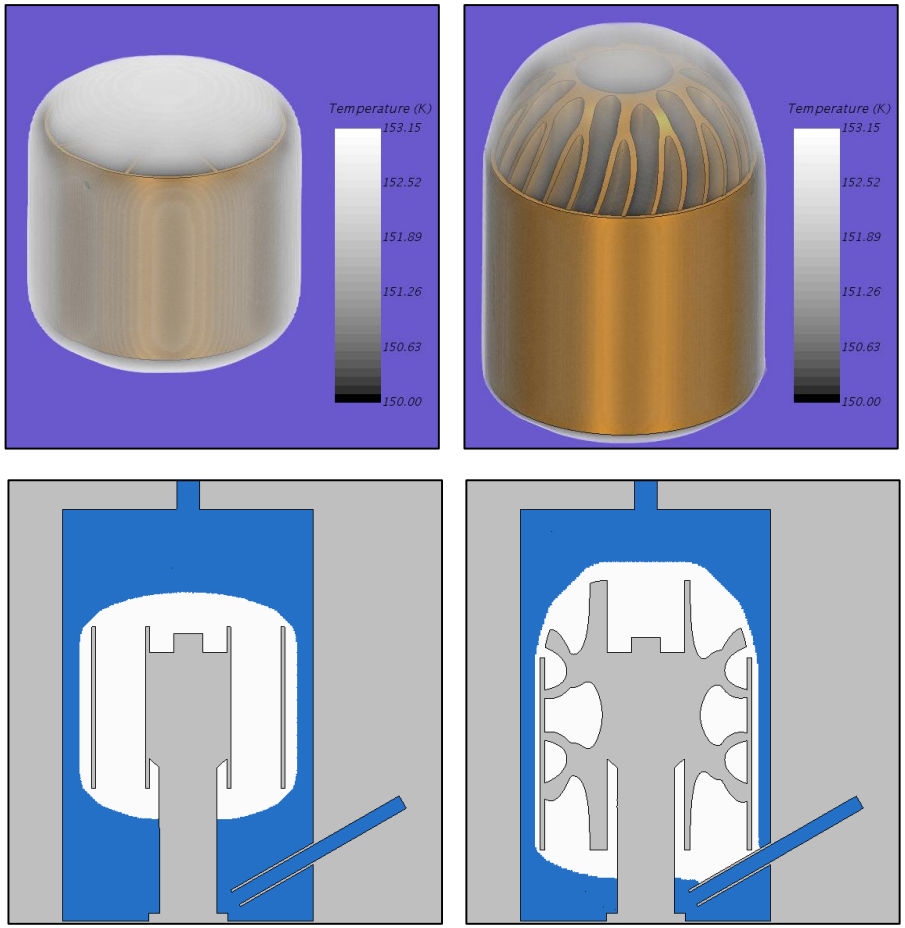


Drawings of the Ferris Wheel cold head (left) and the Branching design (right) with predicted dry ice accumulations at steady-state

# Comparison of Predicted and Actual Dry Ice Mass at Steady State for Cold Head Designs

| Property or Simulation Type | Ferris Wheel, g | Branching, g | Branching (Lattice), g |
|---|---|---|---|
| Mass | 265 g | NA | 843 g |
| Cooling Time to 150 K | 8.5 min | NA | 45 min |
| Flow-Considered | 207 g | 296 g | 312 g |
| No-Flow- Considered | 339 g | 388 g | 404 g |
| Experimental Results | 406 g (7.0 h) | NA | 502 g (6.33 h) |

- Model is better for cold head *comparisons* vs. explicit predictions for an individual design
- Improvements between the Branching and the Ferris Wheel designs are on the order of 15 – 50%
  - Actual improvement lies between these two extremes
- *Rate* of accumulation may be estimated by normalizing the results when compared to completed steady-state experimental runs

# Cold Head Performance Optimization

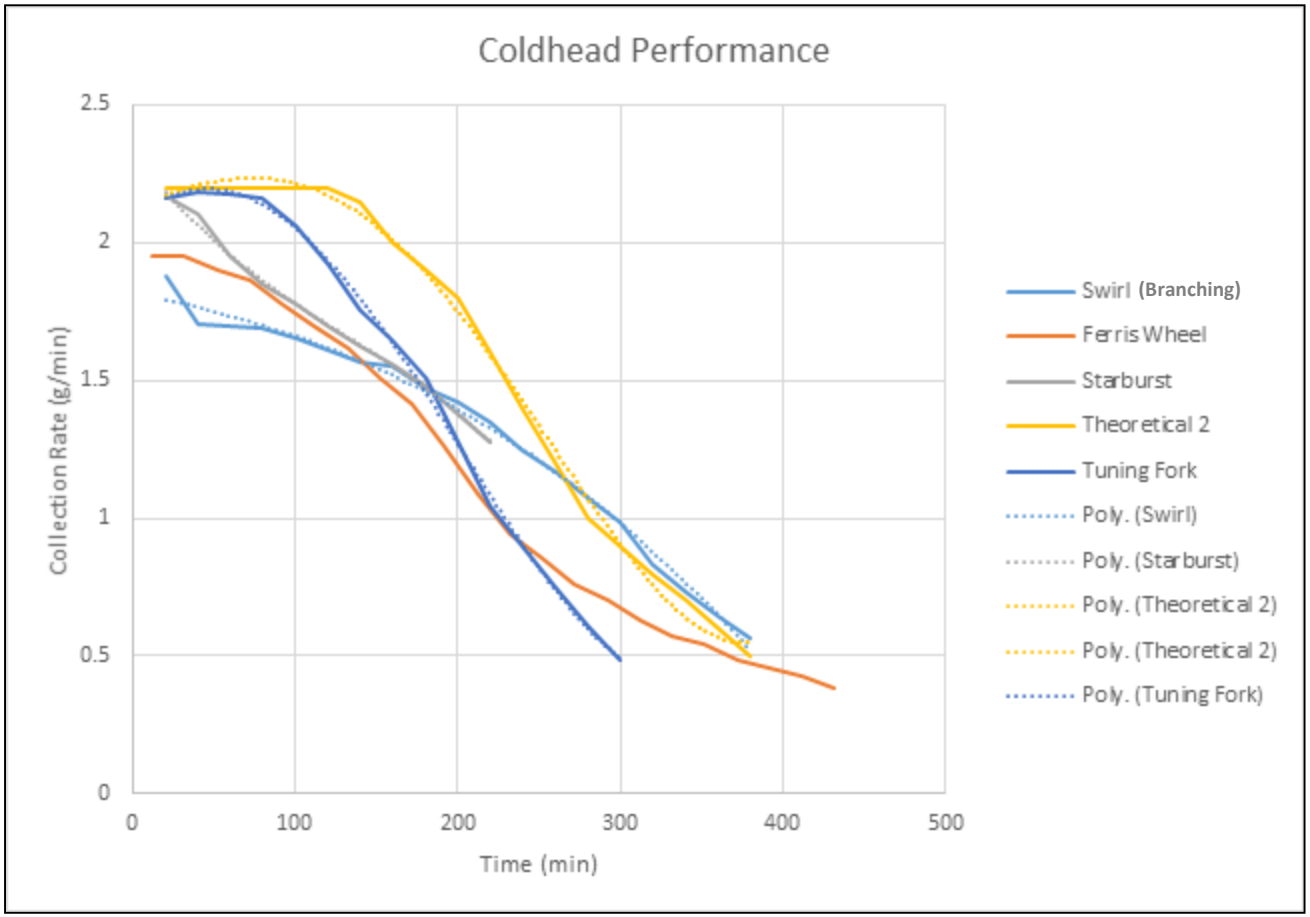


- $CO_2$ Performance Comparison – Test Results vs. "Theoretical Cold Head"
  - Initial Tuning Fork freezing rate closest to hypothetical "Theoretical 2" rate
  - Exceeded 110 g/h for 120 min; averaged 90 g/h for 5 h

# Cold Head Performance Optimization (Cont.)

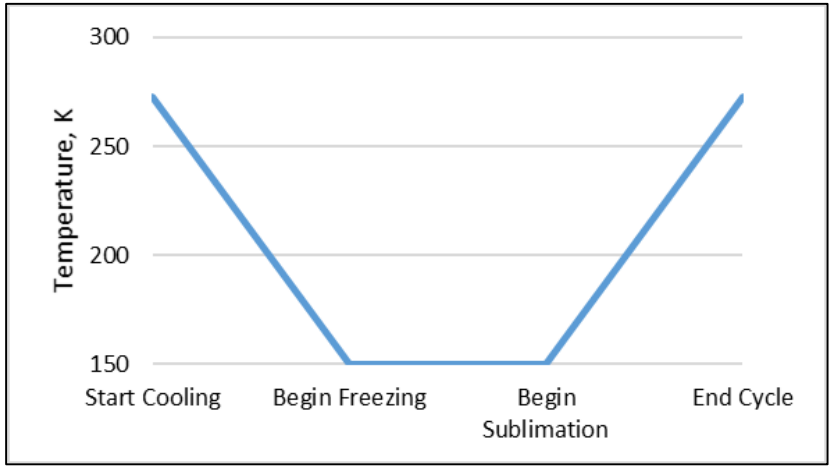


- **Cycle Performance Comparison**
- **Ideal cycle time for the Tuning Fork is 173 min**
  - **80.5 min actual freezing time**
  - **Average collection rate = 41.0 g/h**
  - **Pair of cryocoolers = 82 g/h**

- **$CO_2$ collection cycle overview**
- **Optimization:**
  - **Minimize cool down time (reduce mass, maximize thermal conductivity)**
  - **Maximize freezing rate (increase area, maximize thermal conductivity)**
  - **Sublimation rate (supply sufficient heat to close cycle time)**

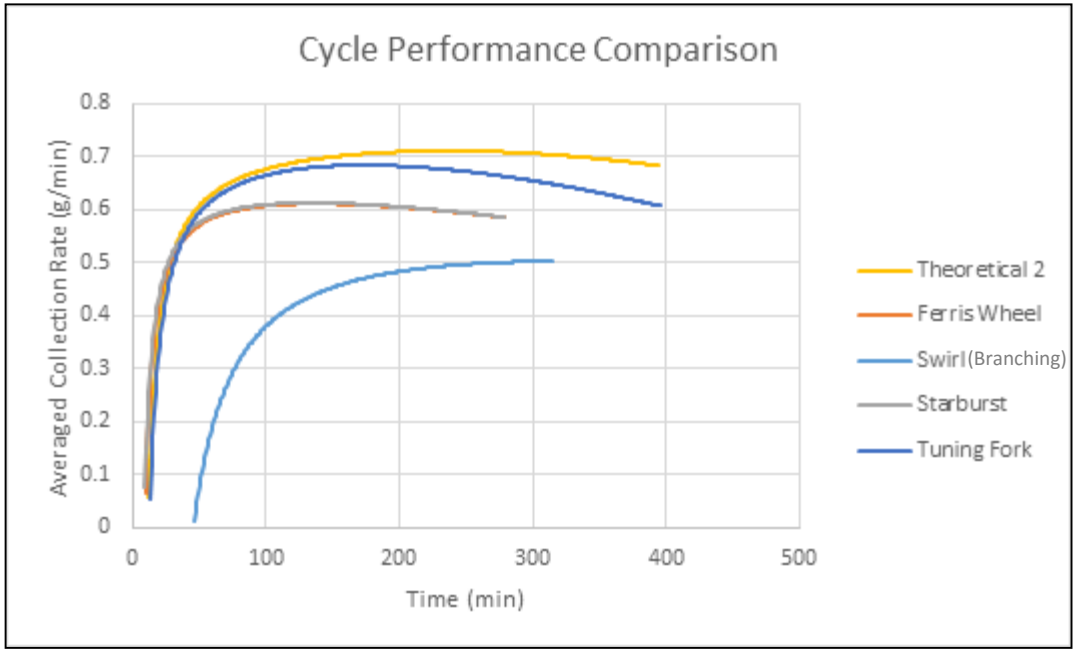

# Conclusions

- CAD models provided info for modeling
- Modeling of the $CO_2$ freezing process has provided great insight into ways to optimize the process
- Sabatier reactor modeling gives good agreement of predictions with test results
- Sabatier catalysts require protection from thermal shock
- Excellent progress has been made in preparing for designing full-scale $CO_2$ freezers and Sabatier reactors in FY18

# Acknowledgments


- Multiple NASA interns in addition to the coauthors
- Space Technology Mission Directorate (STMD) Game Changing Development (GCD), Next Generation Life Support (NGLS) funding
- KSC Continuing Technical Competence (CTC) and Independent Research and Technology Development (IR&TD) projects.
- We also especially thank Omar Mireles and Zachary Jones of MSFC for providing Additive Manufacturing cold heads

# Questions?
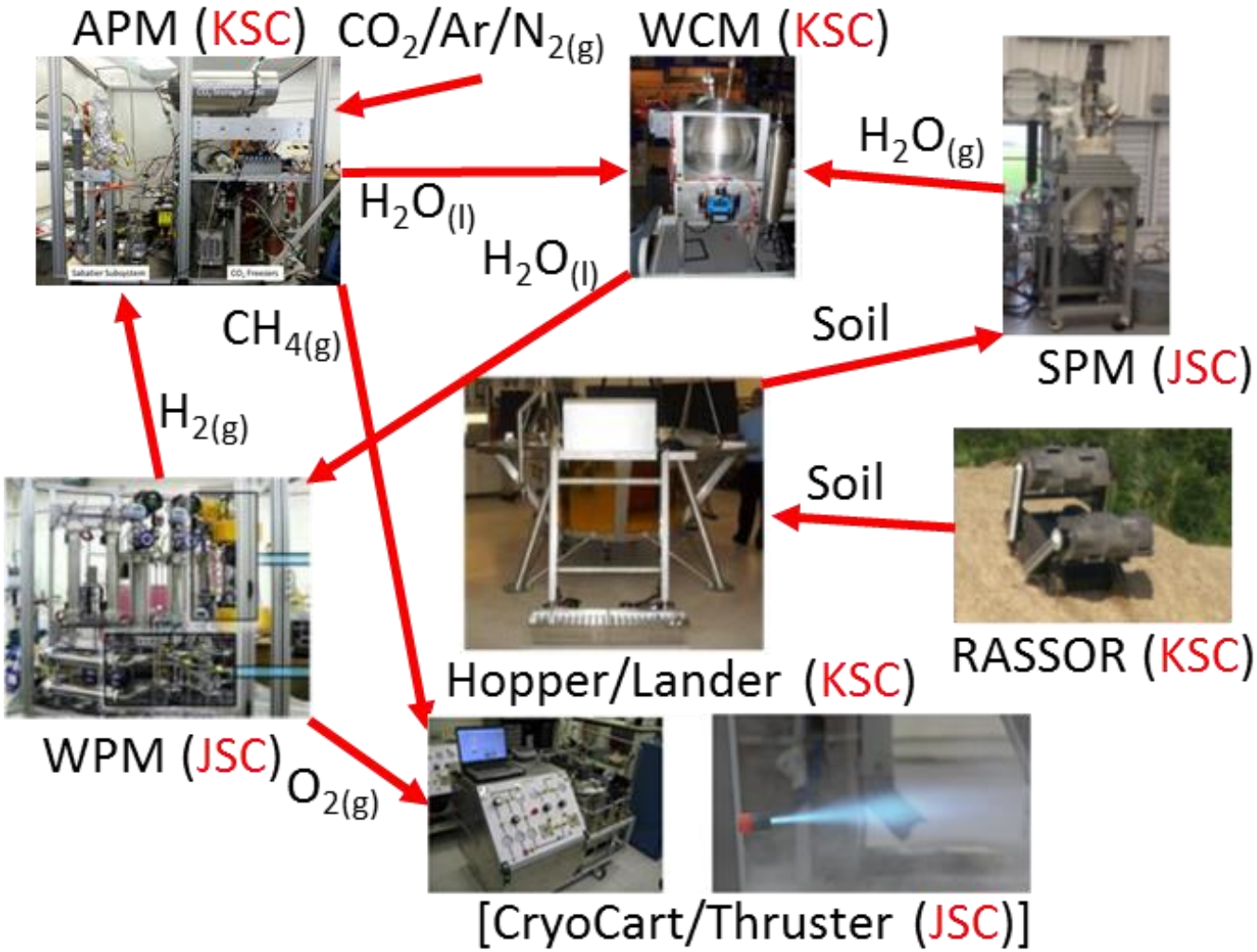
**MARCO POLO/Mars ISRU Pathfinder Modules**